R-1452

AD 742744

DAVIDSON LABORATORY

Report SIT-DL-70-1452

February 1970

MATHEMATICAL FORMULATION OF WHEELED VEHICLE DYNAMICS FOR HYBRID COMPUTER SIMULATION

by

M. Peter Jurkat

Prepared for

U. S. Army Tank-Automotive Command
38111 Van Dyke Avenue
Warren, Michigan

under

Contract DAAE07-69-C-0356
(THEMIS Project)

DISTRIBUTION STATEMENT

This document has been approved for public release [illegible]

STEVENS INSTITUTE OF TECHNOLOGY
CASTLE POINT STATION
HOBOKEN, NEW JERSEY 07030

Reproduced by
NATIONAL TECHNICAL
INFORMATION SERVICE
Springfield [illegible]

(c)

R-1452

UNCLASSIFIED
Security Classification

DOCUMENT CONTROL DATA - R & D

Security classification of title, body of abstract and indexing annotation must be entered when the overall report is classified)

1. ORIGINATING ACTIVITY (Corporate author) Davidson Laboratory Stevens Institute of Technology, Hoboken, N. J. 07030	2a. REPORT SECURITY CLASSIFICATION Unclassified 2b. GROUP

3. REPORT TITLE

MATHEMATICAL FORMULATION OF WHEELED VEHICLE DYNAMICS FOR HYBRID COMPUTER SIMULATION

4. DESCRIPTIVE NOTES (Type of report and inclusive dates)
Final Report.

5. AUTHOR(S) (First name, middle initial, last name)

M. Peter Jurkat

6. REPORT DATE February 1970	7a. TOTAL NO. OF PAGES 69	7b. NO. OF REFS 2
8a. CONTRACT OR GRANT NO. DAAE07-69-C-0356 b. PROJECT NO. c. d.	9a. ORIGINATOR'S REPORT NUMBER(S) SIT-DL-70-1452 9b. OTHER REPORT NO(S) (Any other numbers that may be assigned this report)	

10. DISTRIBUTION STATEMENT This document has been approved for public release and sale; its distribution is unlimited. [redacted]

11. SUPPLEMENTARY NOTES	12. SPONSORING MILITARY ACTIVITY U. S. Army Tank-Automotive Command 38111 Van Dyke Avenue Warren, Michigan 48090

13. ABSTRACT

This report contains the mathematical equations of motion required to construct a hybrid model simulation of a vehicle operating on rigid terrain. They are grouped roughly by vehicle components: sprung mass, unsprung mass, suspension, drive train/brakes, wheels and tires. Equations representing both the double A-arm and the solid axle suspension system and two different tire models (one assuming the "friction circle" and the other the "friction ellipse" concept of total tire force) are included.

DD FORM 1 NOV 65 1473 (PAGE 1)
S/N 0101-807-6811

UNCLASSIFIED
Security Classification

UNCLASSIFIED

Security Classification

14. KEY WORDS	LINK A ROLE	LINK A WT	LINK B ROLE	LINK B WT	LINK C ROLE	LINK C WT
Vehicle Dynamics						
Vehicle Simulation						
Mathematical Modeling						

DD FORM 1 NOV 65 1473 (BACK)

S/N 0101-807-6821

UNCLASSIFIED

Security Classification

A-31403

DAVIDSON LABORATORY
Stevens Institute of Technology
Castle Point Station
Hoboken, New Jersey 07030

Report SIT-DL-70-1452

February 1970

MATHEMATICAL FORMULATION OF WHEELED VEHICLE DYNAMICS FOR HYBRID COMPUTER SIMULATION

by

M. Peter Jurkat

prepared for
United States Army Tank-Automotive Command
38111 Van Dyke Avenue
Warren, Michigan

under
Contract DAAE07-69-C-0356
(THEMIS Project)
DL Project 3515/407

This document has been approved for public release and sale; its distribution is unlimited.

Approved

I. Robert Ehrlich, Manager
Transportation Research Group

ABSTRACT

This report contains the mathematical equations of motion required to construct a hybrid model simulation of a vehicle operating on rigid terrain. They are grouped roughly by vehicle components: sprung mass, unsprung mass, suspension, drive train/brakes, wheels and tires. Equations representing both the double A-arm and the solid axle suspension system and two different tire models (one assuming the "friction circle" and the other the "friction ellipse" concept of total tire force) are included.

Keywords

Vehicle Dynamics
Vehicle Simulation
Mathematical Modeling

CONTENTS

Abstract	iii
INTRODUCTION	1
DISCUSSION	3
REFERENCES	7
FIGURES 1-3	9-11
APPENDIX A	13
APPENDIX B	19
APPENDIX C	29
APPENDIX D	39
APPENDIX E	55

INTRODUCTION

This report presents a mathematical model of a vehicle operating on rigid terrain. The equations of motion are so written and organized as to be readily adaptable to a hybrid computer simulation. This model relies heavily on the digital simulation model recently presented by McHenry-Deleys[1] and in fact, is little more than a transcription of it, stripped of its vehicle barrier impact routine and reorganized to allow its implementation on a hybrid digital-analog computer. For ease of use, the equations are grouped by routines which attempt to distinguish between suspension design dependent and suspension design independent calculations and further to distinguish among various vehicle components. Specifically, the sprung mass, unsprung masses, wheel and suspension, driving or braking torques, and tire reactions are each treated separately. No attempt is made to simulate the steering system. For descriptive purposes, it is assumed that a four-wheeled, two-axle vehicle is being simulated. The simulation may be run either in a 10 degrees-of-freedom or a 14 degrees-of-freedom mode, depending on whether the rotational velocities of the wheels are included. The 10 degrees-of-freedom mode includes six for the sprung mass (surge, sway, heave, roll, pitch and yaw) and two for each axle. When the rotational velocities of the wheels are to be included, four more degrees of freedom are added. The 14 degrees-of-freedom case makes it possible to calculate the circumferential slip of the tires, and therefore allows the use of a more complete tire model.

Two tire models are included in this report: one incorporating the "friction circle" concept of total tire force for use when the wheel rotational velocities are not simulated, and another, a more general tire model, incorporating the "friction ellipse" concept for the simulation of wheel rotation.

Equations which represent both the double A-arm and the solid axle suspension system are presented here. Equations representing other suspension systems are presently under development and will be presented in future reports.

DISCUSSION

Since this report is mainly a presentation of the pertinent equations of motion, no attempt will be made to discuss completely their derivation. For this, including the rationale behind many of the assumptions used, the reader is referred to the report by McHenry and Deleys.[1] The following, therefore, represents only a brief description and guide to the various systems of equations presented in this report.

Figures 1 and 2 are copies of Figures 4.1 and 7.12 of the McHenry-Deleys report. They show the location and relationship between the coordinate systems and the various degrees of freedom of a vehicle with double A-arms in front and a solid axle in the rear. For swing axle and trailing link suspensions, which are to be implemented in this model at a later time, the degrees of freedom will be somewhat different.

Figure 3 is a flow chart showing the individual routines which are to be the elements of the model. Modifications to the vehicles being simulated may be done by substituting routines in their entirety. It will be noticed that the data flow of the routines numbered 1, 2, and 3 forms a closed loop. These three routines, or the major portions of them are designed to be programmed on the analog portion of the hybrid computer. Routines 1 and 4 comprise the bulk of the model and are so constructed as to be independent of suspension or axle configuration. Routine 5 is also design independent, requiring only the knowledge of the number of wheels on the vehicle. Routines 2, 3, 6, and 8-12 are dependent on suspension design. Routine 7 is the tire/wheel-soil interaction equations. In this report, the "soil" is pavement whose only characteristic is frictional. For off-road soft soil studies, this routine could be replaced by load-sinkage and drag relationships such as found in Schuring and Belsdorf.[2]

The organization of the model, as indicated in Figure 3, is the basic reason for this report, since the contents of the individual equations can be found in the McHenry-Deleys report. This new organization will allow

Preceding page blank

for easy vehicle design changes, including a variety of front and rear end suspensions, and an arbitrary number of axles, wheels per axle, and axle suspension designs. This model may also be used as the basic model to simulate amphibians entering and exiting from streams by the addition of buoyancy equations. Intact, the present model can be utilized for vehicle ride evaluation on rough, off-highway operations and its computer output could be used to drive a seat simulator.

Appendix A presents the symbols and notation used in this report, along with a brief verbal description of the modeled quantities themselves. The exact procedure for measuring the parameters on any one vehicle can be inferred from these descriptions, and they will be discussed in companion reports.

Appendix B presents equations of motions of the sprung mass and the unsprung mass calculations which are independent of suspension and axle design. The equations contained in this appendix constitute the bulk of the model and are not intended to be changed when different vehicles are simulated.

Appendix C presents the wheel and tire equations. Three routines are included in this section:

1. A tire model which uses the assumption that the magnitude of the maximum tire force (the resultant of the circumferential and lateral forces) is constant. This is the so-called "friction-circle" tire force model.

2. A set of differential equations which describe the rotational motion of the wheels.

3. A tire model for use with the equations for the rotational motion of the wheels which assumes that the maximum tire force is dependent on direction. This is the so-called "friction ellipse" tire force model.

In any one simulation, either the first routine is used by itself, or the last two are used together. In the former case the model has 10 degrees-of-freedom; in the latter, 14.

Appendix D presents all the routines which model a solid axle suspension; each routine includes equations which implement the solid axle as if it were either a front or a rear axle. It may be seen that the form of the equations does not differ between front and rear. Only the values of the parameters changes. This fact allows the use of the model in the modular manner described above. For a solid axle it is assumed that the unsprung center of gravity is at the center of the differential and the axle moves in a plane perpendicular to the vehicle forward axis such that it pivots about a point which moves parallel to the vehicle vertical axis.

Appendix E presents the routines which model a double A-arm suspended "axle." Here the assumptions are that the wheel centers are the unsprung CG's and move in a line parallel to the vehicle vertical axis.

REFERENCES

1. McHENRY, RAYMOND R., AND DELEYS, NORMAN J., "Vehicle Dynamics in Single Vehicle Accidents, Validation and Extensions of a Computer Simulation, Cornell Aeronautical Laboratory Technical Report No. VJ-2251-V-3, December 1968.

2. SCHURING, D. AND BELSDORF, M.R., "Analysis and Simulation of Dynamical Vehicle-Terrain Interaction," Cornell Aeronautical Laboratory Technical Memorandum CAL No. VJ-2330-G-56, May 1969.

Preceding page blank

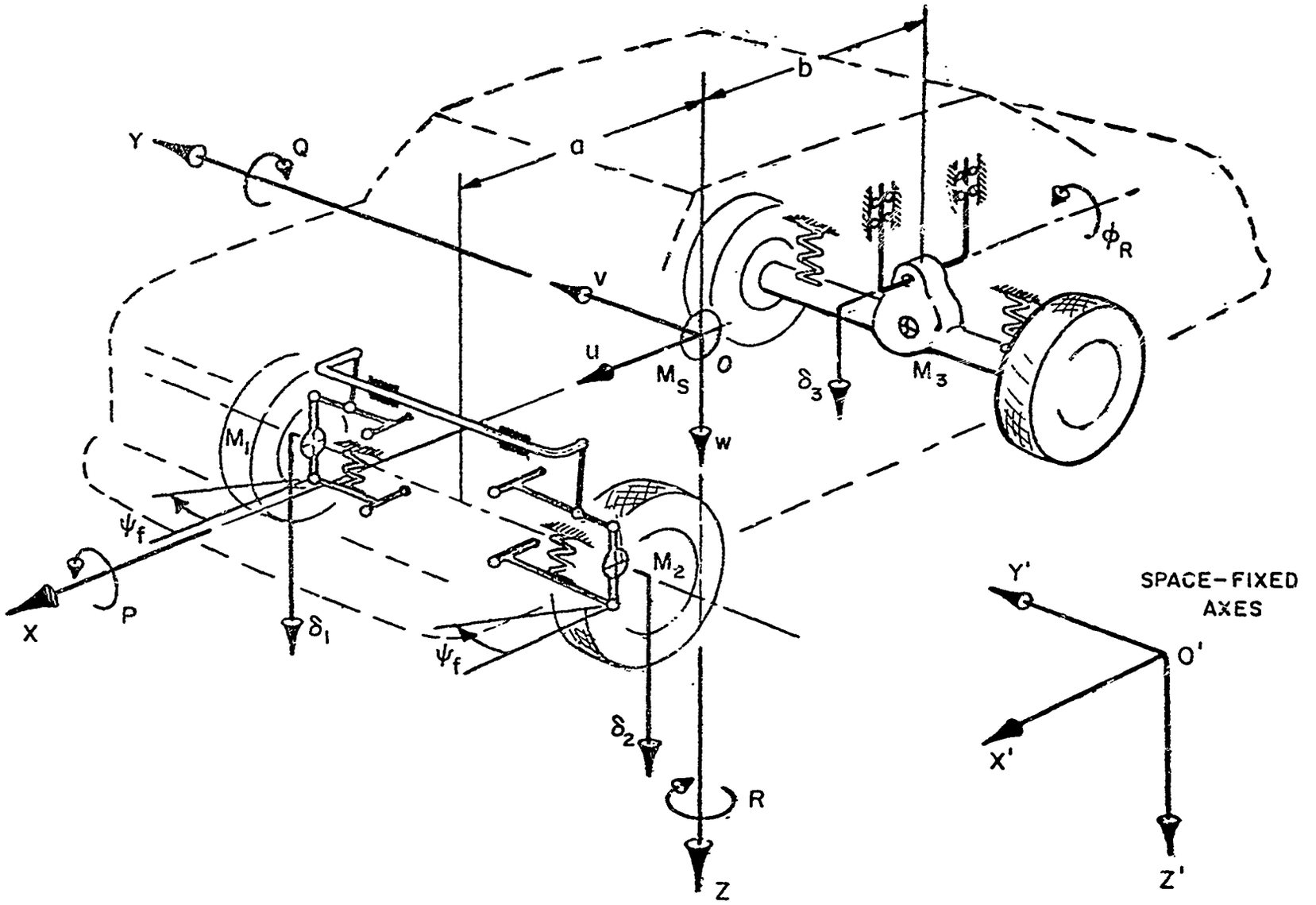

FIG. I. ANALYTICAL REPRESENTATION OF VEHICLE FROM McHENRY-DELEY'S

Preceding page blank

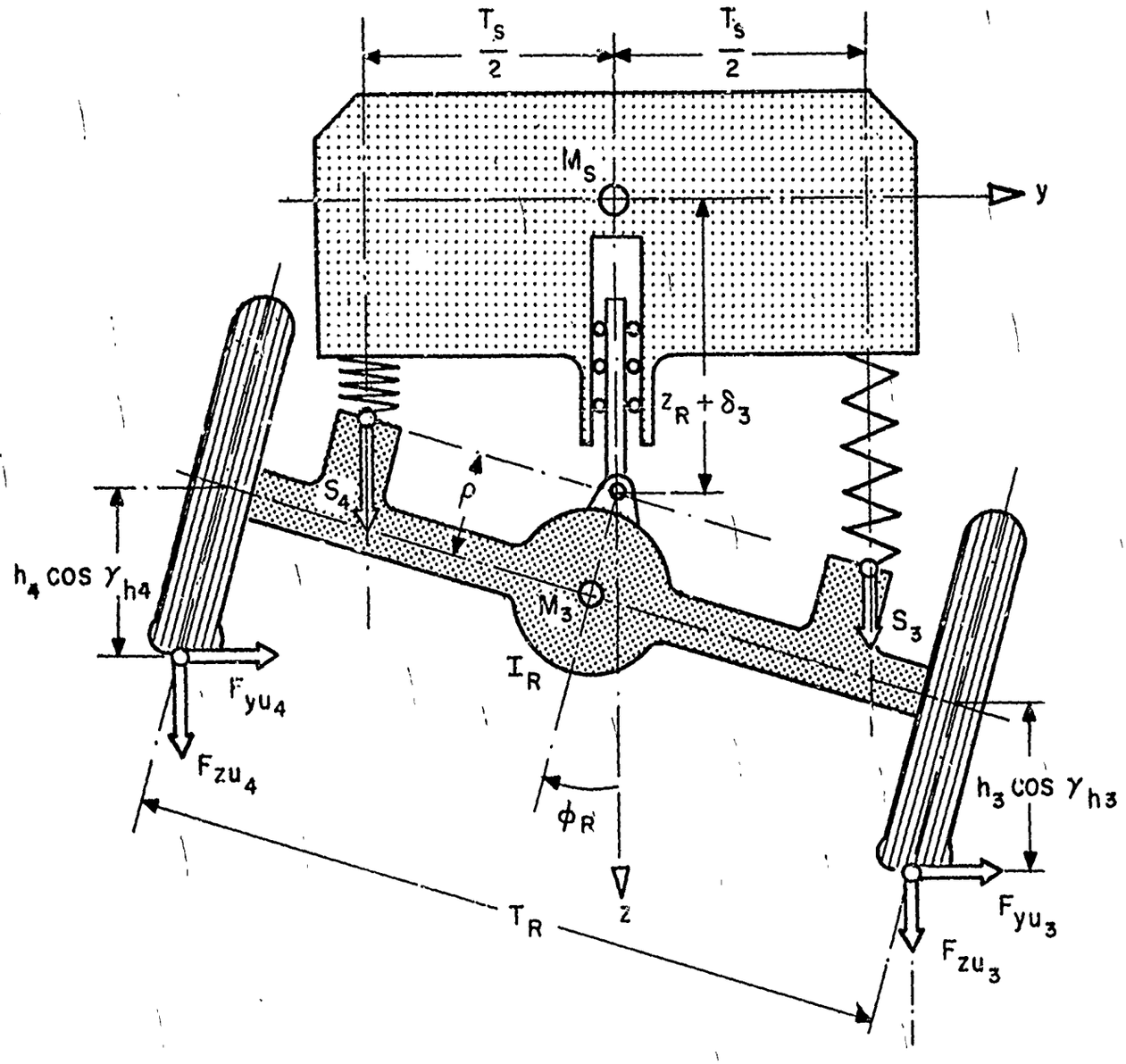

FIG. 2. REAR AXLE REPRESENTATION FROM McHENRY-DELEY'S

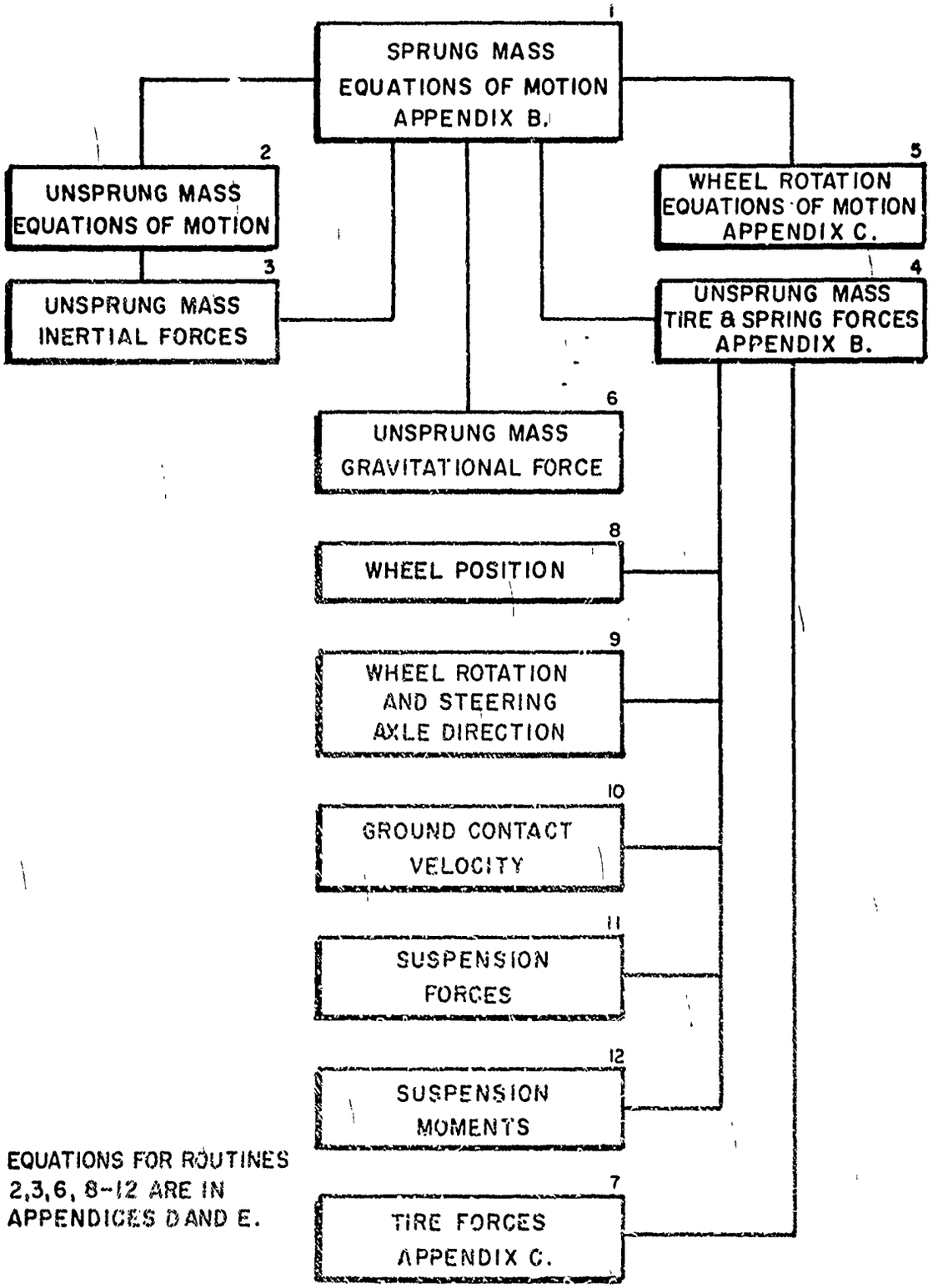

FIG. 3. OVERALL PROGRAM ORGANIZATION

Appendix A

Nomenclature

Nomenclature

The notation* used in this report is mostly that used by McHenry-Deleys[1].

Subscripts

F = front

R = rear

1 = right front or front pivot center

2 = left front

3 = right rear or rear pivot center

4 = left rear

s = sprung mass or tire lateral direction

u = unsprung mass

G = ground

w = wheels

r = tire radial direction

c = vehicle CG or tire circumferential direction

o = initial values

Primed variables represent quantities measured in the space-fixed coordinate system. Quantities measured in the vehicle coordinate system are unprimed and will generally have subscripts indicating their reference axis. Dotted variables represent qualities differentiated with respect to time. The notation F/R means front or rear, whichever applies.

*Like all conventions, these are various exceptions. These have been carefully annotated.

Degrees of Freedom

Sprung Mass

u = velocity along vehicle x-axis

v = velocity along vehicle y-axis

w = velocity along vehicle z-axis

P = roll velocity about vehicle x-axis

Q = pitch velocity about vehicle y-axis

R = yaw velocity about vehicle z-axis

Unsprung Mass - Double A-Arm

δ_i = vertical deflection of wheel center from rest position (i = 1,2,3,4).

It is assumed that the CG of unsprung mass is at the individual wheel centers and their motion is parallel to the vehicle z-axis.

Unsprung Mass - Solid Axle

δ_i = vertical deflection of axle pivot point (i = 1,3)

$\varphi_{F/R}$ = axle roll angle about its pivot point

It is assumed that the CG of the unsprung mass is at the center of the axle and it and the actual pivot point are both in the vehicle xz-plane when the vehicle is at rest. The pivot point is constrained to move parallel to the vehicle z-axis and the entire axle can roll about it parallel to the yz-plane. In any combination the simulation has 10 degrees of freedom: six body motions and four suspension motions (two for each axle). Four additional degrees of freedom may be added as:

Wheels

$\dot{\theta}_i = (PRS)_i$ = rotational velocity of wheel i - positive for forward rolling.

Rotational velocity of wheels can be added as an additional four degrees of freedom. If they are included, use friction ellipse tire force routine; if not, use friction circle.

Motion Variables

t = time

φ, θ, ψ = Euler angles of motion of the sprung mass relative to the space-fixed coordinate system. If the vehicle and space-fixed axes initially coincide then the rotation is first ψ radians about z'-axis, then θ radian about new vehicle y-axis, and finally φ radians about final vehicle x-axis.

A = transformation matrix for transformation from coordinates fixed in sprung mass to coordinates fixed in space.

N.B.: $A^{-1} = A^T$

(u', v', w') = velocity of sprung mass CG wrt space-fixed system

$$\left.\begin{array}{l}(\cos\alpha_x\ ,\ \cos\beta_x\ ,\ \cos\gamma_x)\\(\cos\alpha_y\ ,\ \cos\beta_y\ ,\ \cos\gamma_y)\end{array}\right\} = \text{direction cosines of vehicle x- and y-axis in space-fixed system}$$

$(x_i'\ ,\ y_i'\ ,\ z_i')$ = space-fixed coords of wheel center i

$(\cos\alpha_{Gz'i}\ ,\ \cos\beta_{Gz'i}\ ,\ \cos\gamma_{Gz'i})$ = direction cosines of ground plane normal under wheel i

φ_i = camber angle of wheel i wrt vehicle coords

φ_{CGi} = camber angle of wheel i wrt local ground plane

ψ_i = steer angle of wheel i wrt vehicle coords

ψ_i' = steer angle of wheel i wrt local ground plane

$(\cos\alpha_{ywi}\ ,\ \cos\beta_{ywi}\ ,\ \cos\gamma_{ywi})$ = direction cosines of rolling axle of wheel i wrt space-fixed system

$(\cos\alpha_{zwi}\ ,\ \cos\beta_{zwi}\ ,\ \cos\gamma_{zwi})$ = direction cosines of steer axis of wheel i wrt space-fixed system

$(x_{GPi}'\ ,\ y_{GPi}'\ ,\ z_{GPi}')$ = coords of ground contact "point" under wheel i wrt space-fixed system

h_i = rolling radius of wheel i

$(\cos\alpha_{hi}\ ,\ \cos\beta_{hi}\ ,\ \cos\gamma_{hi})$ = direction cosines of line connecting ground contact point and wheel center i wrt space-fixed axis - this is radial tire force direction

$(\cos\alpha_{ci}, \cos\beta_{ci}, \cos\gamma_{ci})$ = direction cosines of tire circumferential force for wheel i wrt space-fixed system

$(\cos\alpha_{si}, \cos\beta_{si}, \cos\gamma_{si})$ = direction cosines of tire lateral force for wheel i wrt space-fixed system

u_{Gi} = forward velocity of wheel center i parallel to tire terrain contact plane

v_{Gi} = lateral velocity of wheel contact point i parallel to tire terrain contact plane

It is assumed that the entire area which can be reached by a tire (when its wheel center is at an arbitrary location) can be generalized to a plane.

F_{si} = tire lateral force along $(\cos\alpha_{si}, \cos\beta_{si}, \cos\gamma_{si})$ at tire contact point

F_{ci} = tire circumferential force along $(\cos\alpha_{ci}, \cos\beta_{ci}, \cos\gamma_{ci})$ at tire contact point

F_{Ri}' = tire radial force normal to ground plane

(u_i, v_i, w_i) = velocity of wheel center in vehicle coords

S_i = suspension force of unsprung mass i

$(F_{xui}, F_{yui}, F_{zui})$ = component of suspension and tire forces in vehicle coordinate systems

$(N_{\varphi ui}, N_{\theta ui}, N_{\psi ui})$ = components of suspension and tire force moments in vehicle coordinate system

$\left.\begin{array}{l}(G_{xui}, G_{yui}, G_{zui}) \\ (I_{xui}, I_{yui}, I_{zui})\end{array}\right\}$ = forces and moments due to inertia of unsprung masses applied to sprung mass in veh coord system

<u>Input</u>

t_o

(u_o, v_o, w_o)

(P_o, Q_o, R_o)

$(\varphi_o, \theta_o, \psi_o)$

(x_o', y_o', z_o')

δ_{io} and/or $\varphi_{Fo/Ro}$

δ_{io} and/or $\dot{\varphi}_{Fo/Ro}$

$z_G'(x',y')$ = ground elevation at (x',y')

$\varphi_G(x',y')$, $\theta_G(x',y')$ = Euler angle coords of terrain profile

$\overline{TQ_F(t)}$, $\overline{TQ_R(t)}$ = input torque to front or rear drive shaft

$\psi(t)$ = central steer angle for steering angle

Vehicle Parameters

M_s = sprung mass

g = acc of gravity

I_x , I_y , I_z , I_{xz} = moments and cross-product of inertia

a = distance along veh x-axis: CG to front axle

b = distance along veh x-axis: CG to rear axle

$T_{F/R}$ = front and/or rear track at rest

$z_{F/R}$ = distance at rest along veh z-axis: CG to wheel centers (double A-arm)
: CG to axle pivot point (solid)

M_i = unsprung mass: each suspension plus wheel (double A-arm) i = 1,2,3,4
: entire axle plus wheels (solid) i = 1,3

$C_{F/R}'$ = Coulomb damping for single wheel: at wheel center (double A-arm)

$\epsilon_{F/R}$ = Coulomb damping friction lag

$K_{F/R}$ = suspension load deflection rate for small deflections: at wheel center (double A-arm); at spring hanger (solid)

$\Omega_{F/R}$ = suspension deflection limit at which $K_{F/R}$ no longer describes the suspension load deflection rate

$C_{F/R}$ = viscous damping coeff for single wheel: at wheel (double A-arm)
: at spring (solid)

$\lambda_{F/R}$ = multiple of $K_{F/R}$ beyond $\Omega_{F/R}$

$R_{F/R}$ = auxiliary roll stiffness: at wheel (double A-arm)
: at spring (solid)

$T_{SF/R}$ = distance between springs for solid axle

$\psi(\delta)$ = deflection steer of double A-arms when non-steering axle

$K_{S\varphi/R}$ = camber steer coeff for solid axle when non-steering axle

$\varphi(\delta)$ = camber angle of deflected wheel for double A-arm

$\rho_{F/R}$ = distance from pivot point to CG of solid axle, positive for pivot point above CG

$I_{F/R}$ = moment of inertia of solid axle about a line parallel to veh x-axis through axle CG

Tire and Wheel Parameters

R_w = undeflected wheel radius

K_T = radial deflection stiffness for small deflections (lb/in)

σ_T = deflection at which K_T no longer describes deflection stiffness (in)

λ_T = multiple of K_T for deflections greater than σ_T

$\overline{AR}_{F/R}$ = drive axle ratio = speed ratio of $\frac{\text{drive shaft}}{\text{wheel}}$ for driven axle
= 1 for non-driven axle

$I_{wF/R}$ = rotational inertia of each wheel

$I_{DF/R}$ = drive line inertia

μ = locked wheel coefficient of friction for use in "friction circle" tire model

μ_i = locked wheel lateral coefficient of friction for use in "friction ellipse" tire model

$A_o,\ldots,A_4,\sigma_T$ = tire constants relating lateral force due to lateral slip and camber thrust to normal load.

Appendix B

Sprung Mass Routine - Main Program

Unsprung Mass Tire and Spring Forces Control Routine

<u>Sprung Mass Routine</u> (Main)

<u>Initial Conditions</u>: u_o , v_o , w_o , P_o , Q_o , R_o
x_o' , y_o' , z_o' , φ_o, θ_o, ψ_o
$\dot{\delta}_{io}$, δ_{io} and/or $\dot{\varphi}_{Ro}$, φ_{Ro}
$\dot{\theta}_{io}$

<u>Parameters</u>: M_S , g , I_x , I_y , I_z , I_{xz}

<u>Equations</u>:

$$u = \int_o^t \dot{u}\, dt \qquad \text{I.C.} = \begin{pmatrix} u_o \\ v_o \\ w_o \end{pmatrix}$$

$$v = \int_o^t \dot{v}\, dt$$

$$w = \int_o^t \dot{w}\, dt$$

$$P = \int_o^t \dot{P}\, dt \qquad \text{I.C.} = \begin{pmatrix} P_o \\ Q_o \\ R_o \end{pmatrix}$$

$$Q = \int_o^t \dot{Q}\, dt$$

$$R = \int_o^t \dot{R}\, dt$$

$$\dot{\delta}_i = \int_o^t \ddot{\delta}_i\, dt \qquad \text{I.C.} = \dot{\delta}_{io}$$

$$\delta_i = \int_o^t \dot{\delta}_i\, dt \qquad \text{I.C.} = \delta_{io}$$

$$\theta = \int_0^t (Q \cos\varphi - R \sin\varphi)\, dt$$

$$\varphi = \int_0^t (P + Q \sin\varphi \tan\theta + R \cos\varphi \tan\theta)\, dt \qquad \text{I.C.} = \begin{pmatrix} \varphi_o \\ \theta_o \\ \psi_o \end{pmatrix}$$

$$\psi = \int_0^t (Q \sin\varphi + R \cos\varphi) \sec\theta\, dt$$

$$A = \begin{pmatrix} \cos\theta \cos\psi & -\cos\varphi \sin\psi + \sin\varphi \sin\theta \cos\psi & \sin\varphi \sin\psi + \cos\varphi \sin\theta \cos\psi \\ \cos\theta \sin\psi & \cos\varphi \cos\psi + \sin\varphi \sin\theta \sin\psi & -\sin\varphi \cos\psi + \cos\varphi \sin\theta \sin\psi \\ -\sin\theta & \cos\theta \sin\varphi & \cos\theta \cos\varphi \end{pmatrix}$$

Calculate A^T

$$\begin{pmatrix} u' \\ v' \\ w' \end{pmatrix} = A \begin{pmatrix} u \\ v \\ w \end{pmatrix}$$

$$x_c' = \int_0^t u'\, dt$$

$$y_c' = \int_0^t v'\, dt \qquad \text{I.C.} = \begin{pmatrix} x_o' \\ y_o' \\ z_o' \end{pmatrix}$$

$$z_c' = \int_0^t w'\, dt$$

$$\begin{pmatrix} \cos\alpha_x \\ \cos\beta_x \\ \cos\gamma_x \end{pmatrix} = A \begin{pmatrix} 1 \\ 0 \\ 0 \end{pmatrix}$$

$$\begin{pmatrix} \cos\alpha_y \\ \cos\beta_y \\ \cos\gamma_y \end{pmatrix} = A \begin{pmatrix} 0 \\ 1 \\ 0 \end{pmatrix}$$

calculate F_{xui} , F_{yui} , F_{zui} , S_i , $N_{\varphi ui}$, $N_{\theta ui}$, $N_{\psi ui}$ from

<u>Unsprung Mass Tire and Spring Force Control Routine</u>

$$\begin{pmatrix} G_{xs} \\ G_{ys} \\ G_{zs} \end{pmatrix} = g\, M_s A^T \begin{pmatrix} 0 \\ 0 \\ 1 \end{pmatrix}$$

calculate G_{xui} , G_{yui} , G_{zui} , $G_{\varphi ui}$, $G_{\theta ui}$, $G_{\psi ui}$ from

<u>Unsprung Mass Gravity Force Routine</u> $[A\ ,\ S_i]^*$

calculate I_{xui} , I_{yui} , I_{zui} , $I_{\varphi ui}$, $I_{\theta ui}$, $I_{\psi ui}$ from

<u>Unsprung Mass Inertial Forces Routine</u>

$$\begin{bmatrix} (u,v,w)\ ,\ (\dot{u},\dot{v},\dot{w})\ ,\ (P,Q,R)\ ,\ (\dot{P},\dot{Q},\dot{R})\ ,\ \delta_i\ ,\ \dot{\delta}_i \\ (\delta_i,\dot{\delta}_i) \text{ or } (\delta_{1/3}\ ,\ \varphi_{F/R}\ ,\ \delta_{1/3}\ ,\ \dot{\varphi}_{F/R}\ ,\ \ddot{\varphi}_{F/R}) \end{bmatrix}$$

$$M_S \left[\begin{pmatrix} \dot{u} \\ \dot{v} \\ \dot{w} \end{pmatrix} + \begin{pmatrix} P \\ Q \\ R \end{pmatrix} X \begin{pmatrix} u \\ v \\ w \end{pmatrix} \right] = \begin{pmatrix} \Sigma F_{xui} + \Sigma S_{xi} + \Sigma G_{xui} - \Sigma I_{xui} + G_{xs} \\ \Sigma F_{yui} + \Sigma S_{yi} + \Sigma G_{yui} - \Sigma I_{yui} + G_{ys} \\ \Sigma F_{zui} + \Sigma S_{zi} + \Sigma G_{zui} - \Sigma I_{zui} + G_{zs} \end{pmatrix}$$

$$\begin{pmatrix} I_x & 0 & -I_{xz} \\ 0 & I_y & 0 \\ -I_{xz} & 0 & I_z \end{pmatrix} \begin{pmatrix} \dot{P} \\ \dot{Q} \\ \dot{R} \end{pmatrix} + \begin{pmatrix} P \\ Q \\ R \end{pmatrix} X \begin{pmatrix} I_x & 0 & -I_{xz} \\ 0 & I_y & 0 \\ -I_{xz} & 0 & I_z \end{pmatrix} \begin{pmatrix} P \\ Q \\ R \end{pmatrix} = \begin{pmatrix} \Sigma F_{\varphi ui} + \Sigma G_{\varphi ui} + \Sigma I_{\varphi ui} \\ \Sigma F_{\theta ui} + \Sigma G_{\theta ui} + \Sigma I_{\theta ui} \\ \Sigma F_{\psi ui} + \Sigma G_{\psi ui} + \Sigma I_{\psi ui} \end{pmatrix}$$

*Variables in brackets are the inputs to the routine above them.

calculate $\ddot{\delta}_i$ and/or $\ddot{\varphi}_i$ from <u>Unsprung Mass Equa. of Mot. Routine</u>

$[(u,v, \ ),(\ , \ ,w),(P,Q,R),(\dot{P},\dot{Q}, \ )]$

calculate $\ddot{\theta}_i$ from <u>Wheel Rotation Equation of Motion Routine</u>

$[F_{ci},h_i]$

$$\dot{\theta}_i = \int_0^t \ddot{\theta}_i \, dt \qquad \dot{\theta}_{io} = \frac{u_{Gio} \cos\psi'_{io} + v_{Gio} \sin\psi'_{io}}{h_{io}}$$

Unsprung Mass Tire and Spring Forces Control Routine

Inputs: $\dot{\delta}_i, \delta_i$, (x_c', y_c', z_c') , A, A^T , (P, Q, R) , $(\cos\alpha_x, \cos\beta_x, \cos\gamma_x)$

$(\cos\alpha_y, \cos\beta_y, \cos\gamma_y)$, (u, v, w) , M_s

Outputs: F_{xui} , F_{yui} , F_{zui} , S_i

$N_{\varphi ui}$, $N_{\theta ui}$, $N_{\psi ui}$

Parameters: $z_G'(x', y')$, $\varphi_G(x', y')$, $\theta_G(x', y')$, R_w

NOTES:

1) All equations containing the subscript i are to be repeated for all wheels unless i is specifically restricted.

2) Whenever this routine calls for data concerning the wheels, the input to those routines will include two numbers for each axle: for solid axle: (δ_1, φ_F) or (δ_3, φ_R)

double A-arm: (δ_1, δ_2) or (δ_3, δ_4)

This means that the number of variables flowing from this routine to others will be the same, the variables themselves will differ.

EQUATIONS: Get (x_i, y_i, z_i) from Wheel Position Routine $[\delta_i, \varphi_i$ and/or $\varphi_{F/R}]$

$$\begin{pmatrix} x_i' \\ y_i' \\ z_i' \end{pmatrix} = \begin{pmatrix} x_c' \\ y_c' \\ z_c' \end{pmatrix} + A \begin{pmatrix} x_i \\ y_i \\ z_i \end{pmatrix}$$

Interpolate from the appropriate table:

$$z'_{Gi} = z'_G(x_i, y_i) \ , \ \varphi_{Gi} = \varphi_G(x'_i, y'_i) \ , \ \theta_G = \theta_G(x'_i, y'_i)$$

$$\begin{pmatrix} \cos\alpha_{Gz'i} \\ \cos\beta_{Gz'i} \\ \cos\gamma_{Gz'i} \end{pmatrix} = \begin{pmatrix} \cos\varphi_{Gi} \ \sin\theta_{Gi} \\ -\sin\varphi_{Gi} \\ \cos\varphi_{Gi} \ \cos\theta_{Gi} \end{pmatrix}$$

get $\psi, \dot{\varphi}_i$, $(-\cos\varphi_i \ \sin\psi_i \ , \ \cos\varphi_i \ \cos\psi_i \ , \ \sin\varphi_i)$ and

$(\sin\varphi_i \ \sin\psi_i \ , \ -\cos\psi_i \ \sin\varphi_i \ , \ \cos\varphi_i)$

from <u>Wheel Rotational Steering Axle Direction Routine</u> $[\delta_i, \varphi_i$ +/or $\varphi_{F/R}, t]$

$$\begin{pmatrix} \cos\alpha_{ywi} \\ \cos\beta_{ywi} \\ \cos\gamma_{ywi} \end{pmatrix} = A \begin{pmatrix} -\cos\varphi_i \ \sin\psi_i \\ \cos\varphi_i \ \cos\psi_i \\ \sin\varphi_i \end{pmatrix}$$

$$\varphi_{CGi} = \frac{\pi}{2} - \cos^{-1} [\cos\alpha_{ywi} \ \cos\alpha_{Gz'i} + \cos\beta_{ywi} \ \cos\beta_{Gz'i} + \cos\gamma_{ywi} \ \cos\gamma_{Gz'i}]$$

$$\begin{pmatrix} \cos\alpha_{zwi} \\ \cos\beta_{zwi} \\ \cos\gamma_{zwi} \end{pmatrix} = \begin{pmatrix} \sin\varphi_i \ \sin\psi_i \\ -\cos\psi_i \ \sin\varphi_i \\ \cos\varphi_i \end{pmatrix}$$

$$\psi'_i = \psi_i \ (\cos\alpha_{zwi} \ \cos \alpha_{Gz'i} + \cos\beta_{zwi} \ \cos \beta_{Gz'i} + \cos\gamma_{zwi} \ \cos\gamma_{Gz'i})$$

$$\begin{pmatrix} D_{1i} \\ D_{2i} \\ D_{3i} \end{pmatrix} = \begin{pmatrix} \cos\alpha_{ywi} \\ \cos\beta_{ywi} \\ \cos\gamma_{ywi} \end{pmatrix} \times \begin{pmatrix} \cos\alpha_{Gz'i} \\ \cos\beta_{Gz'i} \\ \cos\gamma_{Gz'i} \end{pmatrix}$$

$$C_i = \begin{pmatrix} \cos\alpha_{ywi} & \cos\beta_{ywi} & \cos\gamma_{ywi} \\ \cos\alpha_{Gz'i} & \cos\beta_{Gz'i} & \cos\gamma_{Gz'i} \\ D_{1i} & D_{2i} & D_{3i} \end{pmatrix}$$

$$\begin{pmatrix} x'_{GPi} \\ y'_{GPi} \\ z'_{GPi} \end{pmatrix} = C_i^{-1} \begin{pmatrix} x'_i \cos\alpha_{ywi} + y'_i \cos\beta_{ywi} + z'_i \cos\gamma_{ywi} \\ x'_i \cos\alpha_{Gz'i} + y'_i \cos\beta_{Gz'i} + z'_i \cos\gamma_{Gz'i} \\ x'_i D_{1i} + y'_i D_{2i} + z'_i D_{3i} \end{pmatrix}$$

$$\Delta_i = [(x'_i - x'_{GPi})^2 + (y'_i - y'_{GPi})^2 + (z'_i - z_{GPi})^2]^{1/2}$$

$$h_i = \min\{\Delta_i, R_w\}$$

$$\begin{pmatrix} \cos\alpha_{hi} \\ \cos\beta_{hi} \\ \cos\gamma_{hi} \end{pmatrix} = A^T \frac{1}{\Delta_i} \begin{pmatrix} x'_{GPi} - x'_i \\ y'_{GPi} - y'_i \\ z'_{GPi} - z'_i \end{pmatrix}$$

$$\begin{pmatrix} \cos\alpha_{ci} \\ \cos\beta_{ci} \\ \cos\gamma_{ci} \end{pmatrix} = \frac{1}{\sqrt{D_{1i}^2 + D_{2i}^2 + D_{3i}^2}} \begin{pmatrix} D_{1i} \\ D_{2i} \\ D_{3i} \end{pmatrix}$$

$$\begin{pmatrix} a_{si} \\ b_{si} \\ c_{si} \end{pmatrix} = \begin{pmatrix} \cos\alpha_{Gz'i} \\ \cos\beta_{Gz'i} \\ \cos\gamma_{Gz'i} \end{pmatrix} X \begin{pmatrix} \cos\alpha_{ci} \\ \cos\beta_{ci} \\ \cos\gamma_{ci} \end{pmatrix}$$

$$\begin{pmatrix} \cos\alpha_{si} \\ \cos\beta_{si} \\ \cos\gamma_{si} \end{pmatrix} = \frac{1}{\sqrt{a_{si}^2 + b_{si}^2 + c_{si}^2}} \begin{pmatrix} a_{si} \\ b_{si} \\ c_{si} \end{pmatrix}$$

$$\begin{pmatrix} a_{xi} \\ b_{xi} \\ c_{xi} \end{pmatrix} = \begin{pmatrix} \cos\alpha_y \\ \cos\beta_y \\ \cos\gamma_y \end{pmatrix} X \begin{pmatrix} \cos\alpha_{Gz'i} \\ \cos\beta_{Gz'i} \\ \cos\gamma_{Gz'i} \end{pmatrix}$$

$$\begin{pmatrix} a_{yi} \\ b_{yi} \\ c_{yi} \end{pmatrix} = \begin{pmatrix} \cos\alpha_x \\ \cos\beta_x \\ \cos\gamma_x \end{pmatrix} X \begin{pmatrix} \cos\alpha_{Gz'i} \\ \cos\beta_{Gz'i} \\ \cos\gamma_{Gz'i} \end{pmatrix}$$

$$\cos\theta_{xGi} = \frac{a_{xi}\cos\alpha_x + b_{xi}\cos\beta_x + c_{xi}\cos\gamma_x}{\sqrt{a_{xi}^2 + b_{xi}^2 + c_{xi}^2}}$$

$$\mathrm{sgn}\theta_{xGi} = \left[\cos\gamma_x - \frac{c_{xi}}{\sqrt{a_{xi}^2 + b_{xi}^2 + c_{xi}^2}}\right]$$

$$\theta_{xGi} = |\theta_{xGi}|\ \mathrm{sgn}\theta_{xGi}$$

$$\cos\varphi_{yGi} = \frac{a_{yi}\cos\alpha_y + b_{yi}\cos\beta_y + c_{yi}\cos\gamma_y}{\sqrt{a_{yi}^2 + b_{yi}^2 + c_{yi}^2}}$$

$$\mathrm{sgn}\varphi_{yGi} = \cos\gamma_y - \frac{c_{yi}}{\sqrt{a_{yi}^2 + b_{yi}^2 + c_{yi}^2}}$$

$$\varphi_{yGi} = |\varphi_{yGi}|\ \mathrm{sgn}\varphi_{yGi}$$

calculate (u_i, v_i, w_i) from <u>Ground Contact Point Velocity Routine</u>

$$\left[\begin{array}{l}(u,v,w),(R,P,Q),h_i\ (\qquad,\cos\beta_{hi},\cos\gamma_{hi}),(x_i,y_i,z_i)\\ \qquad(\dot\varphi_i,\dot\delta_i)\ \text{or}\ (\dot\varphi_{F/R},\dot\delta_{1/3})\end{array}\right]$$

$$u_{Gi} = u_i\cos\theta_{xGi} - w_i\sin\theta_{xGi}$$

$$v_{Gi} = v_i\cos\varphi_{yGi} - w_i\sin\varphi_{yGi}$$

calculate F_{si}, F_{ci}, F'_{Ri} in <u>Tire Forces Routine</u>

$$[h_i(\cos\alpha_{hi},\cos\beta_{hi},\cos\gamma_{hi})\ ,\ \varphi_{CGi}, u_{CGi}, \psi'_i, t]$$

$$\begin{pmatrix} F_{Rxui} \\ F_{Ryui} \\ F_{Rzui} \end{pmatrix} = -F'_{Ri}\,A^T \begin{pmatrix} \cos\alpha_{Gz'i} \\ \cos\beta_{Gz'i} \\ \cos\gamma_{Gz'i} \end{pmatrix}$$

$$\begin{pmatrix} F_{cxui} \\ F_{cyui} \\ F_{czui} \end{pmatrix} = F_{ci}\, A^T \begin{pmatrix} \cos\alpha_{ci} \\ \cos\beta_{ci} \\ \cos\gamma_{ci} \end{pmatrix}$$

$$\begin{pmatrix} F_{sxui} \\ F_{syui} \\ F_{szui} \end{pmatrix} = F_{si}\, A^T \begin{pmatrix} \cos\alpha_{si} \\ \cos\beta_{si} \\ \cos\gamma_{si} \end{pmatrix}$$

$$F_{xui} = F_{Rxui} + F_{cxui} + F_{sxui}$$

$$F_{yui} = F_{Ryui} + F_{cyui} + F_{syui}$$

$$F_{zui} = F_{Rzui} + F_{czui} + F_{szui}$$

calculate (S_{xi}, S_{yi}, S_{zi}) from <u>Applied Suspension Forces Routine</u>

$$[\delta_i, \dot{\delta}_i, M_s]$$

calculate $N_{\varphi ui}, N_{\theta ui}, N_{\psi ui}, F_{zui}$ from <u>Applied Suspension Moments Routine</u>

$$\begin{bmatrix} F_{xui}, F_{yui}, F_{zui}, h_i(\cos\alpha_{hi}, \cos\beta_{hi}, \cos\gamma_{hi}) \\ \delta_i \quad \text{or} \quad (\delta_{F/R}\ ,\ \varphi_{F/R})\ ,\ S_{xi}, S_{yi}, S_{zi} \end{bmatrix}$$

Appendix C

Wheel Rotation Equations of Motion

Tire Force Routine (Friction Ellipse)

Tire Force Routine (Friction Circle)

Wheel Rotation Equations of Motion

Inputs: F_{ci} , h_i

Outputs: $\ddot{\theta}_i$

Parameters: $\overline{AR}_{F/R}$, I_{wj} , I_{Dj} , $\overline{TQ}_j(t)$

Equations: front : i=1 , j=F rear : i=3 , j=R

$$\left(I_{wj} + \frac{I_{Dj}\,\overline{AR}_j^2}{4}\right)\ddot{\theta}_i + \frac{I_{Dj}\,\overline{AR}_j}{4}\ddot{\theta}_{i+1} = -F_{ci}\,h_i + \frac{\overline{AR}_j\,\overline{TQ}_j}{2}$$

$$\left(I_{wj} + \frac{I_{Dj}\,\overline{AR}_j^2}{4}\right)\ddot{\theta}_{i+1} + \frac{I_{Dj}\,\overline{AR}_j}{4}\ddot{\theta}_i = -F_{ci+1}\,h_{i+1} + \frac{\overline{AR}_j\,\overline{TQ}_j}{2}$$

Tire Force Routine (Friction Ellipse)

Inputs: h_i , φ_{CGi} , $\dot{\theta}_i$, u_{Gi} , v_{Gi} , $\dot{\psi}'_i$, t

Outputs: F_{si} , F_{ci} , F'_{Ri}

Parameters: R_w , K_T , T_T , λ_T , Ω_T , A_o , A_1 , A_2 , A_3 , A_4 , μ_i
$\rho_s = f(S_c, u_G)$, $\overline{TQ}_{F/R}(t)$, σ_T

Equations

$$F_{Ri} = 0 \qquad \text{for} \qquad R_w - h_i = 0$$

$$= K_T(R_w - h_i) \qquad \text{for} \qquad 0 < R_w - h_i < \sigma_T$$

$$= K_T\,[\sigma_T + \lambda_T(R_w - h_i) - \sigma_T] \qquad \text{for} \qquad R_w - h_i \geq \sigma_T$$

If $F_{Ri} = 0$ set $F_{si} = F_{ci} = F'_{Ri} = 0$ and exit.

If $F_{Ri} \neq 0$

extrapolate a value of F_{si} from previous calculations.

If $F_{Ri} - F_{si} \sin\varphi_{CGi} \leq 0$ set $F_{si} = F_{ci} = F_{Ri} = 0$ and exit.

If $F_{Ri} - F_{si} \sin\varphi_{CGi} > 0$:

$$F'_{Ri} = F_{Ri} \sec\varphi_{CGi} - F_{si} \tan\varphi_{CGi}$$

If $\max\{|u_{Gi}|, |v_{Gi}|\} < .5$

and if $|h_i\dot{\theta}_i| < .5$ then $S_{ci} = 0$

if $|h_i\dot{\theta}_i| \geq .5$ then $S_{ci} = -\,\mathrm{sgn}(u_{Gi}\theta_i) \cdot 1.0$

Preceding page blank

If $\max\{|u_{Gi}|, |v_{Gi}|\} < .5$

then

$$S_{ci} = 1 - \frac{h_i \dot{\theta}_i}{u_{Gi} \cos\psi_i' + v_{Gi} \sin\psi_i'}$$

and

$$S_{ci} = S_{ci} \qquad \text{if } S_{ci} < 1.00$$

$$= 1.0 \operatorname{sgn} S_{ci} \qquad \text{if } S_{ci} \geq 1.00$$

Interpolate from table

$$\rho_{si} = f(S_{ci}, u_{Gi})$$

Interpolate from table

$$\overline{TQ}_{F/R} = \overline{TQ}_{F/R}(t)$$

If

$$\overline{TQ}_{F/R} > 0 \qquad \text{(traction)}$$

$$F_{ci} = -\rho_{si}\, \mu_i\, F_{Ri}' \operatorname{sgn} u_{Gi}$$

If

$$\overline{TQ}_{F/R} \leq 0 \qquad \text{(braking)}$$

$$\epsilon_{si} = 1.0 \qquad \text{for } |\rho_{si}| \leq 1.0$$

$$= \frac{1}{(\rho_{si})^2} \qquad \text{for } |\rho_{si}| > 1.0$$

$$\left.\begin{aligned} F_{ci} &= -\rho_{si}\, \mu_i\, F_{Ri}' \operatorname{sgn} u_{Gi} \\ &= \frac{-\mu_i\, F_{Ri}' \operatorname{sgn} u_{Gi}}{\epsilon_{si} + \tan^2\left(\arctan \frac{v_{Gi}}{|u_{Gi}|} - \psi_i' \operatorname{sgn} u_{Gi}\right)} \end{aligned}\right\} \text{whichever has smaller absolute value}$$

If $F'_{Ri} > \Omega_T A_2$

$$\beta'_i = \frac{A_2 A_3 (A_4 - F'_{Ri}) F'_{Ri}}{A_4 [A_1 F'_{Ri}(F'_{Ri} - A_2) - A_o A_2]} \left(\varphi_{CGi} - \frac{2}{\pi} \varphi_{CGi} |\varphi_{CGi}|\right)$$

$$\bar{\beta}'_i = \frac{A_1 F'_{Ri}(F'_{Ri} - A_2) - A_o A_2}{A_2 \sqrt{\mu_i^2 (F'_{Ri})^2 - \epsilon_{si} F_{ci}^2}} \left(\arctan \frac{v_{Gi}}{|u_{Gi}|} + \beta'_i - \psi'_i \operatorname{sgn} u_{Gi}\right)$$

If $F'_{Ri} > \Omega_T A_2$

$$\beta'_i = \frac{A_2 A_3 (A_4 - \Omega_T A_2) \Omega_T}{A_4 [A_1 A_2 \Omega_T (\Omega_T - 1) - A_o]} \left(\varphi_{CGi} - \frac{2}{\pi} \varphi_{CGi} |\varphi_{CGi}|\right)$$

$$\bar{\beta}'_i = \frac{A_1 A_2 \Omega_T (\Omega_T - 1) - A_o}{\sqrt{\mu_i^2 (F'_{Ri})^2 - \epsilon_{si} F_{ci}^2}} \left(\arctan \frac{v_{Gi}}{|u_{Gi}|} + \beta'_i - \psi'_i \operatorname{sgn} u_{Gi}\right)$$

[Programming note: $F'_{Ri} > \Omega_T A_2$ case is same as $F'_{Ri} \le \Omega_T A_2$ with $\Omega_T A_2$ substituted for F_{Ri} except in $\sqrt{}$]

If $|\epsilon_{si} F_{ci}| \ge |\mu_i F'_{Ri}| - 1.0$ then $F_{si} = 0$

If $\max\{|v_{Gi}|, |u_{Gi}|\} < .5$ then $F_{si} = 0$

If $\max\{|v_{Gi}|, |u_{Gi}|\} \ge .5$ and $|\bar{\beta}_i| < 3$

then

$$F_{si} = \sqrt{\mu_i^2 F_{Ri}^2 - \epsilon_{si} F_{ci}^2} \quad [\bar{\beta}_i - \frac{1}{3} \bar{\beta}_i |\bar{\beta}_i| + \frac{1}{27} \beta_i^3]$$

If $\max \{|v_{Gi}|, |u_{Gi}|\} \ge .5$ and $|\bar{\beta}| \ge 3$

$$F_{si} = (\operatorname{sgn} \bar{\beta}_i) \sqrt{\mu_i^2 (F'_{Ri})^2 - \epsilon_{si} F_{ci}^2}$$

Use this calculated value of F_{si} to reenter the iteration at the beginning of this routine and continue until a suitable criterion is met.

Tire Forces Routine (Friction Circle)

Inputs: h_i , $(\cos\alpha_{hi}, \cos\beta_{hi}, \cos\gamma_{hi})$, φ_{CGi} $\quad i=1,2,3,4$

u_{Gi} , v_{Gi} , ψ_i' , t

Outputs: F_{si} , F_{ci} , F_{Ri}' $\quad i=1,2,3,4$

Parameters: R_w , K_T , σ_T , λ_T , μ , $\overline{TQ}_F(t)$, $\overline{TQ}_R(t)$

A_o , A_1 , A_2 , A_3 , A_4 , Ω_T

Equations

$$
\begin{aligned}
F_{Ri} &= 0 && R_w - h_i = 0 \\
&= K_T(R_w - h_i) && 0 < R_w - h_i < \sigma_T \\
&= K_T[\lambda_T(R_w - h_i) - (\lambda_T - 1)\sigma_T] && \sigma_T \le R_w - h_i
\end{aligned}
$$

Beginning of iteration on F_{si} : use F_{sie} as starting value:

If $F_{Ri} = 0$ or $F_{Ri} \le F_{si} \sin \varphi_{CGi}$

then $F_{si} = F_{ci} = F_{Ri}' = 0.$

Else

$$F_{Ri}' = F_{Ri} \sec \varphi_{CGi} - F_{si} \tan \varphi_{CGi}$$

Look up $\overline{TQ}_F$, $\overline{TQ}_R$.

$$T_i = \frac{12}{h_i} \overline{TQ}_F \qquad i=1,2$$

$$T_i = \frac{12}{h_i} \overline{TQ}_R \qquad i=3,4$$

$$T_{im} = \mu F_{Ri}' \cos\left(\arctan \frac{v_{Gi}}{|u_{Gi}|} - \psi_i' \operatorname{sgn} u_{Gi}\right)$$

Preceding page blank

If $T_i < 0$ and $|u_{Gi}| \geq 1.932$ $\quad F_{ci} = T_i \operatorname{sgn} u_{Gi}$ for $|T_i| \leq T_{im}$

$\quad = -T_{im} \operatorname{sgn} u_{Gi}$ for $|T_i| > T_{im}$

If $T_i < 0$ and $|u_{Gi}| < 1.932$ $\quad F_{ci} = T_i \dfrac{u_{Gi}}{1.932}$ for $|T_i| \leq T_{im}$

$\quad = -T_{im} \dfrac{u_{Gi}}{1.932}$ for $|T_i| > T_{im}$

If $T_i = 0$ $\quad F_{ci} = 0$

If $T_i > 0$ $\quad F'_{ci} = T_i$ for $T_i \leq |\mu F'_{Ri}|$

$\quad = \mu F'_{Ri}$ for $T_i > |\mu F'_{Ri}|$

If for all i $\quad T_i \leq |\mu F'_{Ri}|$ then $F_{ci} = F'_{ci}$

If $T_1 > |\mu F'_{R1}|$ or $T_2 > |\mu F'_{R2}|$

and if $F'_{c1}h_1 \leq F'_{c2}h_2$ then $F_{c1} = F'_{c1}$ and $F_{c2} = F'_{c1}\dfrac{h_1}{h_2}$

if $F'_{c1}h_1 > F_{c2}h_2$ then $F_{c1} = F'_{c2}\dfrac{h_2}{h_1}$ and $F_{c2} = F'_{c2}$

If $T_3 > |\mu F'_{R3}|$ or $T_4 > |\mu F'_{R4}|$

and if $F'_{c3}h_3 \leq F'_{c4}h_4$ then $F_{c3} = F'_{c3}$ and $F_{c4} = F'_{c3}\dfrac{h_3}{h_4}$

if $F'_{c3}h_3 > F'_{c4}h_4$ then $F_{c3} = F'_{c4}\dfrac{h_4}{h_3}$ and $F_{c4} = F'_{c4}$

If $F'_{Ri} \le \Omega_T A_2$

$$\beta'_i = \frac{A_2 A_3 (A_4 - F'_{Ri}) F'_{Ri}}{A_4 [A_1 F'_{Ri} (F'_{Ri} - A_2) - A_o A_2]} \left(\varphi_{CGi} - \frac{2}{\pi} \varphi_{CGi} |\varphi_{CLi}|\right)$$

$$\bar{\beta}_i = \frac{A_1 F'_{Ri} (F_{Ri} - A_2) - A_o A_2}{A_2 [\mu^2 (F'_{Ri})^2 - F_{ci}^2)^{1/2}} \left(\arctan \frac{v_{Gi}}{|u_{Gi}|} + \beta'_i - \psi'_i \operatorname{sgn} u_{Gi}\right)$$

If $F'_{Ri} > \Omega_T A_2$

$$\beta'_i = \frac{A_2 A_3 (A_4 - \Omega_T A_2) \Omega_T}{A_4 [A_1 A_2 \Omega_T (\Omega_T - 1) - A_o]} \left(\varphi_{CGi} - \frac{2}{\pi} \varphi_{CGi} |\varphi_{CGi}|\right)$$

$$\bar{\beta}_i = \frac{A_1 A_2 \Omega_T (\Omega_T - 1) - A_o}{[\mu^2 (F_{Ri})^2 - F_{ci}^2]^{1/2}} \left(\arctan \frac{v_{Gi}}{|u_{Gi}|} + \beta'_i - \psi'_i \operatorname{sgn} u_{Gi}\right)$$

If $|F_{ci}| \ge |\mu F'_{Ri}| - 1.0$ then $F_{si} = 0$

If $\max\{|v_{Gi}|, |u_{Gi}|\} < .5$ $F_{si} = 0$

If $\max\{|v_{Gi}|, |u_{Gi}|\} \ge .5$ and $|\bar{\beta}_i| < 3$

$$F_{si} = \sqrt{\mu^2 (F'_{Ri})^2 - F_{ci}^2} \left(\bar{\beta}_i - \frac{1}{3} \bar{\beta}_i |\bar{\beta}_i| + \frac{1}{27} \bar{\beta}_i^3\right)$$

If $\max\{|v_{Gi}|, |u_{Gi}|\} \ge .5$ and $|\bar{\beta}_i| \ge 3$

$$F_{si} = (\operatorname{sgn} \bar{\beta}_i) \sqrt{\mu^2 (F'_{Ri})^2 - F_{ci}^2}$$

Use this calculated value of F_{si} to reenter the iteration at the beginning of this routine and continue until a suitable criterion is met.

Appendix C
SOLID AXLE ROUTINES

Unsprung Mass Equations of Motion

Unsprung Mass Inertial Force

Unsprung Mass Gravity Force

Wheel Position

Wheel Rotation and Steering Axle Direction

Ground Contact Point Velocity

Applied Suspension Forces

Applied Suspension Moments

<u>Unsprung Mass Equations of Motion</u> (Solid Axle)

<u>Inputs</u>: $(u,v,w),(\ ,\ \dot{v},\ \dot{w}),(P,Q,R),(\dot{P},\dot{Q},\dot{R}),(\varphi,\theta,\ )$

$F_{zu1}, S_1, G_{zu1}, \delta_{1/3}$ and $\varphi_{F/R}, \dot{\delta}_{1/3}$ and $\dot{\varphi}_{F/R}, h_1, (\quad, \cos\beta_{h1}, \cos\gamma_{h1})$

<u>Outputs</u>: $\ddot{\delta}_{1/3}$, $\ddot{\varphi}_{F/R}$

<u>Parameters</u>: front: M_{uF} , I_F , a , T_F , z_F , $\rho_{F,g}$

rear: M_{uR} , I_R , $-b$, T_R , z_R , ρ_R , g

<u>Equations:</u>

Front:

$$M_u\,(\ddot{\delta}_1-\ddot{\varphi}_F\,\rho_F\sin\varphi_F) = M_{uF}[\rho_F\dot{\varphi}_F\cos\varphi_F-\dot{w}-Pv+Qu+2P\rho_F\dot{\varphi}_F\cos\varphi_F-a(PR-\dot{Q})$$
$$+\rho_F\sin\varphi_F(QR+\dot{P})+(z_F+\delta_1+\rho_F\cos\varphi_F)(P^2+Q^2)]$$
$$+F_{zu1}+F_{zu2}+S_1+S_2+G_{zu1}+G_{zu2}$$

$$N_{\varphi F} = \frac{T_{sF}}{2}(S_1-S_2) - F_{yu1}(\frac{T_F}{2}\sin\varphi_F+h_1\cos\gamma_{h1})-F_{zu1}(\frac{T_F}{2}\cos\varphi_F+h_1\cos\beta_{h1})$$
$$-F_{yu2}(-\frac{T_F}{2}\sin\varphi_F+h_2\cos\gamma_{h2})+F_{zu4}(\frac{T_F}{2}\cos\varphi_F+h_2\cos\beta_{h2})$$

$$(I_F+M_{uF}\rho_F^2)\ddot{\varphi}_F-M_{uF}\rho_F\ddot{\delta}_1\sin\varphi_F = M_{uF}\rho_F\cos\varphi_F\dot{v}+M_{uF}\rho_F\sin\varphi_F\dot{w}-M_{uF}\rho_F\sin\varphi_F a\dot{Q}$$
$$-(M_{uF}\rho\cos\varphi_F[z_F+\delta_1+\rho_F\cos\varphi_F]+I_F+M_{uF}\rho_F^2\sin^2\varphi_F)\dot{P}+M_{uF}\rho_F\cos\varphi_F a\dot{R}$$
$$+M_{uF}\rho_F\cos\varphi_F[Ru-Pw-2P\dot{\delta}_1+aPQ+\rho_F(P^2+R^2)$$
$$+(z_F+\delta_1+\rho_F\cos\varphi_F)QR-g\cos\theta\sin(\varphi+\varphi_F)]$$
$$+M_{uF}\rho_F\sin\varphi_F[Pv-Qu+aPR-\rho_F\sin\varphi_F QR-(z_F+\delta_1+\rho_F\cos\varphi_F)(P^2+Q^2)]$$
$$+I_F[\sin\varphi_F\cos\varphi_F(Q^2-R^2)-(1-2\sin^2\varphi_F)QR]+N_{\varphi F}$$

<u>rear</u>: same as front except substitute

M_{uR}	for	M_{uF}
I_R	"	I_F
$-b$	"	a
T_R	"	T_F
z_R	"	z_F
ρ_R	"	ρ_F

<u>Unsprung Mass Inertial Force Routine</u> (Solid Axle)

<u>Inputs</u>: $(u,v,w),(\dot{u},\dot{v}),(P,Q,R),(\dot{P},\dot{Q},\dot{R})$

$\delta_{1/3}$, $\dot{\delta}_{1/3}$, $\varphi_{F/R}$, $\dot{\varphi}_{F/R}$, $\ddot{\varphi}_{F/R}$

<u>Outputs</u>: I_{xui} , I_{yui} , I_{zui} , $I_{\varphi ui}$, $I_{\theta ui}$, $I_{\psi ui}$

<u>Parameters</u>: front: M_{uF} , a , ρ , z_F

rear: M_{uR} , $-b$, ρ , z_R

<u>Equations</u>:

<u>Front</u>:

$$I_{xu1} = M_{uF}[\dot{u}-vR+wQ+2Q(\dot{\delta}_1-\rho\dot{\varphi}_F\sin\varphi_F)+2R\rho\dot{\varphi}_F\cos\varphi_F-a(Q^2+R^2)$$
$$-\rho\sin\varphi_F(PQ-\dot{R})+(z_F+\delta_1+\rho\cos\varphi_F)(PR-\dot{Q})]$$

$$I_{xu2} = 0 \ , \ I_{\varphi u1} = I_{yu1}(z_F+\delta_1) \ , \ I_{\varphi u2} = 0$$

$$I_{yu1} = M_{uF}[\dot{v}+uR-wP+\rho\dot{\varphi}_F\sin\varphi_F-\rho\ddot{\varphi}_F\cos\varphi_F-2P(\dot{\delta}_1-\rho\dot{\varphi}_F\sin\varphi_R)$$
$$+a(PQ+\dot{R})+\rho\sin\varphi_F(P^2+R^2)+(z_F+\delta_1+\rho\cos\varphi_F)(QR-\dot{P})]$$

$$I_{yu2} = 0 \ , \ I_{\theta u1} = I_{xu1}(z_F+\delta_1+\rho\cos\varphi R) \ , \ I_{\theta u2} = 0$$

$$I_{zu1} = 0 \ , \ I_{\psi u1} = I_{xu1}\rho\sin\varphi_R+I_{yu1}a$$

$$I_{zu2} = 0 \ , \ I_{\psi u_2} = 0$$

<u>rear</u>:

$$l_{xu3} = M_{uR}[\dot{u}-vR+wQ+2Q(\dot{\delta}_3-\rho\dot{\varphi}_R\sin\varphi_R)+2R\rho\dot{\varphi}_R\cos\varphi_R)-(-b)(Q^2+R^2)$$
$$-\rho\sin\varphi_R(PQ-\dot{R})+(z_R+\delta_3+\rho\cos\varphi_R)(PR-\dot{Q})]$$

$$l_{xu4} = 0\ ,\ l_{\varphi u3} = l_{yu3}(z_R+\delta_3)\ ,\ l_{\varphi u4} = 0$$

$$l_{yu4} = M_{uR}[\dot{v}+uR-wP+\rho\dot{\varphi}_R^{\,2}\sin\varphi_R-\rho\ddot{\varphi}_R\cos\varphi_R-2P(\dot{\delta}_3-\rho\dot{\varphi}_R\sin\varphi_R)$$
$$+(-b)(PQ+\dot{R})+\rho\sin\varphi_R(P^2+R^2)+(z_R+\delta_3+\rho\cos\varphi_R)(QR-\dot{P})]$$

$$l_{yu4} = 0\ ,\ l_{\theta u3} = l_{xu3}(z_R+\delta_3+\rho\cos\varphi_R)\ ,\ l_{\theta u4} = 0$$

$$l_{zu3} = 0\ ,\ l_{\psi u3} = l_{xu3}\rho\sin\varphi_R+l_{yu3}(-b)$$

$$l_{zu4} = l_{\psi u4} = 0$$

Unsprung Mass Gravity Force Routine (Solid Axle)

Inputs: $(-\sin\theta, \cos\theta\sin\varphi, \cos\theta\cos\varphi)$ = last row of A

$\delta_{1/3}$, $\varphi_{F/R}$

Outputs: G_{xui} , G_{yui}, G_{zui} , $G_{\varphi ui}$, $G_{\theta ui}$, $G_{\psi ui}$

Parameters: front: M_{uF} , g , z_F , ρ , a

rear: M_{uR} , g , z_R , ρ , $-b$

Equations:

$$\left.\begin{array}{ll} G_{xu1/3} = -M_{uF/R}g\sin\theta & G_{xu2/4} = 0 \\ G_{yu1/3} = M_{uF/R}g\cos\theta\sin\varphi & G_{yu2/4} = 0 \\ G_{zu1/3} = 0 & G_{zu2/4} = 0 \end{array}\right\} \text{F and R}$$

front:

$$G_{\varphi u1} = -G_{yu1}(z_F+\delta_1) \qquad G_{\varphi u2} = 0$$

$$G_{\theta u1} = G_{xu1}(z_F+\delta_1+\rho\cos\varphi) \qquad G_{\theta u2} = 0$$

$$G_{\psi u1} = G_{xu1}\,\rho\sin\varphi_F+G_{yu1}\,a \qquad G_{\psi u2} = 0$$

rear:

$$G_{\varphi u3} = -G_{yu3}(z_R+\delta_3) \qquad G_{\varphi u4} = 0$$

$$G_{\theta u3} = G_{xu3}(z_R+\delta_3+\rho\cos\varphi_R) \qquad G_{\theta u4} = 0$$

$$G_{\psi u3} = G_{xu3}\rho\sin\varphi_R+G_{yu3}(-b) \qquad G_{\psi u4} = 0$$

Wheel Position Routine (Solid Axle)

Inputs: (δ_1, φ_F) or (δ_3, φ_R)

Outputs: (x_i, y_i, z_i)

Parameters: front: a, T_F, z_F, ρ

rear: $-b, T_R, z_R, \rho$

Equations

front:

$$x_i = a$$

$$y_i = -(-1)^i \frac{T_F}{2} \cos\varphi_F - \rho \sin\varphi_F \qquad i=1,2$$

$$z_i = z_F + \delta_1 + \rho\cos\varphi_F + \frac{T_F}{2} \sin \varphi_F$$

rear:

$$x_i = -b$$

$$y_i = -(-1)^i \frac{T_R}{2} \cos\varphi_R - \rho \sin \varphi_R \qquad i=3,4$$

$$z_i = z_R + \delta_3 + \rho\cos\varphi_R + \frac{T_R}{2} \sin \varphi_R$$

Preceding page blank

Wheel Rotation and Steering Axle Direction Routine (Solid Axle)

Inputs: t , φ_F or φ_R , $\dot{\varphi}_F$ or $\dot{\varphi}_R$

Outputs: $\dot{\varphi}_i$

$(-\cos\varphi_i \sin\psi_i, \cos\varphi_i \cos\psi_i, \sin\varphi_i)$ and $(\sin\varphi_i \sin\psi_i, -\cos\psi_i \sin\varphi_i, \cos\varphi_i)$

Parameters: front: a , b , T_F , K_{SF} , $\psi(t)$

rear: K_{SR}

Equations:

for steer axle (assumed front):

$$\varphi_1 = \varphi_2 = \varphi_F$$

$$\dot{\varphi}_1 = \dot{\varphi}_2 = \dot{\varphi}_F$$

look up and interpolate $\psi_F = \psi(t)$

$$\psi_i = \tan^{-1}\left[\frac{(a+b)\tan\psi_F}{a+b+(-1)^i \frac{T_F}{2}\tan\psi_F}\right] + K_{SF}\varphi_F \qquad i=1,2$$

for non-steer axle (assumed rear):

$$\varphi_3 = \varphi_4 = \varphi_R$$

$$\dot{\varphi}_3 = \dot{\varphi}_4 = \dot{\varphi}_R$$

$$\psi_3 = \psi_4 = K_{SR}\varphi_R$$

calculate:

$$\begin{pmatrix} -\cos\varphi_i \sin\psi_i \\ \cos\varphi_i \cos\psi_i \\ \sin\varphi_i \end{pmatrix} \quad \text{and} \quad \begin{pmatrix} \sin\varphi_i \sin\psi_i \\ -\cos\psi_i \sin\varphi_i \\ \cos\varphi_i \end{pmatrix}$$

Preceding page blank

Ground Contact Point Velocity Routine (Solid Axle)

Input: (u,v,w) , (P,Q,R) , (x_i,y_i,z_i)

h_i , (, $\cos\beta_{hi}$,$\cos\gamma_{hi}$) , $(\dot{\varphi}_F,\dot{\delta}_1)$ or $(\dot{\varphi}_R,\dot{\delta}_3)$

Output: (u_i,v_i,w_i)

Parameters; front: T_F,ρ_F

rear: T_R,ρ_R

Equations:

front:

$$u_i = u+Qz_i-Ry_i$$

$$v_i = v+R\,x_i-P(z_i+h_i\cos\gamma_{hi}) + \dot{\varphi}_F(\rho\cos\varphi_F+\frac{T_F}{2}\sin\varphi_F+h_i\cos\gamma_{hi})$$

$$w_i = w+(P+\dot{\varphi}_F)(y_i+h_i\cos\beta_{hi})-Qx_i + \dot{\delta}_1$$

rear:

$$u_i = u+Qz_i-Ry_i$$

$$v_i = v+Rx_i-P(z_i+h_i\cos\gamma_{hi})+\dot{\varphi}_i(\rho\cos\varphi_R+\frac{T_R}{2}\sin\varphi_R+h_i\cos\gamma_{hi})$$

$$w_i = w+(P+\dot{\varphi}_R)(y_i+h_i\cos\beta_{hi}) - Qx_i+\dot{\delta}_3$$

N.B. u_i is the forward velocity of the wheel center

v_i,w_i is the lateral and vertical velocity of the contact patch "center"

For analog implementation, this routine can be combined with the Wheel Position Routine.

Preceding page blank

Applied Suspension Forces Routine (Solid Axle)

Inputs: $\varphi_{F/R}$, $\delta_{i/3}$, $\dot{\varphi}_{F/R}$, M_s

Outputs: S_{xi} , S_{yi} , S_{zi}

Parameters: front: T_{SF} , C_F' , ϵ_F , K_F , Ω_F , λ_F , a , C_F , R_F , b

rear: T_{SR} , C_R' , ϵ_R , K_R , Ω_R , λ_R , b , C_R , R_R , a

Equations:

front:

$$\zeta_i = -(-1)^i \frac{T_{sF}}{2} \sin\varphi_F + \delta_1$$

$$\dot{\zeta}_i = -(-1)^i \frac{T_{sF}}{2} \dot{\varphi}_F \cos\varphi_F + \dot{\delta}_1$$

$$F_{1Fi} = 0 \qquad |\dot{\zeta}_i| \le \epsilon_F$$

$$= C_F' \operatorname{sgn} \dot{\zeta}_i \qquad |\dot{\zeta}_i| > \epsilon_F$$

$$F_{2Fi} = K_F \zeta_i \qquad 0 \le |\zeta_i| < \Omega_F$$

$$= K_F[\Omega_F \operatorname{sgn} \zeta_i + \lambda_F(\zeta_i - \Omega_F \operatorname{sgn} \zeta_i)] \qquad |\zeta_i| \ge \Omega_F$$

$$S_{zi} = \frac{b}{2(a+b)} M_s g - C_F \dot{\zeta}_i - F_{1Fi} - F_{2Fi} + (-1)^i \left[\frac{R_F}{T_{sF}}\right] \varphi_F$$

$$S_{xi} = S_{yi} = 0$$

rear:

$$\zeta_i = -(-1)^i \frac{T_{sR}}{2} \sin\varphi_R + \delta_3$$

$$\dot{\zeta}_i = -(-1)^i \frac{T_{sR}}{2} \dot{\varphi}_R \cos \varphi_R + \dot{\delta}_3$$

$$F_{1Ri} = 0 \qquad |\dot{\zeta}_i| \le \epsilon_R$$

$$= C_R' \operatorname{sgn} \dot{\zeta}_i \qquad |\dot{\zeta}_i| > \epsilon_R$$

Preceding page blank

$$F_{2Ri} = K_R \zeta_i \qquad |\zeta_i| < \Omega_R$$

$$= K_R[\Omega_R \operatorname{sgn} \zeta_i + \lambda_R(\zeta_i - \Omega_R \operatorname{sgn} \zeta_i)] \qquad |\zeta_i| \geq \Omega_R$$

$$S_{zi} = \frac{a}{2(a+b)} M_{sg} - C_R \dot{\zeta}_i - F_{1Ri} - F_{2Ri} + (-1)^i \left[\frac{R_R}{T_{sR}}\right] \varphi_R$$

$$S_{xi} = S_{zi} = 0$$

Applied Suspension Moments Routine (Solid Axle)

Inputs: F_{uxi} , F_{uyi} , F_{uzi} , $\delta_{1/3}$, $\varphi_{F/R}$, S_{xi} , S_{yi} , S_{zi}
h_i , ($\cos\alpha_{hi}$, $\cos\beta_{hi}$,)

Outputs: $N_{\varphi ui}$, $N_{\theta ui}$, $N_{\psi ui}$, F_{uzi}

Parameters: front: z_F , T_F , a , T_{sF}

rear: z_R , T_R , $-b$, T_{sR}

Equations:

front:

$$N_{\varphi ui} = -F_{uyi}(z_F+\delta_1) + (-1)^i \frac{T_{sF}}{2} S_{zi}$$

$$N_{\theta ui} = F_{uxi}(z_F+\delta_1)+a\, S_{zi}$$

$$N_{\psi ui} = (-1)^i F_{uxi}(\frac{T_F}{2}\cos\varphi_R - \rho\sin\varphi_R - h_i\cos\beta_{hi}) + F_{yui}(a+h_i\cos\alpha_{hi})$$

rear:

$$N_{\varphi ui} = -F_{uyi}(z_R+\delta_3)+(-1)^i \frac{T_{sR}}{2} S_{zi}$$

$$N_{\theta ui} = F_{uxi}(z_R+\delta_3)+(-b)\, S_{zi}$$

$$N_{\psi ui} = (-1)^i F_{uxi}(\frac{T_R}{2}\cos\varphi_R - \rho\sin\varphi_R - h_i\cos\beta_{hi}) + F_{yui}(-b+h_i\cos\alpha_{hi})$$

This routine must set $F_{uzi} = 0$ since all suspension forces propagate through the springs.

Appendix E

DOUBLE A-ARM SUSPENSION ROUTINES

Unsprung Mass Equations of Motion

Unsprung Mass Inertial Force

Unsprung Mass Gravity Force

Wheel Position

Wheel Position and Steering Axle Direction

Ground Contact Point Velocity

Applied Suspension Force

Applied Suspension Moments

Unsprung Mass Equation of Motion (Double A-Arm)

Inputs: $(u, v, \ ), (\ , \ , \dot{w}), (P, Q, R), (\dot{P}, \dot{Q}, \ )$

F_{zui} , S_i , G_{zui} , δ_i

Outputs: $\ddot{\delta}_i$

Parameters: front: M_i , a , T_F , z_F

rear: M_i , $-b$, T_R , z_R

Equations:

Front:

$$M_i\ddot{\delta}_i = F_{zui}+S_i+G_{zui}-M_i[\dot{w}+Pv-Qu+a(PR-\dot{Q})-(-1)^i \frac{T_F}{2}(QR+\dot{P}) -(z_F+\delta_i)(P^2+Q^2)]$$

Rear:

$$M_i\delta_i = F_{zui}+S_i+G_{zui}-M_i[\dot{w}+Pv-Qu+(-b)(PR-\dot{Q})-(-1)\frac{T_R}{2}(QR+\dot{P}) -(z_R+\delta_i)(P^2+Q^2)]$$

Unsprung Mass Inertial Force Routine (Double A-Arm)

Inputs: $(u,v,w),(\dot{u},\dot{v},\ ),(P,Q,R),(\dot{P},\dot{Q},\dot{R})$

$\delta_i\ ,\ \dot{\delta}_i$

Outputs: $I_{xui}\ ,\ I_{yui}\ ,\ I_{zui}\ ,\ I_{\varphi ui}\ ,\ I_{\theta ui}\ ,\ I_{\psi ui}$

Parameters: front: $M_i\ ,\ a\ ,\ T_F\ ,\ z_F$

rear: $M_i\ ,\ -b\ ,\ T_R\ ,\ z_F$

Equations:

front:

$$I_{xui} = M_i[\dot{u}-vR+wQ+2Q\dot{\delta}_i-a(Q^2+R^2)+(-1)^i\frac{T_F}{2}(\dot{R}-QP)+(z_F+\delta_i)(PR+\dot{Q})]$$

$$I_{yui} = M_i[\dot{v}+Ru-Pw-2P\dot{\delta}_i+a(\dot{R}+PQ)+(-1)^i\frac{T_F}{2}(R^2+P^2)+(z_F+\delta_i)(RQ-\dot{P})]$$

$$I_{zui} = 0$$

$$I_{\varphi ui} = I_{yui}(z_F+\delta_i)$$

$$I_{\theta ui} = -I_{xui}(z_F+\delta_i)$$

$$I_{\psi ui} = -(-1)^i\frac{T_F}{2}I_{xui} - I_{yui}\,a$$

rear:

$$I_{xui} = M_i[\dot{u}-vR+wQ+2Q\dot{\delta}_i-(-b)(Q^2+R^2)+(-1)^i\frac{T_R}{2}(\dot{R}-QP)+(z_F+\delta_i)(PR+\dot{Q})]$$

$$I_{yui} = M_i[\dot{v}+Ru-Pw-2P\dot{\delta}_i+(-b)(\dot{R}+PQ)+(-1)^i\frac{T_R}{2}(R^2+P^2)+(z_F+\delta_i)(RQ-\dot{P})]$$

$$I_{zui} = 0$$

$$I_{\varphi ui} = I_{yui}(z_R+\delta_i)$$

$$I_{\theta ui} = {}_{xui}(z_R+\delta_i)$$

$$I_{\psi ui} = -(-1)^i\frac{T_R}{2}I_{xui}-I_{yui}(-b)$$

Preceding page blank

Unsprung Mass Gravity Force Routine (Double A-Arm)

Inputs: $(-\sin\theta, \cos\theta\sin\varphi, \cos\theta\cos\varphi)$ = last row of A

δ_i

Outputs: G_{xui}, G_{yui}, G_{zui}, $G_{\varphi ui}$, $G_{\theta ui}$, $G_{\psi ui}$

Parameters: M_i, g

front: z_F, T_F, a

rear: z_R, T_R, $-b$

Equations:

$$G_{xui} = M_i g \sin\theta$$

$$G_{yui} = M_i g \cos\theta \sin\varphi$$

$$G_{zui} = 0 \qquad \text{(No force propagation vertically)}$$

front:

$$G_{\varphi ui} = -G_{yui}(z_F+\delta_i)$$

$$G_{\theta ui} = G_{xui}(z_F+\delta_i)$$

$$G_{\psi ui} = (-1)^i G_{xui} \frac{T_F}{2} + G_{yui}\, a$$

rear:

$$G_{\varphi ui} = -G_{yui}(z_R+\delta_i)$$

$$G_{\theta ui} = G_{xui}(z_R+\delta_i)$$

$$G_{\psi ui} = (-1)^i G_{xui} \frac{T_R}{2} + G_{yui}(-b)$$

Preceding page blank

Wheel Position Routine (Double A-Arm)

Inputs: δ_i

Outputs: (x_i, y_i, z_i)

Parameters: front: a , T_F , z_F

rear: $-b$, T_R , z_R

Equations:

Front:

$$x_i = a$$

$$y_i = -(-1)^i \frac{T_F}{2} \qquad i = 1,2$$

$$z_i = z_F + \delta_i$$

Rear:

$$x_i = -b$$

$$y_i = -(-1)^i \frac{T_R}{2} \qquad i = 3,4$$

$$z_i = z_R + \delta_i$$

Wheel Position and Steering Axle Direction Routine (Double A-Arm)

Inputs: δ_i , t

Outputs: $\dot{\varphi}_i$

$(-\cos\varphi_i \sin\psi_i, \cos\varphi_i \cos\psi_i \sin\varphi_i), (\sin\varphi_i \sin\psi_i, -\cos\varphi_i \sin\varphi_i, \cos\varphi_i)$

Parameters: front: a,b, T_F , $\varphi(\delta)$, $\psi(t)$

rear: a , b , $\varphi(\delta)$, $\psi(\delta)$

Equations:

interpolation from $\varphi(\delta)$ table

$$\varphi_i = \varphi(\delta_i)$$

$\dot{\varphi}_i$ calculated somehow - suggest fit poly to $\varphi(\delta_i)$ curve and differentiate it

for steer axle: (assumed front)

look up and interpolate $\psi_F = \psi(t)$

then

$$\psi_1 = \tan^{-1}\left[\frac{(a+b)\tan\psi_F}{a+b-\frac{T_F}{2}\tan\psi_F}\right]$$

$$\psi_2 = \tan^{-1}\left[\frac{(a+b)\tan\psi_F}{a+b+\frac{T_F}{2}\tan\psi_F}\right]$$

for non-steer axle: (assumed rear)

interpolate $\psi_i = \psi(\delta_i)$ $\quad i=3,4$

calculate:

$$\begin{pmatrix} -\cos\varphi_i \sin\psi_i \\ \cos\varphi_i \cos\psi_i \\ \sin\varphi_i \end{pmatrix} \quad \text{and} \quad \begin{pmatrix} \sin\varphi_i \sin\psi_i \\ -\cos\varphi_i \sin\psi_i \\ \cos\varphi_i \end{pmatrix}$$

Preceding page blank

Ground Contact Point Velocity Routine (Double A-arm)

Inputs: $(u,v,w),(R,P,Q),$

h_i , $\cos\beta_{hi}$,$\cos\gamma_{hi}$, (x_i,y_i,z_i) , $\dot{\varphi}_i,\dot{\delta}_i$

Outputs: (u_i,v_i,w_i)

Parameters:

Equations:

$$u_i=u+Qz_i-Ry_i$$

$$v_i = v+Rx_i-P(z_i+h_i\cos\gamma_{hi})-\dot{\varphi}_i h_i\cos\gamma_{hi}$$

$$w_i = w+P(y_i+h_i\cos\beta_{hi})-Qx_i+\dot{\varphi}_i h_i\cos\beta_{hi}+\dot{\delta}_i$$

$$i = 1,2 \text{ or } 3,4$$

N.B. u_i is the forward velocity of the wheel center

v_i,w_i is the lateral and vertical velocity of the contact patch "center"

For analog implementation, this routine can be combined with the Wheel Position Routine.

Preceding page blank

Applied Suspension Force Routine (Double A-Arm)

Input: δ_i , $\dot{\delta}_i$, M_s

Output: S_{xi} , S_{yi}, S_{zi}

Parameters: front: C_F' , ϵ_F , K_F , Ω_F , λ_F , a , C_F , R_F , T_F , b

rear: C_R' , ϵ_R , K_R , Ω_R , λ_R , b , C_R , R_R , T_R , a

Equations:

front:

$$F_{1Fi} = 0 \qquad |\dot{\delta}_i| \leq \epsilon_F$$

$$= C_F' \operatorname{sgn} \dot{\delta}_i \qquad |\dot{\delta}_i| > \epsilon_F$$

$$F_{2Fi} = K_F \delta_i \qquad |\delta_i| \leq \Omega_F$$

$$= K_F[\Omega_F \operatorname{sgn} \delta_i + \lambda_F(\delta_i - \Omega_F \operatorname{sgn} \delta_i)] \qquad |\delta_i| > \Omega_F$$

$$S_{zi} = \frac{b}{(a+b)} \frac{M_s g}{2} - C_F \dot{\delta}_i - F_{1Fi} - F_{2Fi} - (-1)^i \left[\frac{R_F}{T_F} \frac{(\delta_2 - \delta_1)}{T_F}\right]$$

rear:

$$F_{1Ri} = 0 \qquad |\dot{\delta}_i| \leq \epsilon_R$$

$$= C_R' \operatorname{sgn} \dot{\delta}_i \qquad |\dot{\delta}_i| > \epsilon_R$$

$$F_{2Ri} = K_R S_i \qquad |\delta_i| \leq \Omega_F$$

$$= K_R[\Omega_R \operatorname{sgn} \delta_i + \lambda_R(\delta_i - \Omega_F \operatorname{sgn} S_i)] \qquad |\delta_i| > \Omega_F$$

$$S_{zi} = \frac{a}{2(a+b)} M_s g - C_R \delta_i - F_{1Ri} - F_{2Ri} - (-1)^i \frac{R_R}{T_R} \frac{(\delta_4 - \delta_3)}{T_R}$$

$$S_{xi} = S_{zi} = 0$$

Preceding page blank

Applied Suspension Moments Routine (Double A-Arm)

Inputs: F_{xui} , F_{yui} , F_{zui} , δ_i , S_{xi} , S_{yi} , S_{zi}

h_i , $(\cos\alpha_{hi}$, $\cos\beta_{hi}$, $\cos\gamma_{hi})$

Outputs: $N_{\varphi ui}$, $N_{\theta ui}$, $N_{\psi ui}$, F_{zui}

Parameters: front: z_F , T_F , a

rear: z_R , T_R , -b

Equations:

Front:

$$\left.\begin{aligned} N_{\varphi ui} &= -F_{yui}(z_F+\delta_i+h_i\cos\gamma_{hi})+(-1)^i \frac{T_F}{2} S_i \\ N_{\theta ui} &= F_{xui}(z_F+\delta_i+h_i\cos\gamma_{hi})+S_{zi}\, a \\ N_{\psi ui} &= (-1)^i F_{xui}(\frac{T_F}{2} + h_i \cos\beta_{hi})+F_{yui}(a+h_i\cos\alpha_{hi}) \end{aligned}\right\}$$

All forces propagate vert. through springs

Rear:

$$\begin{aligned} N_{\varphi ui} &= -F_{yui}(z_R+\delta_i+h_i\cos\gamma_{hi}) +(-1)^i \frac{T_R}{2} S_{zi} \\ N_{\theta ui} &= F_{xui}(z_R+\delta_i+h_i\cos\gamma_{hi})+S_{zi}(-b) \\ N_{\psi ui} &= (-1)^i F_{xui} (\frac{T_R}{2} + h_i\cos\beta_{hi})+F_{yui}(-b+h_i\cos\alpha_{hi}) \end{aligned}$$

This routine must set $F_{zui} = 0$ since all suspension forces propagate only through the springs.

Preceding page blank