AD 742254

PREPARED FOR THE
DEPARTMENT OF THE ARMY
Contract DAHC19-69-C-0017

DISTRIBUTION STATEMENT
Approved for public release;
distribution unlimited.

RAC-TP-445
FINAL DRAFT
OF VOL II

JANUARY 1972

A Methodology for Optimal Planning over Time

Volume II
Appendices A, B, C, D, and E in Support of Volume I

by Charles A. Allen
Beverly D. Causey
James E. Falk
Ronald G. Magee
Charles W. Mylander
Ronald New, *Project Director*
John D. Pearson
Philip D. Robers

FINAL DRAFT

D D C
MAY 29 1972
C

Copy 21 of 165

VOL #1 = AD742251

Reproduced by
NATIONAL TECHNICAL
INFORMATION SERVICE
Springfield, Va. 22151

RAC Research Analysis Corporation

283

DISCLAIMER NOTICE

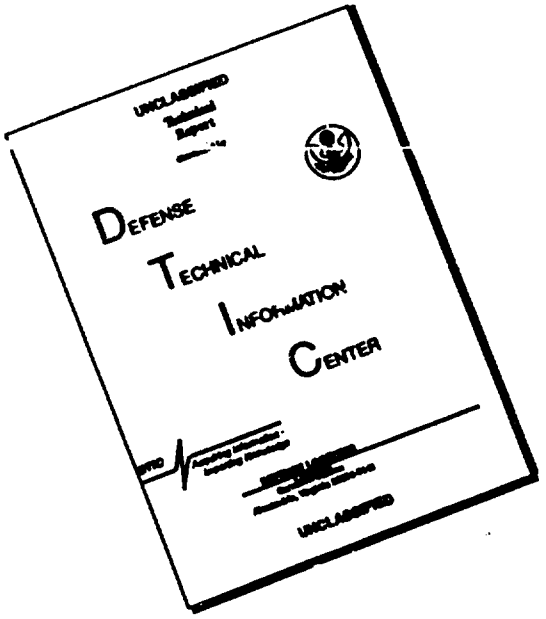

THIS DOCUMENT IS BEST QUALITY AVAILABLE. THE COPY FURNISHED TO DTIC CONTAINED A SIGNIFICANT NUMBER OF PAGES WHICH DO NOT REPRODUCE LEGIBLY.

The findings in this report are not to be construed as an official Department of the Army position unless so designated by other authorized documents.

ACCESSION for
CFSTI WHITE SECTION ☑
DDC BUFF SECTION ☐
UNANNOUNCED ☐
JUSTIFICATION .....
.....
BY .....
DISTRIBUTION/AVAILABILITY CODES
DIST. AVAIL. and/or SPECIAL
A

UNCLASSIFIED

Security Classification

DOCUMENT CONTROL DATA - R&D

(Security classification of title, body of abstract and indexing annotation must be entered when the overall report is classified)

1. ORIGINATING ACTIVITY *(Corporate author)* RESEARCH ANALYSIS CORPORATION	2a. REPORT SECURITY CLASSIFICATION none 2b GROUP N/A

3. REPORT TITLE

A Methodology for Optimal Planning Over Time, Volume II, Appendices A,B,C,D,&E

4. DESCRIPTIVE NOTES *(Type of report and inclusive dates)*

Technical Paper

5. AUTHOR(S) *(First name, middle initial, last name)*

Charles A. Allen
Beverly D. Causey
James E. Falk
Ronald G. Magee
Ronald New, Project Director
John D. Pearson
Philip D. Robers
Charles W. Mylander

6. REPORT DATE	7a. TOTAL NO. OF PAGES	7b. NO. OF REFS
January 1972	284	2

8a. CONTRACT OR GRANT NO. b. PROJECT NO. 011.310 c. d.	9a. ORIGINATOR'S REPORT NUMBER(S) TP-445, Final Draft of Vol II 9b. OTHER REPORT NO(S) *(Any other numbers that may be assigned this report)*

10. DISTRIBUTION STATEMENT

Approved for public release;
distribution unlimited.

11. SUPPLEMENTARY NOTES	12. SPONSORING MILITARY ACTIVITY US Army, Combat Developments Command Combat Systems Group

13. ABSTRACT

This report describes a methodology which can be used to identify the most cost-effective plan for the phase-in and phase-out of vehicle systems -- a methodology for optimal fleet planning over time. Volume I provides a systematic development of the problem structure, a qualitative description of the solution procedure, and mathematical and operational descriptions of the algorithm. Volume II provides appendices containing a demonstration problem, subroutine descriptions, program flow charts, program listings, and error message descriptions.

DD FORM 1 NOV 65 1473

UNCLASSIFIED

Security Classification

UNCLASSIFIED

Security Classification

14. KEY WORDS	LINK A ROLE	LINK A WT	LINK B ROLE	LINK B WT	LINK C ROLE	LINK C WT
branch and bound						
fleet planning						
non-convex programming						
non-linear programming						
optimization over time						
vehicle systems						

UNCLASSIFIED

Security Classification

SCIENCE AND TECHNOLOGY DEPARTMENT RAC-TP-445 FINAL DRAFT OF VOL II Published January 1972

A Methodology for Optimal Planning over Time

Volume II

Appendices A, B, C, D, and E in Support of Volume I

by

Charles A. Allen
Beverly D. Causey
James E. Falk
Ronald G. Magee
Charles W. Mylander
Ronald New, *Project Director*
John D. Pearson
Philip D. Robers

FINAL DRAFT

DISTRIBUTION STATEMENT
Approved for public release;
distribution unlimited.

Research Analysis Corporation RAC

McLean, Virginia 22101

Area Code 703
893-5900

DEPARTMENT OF THE ARMY
OFFICE OF THE CHIEF OF RESEARCH AND DEVELOPMENT
WASHINGTON, D.C. 20310

DARD-ARS

1. Volume I, "A Methodology for Optimal Planning Over Time" and Volume II, "Appendices A, B, C, D and E in Support of a Methodology for Optimal Planning Over Time - Volume I," were prepared by the Research Analysis Corporation for the Combat Systems Group, United States Army Combat Developments Command, and document RAC study 011.310, "Aircraft Systems Least Cost Phase-In." Copies of these reports are forwarded for your retention and use.

2. The methodology described in these volumes was developed to meet in part the need of the US Army to determine an optimal plan for phasing in new aircraft systems to meet its worldwide commitments yet remain within budgetary constraints. It provides to planners a tool for use in planning situations involving consideration of large numbers of alternative systems and combinations of tasks.

3. The findings in this report are not to be construed as an official Department of the Army position unless so designated by other authorized documents.

FOR THE CHIEF OF RESEARCH AND DEVELOPMENT:

STANLEY R. MEEKEN
Colonel, GS
Chief, Studies and Analyses Division

Published January 1972
by
RESEARCH ANALYSIS CORPORATION
McLean, Virginia 22101

CONTENTS

VOLUME I

SUMMARY S-1

INTRODUCTION I-1

CHAPTER 1 - PROBLEM STRUCTURE 1-1

CHAPTER 2 - A QUALITATIVE DESCRIPTION OF BRANCH AND BOUND 2-1

CHAPTER 3 - MATHEMATICAL DESCRIPTION OF PROBLEM AND ITS SOLUTION 3-1

THE CONSTRAINT SET 3-1

Materiel Balance Constraints - Consistency Constraints- Vintage Constraints - Master Variable Relation Constraints - Cost Constraints

THE OBJECTIVE FUNCTION 3-6

Primary Cost Categories - Secondary Cost Categories

THE SOLUTION PROCEDURE 3-10

Linear Envelopes - Bounding the Solution - Partitioning into Subsets - The Algorithm

CHAPTER 4 - AN OPERATIONAL DESCRIPTION OF THE BRANCH AND BOUND SOLUTION PROCEDURE 4-1

PROGRAM INTERFACING 4-1

THE MATRIX GENERATOR 4-5

Program Logic - Core Allocation - User's Subroutine (YRCOST) - Input Formats - Output Description

THE MAIN PROGRAM 4-21

Program Logic - Core Allocation - User's Subroutine (GETPHI) - Input Formats - Output Description

THE REPORT GENERATOR 4-34

Program Logic - Core Allocation - User's Subroutine (YRCOST) - Input Formats - Output Description

REFERENCES R-1

FIGURES: VOLUME I

1-1 A Typical List of Alternative Vehicle Arrays Which Could Service a Mission Group 1-1

1-2 Eight Independent Groups Each with Twenty Equally-Effective Alternatives 1-3

1-3 The Mission Group Problem 1-5

FIGURES: VOLUME I (continued)

2-1	A Concave Cost Function	2-1
2-2	Partitioning the Total Solution Set Into Subsets	2-3
3-1	Cost Function	3-11
3-2	A Linear Envelope of a Concave Function with Discontinuity at Origin	3-13
3-3	The Algorithm	3-17
4-1a	Control Cards to Execute All Programs as a Single Job	4-3
4-1b	Control Cards to Execute Programs as Separate Jobs	4-4
4-2	System Macro Flowchart	4-6
4-3	Symbolic Naming Convention	4-7
4-4	Positive Integer Code	4-8
4-5	Basic Cards	4-13
4-6	Vehicle Table	4-14
4-7	Period Table	4-15
4-8	Task Table	4-16
4-9	Deck Structure for Matrix Generator	4-20
4-10	Input Data Formats	4-27
4-11	Deck Structure for Main Program	4-30
4-12	Deck Structure for Report Generator	4-37

CONTENTS
VOLUME II

APPENDIX A - SAMPLE PROBLEM	A-1
APPENDIX B - SUBROUTINE DESCRIPTIONS	B-1
APPENDIX C - FLOWCHARTS	C-1
APPENDIX D - PROGRAM LISTING	D-1
APPENDIX E - ERROR MESSAGES	E-1
GLOSSARY	G-1
REFERENCES	R-1

FIGURES: VOLUME II

A-1	Alternative Fleet Mixes for 1972	A-1
A-2	Capital Equipment (Truck) Requirements as a Function of Time	A-2
A-3	The Simplified Objective (cost) Function for the Sample Truck Problem	A-4
A-4	The Sample Problem Data Deck for the GENLCP Program	A-8
A-5	GENLCP Output For Sample Problem, Parts (a) - (f)	A-10
A-6	The Sample Problem Data Deck For the BECAV2 Program	A-17
A-7	A Branching Tree For the Sample Problem	A-19
A-8	The Sample Problem Data Deck For the REPGEN Program	A-20
A-9	REPGEN Output For Sample Problem, Parts (a) and (b)	A-21
A-10	A Sample Optimal Plan For the Ace Trucking Company	A-24

APPENDIX A

A SAMPLE PROBLEM

We have chosen a relatively small sample problem to illustrate an implementation of the branch-and-bound algorithm and its corresponding program. We will structure the problem from a user's viewpoint, formulate the objective function and the constraint set, illustrate the preparation of the data decks and user's subroutines, and explain the logic of the results. The problem to be described here has been discussed in a previous document.[4]

The Ace Trucking Co., in planning for next year's workload, estimates that the company can serve its customers with a fleet of 67 light trucks and 16 cross-country trailers. An alternative fleet was also considered consisting of 43 light and 20 medium sized trucks, together with only 7 cross-country trailers. Finally, the only other practical alternative considered was a mix of 42 medium trucks and 12 of the big trailers. The medium trucks, however, are of a new design and will not be available for next year unless the company is willing to pay a substantial premium. At first it appeared that choosing one of these three alternative fleets (shown in table form below) was

	light trucks	medium trucks	trailers
Alternative #1	67	—	16
Alternative #2	43	20	7
Alternative #3	—	42	12

Figure A-1 ALTERNATIVE FLEET MIXES FOR 1972

the only decision issue. However, it soon became clear to the planning group at Ace Trucking Co. that the investment decision should also depend on the utilization of the trucks in subsequent years, in addition to that utilization planned for the next year. And furthermore, the existing fleet of trucks was far from obsolete, even though maintenance costs on some of the older vehicles were beginning to climb. Realizing these factors, the planning group estimated the workload for their trucks over the next three years (beyond which they could not be confident of their estimates), and then prepared a requirements table like that in Figure A-2 below.

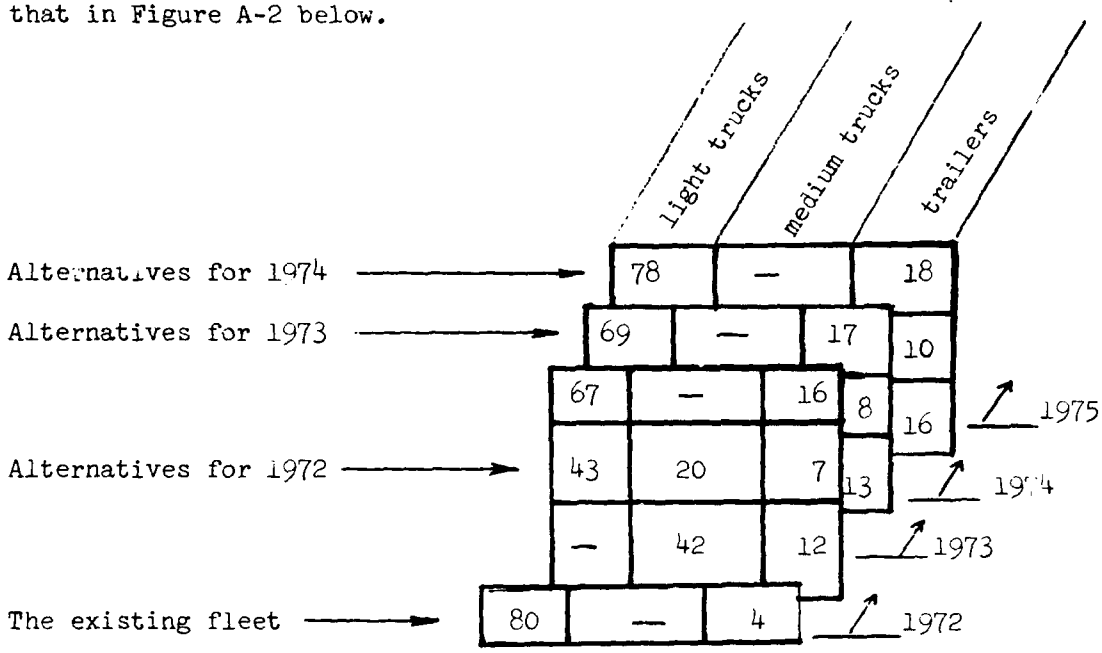

Figure A-2 CAPITAL EQUIPMENT (TRUCK) REQUIREMENTS AS A FUNCTION OF TIME

The existing fleet did not include any medium sized trucks; 60 light trucks were two years old, but the remaining 20 were purchased only last year. The inherited trailers were also two years old. Finally, based on the projected cash flow position of Ace for the next three years, it was decided that a limit (cost constraint) be placed on new truck procurements for each of the three years.* Decision time for Ace

* Costs constraints were not imposed on this problem in the previous referenced description;[6] hence, a slightly different solution was obtained.

Trucking Co. is January 1/72, and the question is: what is the optimal plan over the next three-year period?

Initially, one should ask: how many alternative plans exist? If we permute three alternatives per year with three years, we develop 27 alternative plans — but this number ignores all permutations of the existing fleet as well as all concern for the "welfare" of the inherited fleet from year to year. In addition, there are questions like "buy" or "lease," ... "sell," "salvage," or "store," etc., making the number of alternative plans very large indeed (literally thousands even in this trivial problem). In fact, for real-world problems, it would not be atypical to have millions of possible alternative plans confronting the decision-maker, each involving a maze of cost factors — making evaluation of each and every plan rather impractical. Problems like this can be solved efficiently, without evaluating each and every alternative, using the mathematical programming techniques embodied within the Falk-Soland Algorithm.[2]

The objective function for this problem is developed from the general form of Fig. 2-1 (page 2-11) plus projected estimates of the cost coefficients for each cost category. We have only three vehicles under consideration but we artificially introduce a fourth vehicle (and call it MEDIUM*) to account for the premium charge if we buy MEDIUM trucks for the first year (1/72). That is, the program will treat the purchase of MEDIUM trucks and MEDIUM* trucks separately, as if they were distinct. In figure A-3 we show the reduced form of the objective function. Note that,

(1) There is only one (possible) R&D charge and that is associated with the MEDIUM* vehicles (called vehicle No. 1; the LIGHT, MEDIUM, and TRAILERS are numbered 2, 3, and 4, respectively.

(2) We use $\underline{k}$ increase in operating cost over time (for simplicity), hence, we drop the second subscript in the c coefficients as well as the summation over k.

(3) We have introduced the specific values for the number of vehicles (N=4) and the length of the planning period (T=3) where they appear in Figure A-3.

$$\varphi(x) = U_1(x_1) + \sum_{j=1}^{4} a_j x_j^{b_j} + \sum_{j=1}^{4}\sum_{\ell=1}^{3} (-d_{j\ell}) s_{j\ell}$$

R&D Costs — Procurement Costs — Savings due to mothballing of unneeded vehicles

$$+ \sum_{j=1}^{4}\sum_{\ell=K_j}^{0}\sum_{m=1}^{3} c_j w_{j\ell m} + \sum_{j=1}^{4}\sum_{\ell=1}^{3}\sum_{m=\ell}^{3} c_j x_{j\ell m}$$

Operating and maintenance cost

(inherited fleet) (purchased fleet)

$$+ \sum_{j=1}^{4}\sum_{\ell=K_j}^{0}\sum_{m=0}^{2} (-e_{j,(m-\ell+1)}) w_{j\ell m} + \sum_{j=1}^{4}\sum_{\ell=1}^{3}\sum_{m=\ell}^{3} (-e_{j,(m-\ell+1)}) x_{j\ell m}$$

Savings resulting from vehicle salvage

(inherited fleet) (purchased fleet)

$$+ \sum_{j=1}^{4}\sum_{\ell=K_j}^{0} (-f_{j,(4-\ell)}) w_{j\ell 3} + \sum_{j=1}^{4}\sum_{\ell=1}^{3} (-f_{j,(4-\ell)}) x_{j\ell 3}$$

Savings due to crediting the value of fleet owned at the end of the planning period

(inherited fleet) (purchased fleet)

Fig A3 - The Simplified Objective (cost) Function For the Sample Truck Problem

The constraint set is developed from the general descriptions given in Chapter 3 (starting on p. 3-1).
The material balance constraints become:

$$\sum_{\ell'=K_j}^{0} \sum_{m=\ell}^{3} w_{j\ell'm} + \sum_{\ell'=1}^{\ell} \sum_{m=\ell}^{3} x_{j\ell'm} = \sum_{i \in M_\ell} \sum_{k=1}^{R_{i\ell}} u_{ijk\ell}\, p_{ik\ell} + s_{j\ell}$$

$$j = 1, 2, 3, 4$$
$$\ell = 1, 2, 3$$

Note that we have assumed no attrition ($v_{\ell-\ell'} = 1$), and have assigned the $t_{i\ell}$ factor = 1 for all mission groups.
The consistency constraints reduce to:

$$\sum_{k=1}^{R_{i\ell}} p_{ik\ell} = 1; \ \ell = 1, 2, 3 \text{ and } i = 1, 2, 3$$

The vintage constraints for the light trucks and trailers are:

$$W_{j\ell} = \sum_{m=o}^{9+\ell} w_{j\ell m}; \ j = 2, 4 \text{ and } \ell = -1, 0$$

where L_j has been replaced by 10 subperiods (years) for all vehicles and K_j by -1 for both inherited vehicles.
The master variable constraints are simply:

$$x_j = \sum_{\ell=1}^{3} \sum_{m=\ell}^{3} x_{j\ell m}; \ \ j = 1, 2, 3, 4$$

Finally, since we have chosen to introduce cost constraints, we have

$$H_\ell = \sum_{j=1}^{4} a_j^o \sum_{m=\ell}^{3} x_{j\ell m} + P_\ell - P_{\ell-1}$$

We (i.e., Ace Trucking Co.) will set the cost constraint, H_ℓ = \$150,000., \$250,000., and \$300,000., for the three years of the planning period, respectively. The linear approximation a_j^o, to the procurement cost function will be selected after inspection of the actual cost vs. quantity curve.

A careful inspection of the total constraint set for this problem will indicate a total of 24 constraints (recall that there is no materiel balance constraint for [ℓ=1, j=3] and no vintage constraint for [j=4, ℓ=0]). Similiarly, a count of the number of variables (being careful to delete those which must equal zero because of specific exclusions in this sample problem) will indicate a total of 60. The reader will note that the GENLCP Program automatically computes and prints these totals for use in the BBCAV 2 Program.

We are now ready to prepare the data decks and user subroutines. The user subroutine GETPHI is shown in the program listing on page D-32 . It is here that we describe the R&D and procurement equations for the four vehicles in the sample problem. Note that vehicle No. 1 (MEDIUM*) has an R&D (premium) charge of \$300,000.* — the other three vehicles have no R&D charge and their procurement costs are simply described by concave functions of the form ax^b. Of course, other forms of concave functions could have been used.

---

* We have chosen to scale <u>all</u> costs by 10^6. This means that all final cost data should be multiplied by 10^6.

The only other user subroutine YRCOST (see page D-19) is prepared for use in the GENLCP program, then duplicated for use in REPGEN. As described previously on p. 4-10 of chapter 4, YRCOST is used to calculate the operating, mothballing, salvage, and truncation cost coefficients, c_{jk}, $d_{j\ell}$, e_j, $(m-\ell+1)$ and f_j, $(Y-\ell+1)$ respectively. For our sample problem, we use no increase in operating cost overtime (R=0.); a mothballing savings factor of R1 = 0.9; a salvage savings factor of alpha = 0.5; and truncation savings based upon a linear decay from an estimate of the purchase cost (input through the GENLCP data deck) and an assumed 10 year lifetime for each vehicle.

The data deck for the GENLCP program can now be prepared (see figure A-4).

In entry (card image) No. 1 we give the problem title, the first and last year of the planning period, and then specify the four vehicle tables, three task tables, and five period tables — the first two of which are inherited periods. Entry 2 is the VEHICLE header card for the first vehicle. Entry 3 describes the first vehicle as LIGHT, indicates an availability date of 1970 (i.e. an inherited vehicle) and finally a ten year vehicle lifetime. Entry 4 indicates that 60 light vehicles were purchased in 1970 and 20 light vehicles were purchased in 1971. Entry 5 indicates a $3,000. purchase cost estimate for purposes of calculation of the truncation and salvage value, a ten year operating cost of $120,000., zero R&D cost for the light vehicle, zero attrition for the light vehicle, and finally an estimated linear purchase cost coefficient of $3,000., respectively. This linear purchase cost coefficient estimate was based upon a study of the corresponding <u>non-linear</u> procurement equation for the light vehicle. In general, one should choose the cost coefficient (slope of the straight line) such that the straight line intersects the non-linear curve at or about the <u>estimated</u> solution value. The consequences of a poor estimate will be described shortly. Entries 6 through 15 simply complete the vehicle tables. Entries 16 through 31 describe the period tables. The first two periods (1970 and 1971) are inherited periods. In period 1972 we indicate a cost constraint of $150,000. in entry 21. Entry 22 specifies that there exists only one task in 1972 and its scale factor is 1.0.

```
SAMPLE      1972 1974     4     3     5
VEHICLE
LIGHT     1970        10
            60          20
         .003        .12          0.0         1.0         .003
VEHICLE
MEDIUM*  1972        10
         .006        .14          .200        1.0         .006
VEHICLE
MEDIUM   1973        10
         .006        .14          0.          1.0         .006
VEHICLE
TRAILER  1970        10
            4
         .01         .16          0.          1.0         .012
PERIOD
1970 1971
PERIOD
1971 1971
PERIOD
1972 1972    .15
            1          1.0
      1  1.0
PERIOD
1973 1973    .25
            1          1.0
      2  1.0
PERIOD
1974 1974    .3
            1          1.0
      3  1.0
TASK
            1          2          3
LIGHT       MEDIUM*    TRAILER
67.0        0.0        16.0
43.0        22.0       7.0
0.0         42.0       13.0
TASK
            2          4          5
LIGHT       MEDIUM*    MEDIUM     TRAILER
68.0        0.0        0.0        17.0
45.0        22.0       0.0        8.0
0.0         45.0       0.0        13.0
45.0        0.0        22.0       8.0
0.0         0.0        45.0       13.0
TASK
            2          4          5
LIGHT       MEDIUM*    MEDIUM     TRAILER
78.0        0.0        0.0        18.0
48.0        24.0       0.0        10.0
0.0         50.0       0.0        16.0
48.0        0.0        24.0       10.0
0.0         0.0        50.0       16.0
ENDTABLE
```

Reproduced from best available copy.

Fig. A-4 The Sample Problem Data Deck for the GENLCP Program

The remaining entries in the period tables should be self explanatory. The task tables are input next. Entry 33 specifies that task No. 1 will have three vehicles and three alternatives. Entries 34 through 37 input the alternative set for the first year of the planning period (compare with the figure A-2). The alternative sets for the second and third years of the planning period follow. Note that because of the introduction of the artificial MEDIUM* vehicle, the complete set of permutations yield five distinct alternatives instead of the original three. This data deck ends with an ENDTABLE card in entry 54.

We now run (process) the GENLCP program and obtain the printout of Figure A-5; parts (a) through (f). Part (a) simply prints out some input information for checking purposes, and reorders the vehicles according to the magnitude of the R&D charge; note, in this regard, that the MEDIUM* truck is "called" vehicle No. 1 (X01) since <u>it</u> has the R&D charge.

In the first section of Part (b), a summary of the constraint equations for this sample problem is listed; the row type (E for equality and N for free), then the row name is printed in accordance with the symbolic naming convention of Fig. 4-3. The second section of part (b), and continuing in part (c), lists the variable, the columns in which it appears, and its corresponding coefficient. Similiarly, the last section, labeled RHS, gives a summary of those rows (constraint equations) which have non-zero right-hand-sides.

Part (d) provides a cross-reference list of variable number versus variable name for use in the interpretation of the output from the BBCAV2 program. The last section of part (d) indicates that there are 25 rows and 61 columns in this sample problem. Note that in each case these are one more than was indicated previously because the cost row and the right hand side variable, respectively are now included. Finally the upper bounds, computed by the GENLCP program, are listed for the master variables; the minus sign here is superfluous.

Part (e) prints a cost summary on each vehicle along with the components of the inherited fleet. Then in the last section of part (e) and continuing in part (f), the task (alternative) tables are reproduced.

```
 GENERATING THE MATRIX FOR THE LEAST COST PHASE-IN PROBLEM

FILENAME= SAMPLE   STARTING YEAR = 1972 LAST YEAR = 1974
WILL INPUT  4 VEHICLE TABLES, AND  3 TASK TABLE, AND  5 PERIOD TABLES.

 READING IN A VEHICLE TABLE
LIGHT            1970        10

 READING IN A VEHICLE TABLE
MEDIUM*          1972        10

 READING IN A VEHICLE TABLE
MEDIUM           1973        10

 READING IN A VEHICLE TABLE
TRAILER          1976        10

 READING IN A PERIOD TABLE
1970 1970

 READING IN A PERIOD TABLE
1971 1971

 READING IN A PERIOD TABLE
1972 1972

 READING IN A PERIOD TABLE
1973 1973

 READING IN A PERIOD TABLE
1974 1974

 READING IN A TASK TABLE
        1          3          3

 READING IN A TASK TABLE
        2          4          5

 READING IN A TASK TABLE
        3          4          5

   VEHICLE NAME     VARIABLE NAME
       OPTIONAL R+D VEHICLES
     MEDIUM*        X01
            OTHER VEHICLES
     LIGHT          X02
     MEDIUM         X03
     TRAILER        X04
```

Fig A-5(a) GENLCP Output For Sample Problem

```
NAME          SAMPLE
ROWS
* E  SUMX01
* E  SUMX02
* E  SUMX03
* E  SUMX04
* E  PC01
* E  PC02
* E  PC03
* E  IW02P01
* E  IW02P00
* E  IW04P01
* E  X01P01
* E  X02P01
* E  X04P01
* E  T01P01
* E  X01P02
* E  X02P02
* E  X03P02
* E  X04P02
* E  T02P02
* E  X01P03
* E  X02P03
* E  X03P03
* E  X04P03
* E  T03P03
* N  COST
COLUMNS
*          (PARTIAL LISTING)
*     X01        SUMX01        -1.0000
*     X02        SUMX02        -1.0000
*     X03        SUMX03        -1.0000
*     X04        SUMX04        -1.0000
*     P01        PC01           1.0000
*     P01        PC02          -1.0000
*     P02        PC02           1.0000
*     P02        PC03          -1.0000
*     P03        PC03           1.0000
*     W02M100    COST           -.0108
*     W02M100    IW02P01        1.0000
*     W02M101    COST            .0116
*     W02M101    IW02P01        1.0000
*     W02M101    X02P01        -1.0000
*     W02M102    COST            .0238
*     W02M102    IW02P01        1.0000
*     W02M102    X02P01        -1.0000
*     W02M102    X02P02        -1.0000
*     W02M103    COST            .0345
*     W02M103    IW02P01        1.0000
*     W02M103    X02P01        -1.0000
*     W02M103    X02P02        -1.0000
*     W02M103    X02P03        -1.0000
*     W02M110    COST            -.0015
*     W02M110    IW02P00        1.0000
*     W02M111    COST            .0112
*     W02M111    IW02P00        1.0000
*     W02M111    X02P01        -1.0000
*     W02M112    COST            .0235
*     W02M112    IW02P00        1.0000
*     W02M112    X02P01        -1.0000
*     W02M112    X02P02        -1.0000
```

Fig A-5(b) GENLCP Output For Sample Problem

```
*    W020003    COST          .0342
*    W020003    IW02P00      1.0000
*    W020003    X02P01      -1.0000
*    W020003    X02P02      -1.0000
*    W020003    X02P03      -1.0000
*    W04M100    COST         -.0025
*    W04M100    IW04PM1      1.0000
*    W04M101    COST          .0147
*    W04M101    IW04PM1      1.0000
*    W04M101    X04P01      -1.0000
*    W04M102    COST          .0314
*    W04M102    IW04PM1      1.0000
*    W04M102    X04P01      -1.0000
*    W04M102    X04P02      -1.0000
*    W04M103    COST          .0430
*    W04M103    IW04PM1      1.0000
*    W04M103    X04P01      -1.0000
*    W04M103    X04P02      -1.0000
*    W04M103    X04P03      -1.0000
*    P030103    X02P03      78.0000
*    P030103    X04P03      18.0000
*    P030103    T03P03       1.0000
*    P030203    X01P03      24.0000
*    P030203    X02P03      48.0000
*    P030203    X04P03      10.0000
*    P030203    T03P03       1.0000
*    P030303    X01P03      50.0000
*    P030303    X04P03      16.0000
*    P030303    T03P03       1.0000
*    P030403    X02P03      48.0000
*    P030403    X03P03      24.0000
*    P030403    X04P03      10.0000
*    P030403    T03P03       1.0000
*    P030503    X03P03      50.0000
*    P030503    X04P03      16.0000
*    P030503    T03P03       1.0000
*    X010303    SUMX01       1.0000
*    X010303    X01P03      -1.0000
*    X010303    PC03          .0060
*    X010303    COST          .0086
*    X020303    SUMX02       1.0000
*    X020303    X02P03      -1.0000
*    X020303    PC03          .0030
*    X020303    COST          .0093
*    X030303    SUMX03       1.0000
*    X030303    X03P03      -1.0000
*    X030303    PC03          .0060
*    X030303    COST          .0086
*    X040303    SUMX04       1.0000
*    X040303    X04P03      -1.0000
*    X040303    PC03          .0120
*    X040303    COST          .0070
*RHS
*    RHS1       PC01          .1500
*    RHS1       PC02          .2500
*    RHS1       PC03          .3000
*    RHS1       IW02PM1      60.0000
*    RHS1       IW02P00      20.0000
*    RHS1       IW04PM1       4.0000
*    RHS1       T01P01       1.0000
*    RHS1       T02P02       1.0000
*    RHS1       T03P03       1.0000
*ENDATA
```

Fig A-5(c) GENLCP Output for Sample Problem

REFERENCE LIST FOR COLUMN NUMBERS AND NAMES

00000004-40,0400040000040

1	X01	2	X02	3	X03	4	X04	5	P01
6	P02	7	P03	8	W02M100	9	W02M101	10	W02M102
11	W02M103	12	W020000	13	W020001	14	W020002	15	W020003
16	W04M100	17	W04M101	18	W04M102	19	W04M103	20	P010101
21	P010201	22	P010301	23	X010101	24	X010102	25	X010103
26	S0101	27	X020101	28	X020102	29	X020103	30	S0201
31	X040101	32	X040102	33	X040103	34	S0401	35	P020102
36	P020202	37	P020302	38	P020402	39	P020502	40	X010202
41	X010203	42	S0102	43	X020202	44	X020203	45	S0202
46	X030202	47	X030203	48	S0302	49	X040202	50	X040203
51	S0402	52	P030103	53	P030203	54	P030303	55	P030403
56	P030503	57	X010303	58	X020303	59	X030303	60	X040303
61	RHS1								

IMPORTANT DATA ITEMS FOR INPUT TO BGCAVLP

NUMBER OF ROWS (INCLUDING COST) IS 25

NUMBER OF COLUMNS (INCLUDING RHS) IS 61

UPPER BOUNDS FOR VEHICLES IN ORDER FROM X1 THRU XN ARE

-137.0000

-214.0000

-95.0000

-51.0000

Fig A-5 d) GEILCP Output For Sample Problem

VEHICLE NAME	VARIABLE NAME	SAL/TRUNC COST	O AND M COST	R AND D COST	RETENTION RATE	YEAR FIRST AVAILABLE	LIFE IN YEARS
MEDIUM*	X01	.0060	.1400	.3000	1.0000	1972	10
LIGHT	X02	.0030	.1200	0.0000	1.0000	1970	10
MEDIUM	X03	.0060	.1400	0.0000	1.0000	1973	10
TRAILER	X04	.0100	.1600	0.0000	1.0000	1970	10

COMPONENTS OF THE INHERITED FLEET

	1970	1971
NUMBER OF X02	60	20
NUMBER OF X04	4	-0

TASKS REQUIRED IN PERIOD FROM 1972 THROUGH 1972

TASK 01 - PERFORMED BY 1.00 FORCE ELEMENT(S), WITH SCALE FACTOR EQUAL 1.000

* VARIABLE ******** ALTERNATIVE	X01	X02	X04	X
1	0	67	16	
2	20	43	7	
3	42	0	12	

Fig A-5(e) GENLCP Output For Sample Problem

The reader should note that very little near new information is produced by the GENLCP program — for the most part, GENLCP merely formats, reorders, checks, and performs bookkeeping operations in preparation for entry to the BBCAV2-REPGEN algorithm.

The first data deck for the BBCAV2-REPGEN algorithm is prepared as illustrated in figure A-6. We first assign a solution name in entry 1. The first, second, fourth and fifth fields of entry 2 are omitted as described on page 4-26. The third field in entry 2 indicates that there are four concave cost functions. The zero in the sixth field suppresses printing of the subroutine calls; the 1 in field No. 7 prints a listing of the primal iterations of each linear program; and the 1 in field No. 8 prints the entire set of LP solutions. Fields 9 and 10 are the standard specifications for the size of the array BLIST. The 1 in field No. 11 prints the column numbers and their corresponding values for each node. The last field, set to 20, establishes the limit on the number of nodes that will be evaluated prior to termination.

Entry 3 has four fields which establish (1) a tolerance factor of 0.005 (i.e., the solution will be within one-half of one percent of the theoretical optimum), (2) a program time limit of 90.0 seconds prior to termination (the solution to the sample problem actually used only 48 central processor seconds), (3) that no initial solution (basis) will be input, and (4) that we wish to obtain a detailed output. The second data deck for the BBCAV2-REPGEN algorithm is prepared as illustrated in figure A-8. As discussed on p. 4-35, the REPGEN data deck is very easy to prepare since most cards are duplicates of the GENLCP data deck. After the title card, the vehicle tables are inserted with cards of type 2 deleted. The period tables come next using only the header cards and cards of type 1. Note that the period designators have been inserted on all cards of type 1 in columns 11 and 12. The ENDTABLE card in entry 24 ends the data deck.

When the BBCAV2 program in the BBCAV2-REPGEN packet is loaded and processed, the printed output gives complete information vis-à-vis the optimal solution as well as all intermediate nodal solutions. The printout is long and involved and is in a coded format. The REPGEN program in the BBCAV2-REPGEN packet will decode the BBCAV2 output and

```
1 SAMPLE---SIMPLE TRUCK PROBLEM---OPTIMAL
2                 4                 0     1     1     25    131    1    20
3       0.005       90.0       0.0        1.0
```

Fig. A-6 The Sample Problem Data Deck For the BBCAV2 Program

present all essential information, hence, we neither present nor discuss the BBCAV2 output. After some experience with these programs, the user may suppress all intermediate information if he so desires. We do present here a branching tree (like that of Fig. 2-2b) to lend further clarity to the intermediate solution.

The "tree" of intermediate solutions (see Fig. A-7) is illustrative of the iteration process of the branch-and-bound algorithm. Node #1 represents a complete linearization of the non-linear problem and establishes the first reference solution, $\phi(x^1) = 3.03$ million dollars. A lower bound to all solutions, $f(x^1)$, is also determined and equals 2.72 million dollars. The branching rule is then applied and variable #1 is selected, at the branching value of X01 = 10. The linear programs associated with node #'s 2 and 3 are then evaluated. Node #2 yields a better reference solution of $\phi(x^2) = 2.82$. Node #3 is found to contain no better solution than $\phi(x^2)$ because $f(x^3) > \phi(x^2)$, hence node #3 need no longer be considered. The next best branching variable is #4, at a value of X04 = 12. The linear solutions to nodes 4 and 5 yield identical results, indicating a solution at the bound. The process terminates here because the smallest lower bound is within one-half of one percent of the current reference solution. Detailed information regarding the optimal (and final) solution is obtained through the REPGEN program.

REPGEN in the BBCAV2-REPGEN algorithm is then processed resulting in the output of figure A-9, parts (a) and (b). Part (a) contains an overall COST INFORMATION summary together with a breakdown of the number of PURCHASED RESOURCES (vehicles). Part (b) illustrates a breakdown of the STORED (mothballed) RESOURCES and the TOTAL RESOURCES USED by period. From these tabulated results, we have constructed a bar chart in figure A-10 to better illustrate the optimal solution. In this display, the results of a cost minimization over time are illustrated by a bar for each year and each vehicle. The height of the bar is a measure of how

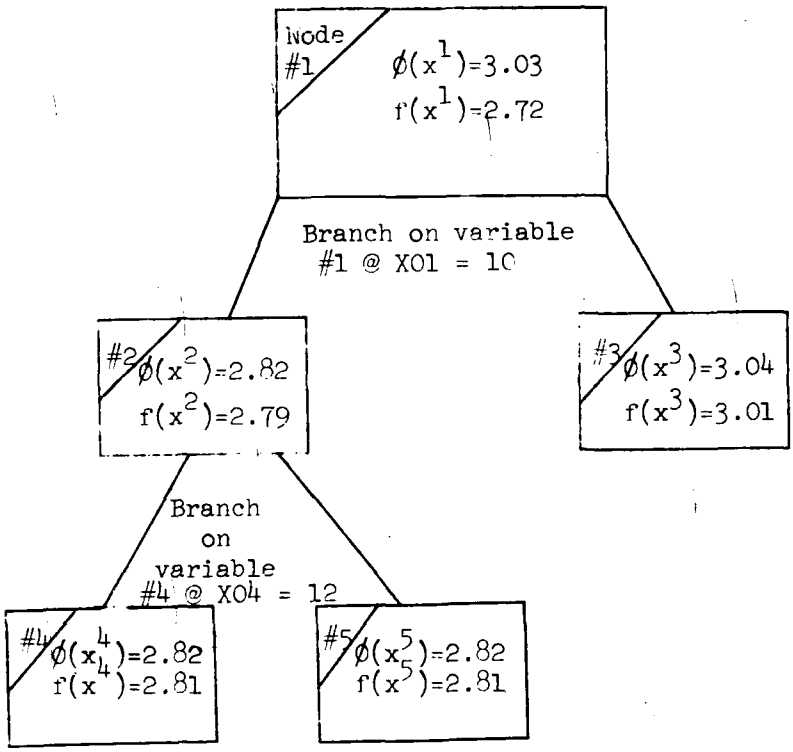

$\phi(x^i)$ = the actual (non-linear) solution for node i.

$f(x^i)$ = the lower bound (linear) solution for node i.

Figure A-7 A Branching Tree for the Sample Problem

```
1   SAMPLE      1972 1974    4    3    5
2   VEHICLE
3   MEDIUM*  1972       10
4          .006       .14          .30        1.0        .006
5   VEHICLE
6   LIGHT    1970       10
7          .003       .13          .0         1.0        .003
8   VEHICLE
9   MEDIUM   1973       10
10         .006       .14          0.         1.0        .006
11  VEHICLE
12  TRAILER  1970       10
13         .010       .16          0.         1.0        .012
14  PERIOD
15  1970 1970 01
16  PERIOD
17  1971 1971 00
18  PERIOD
19  1972 1972 01.15
20  PERIOD
21  1973 1973 02.25
22  PERIOD
23  1974 1974 03.3
24  ENDTABLE
```

Figure A-8 The Sample Problem Data Deck For The REPGEN Program

many vehicles were selected — the color black indicates vehicles existing or retained — a dotted section indicates vehicles purchased — a blank section indicates vehicles stored (mothballed) for later use. One can observe the trend toward a fleet of only medium trucks and trailers (perhaps because of the high labor costs of operating so many light trucks). The MEDIUM* trucks are not chosen for 1972 because of the high purchase cost for early delivery. The slack is taken up by a large purchase of trailers in this first year; the trailers are needed in the later years anyway. Storage of a few trailers is indicated in 1973.

SAMPLE---SIMPLE TRUCK PROBLEM---OPTIMAL

COST INFORMATION

	R AND D	PROCUREMENT	OPERATING	SALVAGE	TOTAL
PERIOD 01		.112	1.060	.019	1.152
PERIOD 02		.199	.856	.026	1.029
PERIOD 03		.034	.956	.001	.989
TOTAL	0.000	.345	2.872	.047	3.170

TRUNCATION VALUE FOR RESOURCES = .348

SAMPLE---SIMPLE TRUCK PROBLEM---OPTIMAL

PURCHASED RESOURCES

	MEDIUM	LIGHT	MEDIUM	TRAILER
PERIOD 01	0.000	0.000	0.000	12.000
PERIOD 02	0.000	0.000	42.667	0.000
PERIOD 03	0.000	0.000	7.333	0.000
TOTAL	0.000	0.000	50.000	12.000

Fig. A - 9(a) REPGEN Output For Sample Problem

SAMPLE---SIMPLE TRUCK PROBLEM---OPTIMAL

STORED RESOURCES

	MEDIUM	LIGHT	MEDIUM	TRAILER
PERIOD 01	0.000	0.000	0.000	0.000
PERIOD 02	0.000	0.000	0.000	2.793
PERIOD 03	0.000	0.000	0.000	0.000

SAMPLE---SIMPLE TRUCK PROBLEM---OPTIMAL

TOTAL RESOURCES USED

	MEDIUM	LIGHT	MEDIUM	TRAILER
PERIOD 01	0.000	67.000	0.000	16.000
PERIOD 02	0.000	3.578	42.667	13.207
PERIOD 03	0.000	0.000	50.000	16.000

Fig. A - 9(b) REPGEN Output For Sample Problem

(perhaps a surprising result but, under the circumstances, a reasonable one since buying medium trucks or retaining a larger number of small trucks for this sub-period are very costly alternatives). Finally, one can observe the relatively high start-up costs due to the purchase of the entire trailer fleet in 1972, and then most of the medium truck fleet in 1973. Nevertheless, these high start-up costs yield the least total cost over the planning period.

The COST INFORMATION summary indicates a total real cost (that which must be allocated) of 3.17 million dollars. This differs from the branch-and-bound solution value of 2.82 million dollars by the truncation value; i.e., it is deemed proper to include the truncation credit for purposes of optimization, but this dollar credit (unlike salvage) is not considered to be available for other purposes. From the procurement cost summary, it would appear that none of the procurement cost constraints were binding; however, the reader should recall from p. 4-36 that these data were calculated from the linear procurement estimates and, upon close inspection of the BBCAV2 printout, one could observe a binding cost constraint in the second period. As previously intimated on page A-7, this relatively poor correlation between linear estimate and actual value (in this case in the medium vehicles) can give erroneous results.* For cases in which the discrepancy is excessively large (judged not so in this sample problem) the programs should be reprocessed with a better linear estimate. The restriction of available funds in period two is probably the cause of the retention of the light vehicles, in lieu of the purchase of the full complement of medium vehicles for that period. Finally, one should observe that the RESOURCE summaries in general contain non-integer values — a consequence of the continuum of solutions to linear programming problems. It is incumbent upon the user to provide a physically meaningful interpretation to such results — as we have done for this sample problem in figure A-10.

---

* The difficulties introduced here due to a poor linear estimate can be avoided in the future by employing a recently developed modification to the current algorithm.[5]

Figure A-10

A Sample Optimal Plan for the Ace Trucking Company

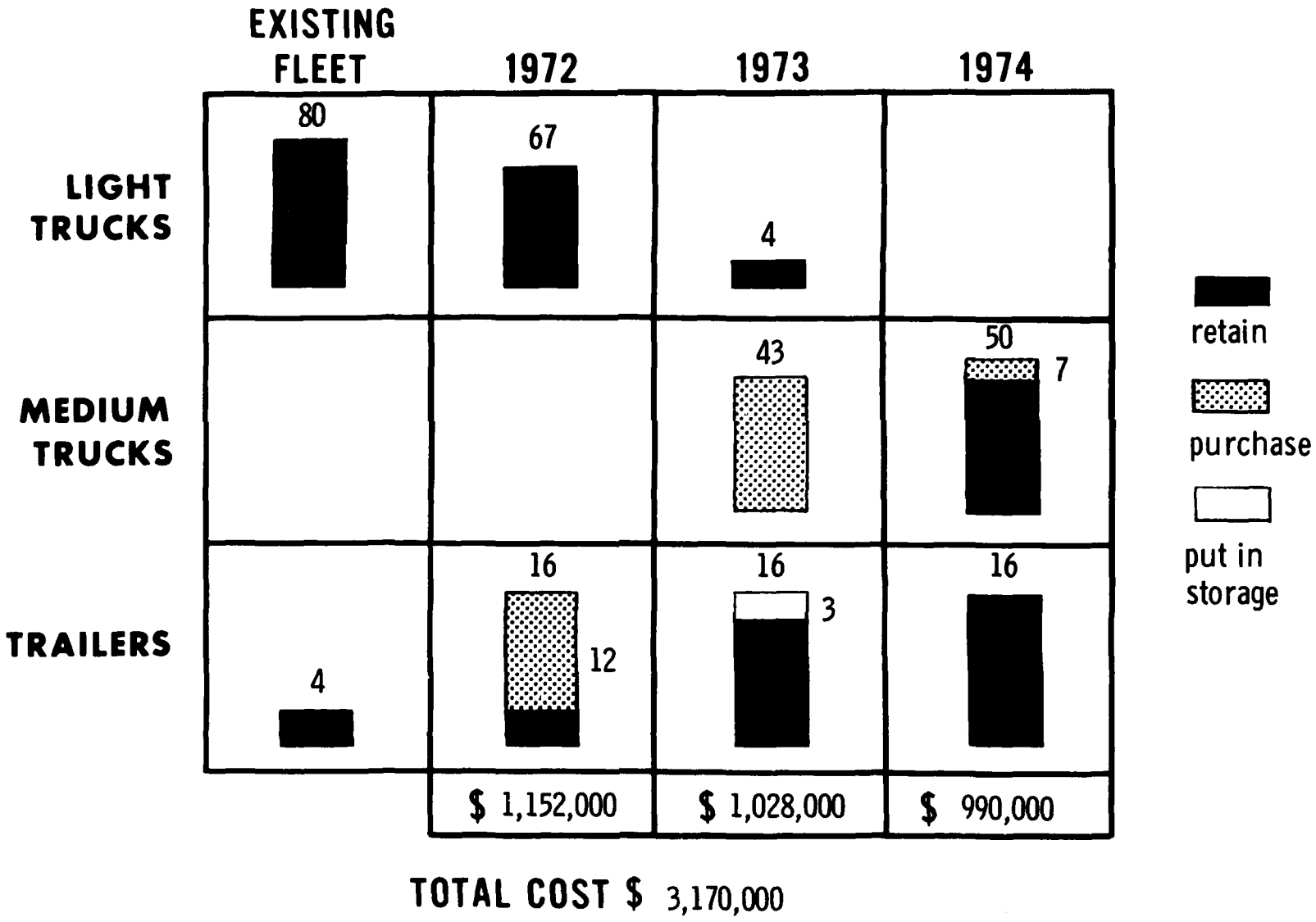

TOTAL COST $ 3,170,000

APPENDIX B

SUBROUTINE DESCRIPTIONS

APPENDIX B

MATRIX GENERATOR ROUTINE DESCRIPTIONS

GENLCP - reads and analyzes input data, creates column names and row names, determines non-zero values of the matrix of coefficients, creates the MPS360 file, and outputs the documentation listing.

YRCOST (J) - has parameter J, which is vehicle number, and determines for this vehicle all cost information (see Chapter 4 for detailed description).

YINTERP (NVR, NTR, NRY) - determines for all tasks (NTR) which of the NVR vehicles will not have been developed by the year NYR, and eliminates from those tasks all alternatives in which the "non-existent" vehicles are accomplishing something which could be done by an existing vehicle.

MATFILL (N, M) - creates from the MPS360 file the file for BBCAV2 which is an N-row by M-column matrix of coefficients, and also creates the reference list for matching column numbers and names.

MAIN PROGRAM ROUTINE DESCRIPTIONS

BBCAV2 - is the programmed implementation of the main logic structure of the branch and bound algorithm; selects node from branching tree, branches on it defining two new nodes, and determines when optimality has been achieved.

BCX1 - defines the initial node of the branching tree and establishes the problem framework in which the main program will iterate.

INITA (NCF, N, M) - reads the matrix file from tape and stores it on disk in the form acceptable to the LP; the parameters N and M define the number of columns and rows in the matrix, and the parameter NCF is the number of columns having nonlinear cost functions.

GETPHI (KFX, XPHI, PHI, SUMPHI) - evaluates the nonlinear cost functions (see Chapter 4 for a detailed description).

TABOUT (IRT) - outputs the general information concerning the node being evaluated, and if IRT = 1, also prints the nodes on the branching list.

READIN - transfers the input basis to the file which the LP uses for storing its current basis on.

NXBRN (XT, SIGMAT, NXB) - determines the best branching candidate, NXB, given the present X-vector, XT, and the node information, SIGMAT.

TIMEC - determines how long the program has been running, prints the time or interrupts depending on whether or not this time is less than the input maximum.

GETASQ (NOES, ELM, JSQ) - orders the elements of the vector ELM, of length NOES, in ascending sequence, keeping the index variable, JSQ, associated with the vector in the corresponding sequence.

GETC (KCX, BLT, ULT, CT) - determines the slope of a straight line on the cost function from the lower bound, BLT, to the upper bound, ULT, for the KCX variable and stores this in the cost vector, CT.

PRESET - initializes core storage at beginning of the algorithm.

SET (TMMAX) - initializes the time limit which is used by the routine TIMEC by adding the limit, TMMAX, to the clock time.

PARAMS - reads and stores the information on the parameter and bound cards of the input deck.

LP

LP is the linear programming system driving subroutine which directs the overall solution stages through:

SETUP - which initializes all data for the A matrix files and the solution bookkeeping.

MAPIN - which introduces any prior solution known for the problem.

INVERT - which solves the problem equations to generate the current solution represented by the basis inverse and the values of the basic and key variables in the current solution, or an artificial solution.

PRIMAL - which solves the linear programming problem.

MAPOUT - which stores the solution found and loads it into the output vectors IX and X.

LP begins with the overall common definitions for the LP system, and must be loaded first since the common statements /A/, /B/, /CORE/, /ROWTYP/, /IXX/, /XX/, /NAMES/ overwrite the smaller dimensions specified in later subroutines which can remain unchanged regardless of problem size.

AJ contains the operating core columns and the complete basis inverse B at AJ(IØRG) = B(IORG), see below.

The first stage is to specify the A matrix files IA1 - used for the A matrix less GUB rows, INPUT - used as the source of the unpacked A matrix by columns, witten in binary, one column per record, and IMAP - used by MAPOUT, MAPIN and INMAP as a file for the BCD MAP cards defining the basis, initial and/or final.

Files IA1 and IA2 are specified as blocked. Meaning that each physical disc write or read is of as many columns as the buffer sizes for IA1 and IA2 will allow, and not just one column, as actual written in FORTRAN. This considerably reduces the disc access time denoted as PP time on the CDC 6400.

NWAJ, the number of words in AJ is used to compute the number of columns available in core.

The second step is to initialize the LP calling parameters with the LP calling arguments. The matrix generator locates the cost row

ICOST as the last row MROWS which is INPUTM for the linear program common/INPUT/. The right hand side is JRHS, placed as the last column

NCOLS which is INPUTN for the common/INPUT/. The number of bounds NBDS is the number of changes NCHGS, the calling parameter, and the first NCHGS columns are bounded by BBCAV convention. The values of the bounds are in UBS.

The second stage ends with specification of LP system print and termination controls.

LP Cut-Off

STATUS terminates the program if any linear program takes longer than TMAX seconds or K5 iterations ITRN. The termination causes a MAPOUT allowing restart of the linear programming system but not necessarily BBCAV.

Diagnostic Snapshots

A snapshot of the current solution and column format can be had from XCHECK by setting K4 to

$$K4 = 1000 \times N1 + N2$$

giving a snapshot of iterations N1 through N2 inclusively. K4 = 0 suppresses XCHECK. The format is explained in the XCHECK subroutine writeup.

Print Control

This is achieved by K3.

K3 = 0 prints everything

K3 = 1 prints no LP system output except error messages.

Other values of K3 give a selective print of all or some of the respective outputs according to the prime factors of K3.

Specifically K3 should be a product of primes and

$$K3 = 2 \times 3 \times 5 \times 7 \times 11 \times 13$$

gives all print options. To obtain selective control:

1. To print the MAPIN cards as read K3 has factor 3.
2. Inversion diagnostic data from INVERT on infeasibilities of the current solution as found, the columns rejected during

an inversion or reinversion and the final infeasibility if any, K3 has factor 13.

3. MESSG prints linear programming system verb entry names and entry times and serveral messages if K3 has factor 7.
4. STATUS prints the status of the PRIMAL iterations at beginning and end of K3 has factor 11.
5. MAPOUT places a basis inverse B, IBASIS, KEYS and BETA representing Restart data sufficiant to avoid an initial invert on file INPUT if K3 has factor 2.
6. MAPOUT prints the solution status in packed format when called if K3 has factor 5.

Thus to obtain printouts of inversion diagnostics, a mapout, verb entry times and status data set K3 = 5 x 7 x 11 x 13.

The third stage of the program LP calls the system verbs listed earlier.

The basis inverse is at B(IØRG) where IØRG is M^2 words down from the end of AJ, i.e. NWAJ. The remaining space in AJ is allocated to columns of which NCRMAX can be fitted in. There must be at least 5 columns slots available, three for CHECK to retain columns and two for work space. Fifty columns are recommended

Finally MAPOUT moves the current variable state to file IMAP, the solution to INPUT, the packed variable values to IXX and XX. IXX has the indices in ascending order of non-zero variables, and XX has the corresponding values. There will be between INPUTM and INPUTM + NBDS non-zero values followed by zeros.

Variable Lengths

In /IXX/, /XX/ IXX, XX should be set to 100 or INPUTM + NBDS if larger.

In /CORE/ AJ should be big enough to take the basis inverse $(INPUTM+1-L)^2$ words plus 10 to 100 columns at (INPUTM+1-L) words each where L is the number of GUB rows.

In /ROWTYP/ IROWTP should be 100 or INPUTM+1 of larger than 100.

In / NAMES/ NAME should be 100 or INPUTN+1+S if larger, where $S \leq$ INPUTM is the number of inequalities and free rows.

In /A/ ALPHA should be 100 or INPUTM+1 if larger.

In /B/ BETA should be 100 or INPUTM+1 if larger.

All other commons are correctly sized in LP.

EXISTS

All exists from primal are via the subroutine EXISTS for the purpose of user parameter settings.

SETUP

This subroutine is the system verb which has the task of initiating the LP system when starting from scratch.

SETUP first of all initializes all LP system parameters, then examines the row types constructing a logical or slack column for each nonequality row and writes these to disc using calls to OUT of IO. An extra free row is incorporated for the phase 1 cost row and the logical columns for free rows are marked basic.

SETUP then reads the A matrix columns from the binary INPUT file and writes then out to disc using calls to OUT of IO. For each column the NAME vector is set to record the column type (free/null), the column GUB packet number or zero and the column bound index or zero. The right hand side vector is recorded in core in RHS.

Finally, SETUP rewrites IBASIS and the RHS vector to place the GUB row elements at the end. The count of GUB rows is recorded in L and the actual row count is reduced by L. The cost row marker ICOST is reset to its new position in the rearranged rows.

IO

This subroutine handles all disc to core transactions and keeps track of column bookkeeping.

OUT writes two files of columns of the A matrix writing one column in each file per call. The first file IA1 contains columns less their GUB elements. The second file IA2 contains columns less their GUB elements and any zero elements and is written in a packed format.

IN reads file IA1 cyclically up to NT times, in search of a particular column rewinding when appropriate. It is normally accessed for sequential columns by CHECK but INVERT uses it to locate basis, at-bound and key columns marked in the NAME vector.

INPCKD reads file IA2 cyclically up to NT times in search of a column rewinding when appropriate. It is only accessed in random forward increments searching for key columns and thus uses a packed file.

After NT reads, sufficient to locate any column, both entries cause an error message and dump.

Once IN or INPCKD have located the required column and read it to a slot in AJ( ), the column index is loaded to the corresponding position in JA, its reject memory in JAREJ is cleared and its mnemonic (unused) is placed in JAK.

Thus it is not possible to read a column into core without adjusting the bookkeeping of what is in core.

MAPIN

This subroutine is the system verb which sets the bookkeeping of the column status and allows a restart from a previous status. It is designed to read a file IMAP generated by MAPOUT and loaded by INMAP to file IMAP.

MAPIN reads settings of NULL, BASIC, KEY and ATBND designated at random one type per card up to 4 columns per card for each type. Each type sets the column status marker in NAME appropriately.

Restarts

MAPOUT writes the LP system status onto the end of the INPUT tape file when MAPOUT is called, and provides an INVERSE card for MAPIN use. The INVERSE card causes MAPIN to check for an inverse plus bookkeeping data and the solution status on the INPUT tape, and read it if present.

INMAP

Is the entry designed to read the input card stream for MAPIN cards and load them onto file IMAP. It is terminated either by an end of file or and END card.

Manual preparation of MAP cards is possible and extensive checks in MAPIN will detect and avoid most errors.

INVERT

This is the system verb which inverts or reinverts the current basis as defined in NAME records and completes the basis with artificials.

When INVERT is called, an inversion occurs only if the current iteration exceeds ITNINV. When it does ITNINV is increased by INVF, and an "INVERT" message is printed.

INVERT first clears the basis records and the GUB packet basis column count, sets up a unit basis and for each GUB row without a key chooses the first valid GUB packet column as key. It then cycles the column status records in NAME until it locates a basic, key or at-bound column, which is retrieved by IN. Key and at-bound columns are accumalated in GAMMA scaled by their packet righthand sides (if keys) or their bounds. If basic columns are in a GUB packet, the key is located by INPCKD, subtracted from the column and the result transformed and pivoted into the basis in a row determined by PIVOT.

When all NAME records have been checked and the columns incorporated or rejected by PIVOT, the basis record is completed with logicals or if necessary with artificials. The artificials are then constructed in DELTA transformed and pivoted into the basis. Finally, FEASCH is called to construct and check the solution feasibility.

NB. The MAPIN used can be partial, complete, redundant or nonsense.

FEASCH

FEASCH is called by INVERT to compute $\beta = B^{-1}\gamma$ given γ in GAMMA and B^{-1} in B. The resulting β elements in BETA are checked for feasibility and the basis is adjusted if infeasible until the resulting BETA is feasible and the phase IPHASE is 1 or 2.

The method is to cycle each element of BETA from 1 to M, compute it, check if it exceeds a bound then check if it is positive. If it exceeds a bound, the basic column is set "at-bound," and the bound is subtracted from that BETA(I) which then becomes negative and infeasible. If it is negative i.e., infeasible, its sign is reversed and the column is replaced by its negative artifical*, to pick up the infeasibility directly, (the artificial need not be transformed) and pivoted into the basis in place of the old basic column. Finally, if GUB rows are present the last L entries in BETA are filled with the values of the key variables.

Feasibility of the keys is maintained by calling KEYCH to move the infeasible key (essential packet) to a basic position in a non GUB row and processing it as above as an infeasible variable.

If any infeasibilities have been encountered, or the resulting Phase 1 cost is larger than CTOL, Phase 1 initiates otherwise Phase 2.

---

* The negative artificial of a column A_j is $-A_j + e_m$ is the mth column of the identity matrix. The negative artificial of an artificial $e_i + e_m$, is $-e_i + e_m$.

PRIMAL

This subroutine is the main LP verb which solves the LP problem phases 1 and 2.

PRIMAL notes its entry and time using MESSG, then picks up the cost row for its current phase 1 or 2, the appropriate π row in the inverse and sets the phase 1 row to free in phase 1 or equality in phase 2.

The basic solution cycle is counted by ITRN. If ITRN exceeds K5 or if CP time exceeds TMAX a MAPOUT is called by STATUS followed by EXIT.

The solution cycle proceeds with COLUMN to find an in-core column JCOL. If JCOL = 0 no column is found and the phase terminates. If the cost is zero in phase 1 this is the feasible solution termination, if phase 2 this is the optimal solution, if non-zero in phase 1 there is no feasible solution.

Next ROW is called for a pivotal row IROW. If IROW = 0 no row is found and the problem is unbounded.

Next the pivotal element is checked for size and degeneracy. If it is too small NREJ is indexed. If 5 bad columns have occurred an INVERT is called to check the inverse. If more than 100 bad columns have occurred the problem terminates either in phase 2 as optimal, or with a dump. If the pivotal element is okay, the cost change THETA * DJ(JCOL) is checked. If this is smaller than CTOL, NDEG is indexed. If more than NDEGLM degenerate columns have occurred and there are no more good columns the column is accepted. Otherwise in either case the old column is rejected and a new column is selected by COLUMN ignoring the previous selections.

Next the step is saturated to the bound on the column. If it exceeds the bound and the column is not at bound, the column is set ATBND. If the column is ATBND, the column is set free. In either case there is no pivot and the solution is corrected for the bound change but there is no basis change correction and NREJ = 1 to suppress pricing in the next iteration.

If the step is within the bounds, a basis change will be made. The rejected column is located first in the basis of IROW $\leq$ M, then in the keys of IROW > M. If IROW $\leq$ M there is no key change, the new

column is pivoted in by PIVOT at IROW. If the new column is AT BND the step is off the bound and the new column value EPSI is corrected to the bound value less the step. Then the new column is made basic, the rejected column is made free, and the solution step made and the new basic column value set to EPSI.

If IROW > M there is to be a key change. If the GUB packet is essential, it has other basic columns and the key is changed for one of these using KEYCH, then IROW ≤ M and the previous case follows.

If the GUB packet is not essential it has no basic columns, so the key is changed to the new column and the old key is dropped. The new key value EPSI = THETA and a normal step is made as before without a pivot and pricing in the next iteration is suppressed.

After every pivot the rejected columns are cleared.

At the end of the iteration cycle STATUS reports the solution change.

After every row and column selection, or at any optimality stage, XCHECK is called for a debug which occurs if K4 is set > 0. See LP for details.

STATUS

STATUS prints out the status of PRIMAL iterations every cycle under the headings.

PHASE = (IPHASE) - the LP phase 1 or 2.

ITER = (ITRN) - the LP iterations count.

TRY = (NTRY) - the number of iterations with the same set of columns in core + 100 x maximum number of tries.

VAL OBJECTIVE = (BETA(IC)) - the solution value of the current cost row.

NDJS = (NDJS) - current count of negative DJ's an estimate of non-optimality of the current core columns.

NARTS - the current number of artificial vectors present.

VALUE DJ IN = (DJ(JCOL)) - the value of the DJ for the column chosen to enter.

COL IN = (JPØS) - the internal number of the column chosen to enter.

CODE = (NAME(JPØS)) - the status of this column.

COL OUT = (JOUT) - the column rejected.

CODE = (NAME(JOUT)) - the status of the column.

NSCAN - the current number of rewinds of file IA1 the A matrix plus the number of columns active in core, or columns read on disc.

Note: If JOUT is zero, no column was rejected and its code is zero.
If JCOL is zero or IROW is zero, these are taken as termination markers and the NOTE obtained in the STATUS call is printed e.g. PRIMAL--END, etc...
If JOUT > NT artificial code is constructed equal to the 10^9 x IROW.

ROW

This subroutine is called by PRIMAL to locate the pivot row IROW in the selected column JCOL.

ROW first transforms the in-core column JCOL to the current basis representation in ALPHA, reconstructing the complete column including GUB elements which occupy the last L positions.

The row selection depends upon whether the column is at-bound or not, for if at bound the column represents the slack vector and the step is negative. For either case the minimum THETA is found which

(i) drives the resulting solution to zero or

(ii) drives the rejected column out at bound, depending upon the sign of the potential pivot element ALPHA(I).

These are case 2 and 3 for a normal column and cases 3 and 2 for an at bound column. Upon exit THETA is the step in row IROW, core-column JCOL, (JPØS on disc) and ITYPE is 2 or 3 for the type of step.

If no row is found IROW = 0, ITYPE = 1 indicating an unbounded step and THETA = 1·E35.

COLUMN

This subroutine locates a potential column entry JCOL from those in-core, or calls CHECK to search all or part of the disc for more columns and uses these.

COLUMN counts NTRY selections with the current columns. If more than NCRMAX, or no columns exist in core it locates up to NCRMAX new columns with a call to DISC. If no columns are found the problem is optimal and JCOL = 0 at exit.

The in-core columns are then priced out, unless no pivot has occured (NREJ or NDEG $\neq$ 0) because of column rejection or DISC has just been called. PIKEY is always set to the current key price for the packet recorded in JPKTO. If a column is in a packet, its price is adjusted for the key price. All columns are priced apart from rejected columns.

The best unrejected column is now found by searching the DJ values. At bound columns have DJ reversed as they correspond to the slack column, and the number of negative DJ's is counted in NDJS.

If no good column is found, i.e. the best DJ is above the DJTOL threshold, DISC is called to search for more columns unless these columns are new, denoted by NTRY = 0 (no selections with these columns).

Upon exit JCOL is the in-core location of the best column found in-core (or from disc) called JPOS, or JCOL = 0 denoting no column. If JCOL = 0, JNCORE is reset to the number of columns in core (because DISC has deleted the count of columns that were there) in order to try to save a disc read in the next phase if any.

DISC

This subroutine checks the disc for more columns and selects those which are currently "not bad."

First DISC calls INVERT to see if the iteration count ITRN has exceed the next invert point and inverts if necessary.

DISC reads the columns in batches of NBCH columns serving 1 column/ batch. If fewer than NCRMAX columns are actually used these are read directly into core where they stay, once and for all. Alternatively the current file IA1 position JNT is found by INPOS and DISC examines the columns starting at JNT + 1, proceeding cyclically, changing batch every NBCH columns. If the new packet number PKT is different and nonzero the new key is located and read over any unused old key, or into the next vacant AJ slot, by INPCKD.

The column type is found in JTYPE and null (0), basic (2) and key (4) columns are skipped. Free (1) and at-bound (3) columns are read by IN to the next location JORG. The new column is priced out correcting for its packet if $\neq 0$, and if the new price DJNEW is worse ($\geq$) than DJOLD (the best of the current batch) the column is skipped. Otherwise this column is preserved as IORG in the batch records and the best batch column DJ as DJOLD.

Every NBCH column, column IORG is saved if it is better than DJTOL and IORG is reset to the next vacant column.

DISC will work if the packets are disjoint, (separated by zero packet columns), and also if the packets are mixed up, (alternate columns in different packets) but with much loss of efficiency due to multiple key searches and rewinds of file IA2.

DISC always pulls in the key of each packet first for each packet, using the packed file IA2 regardless of where the key is located in the packet.

Subroutine KEYCH

Changes the key for an essential GUB packet, to one of its basic columns in the packet, selecting the first one. The basis inverse, B, solution in BETA and current column in ALPHA are corrected for this rearrangement.

Subroutine SETBND, SETBNB, SETNNN, SETKEY

Sets and unsets the state of a column J in NAME (J), to either free (1), null (0), basic (2), at-bound (3) or key (4), respectively.

Function DOT, DOTS

Computes the inner product x'y in either double and single precision, respectively.

Subroutine MAPOUT

Writes the states of the null, basic, key and at-bound columns onto BCD cards, placed on file IMAP, and also places the current inverse B solution BETA and basis bookkeeping IBASIS and KEY onto the end of input tape INPUT to allow instant RESTART.

Function BOUND

Returns the value of a column bound, if bounded, or 10^{70} if unbounded, or artificial.

PIVOT

This subroutine pivots a new column ALPHA into the basis inverse B at row IROW. If IROW is zero the best pivotal row is found.

IROW is zero the basis is checked for empty slots or slots containing the column disc index JPOS. If the latter is found, this row is used as IROW since this is SETUP's method of fixing logicals for free rows. For null basis entries PIV and IROW track the largest ALPHA element and its row, and this is used as the pivot element unless it is less than PIVTOL where upon the column is dropped with IROW = 0 as a marker.

If IROW is non-zero, the pivot ALPHA (IROW) is checked against the PIVTOL for possible errors. If the pivot is not unity, the inverse row IROW is normalized by the pivot. Then for every non-zero ALPHA entry at I, that multiple of the inverse pivot row is subtracted from the Ith inverse row (skipping the pivot row).

KEYFND - function

KEYFND find the location in core of the key column for the specified packet. If none is found in core it returns a value zero.

If the calling argument is zero KEYFND locates any key in core which has no associated GUB packet columns. If no key is found in-core it returns a value zero.

Otherwise the value of KEYFND is the column location 1 to NCRMAX.

ESCAPE

ESCAPE causes termination with a snapshot of the working core followed by a call to file 0. This will generate an abort condition suitable to generate a system dump. If it is desired to do this, use:

```
DEBUG.
LGO.
EXIT.
DMP (LP, ESCAPE)
7
8
9
```

This will dump the core using the labelled system dump from subroutines LP to ESCAPE, which should be first and last respectively.

Consult the variable list for a definition of the global variables.

All calls to ESCAPE are preceded by an ERRØR message of explanation of the fault condition.

XCHECK

XCHECK delivers a core snapshot if ITRN lies between N_1 and N_2 where $K4 = 1000\ N_1 + N_2$. (K4 = 0 suppresses XCHECK.)

XCHECK prints using the following format.

(a)	Col 1	indexes the normal and GUB rows respectively.
(b)	Col 2	prints the basis IBASIS and KEYS respectively.
(c)	Col 3	is the current column representation ALPHA of JCOL.
(d)		gives the pivot position IROW.
(e)	Col 4	gives the current basic and key variables respectively.
(f)		step is THETA the proposed step, before bounding.
(g)		the column bound.
(h)		the selected column disc index.
(i)		is the list of core-column disc indices.
(j)	Col 5-14	is a list of 10 columns around the selected column in their current basis representation.
(k)		is a list of the column name codes at the XCHECK instant.

REPORT GENERATOR ROUTINE DESCRIPTIONS

REPGEN - the main program acts principally as a control program calling other routines to perform specific functions; determines if all solutions have been interpretted and initializes storage for each solution.

SETUP - reads input deck and reference list file into core storage.

INSOLN - interprets the meaning of each column in the solution and stores its value in the appropriate array(s).

YRCOST (J) - same as in matrix generator.

VALUES (N, ISTART, IEND, VAL) - determines cost information associated with each "X" or "W" type column in the solution; N is the number of the vehicle type, ISTART is its first year of existance, IEND is its last year of existance, and VAL is the number of those vehicles.

CINFO - this routine organizes, tabulates and outputs the table of cost information.

PINFO - this routine merely formats and outputs the last three tables of information; purchased resources, stored resources, and total resources used.

APPENDIX C

FLOWCHARTS

GENLCP..... C-2

BBCAV2..... C-12

REPGEN..... C-82

PROGRAM GENLCP

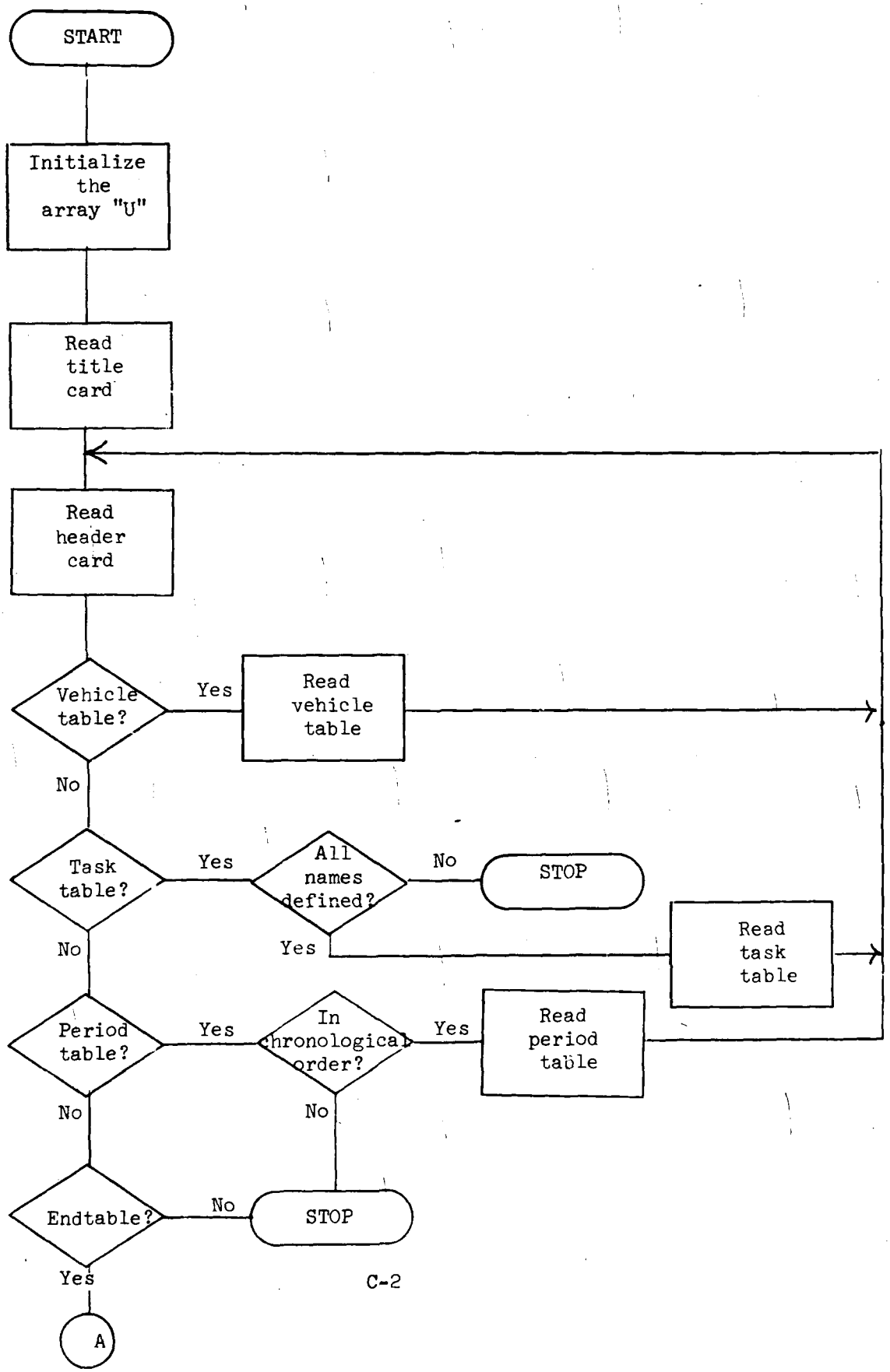

PROGRAM GENLCP (con't)

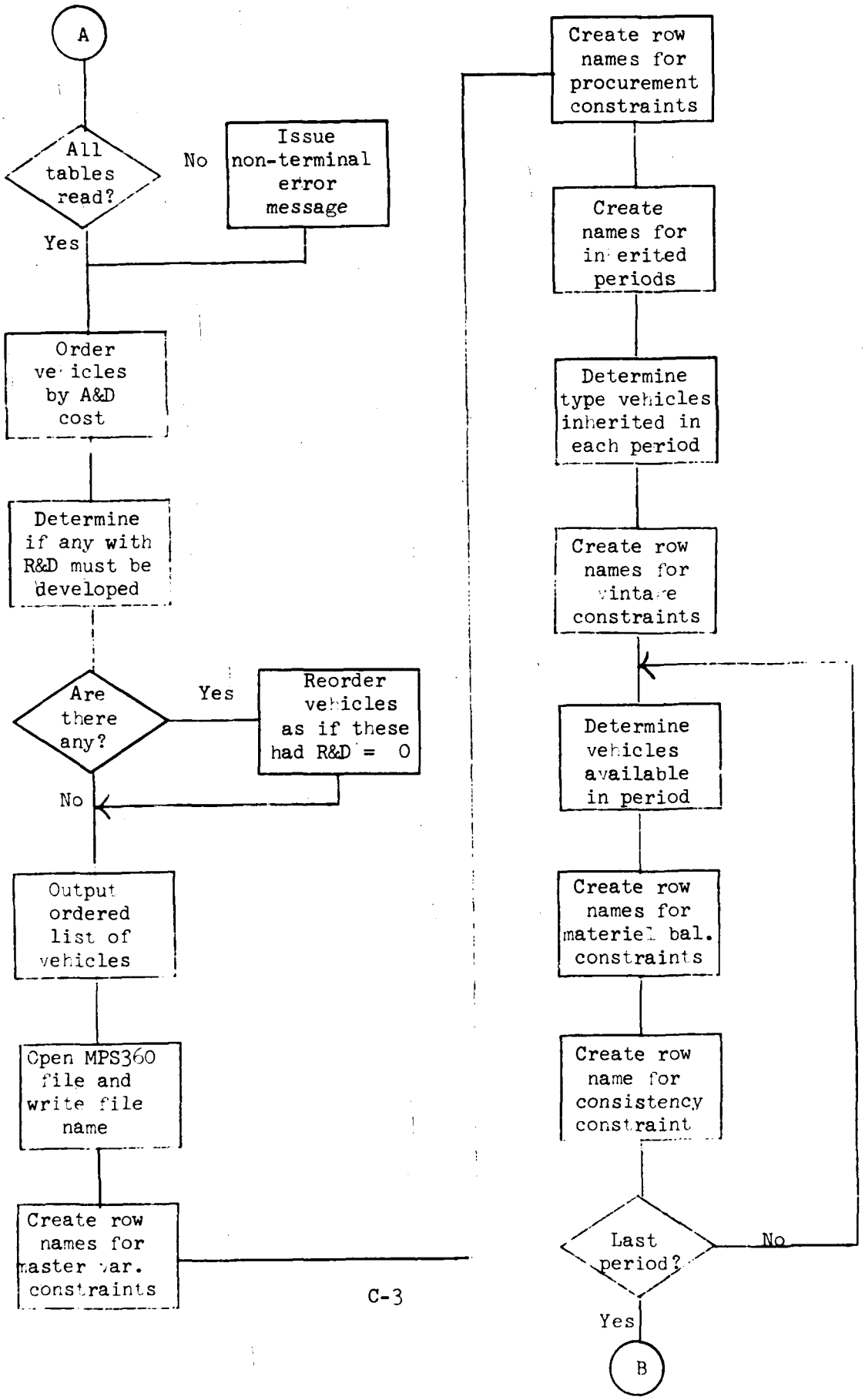

PROGRAM GENLCP (con't)

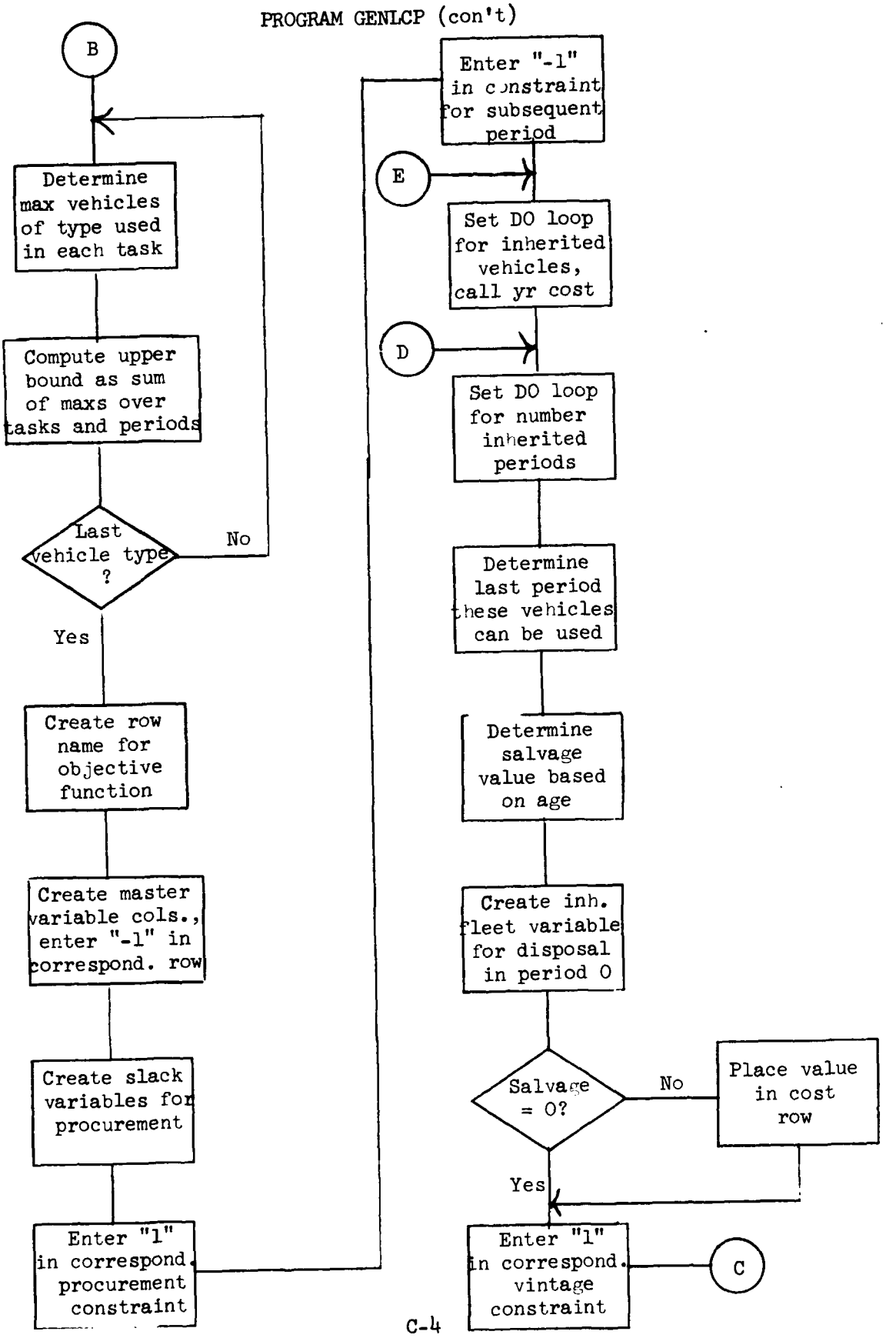

PROGRAM GENLCP (con't)

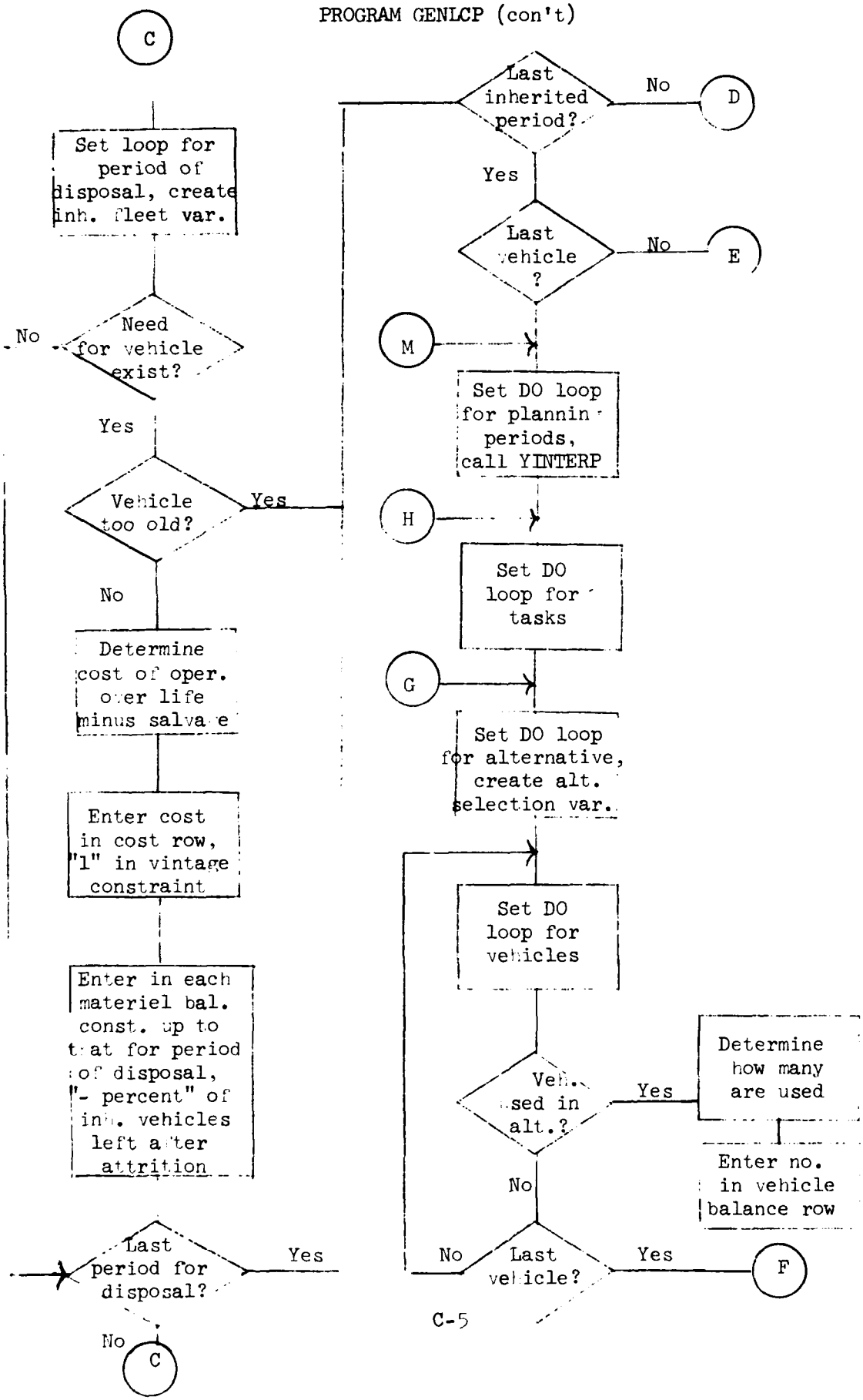

PROGRAM GENLCP (con't)

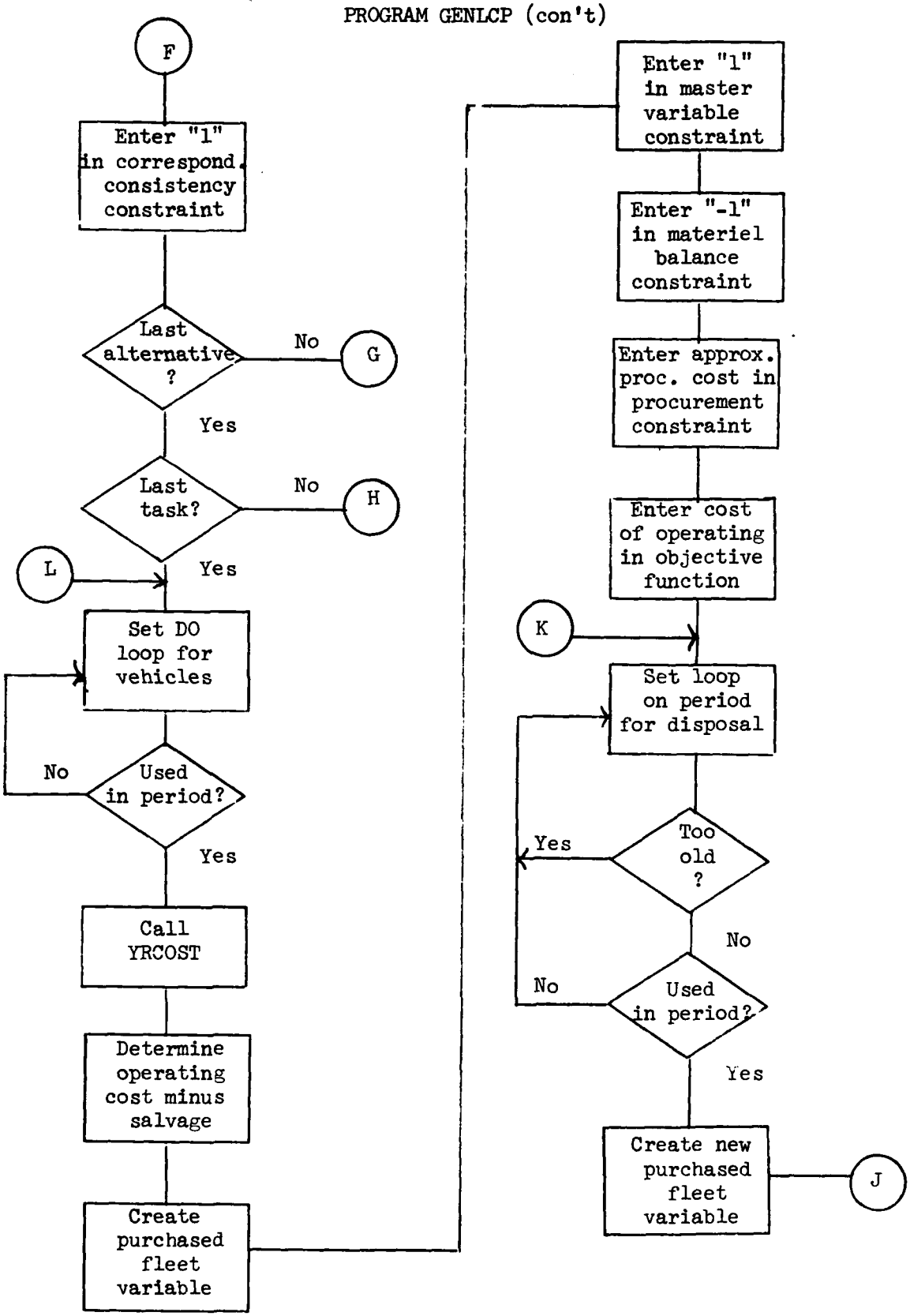

PROGRAM GENLCP (con't)

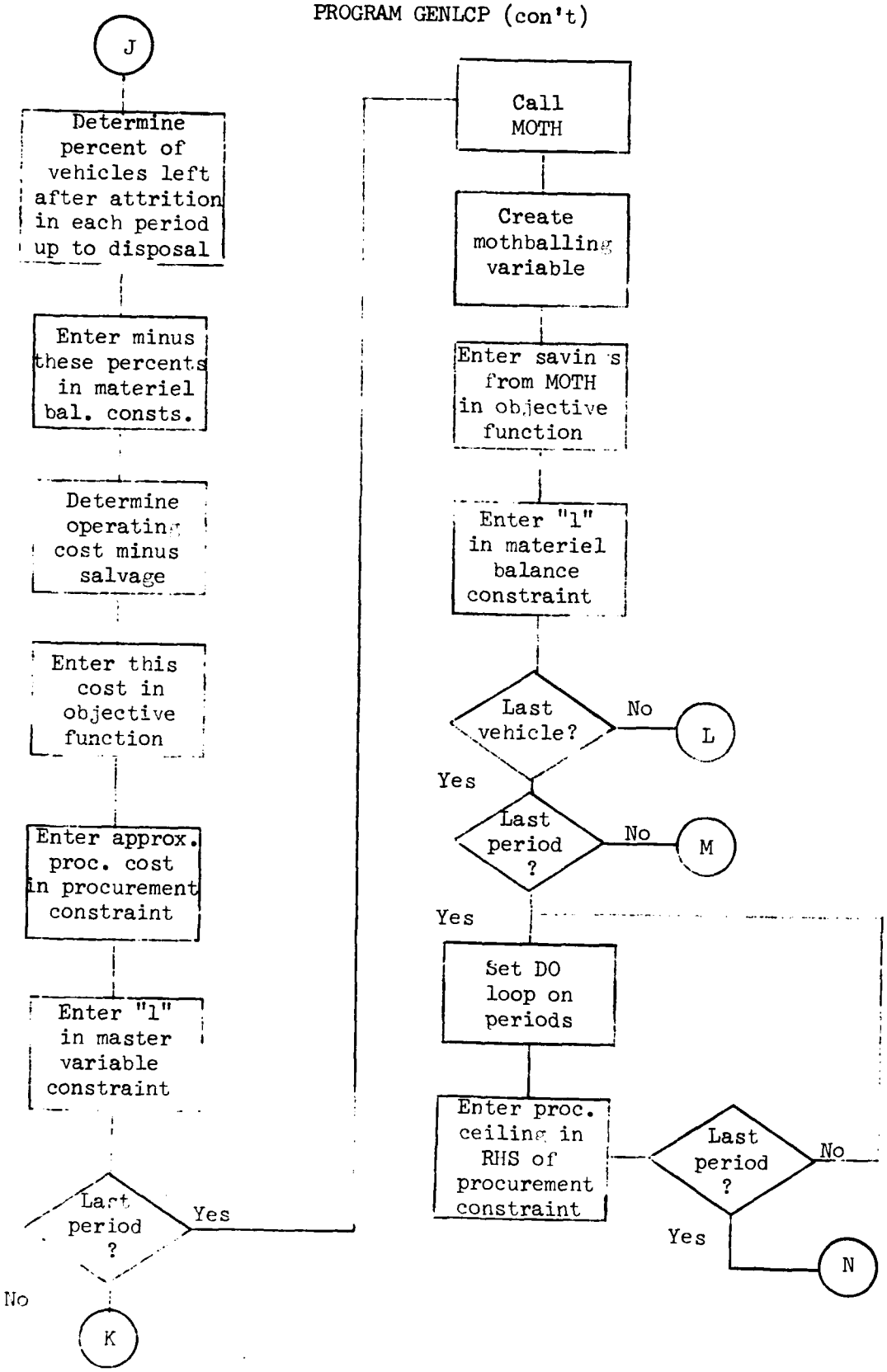

PROGRAM GENLCP

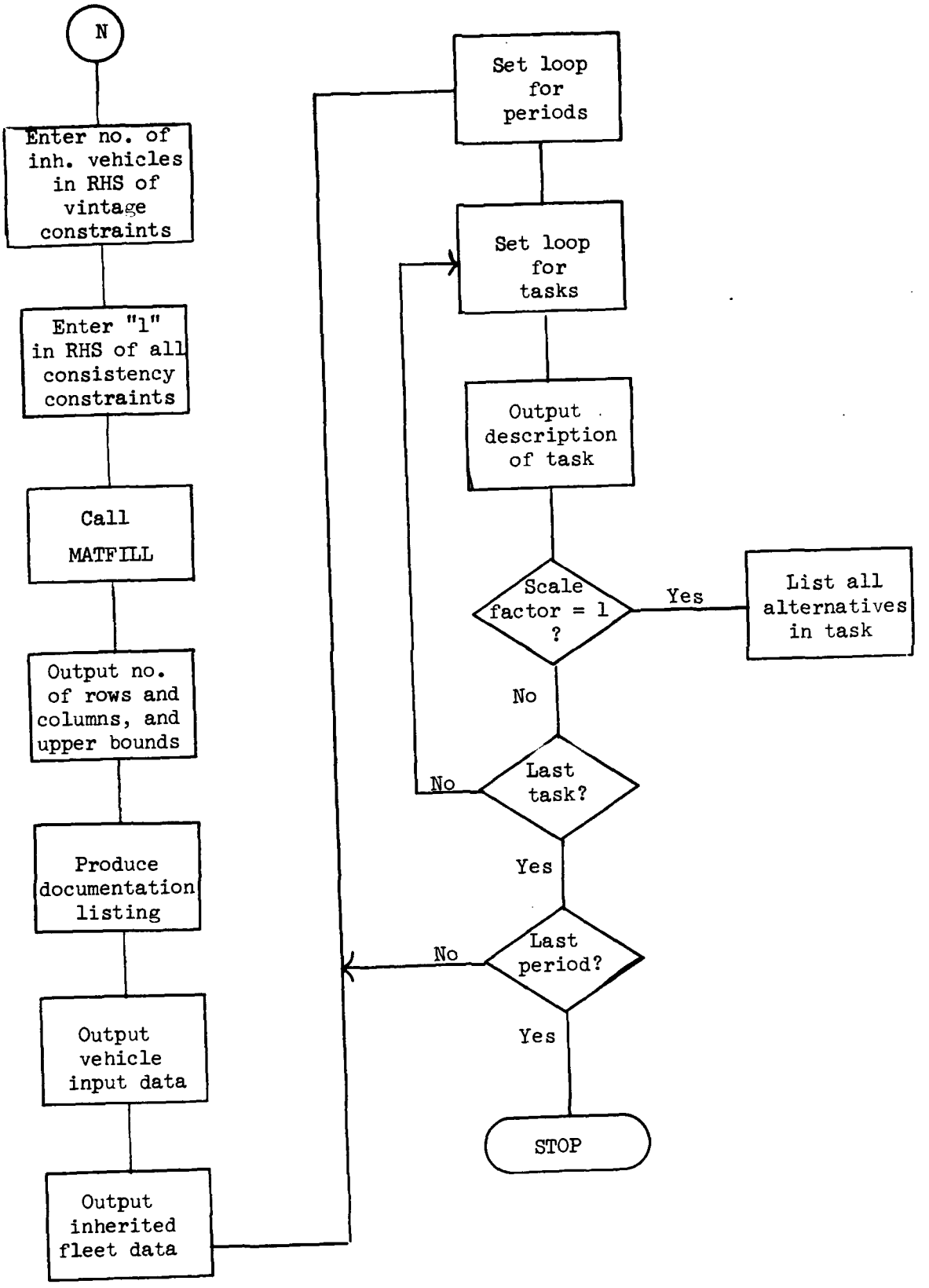

SUBROUTINE YRCOST

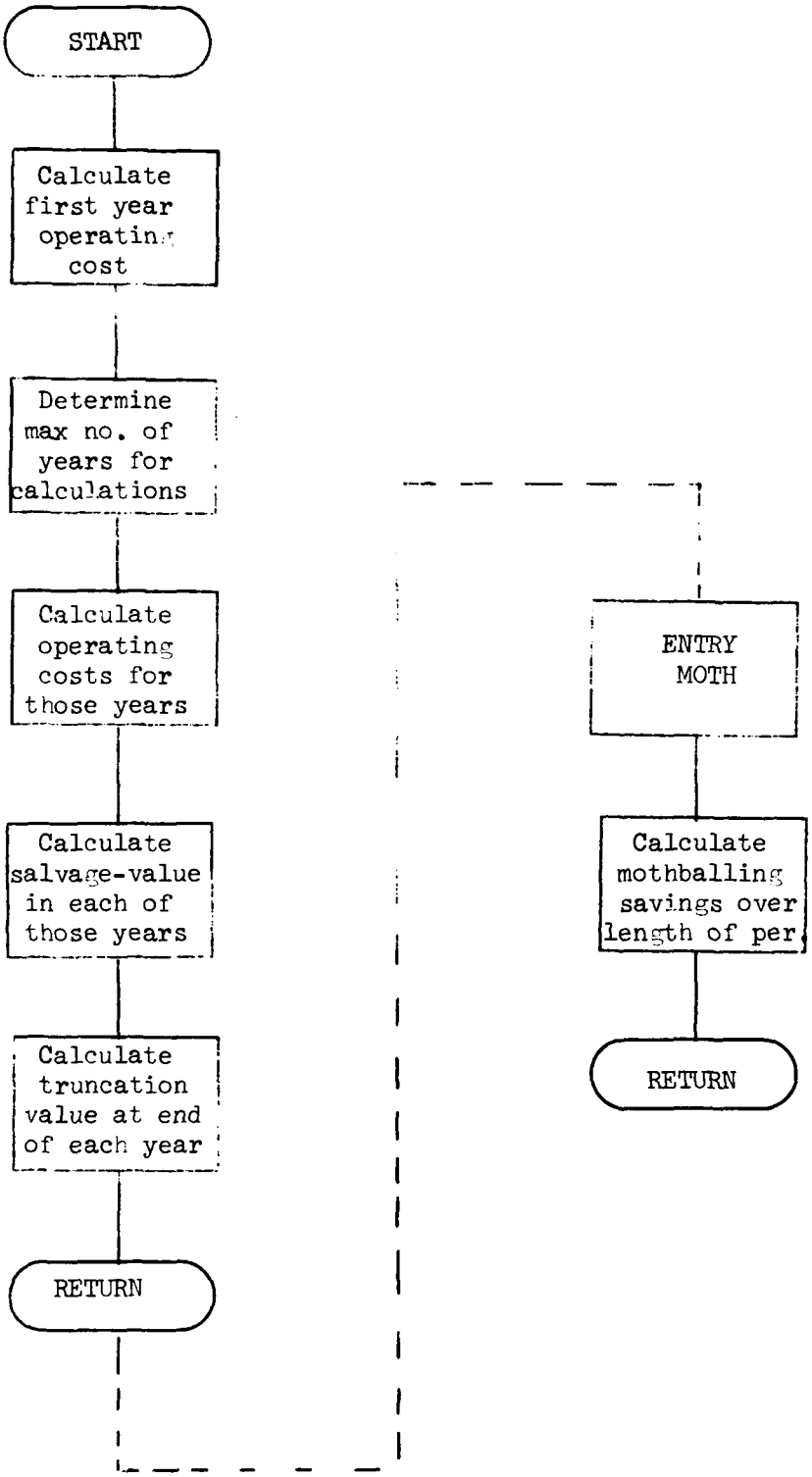

SUBROUTINE YINTERP

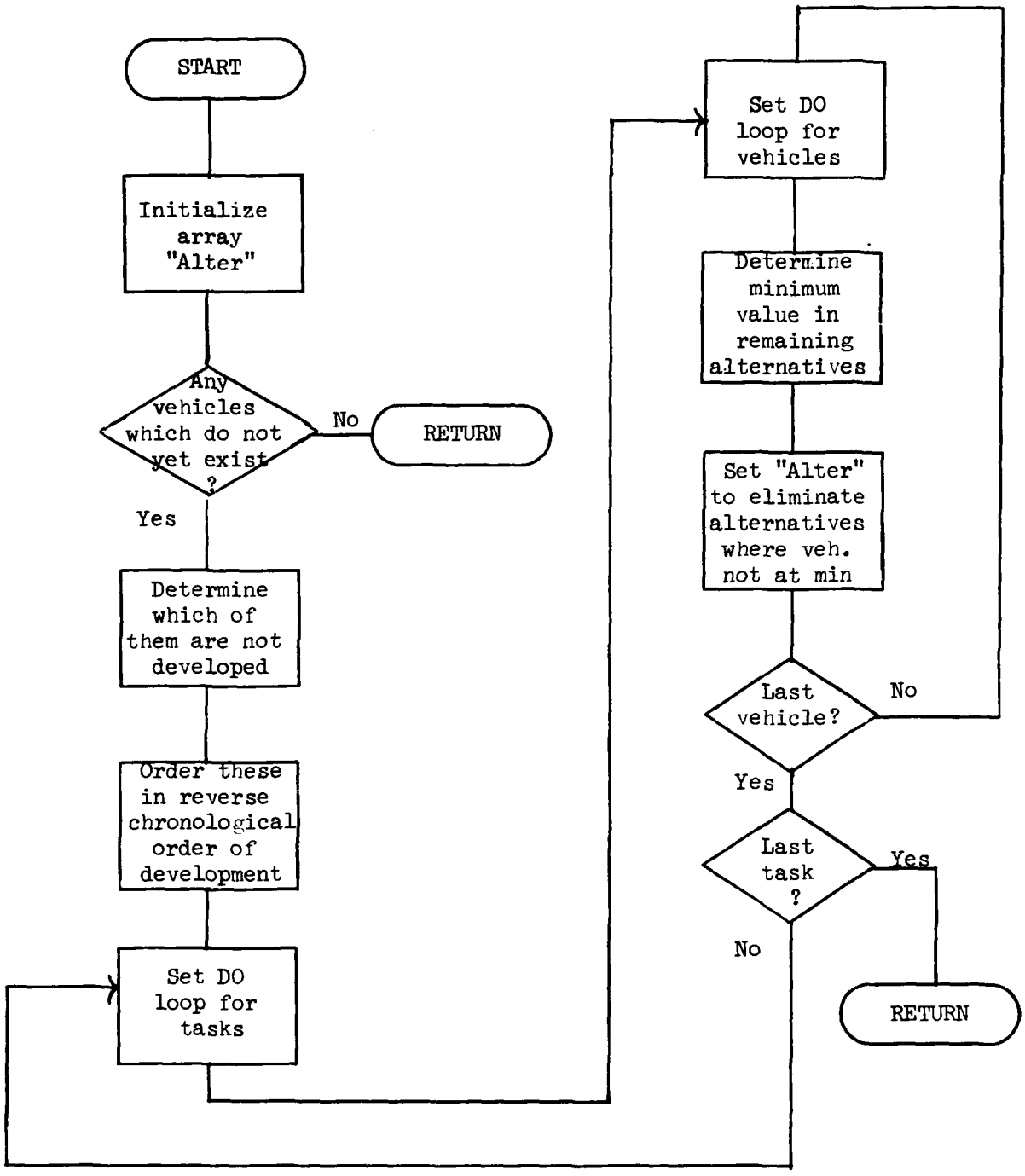

SUBROUTINE MATFILL

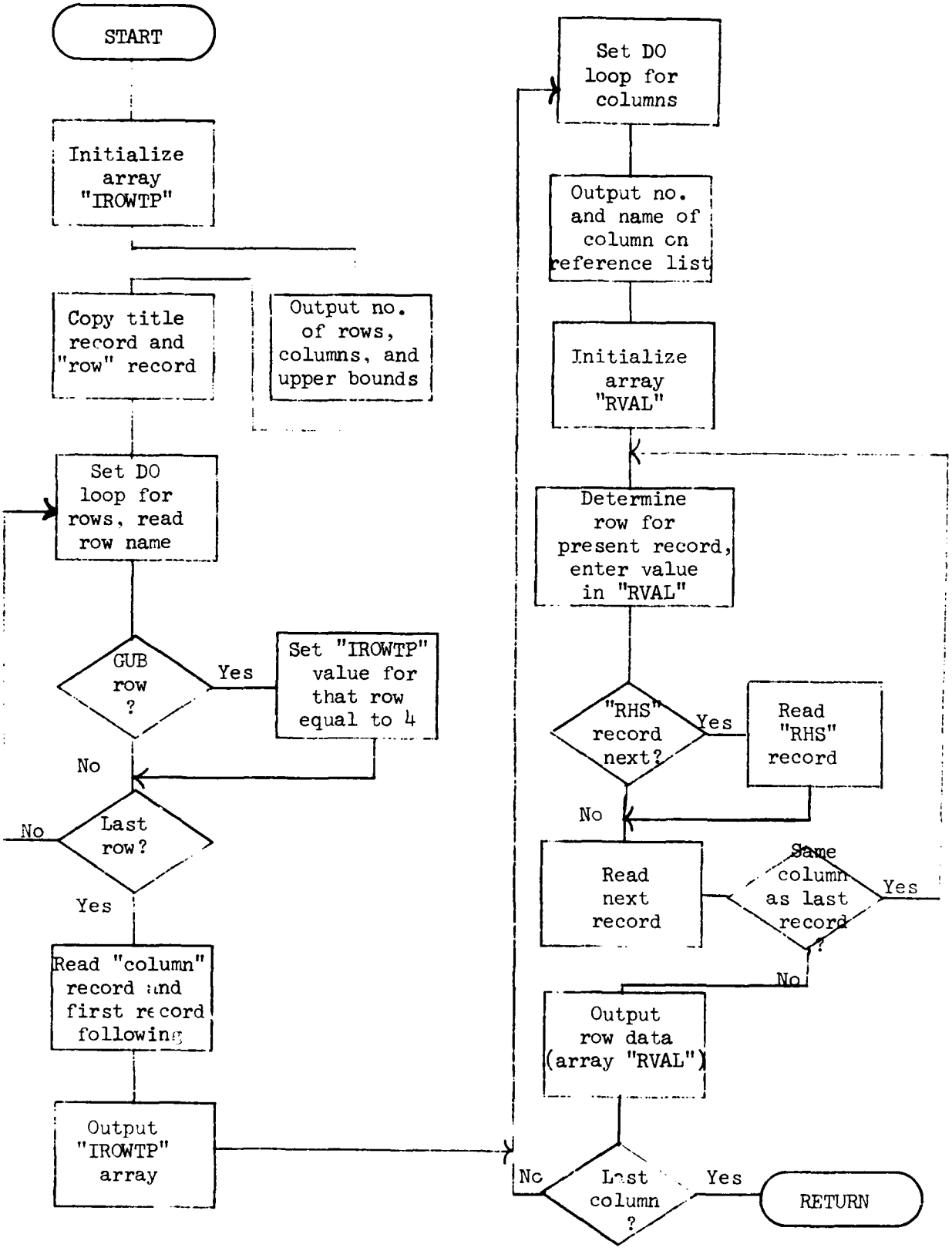

PROGRAM BBCAV2

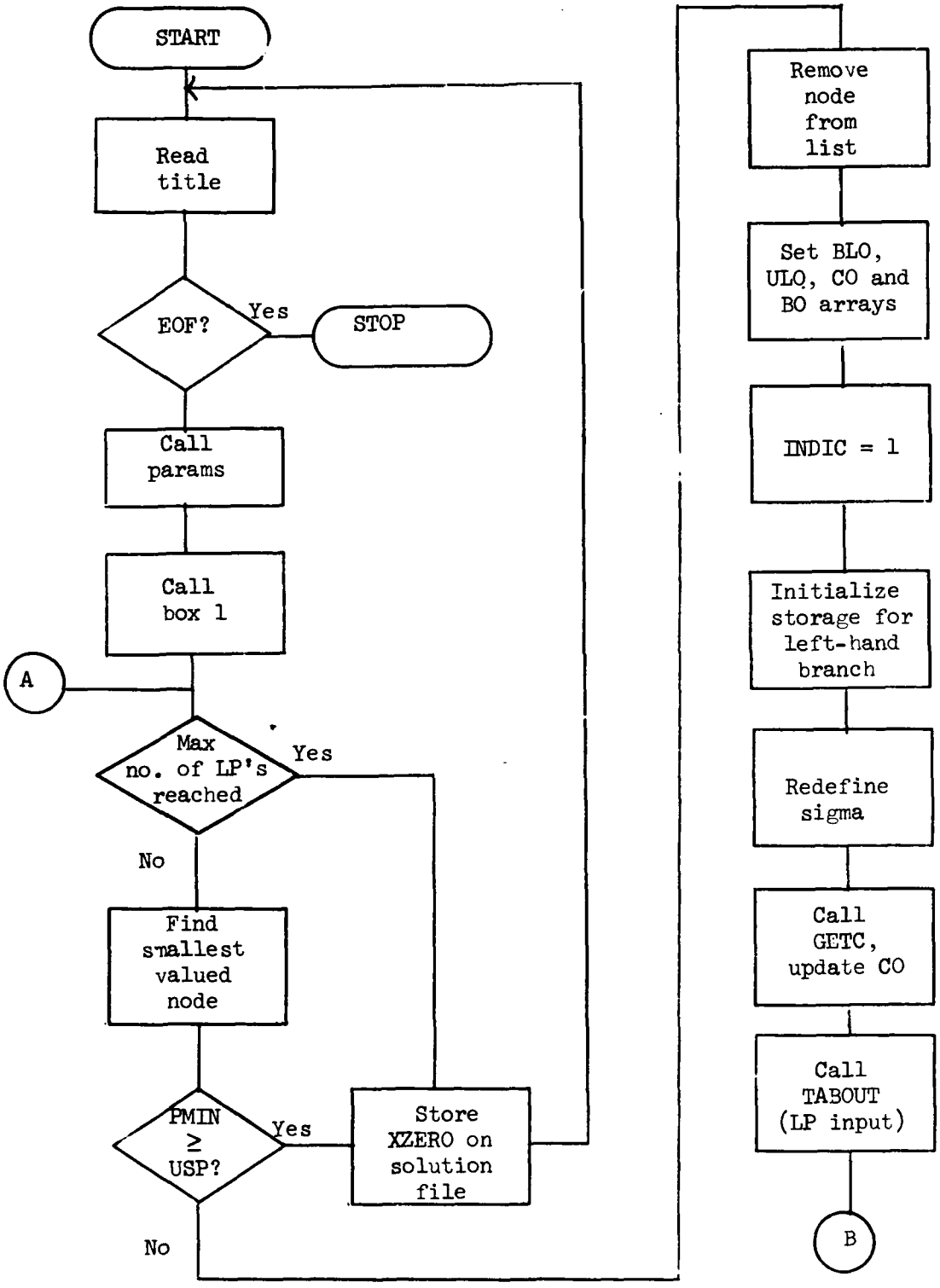

PROGRAM BBCAV2 (con't)

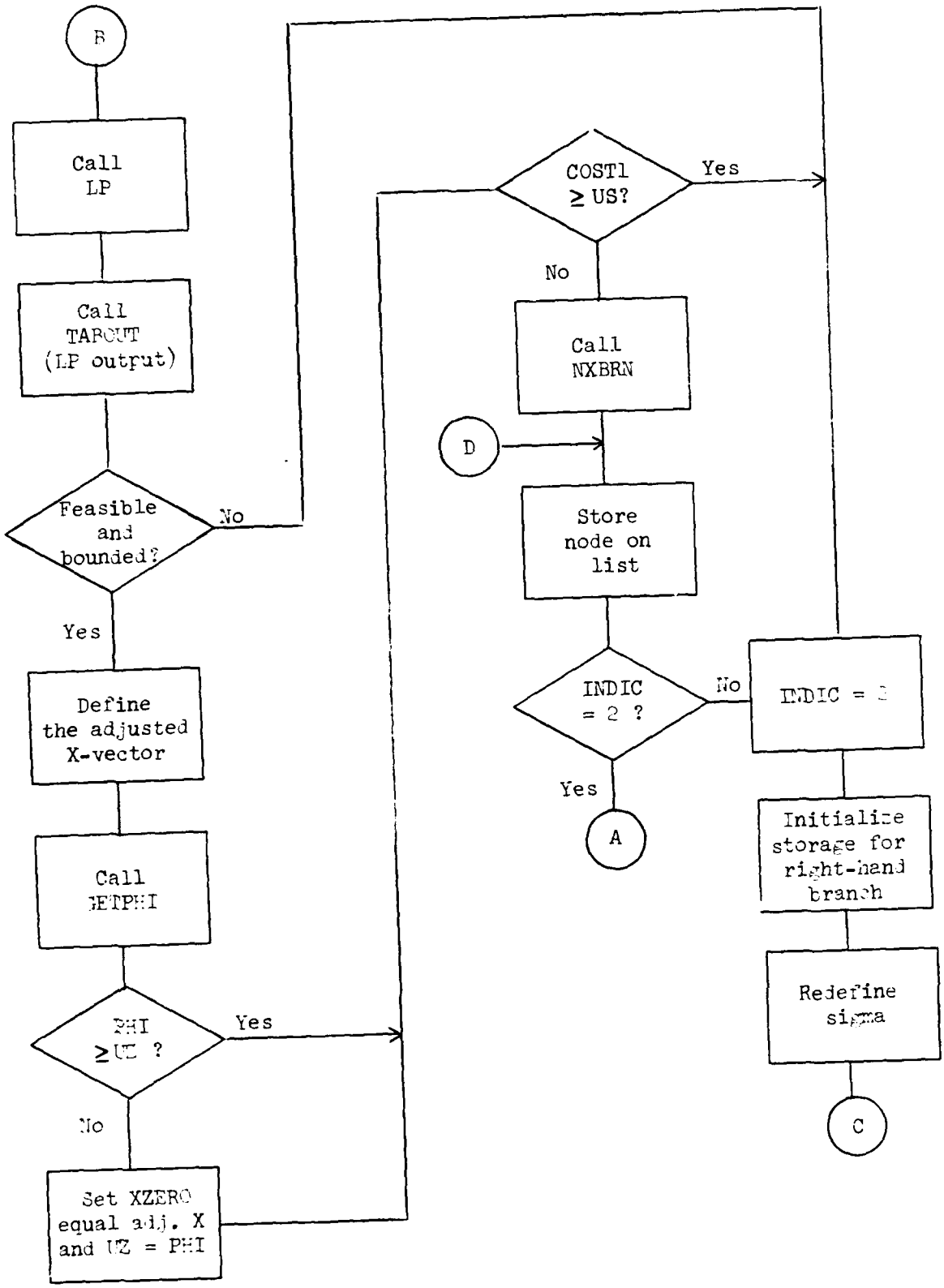

PROGRAM BBCAV2 (con't)

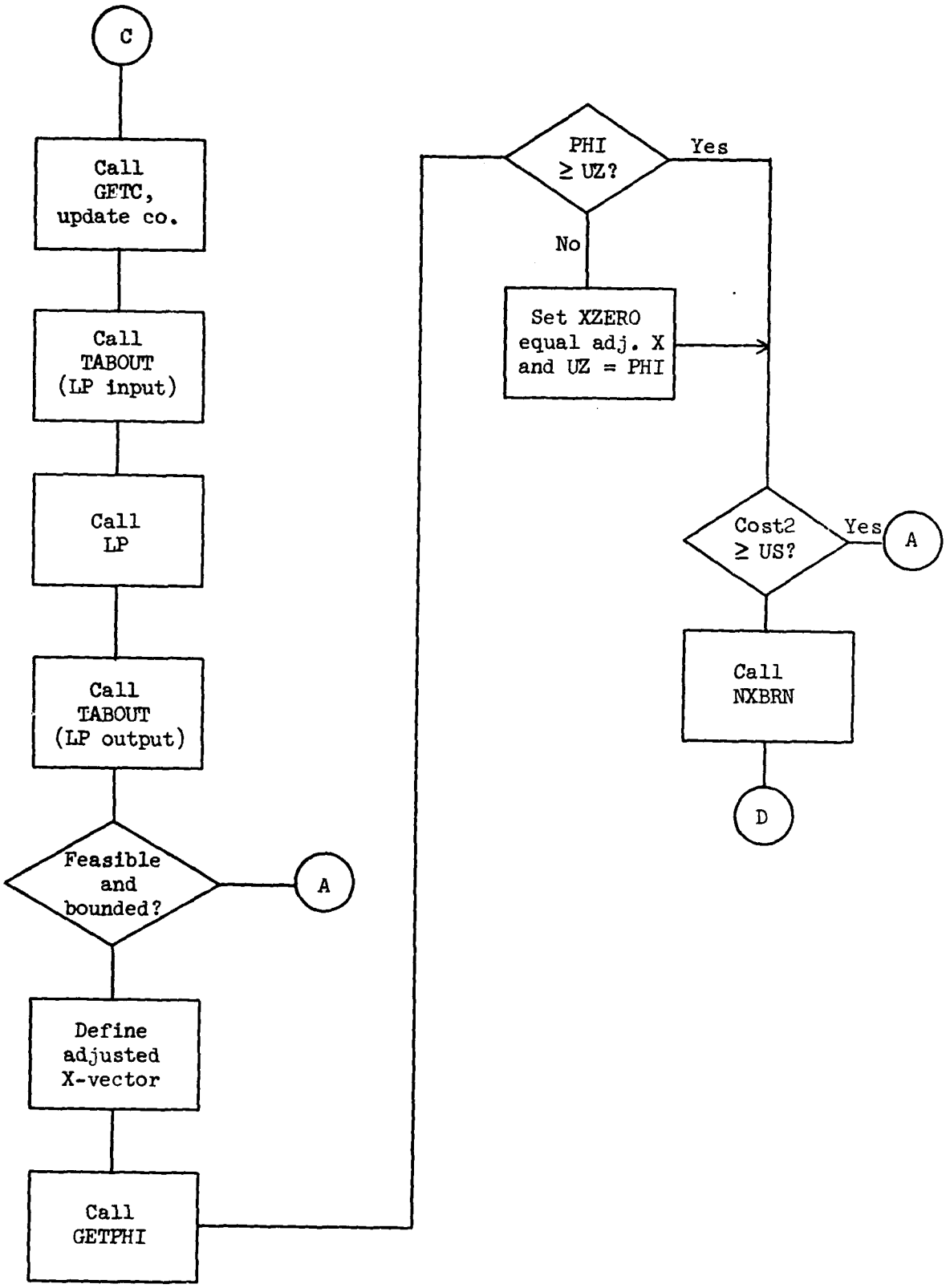

SUBROUTINE BOX1

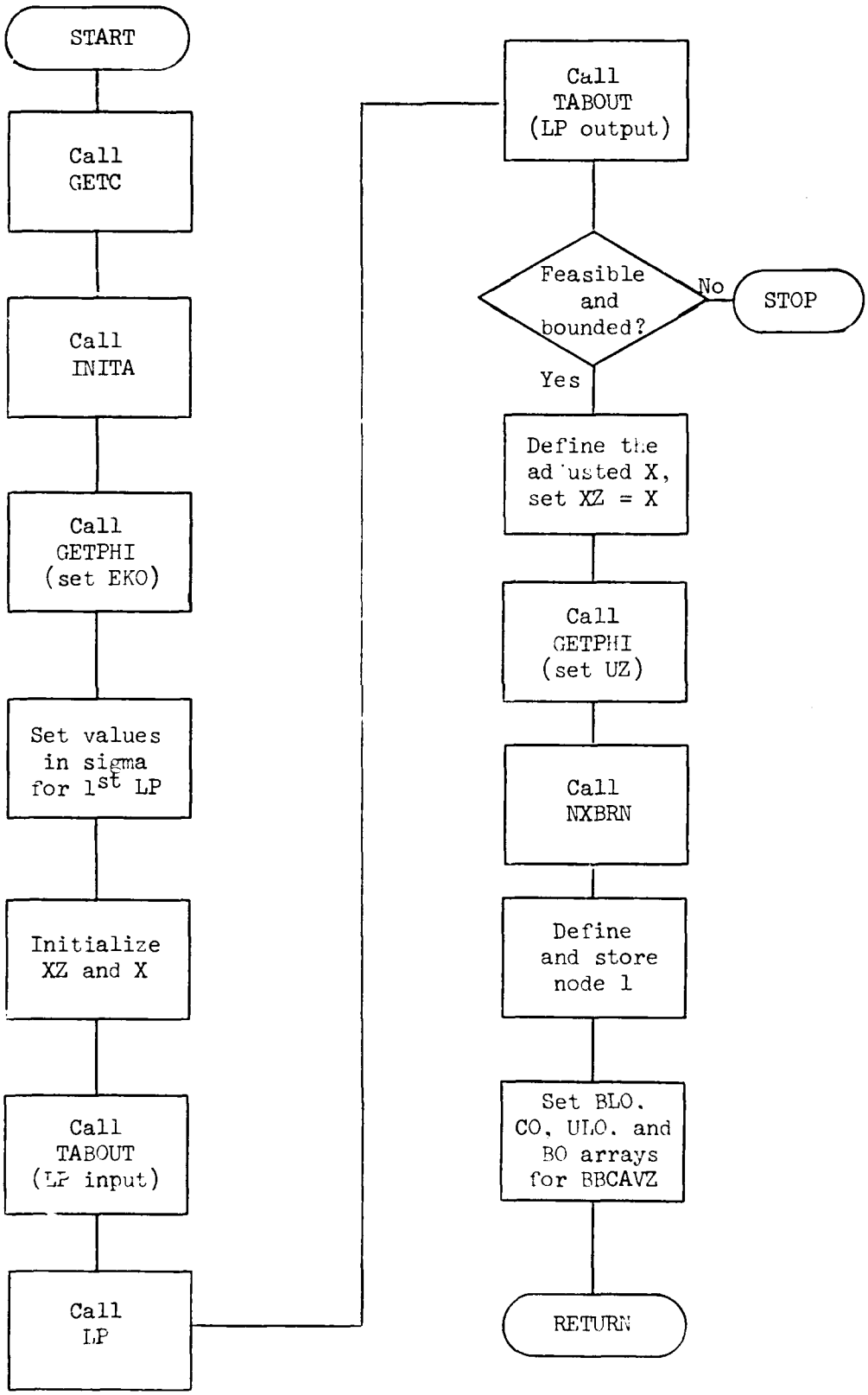

SUBROUTINE GETPHI

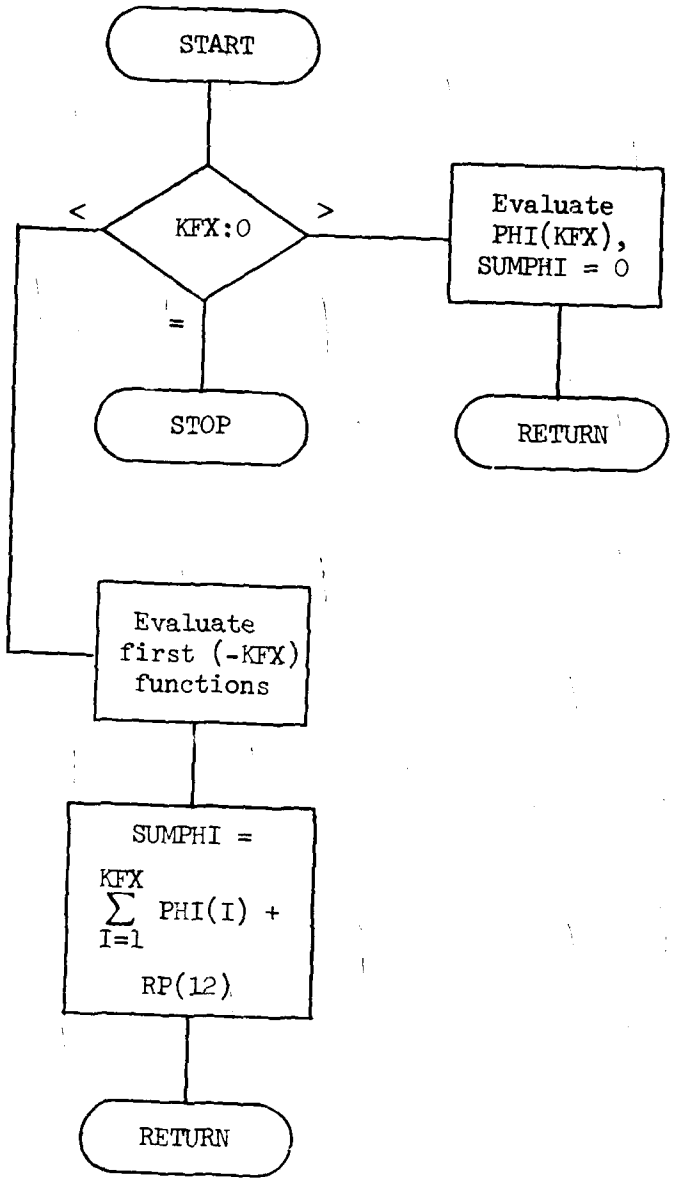

SUBROUTINE TABOUT

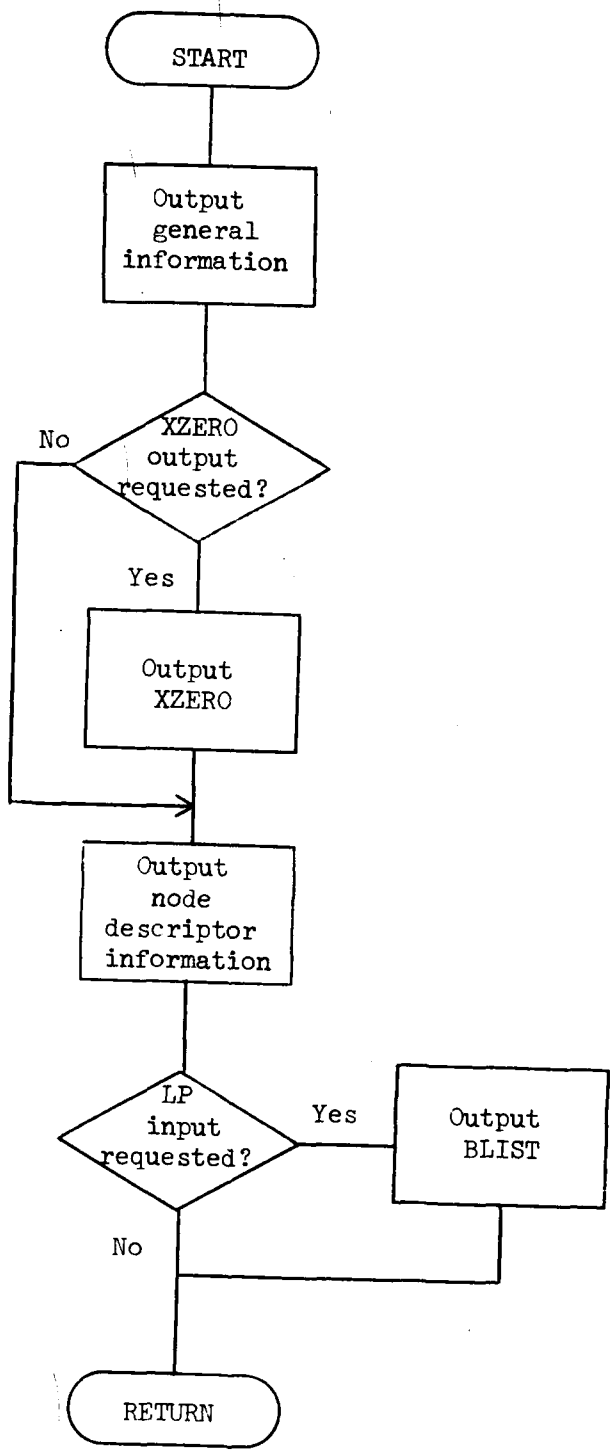

SUBROUTINE READIN

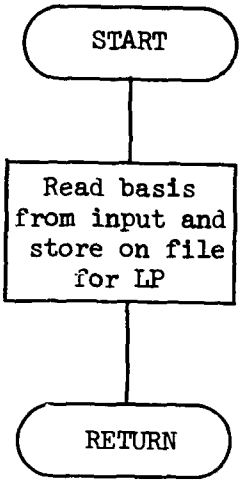

SUBROUTINE SET

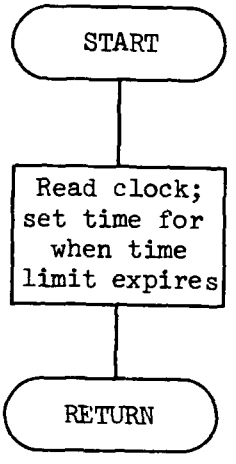

SUBROUTINE TIMEC

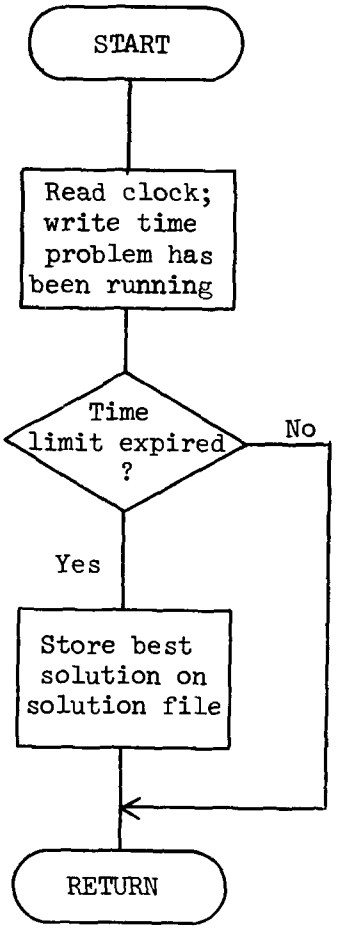

SUBROUTINE NXBRN

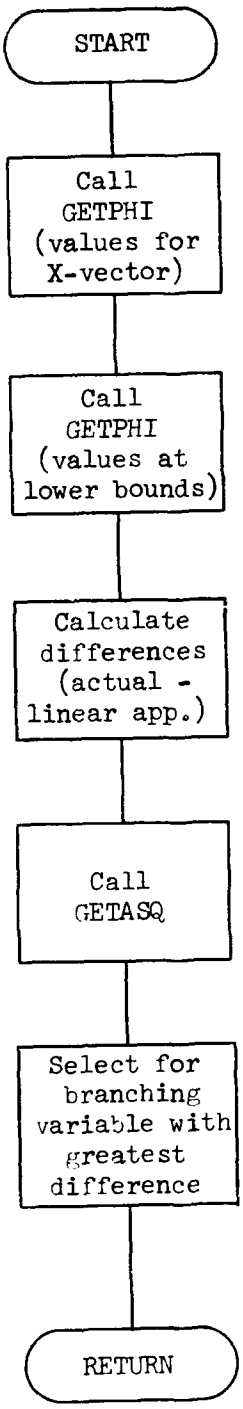

SUBROUTINE GETASQ

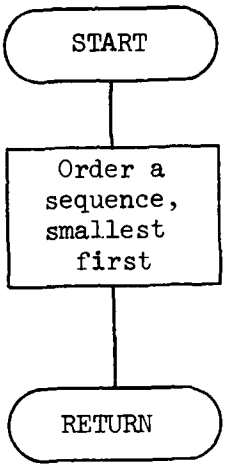

SUBROUTINE GETC

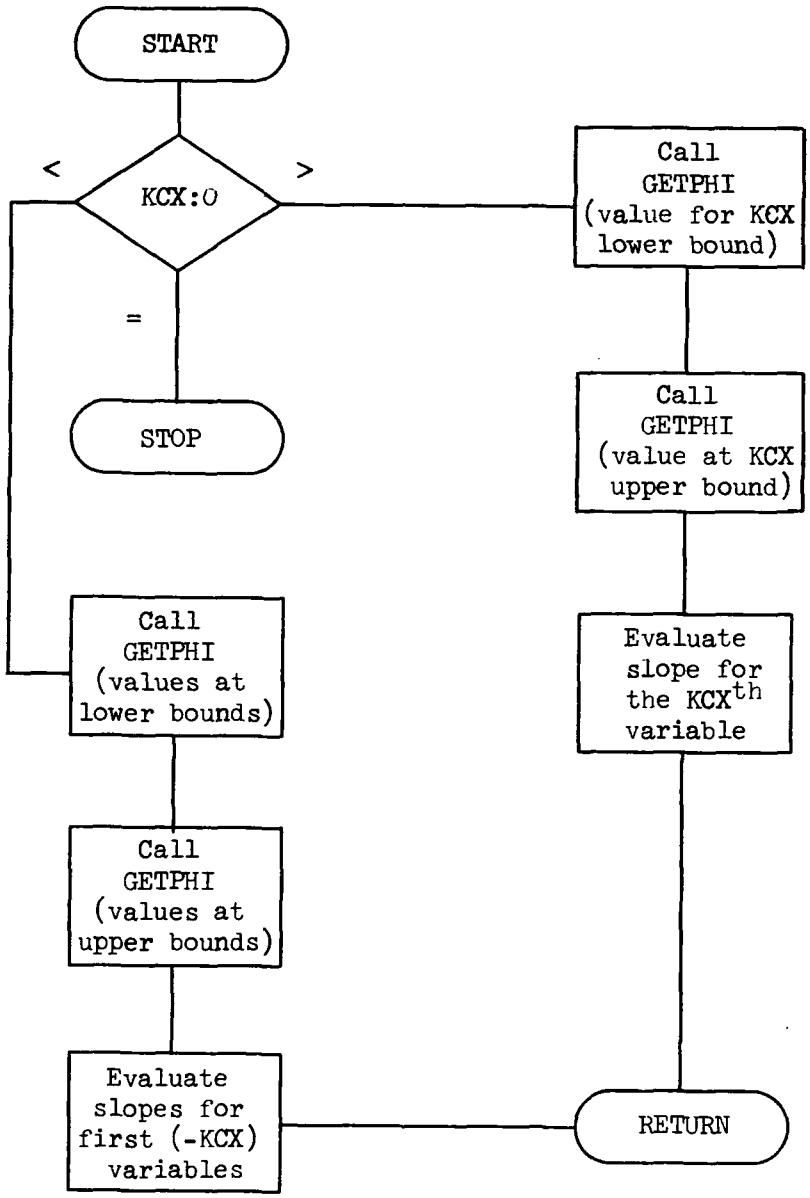

SUBROUTINE PARAMS

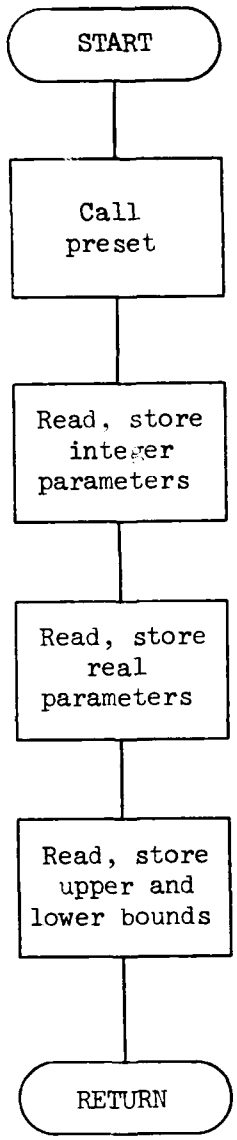

SUBROUTINE PRESET

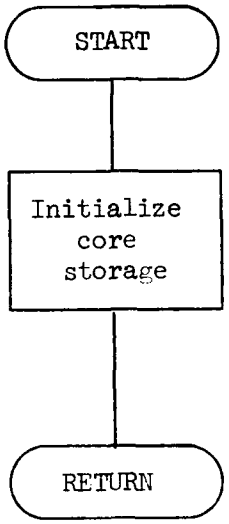

SUBROUTINE INITA

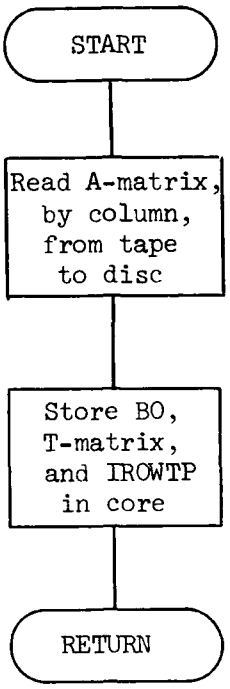

Subroutine LP

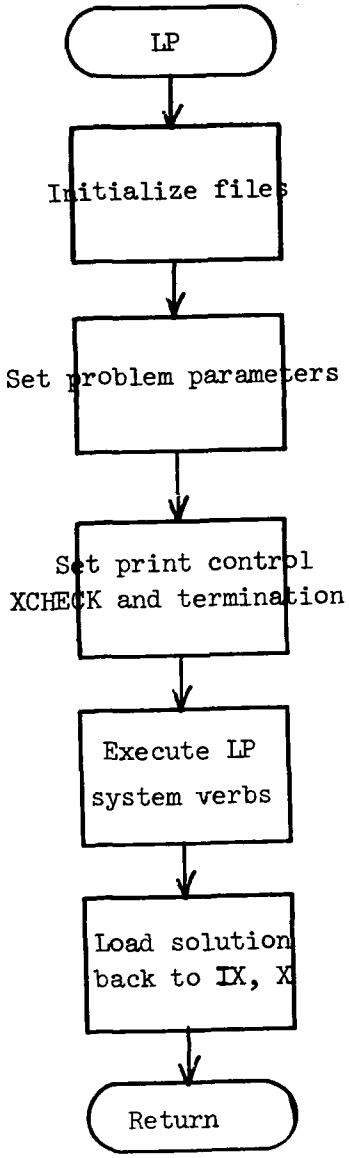

Subroutine EXITS

User changable EXITS program called after all control points in PRIMAL.

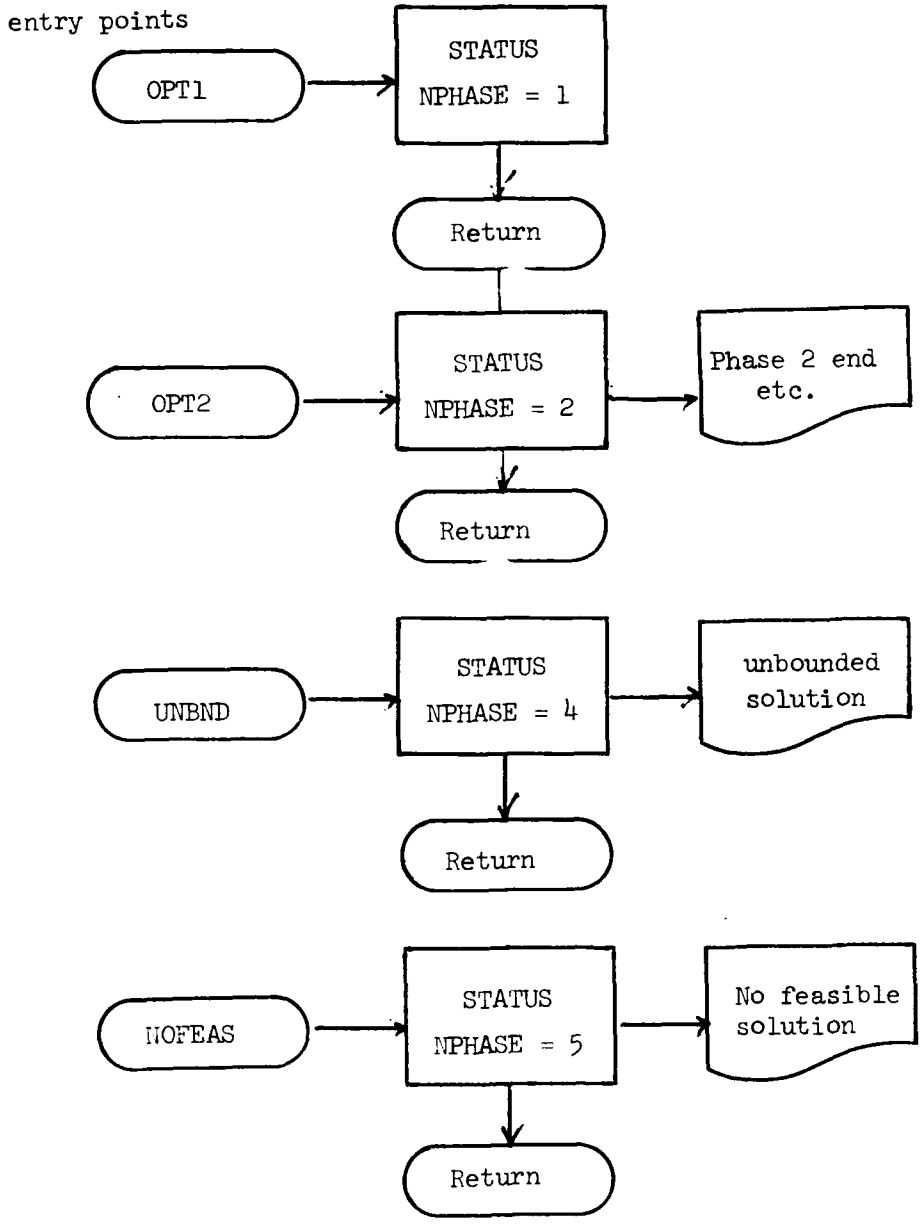

Subroutine SETUP

SETUP 1.

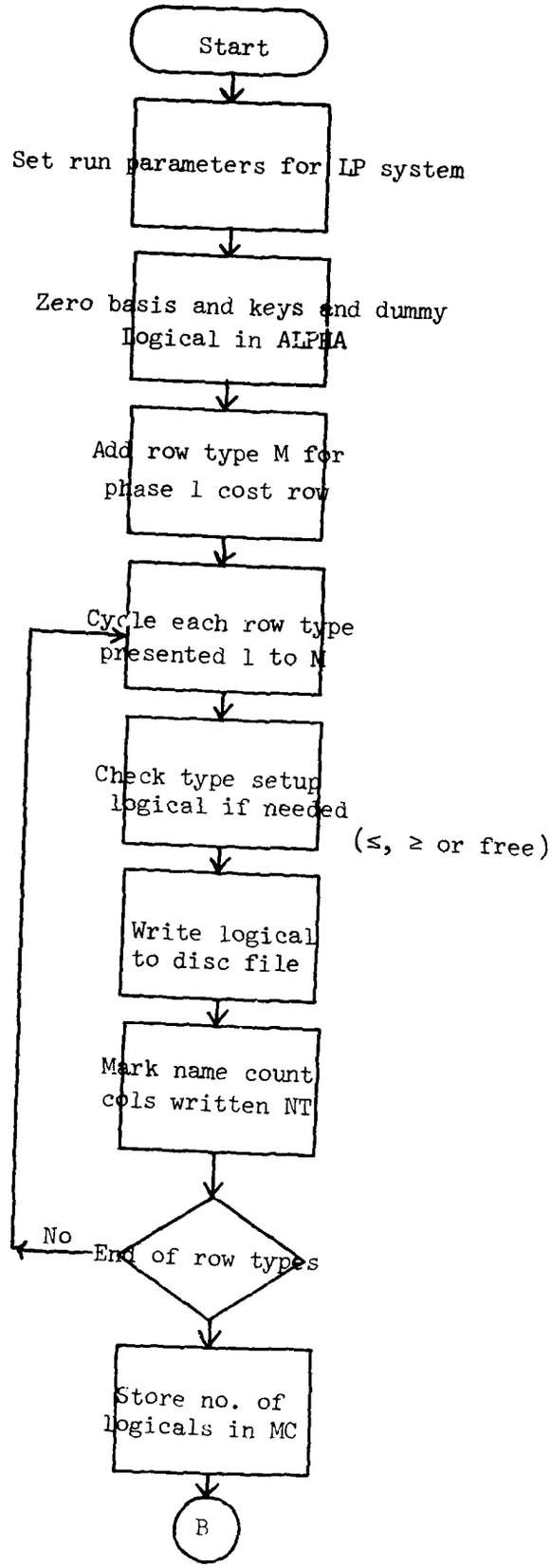

SETUP 2.

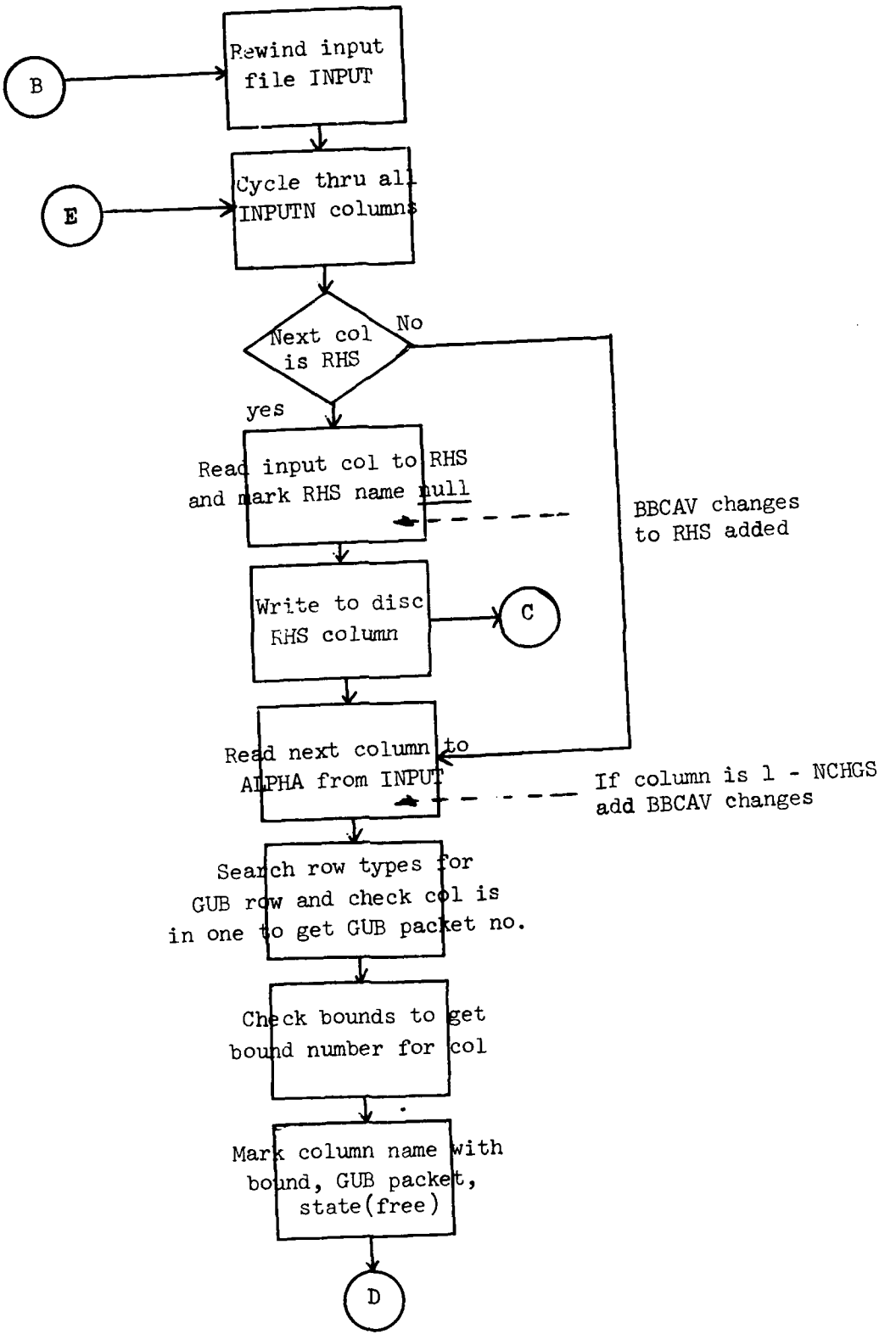
B
Rewind input file INPUT
E
Cycle thru all INPUTN columns
Next col is RHS
No
yes
Read input col to RHS and mark RHS name null
BBCAV changes to RHS added
Write to disc RHS column
C
Read next column to ALPHA from INPUT
If column is 1 - NCHGS add BBCAV changes
Search row types for GUB row and check col is in one to get GUB packet no.
Check bounds to get bound number for col
Mark column name with bound, GUB packet, state(free)
D

SETUP 3.

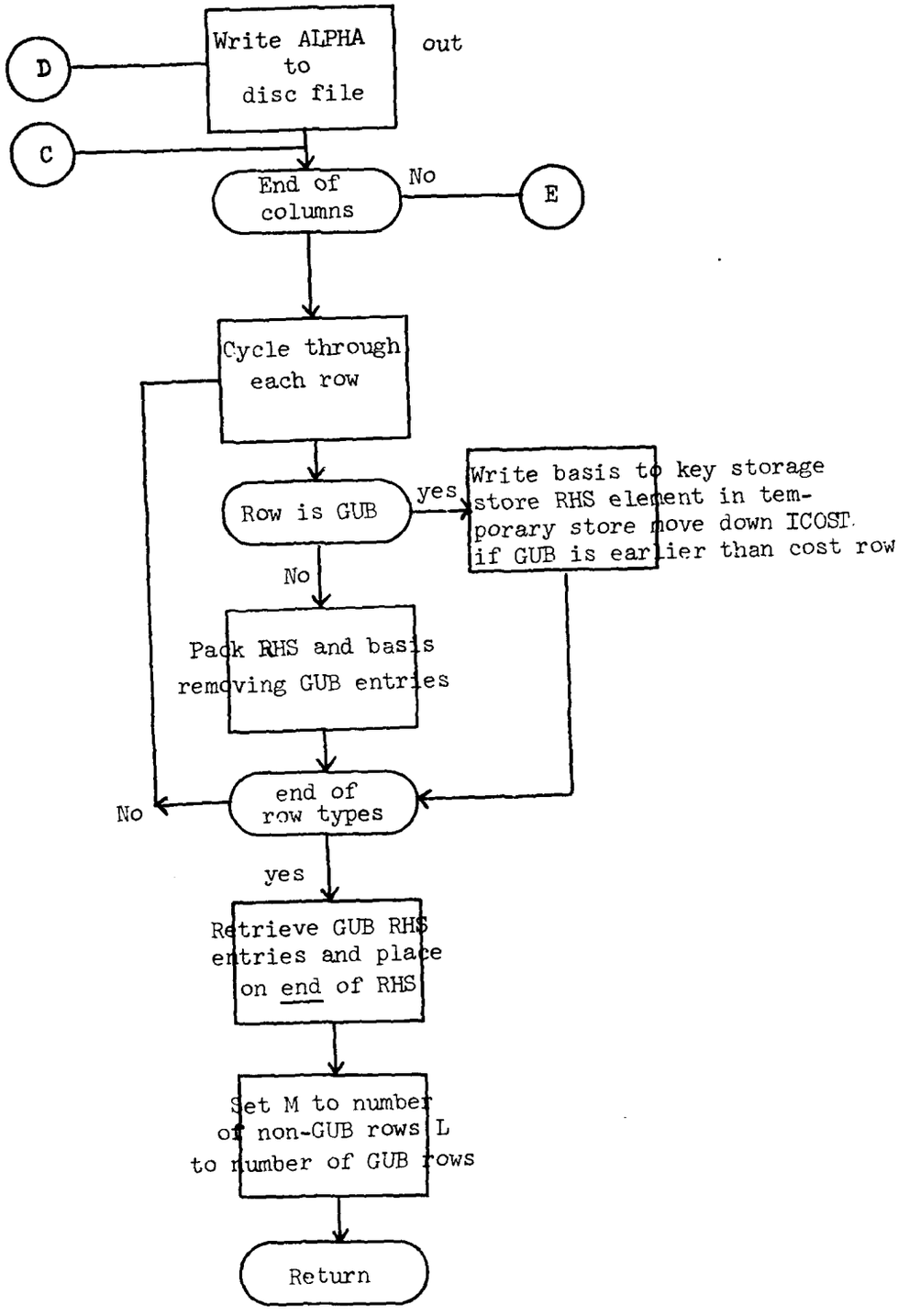
Write ALPHA to disc file
out
D
C
End of columns
No
E
Cycle through each row
Row is GUB
yes
Write basis to key storage store RHS element in temporary store move down ICOST if GUB is earlier than cost row
No
Pack RHS and basis removing GUB entries
end of row types
No
yes
Retrieve GUB RHS entries and place on end of RHS
Set M to number of non-GUB rows L to number of GUB rows
Return

Subroutine IO

IO 1.

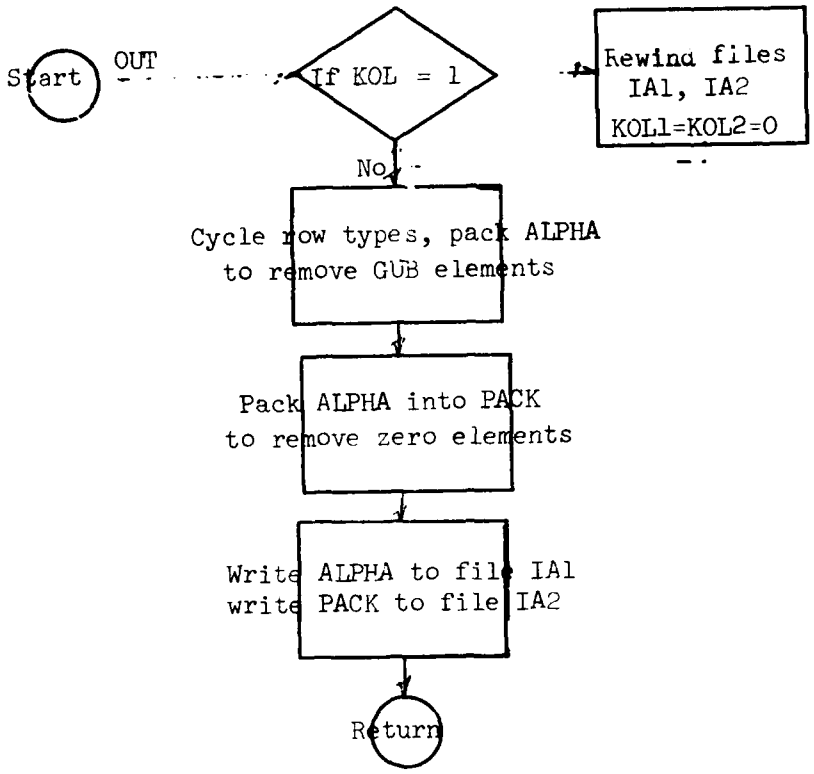

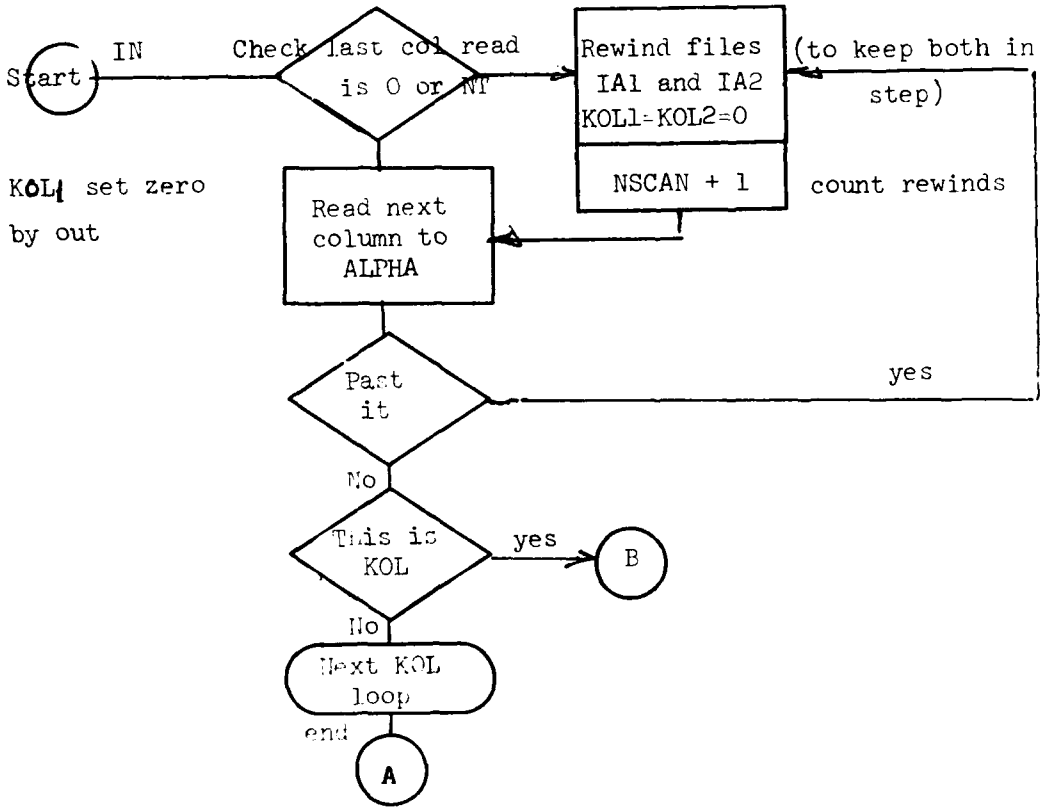

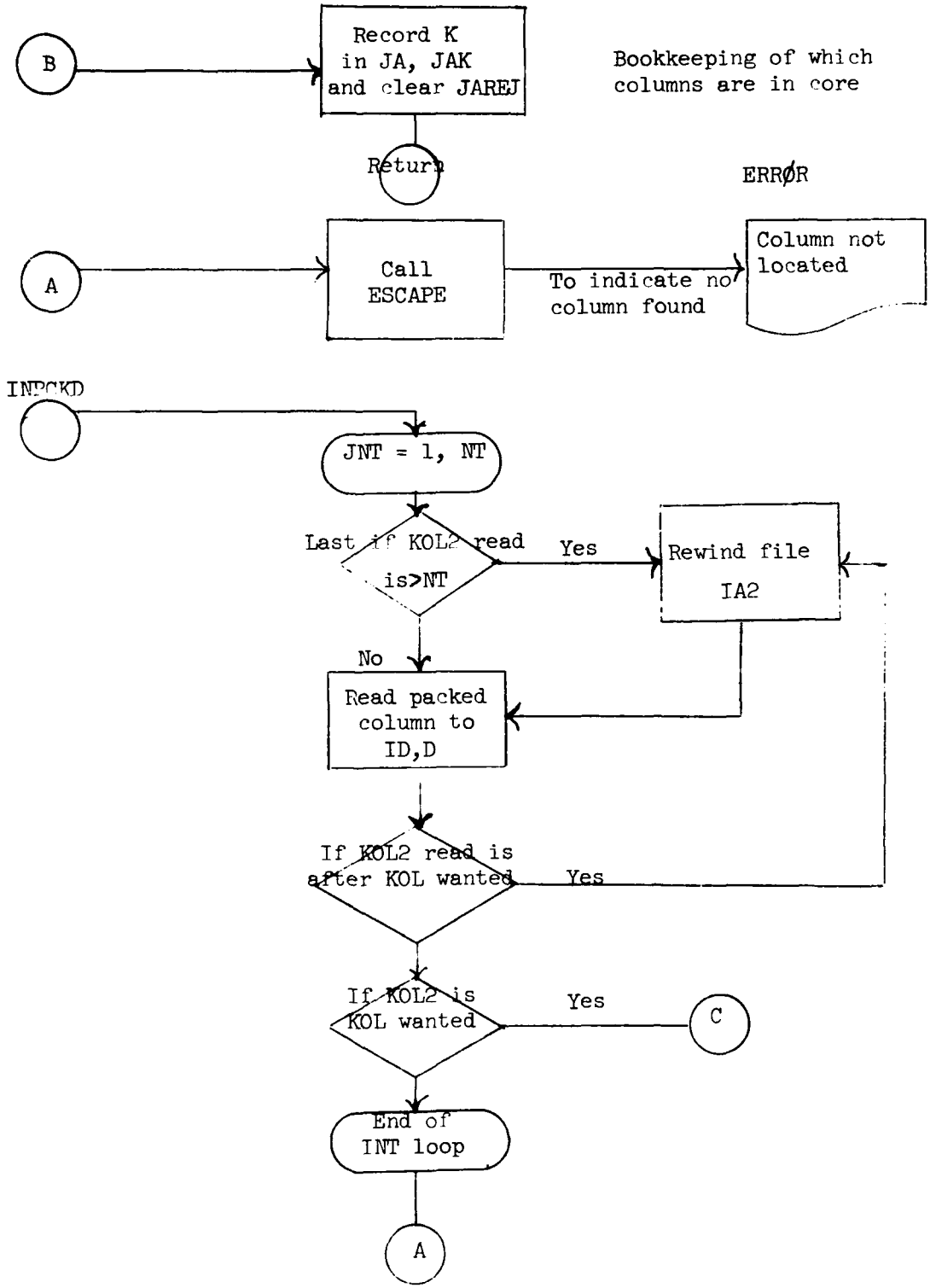
B
Record K in JA, JAK and clear JAREJ
Bookkeeping of which columns are in core
Return
ERRØR
A
Call ESCAPE
To indicate no column found
Column not located
INPCKD
JNT = 1, NT
Last if KOL2 read is>NT
Yes
Rewind file IA2
No
Read packed column to ID,D
If KOL2 read is after KOL wanted
Yes
If KOL2 is KOL wanted
Yes
C
End of INT loop
A

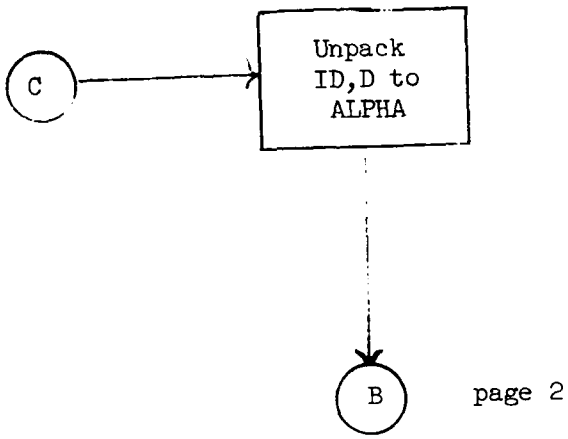
C
Unpack
ID,D to
ALPHA
B
page 2

Subroutine MAPIN
Two entry points

(1) MAPIN - Reads MAPIN cards from file IMAP and sets NAME record reads inverse from file INPUT to B.

(2) INMAP - Loads file IMAP from input card stream.

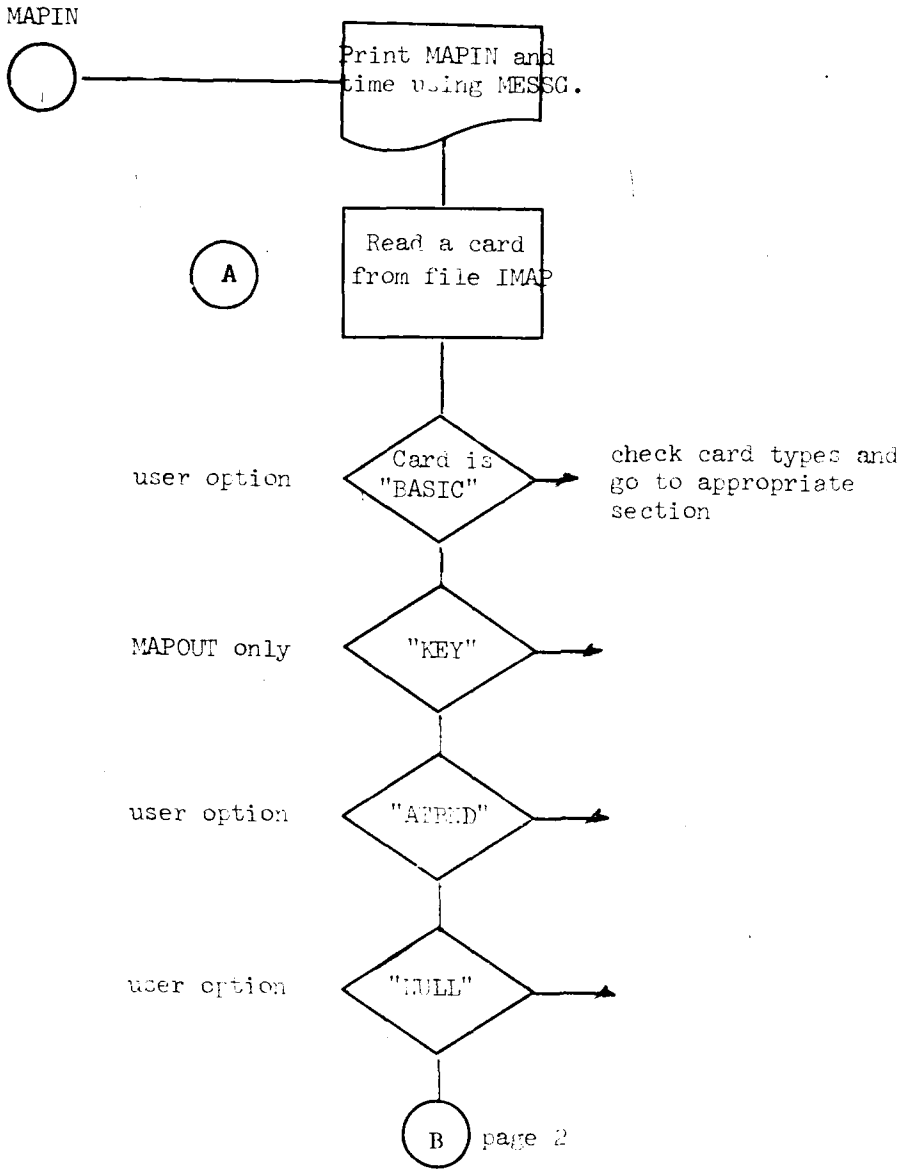

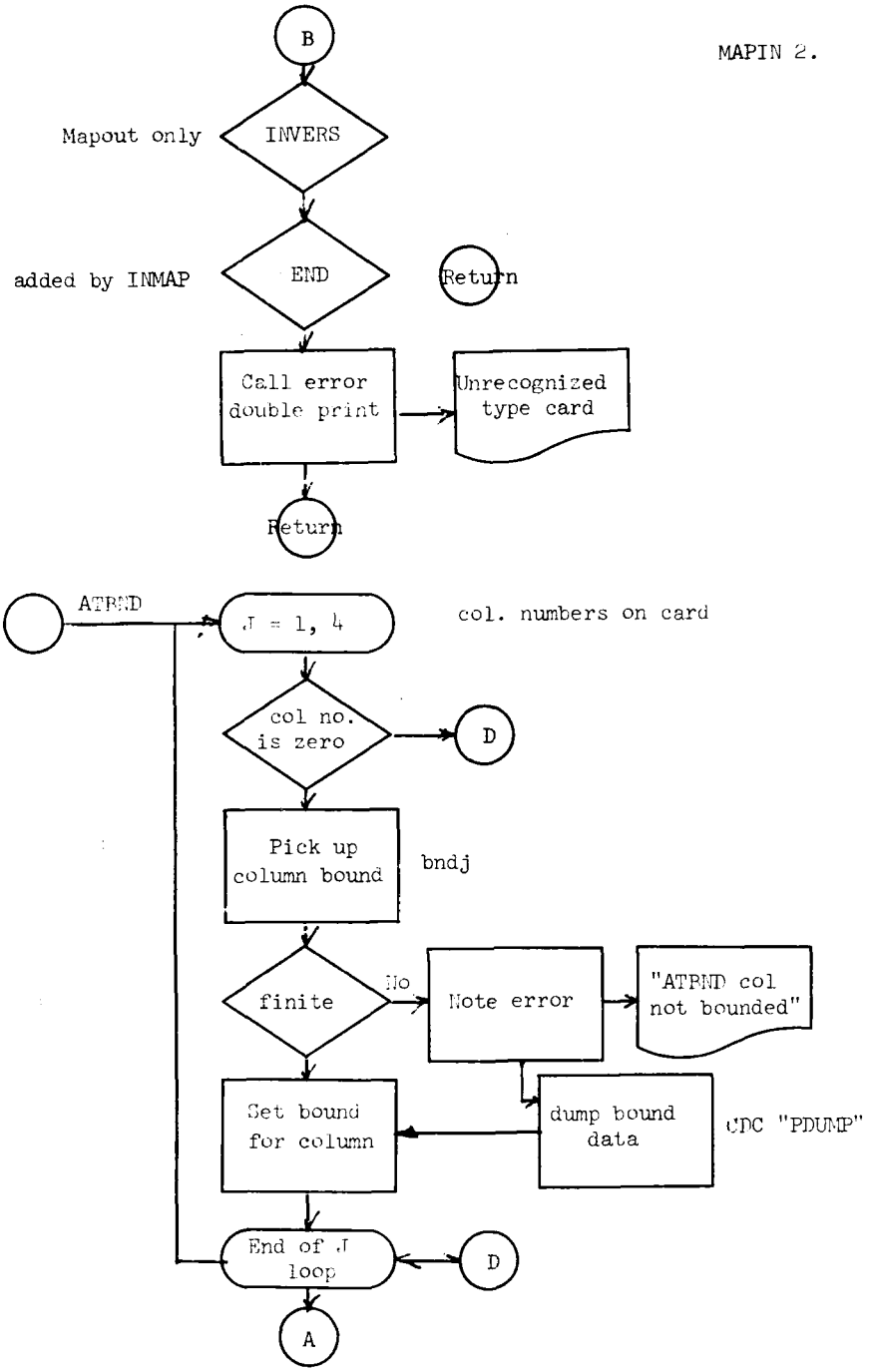
B
Mapout only
INVERS
added by INMAP
END
Return
Call error double print
Unrecognized type card
Return
ATRND
J = 1, 4
col. numbers on card
col no. is zero
D
Pick up column bound
bndj
finite
No
Note error
"ATRND col not bounded"
Set bound for column
dump bound data
CDC "PDUMP"
End of J loop
D
A

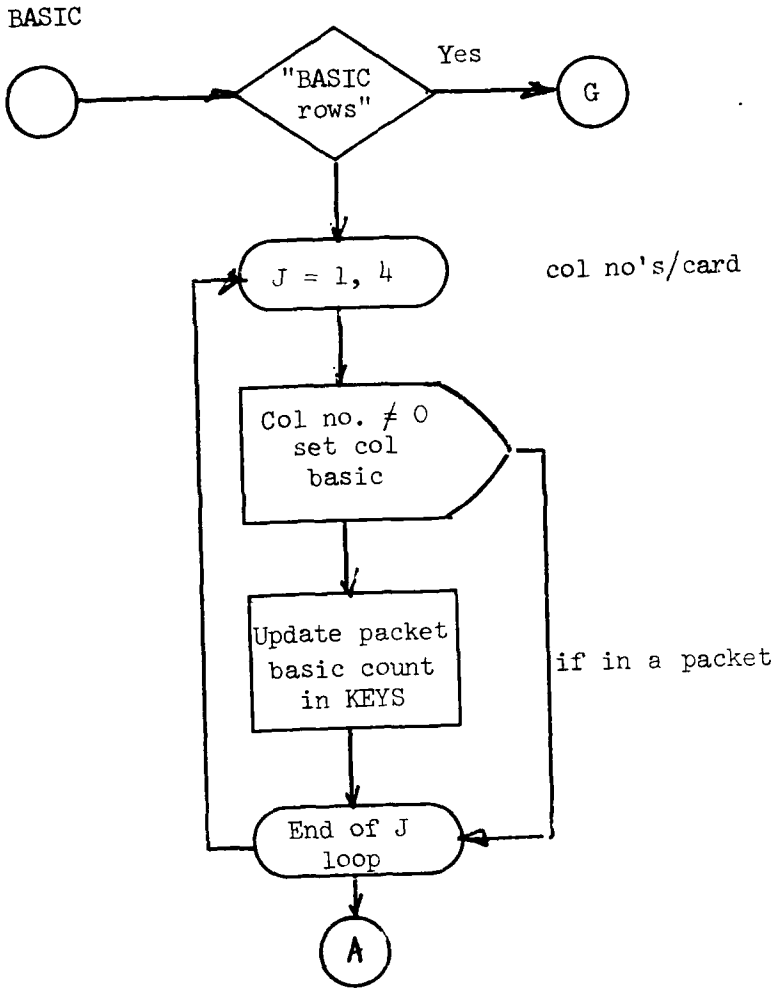
BASIC
"BASIC rows"
Yes
G
J = 1, 4
col no's/card
Col no. ≠ 0 set col basic
Update packet basic count in KEYS
if in a packet
End of J loop
A

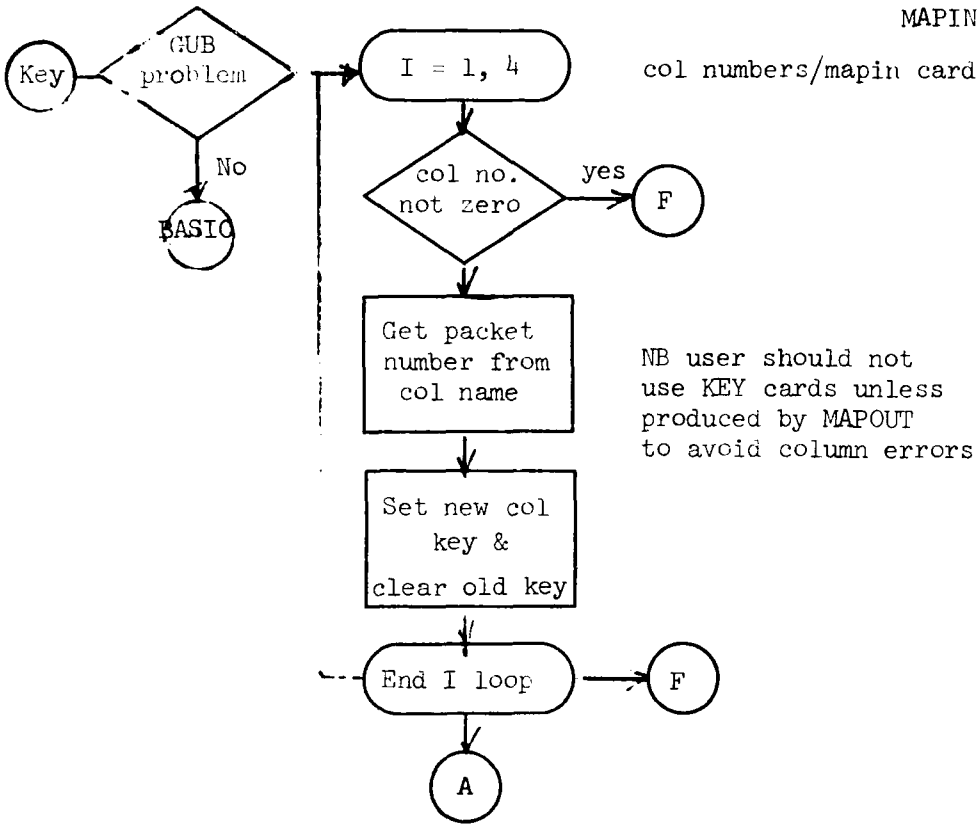
Key
GUB problem
No
BASIC
I = 1, 4
col numbers/mapin card
col no. not zero
yes
F
Get packet number from col name
NB user should not use KEY cards unless produced by MAPOUT to avoid column errors
Set new col key & clear old key
End I loop
F
A

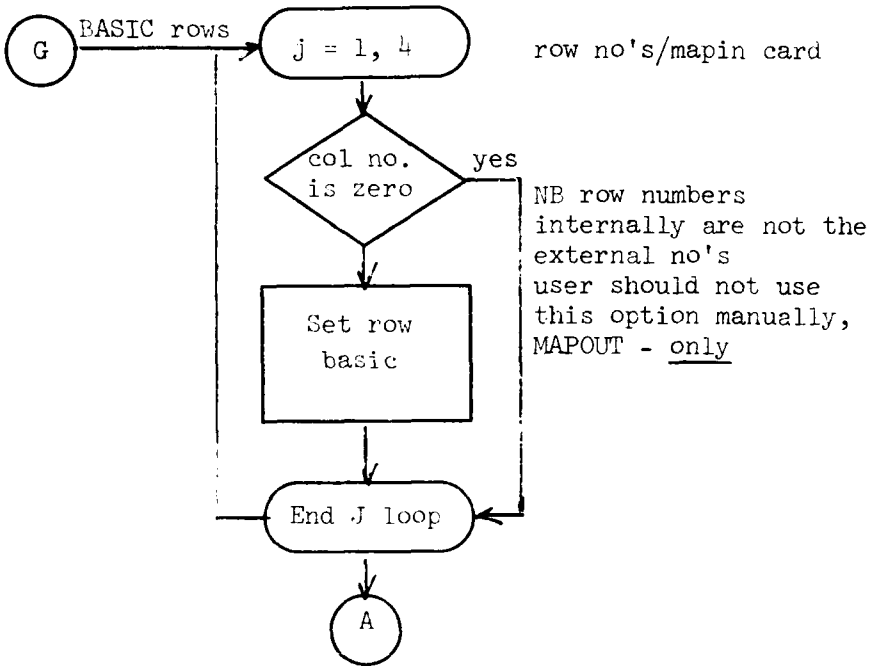
G
BASIC rows
j = 1, 4
row no's/mapin card
col no. is zero
yes
NB row numbers internally are not the external no's user should not use this option manually, MAPOUT - only
Set row basic
End J loop
A

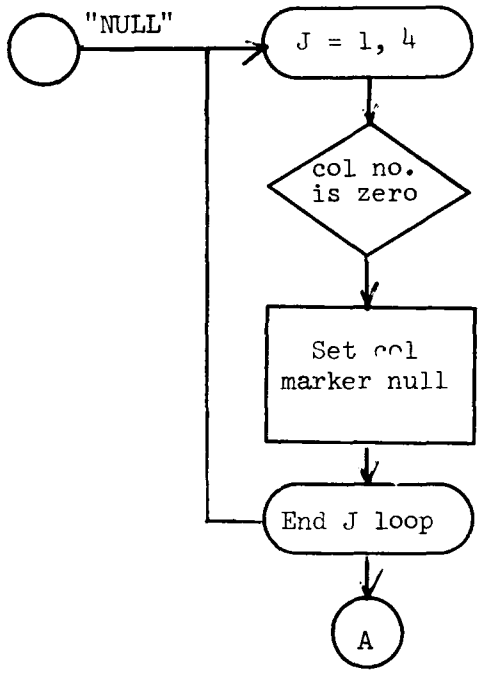
"NULL"
J = 1, 4
col no's/mapin card
col no. is zero
user option
Set col marker null
End J loop
A

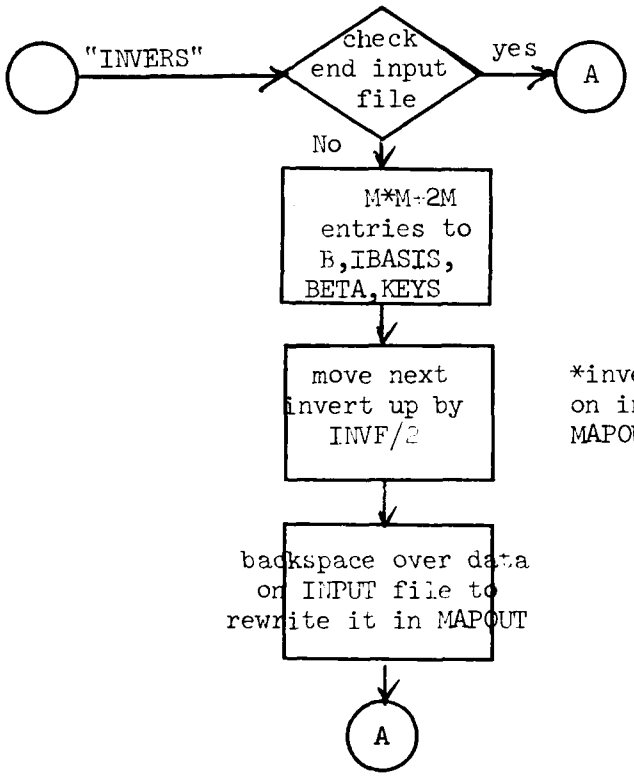
"INVERS"
check end input file
yes
A
No
M*M+2M entries to B,IBASIS, BETA,KEYS
move next invert up by INVF/2
*inverse by rows placed on input file by MAPOUT
backspace over data on INPUT file to rewrite it in MAPOUT
A

MAPIN 6.

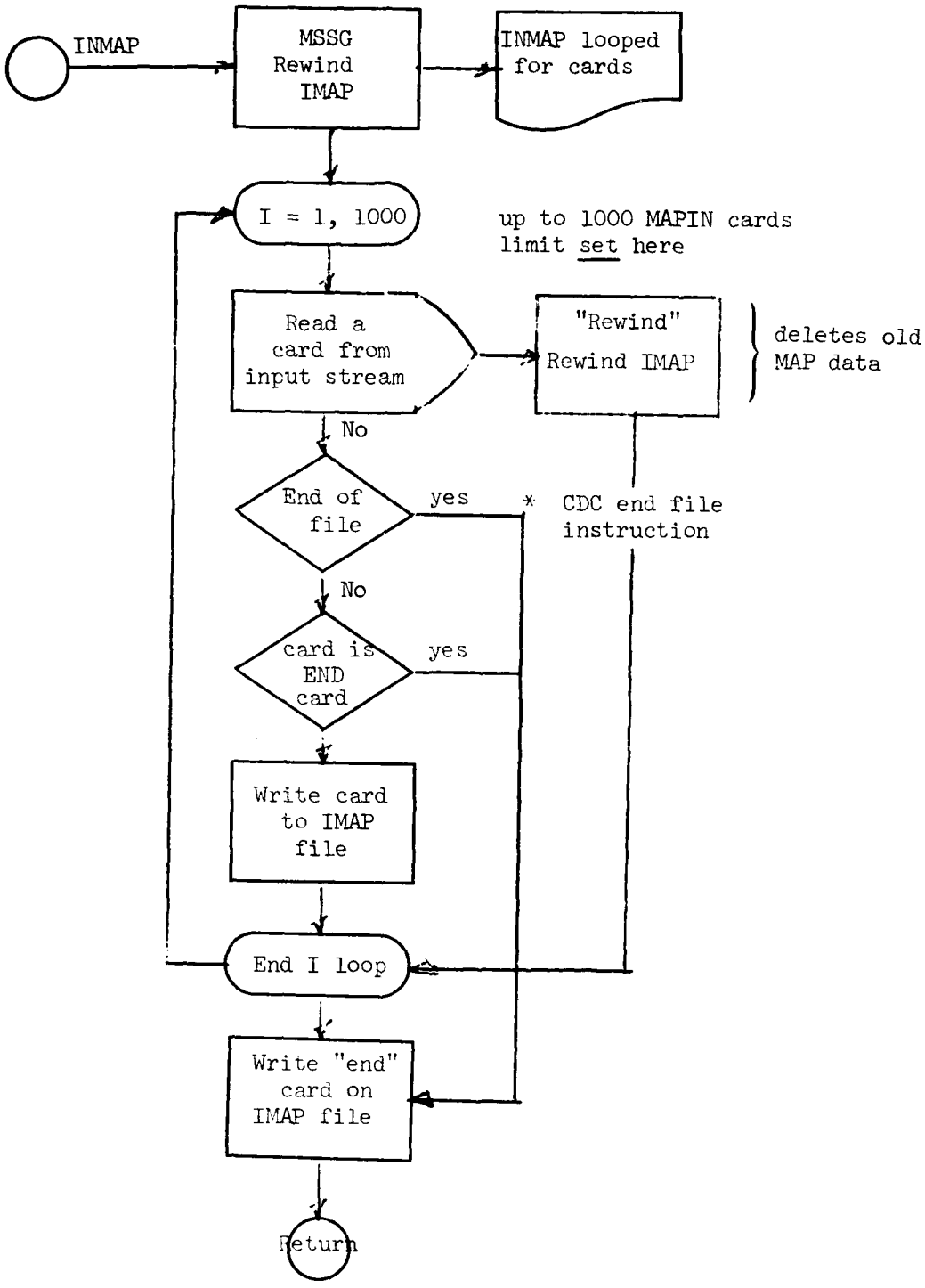
INMAP
MSSG
Rewind
IMAP
INMAP looped
for cards
I = 1, 1000
up to 1000 MAPIN cards
limit set here
Read a
card from
input stream
"Rewind"
Rewind IMAP
deletes old
MAP data
No
End of
file
yes
*
CDC end file
instruction
No
card is
END
card
yes
Write card
to IMAP
file
End I loop
Write "end"
card on
IMAP file
Return

MAPOUT outputs on file IMAP a BCD card image definition of variables and inverse states compatible with MAPIN, whenever called and prints the current solution.

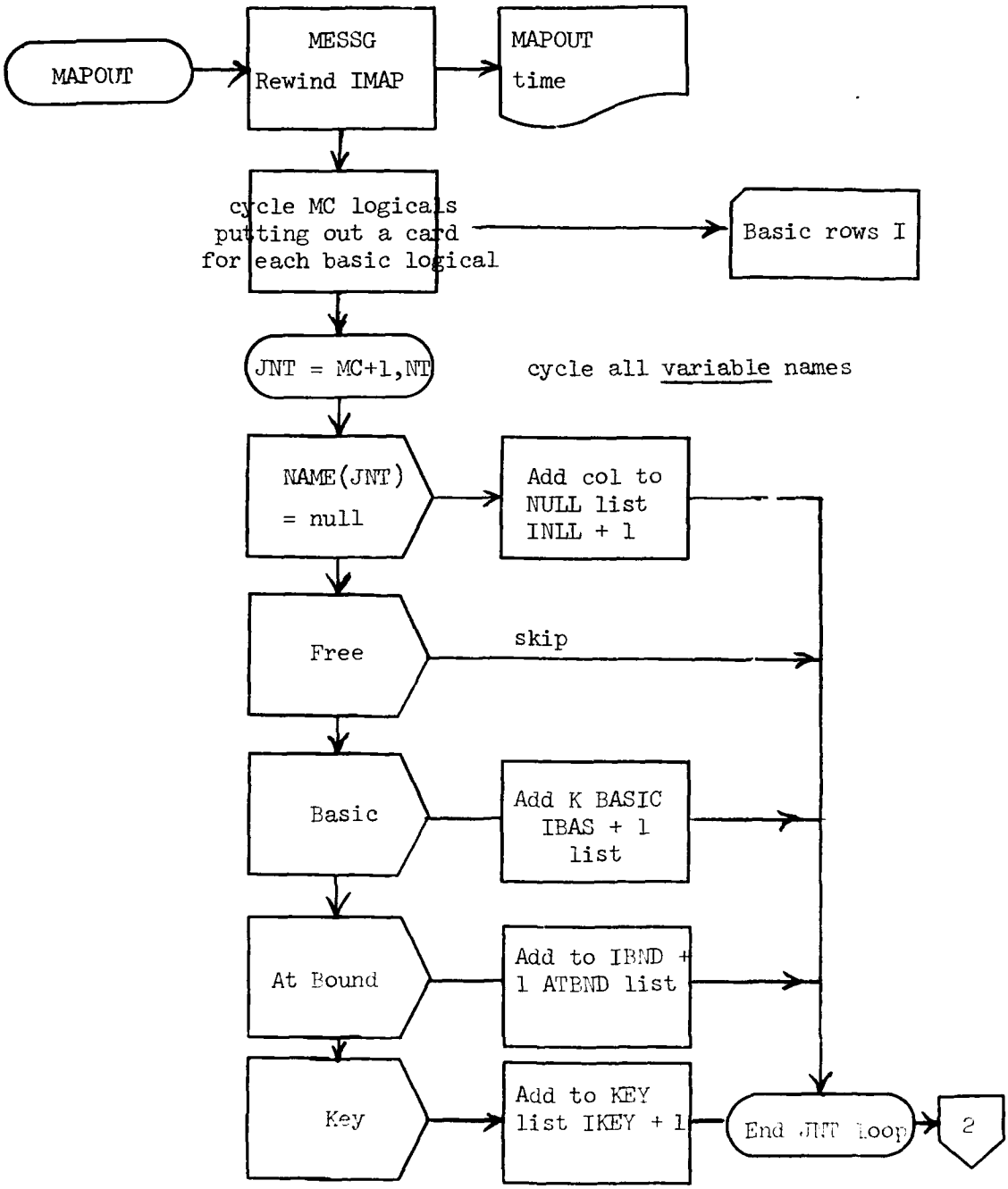

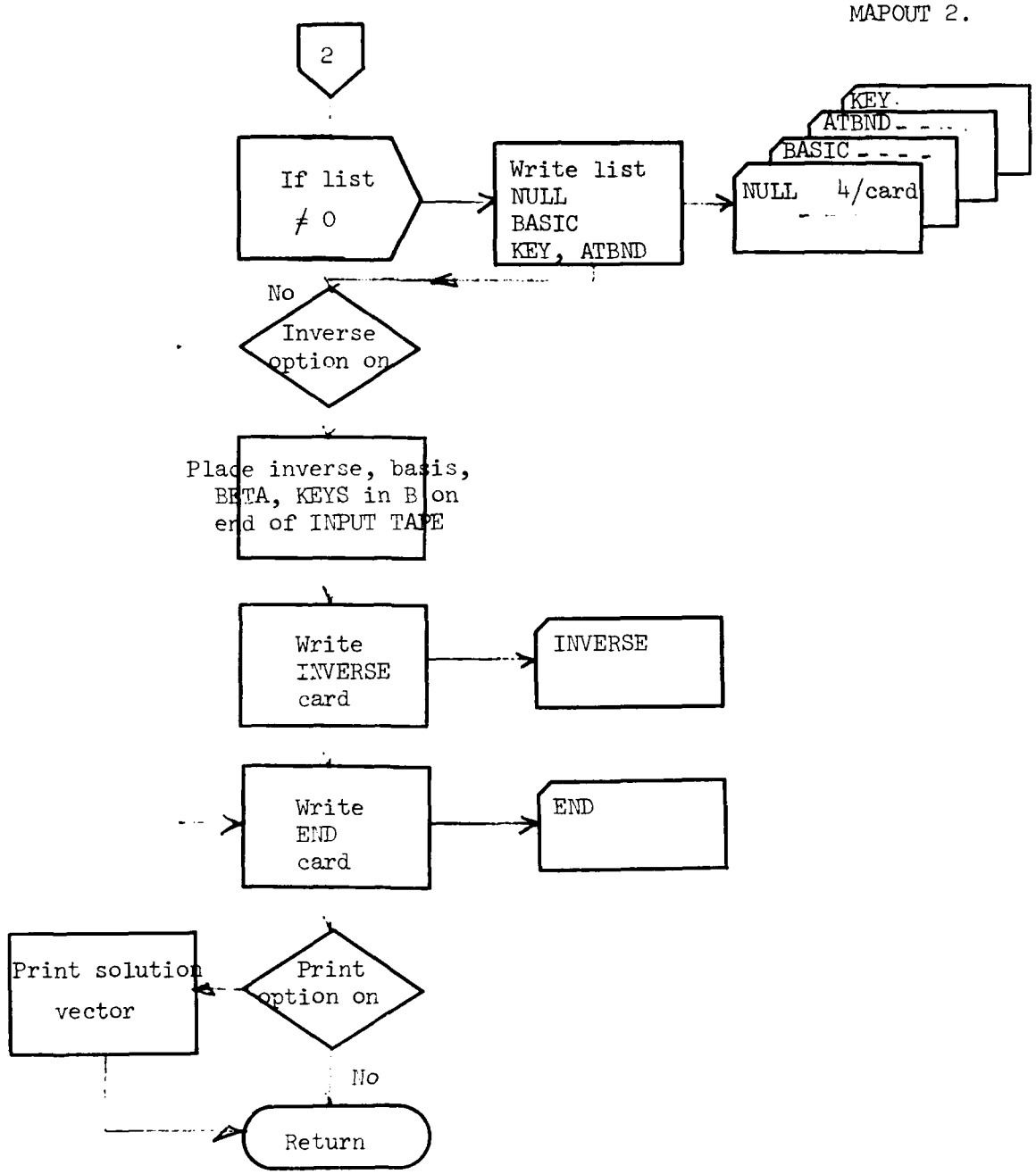

N.B. All MAPOUT cards can be generated manually. If they are inconsistant MAPIN uses the last setting of any column.

Subroutine INVERT

INVERT 1

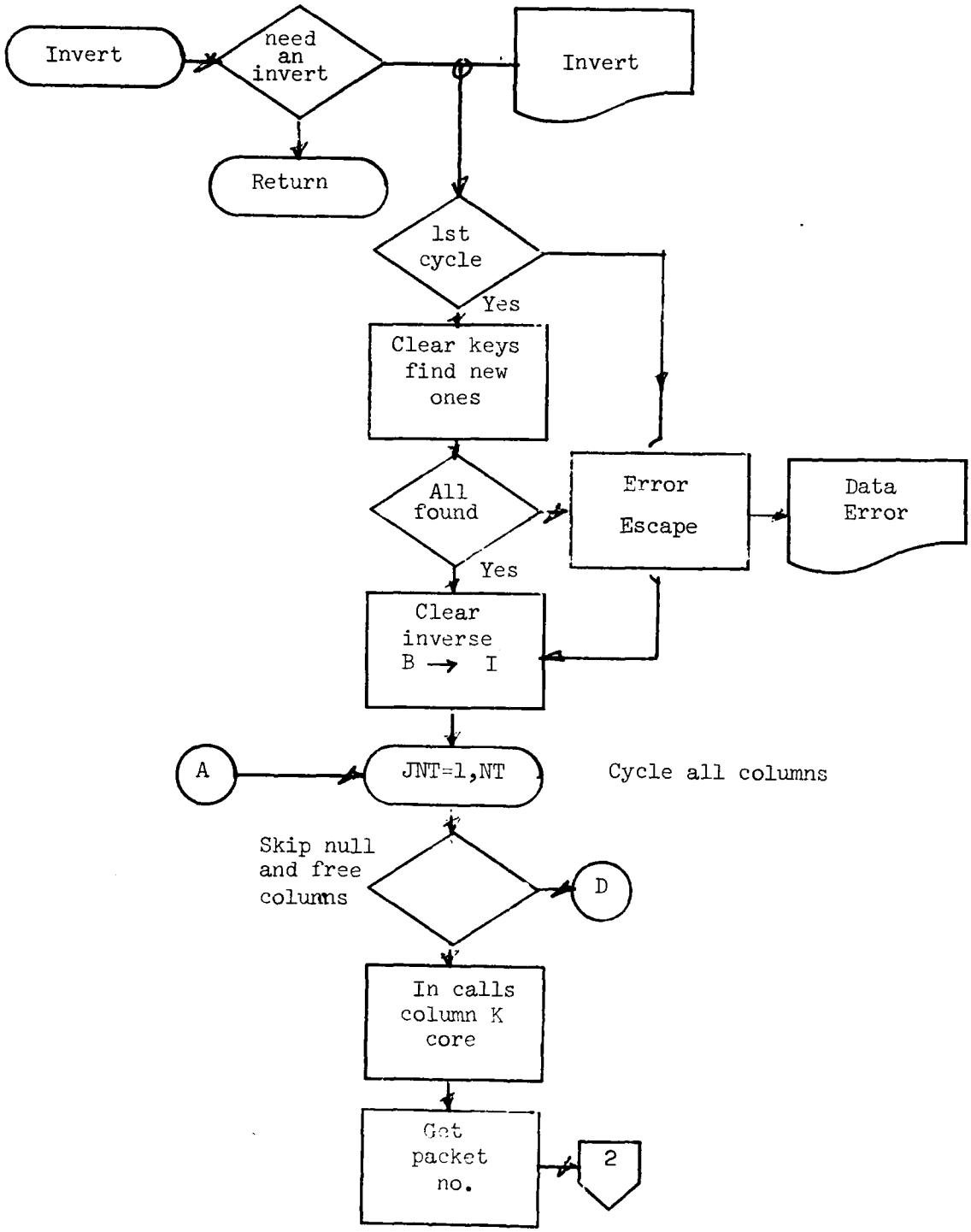

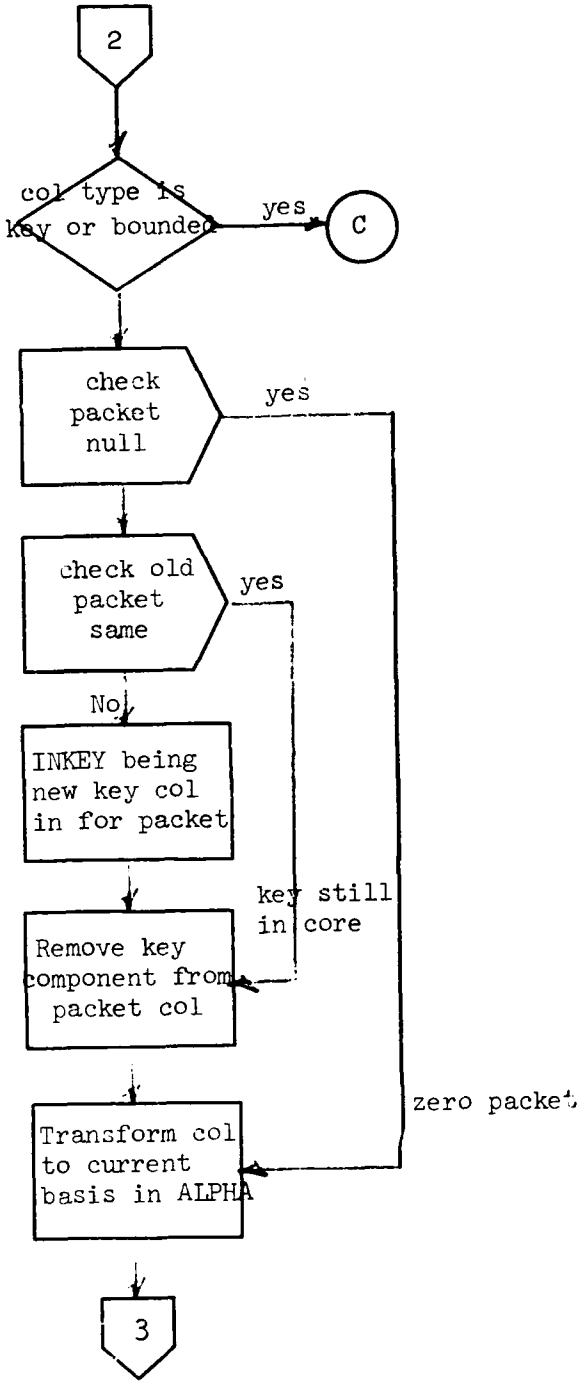
2
col type is key or bounded
yes
C
check packet null
yes
check old packet same
yes
No
INKEY being new key col in for packet
key still in core
Remove key component from packet col
zero packet
Transform col to current basis in ALPHA
3

INVERT 3.

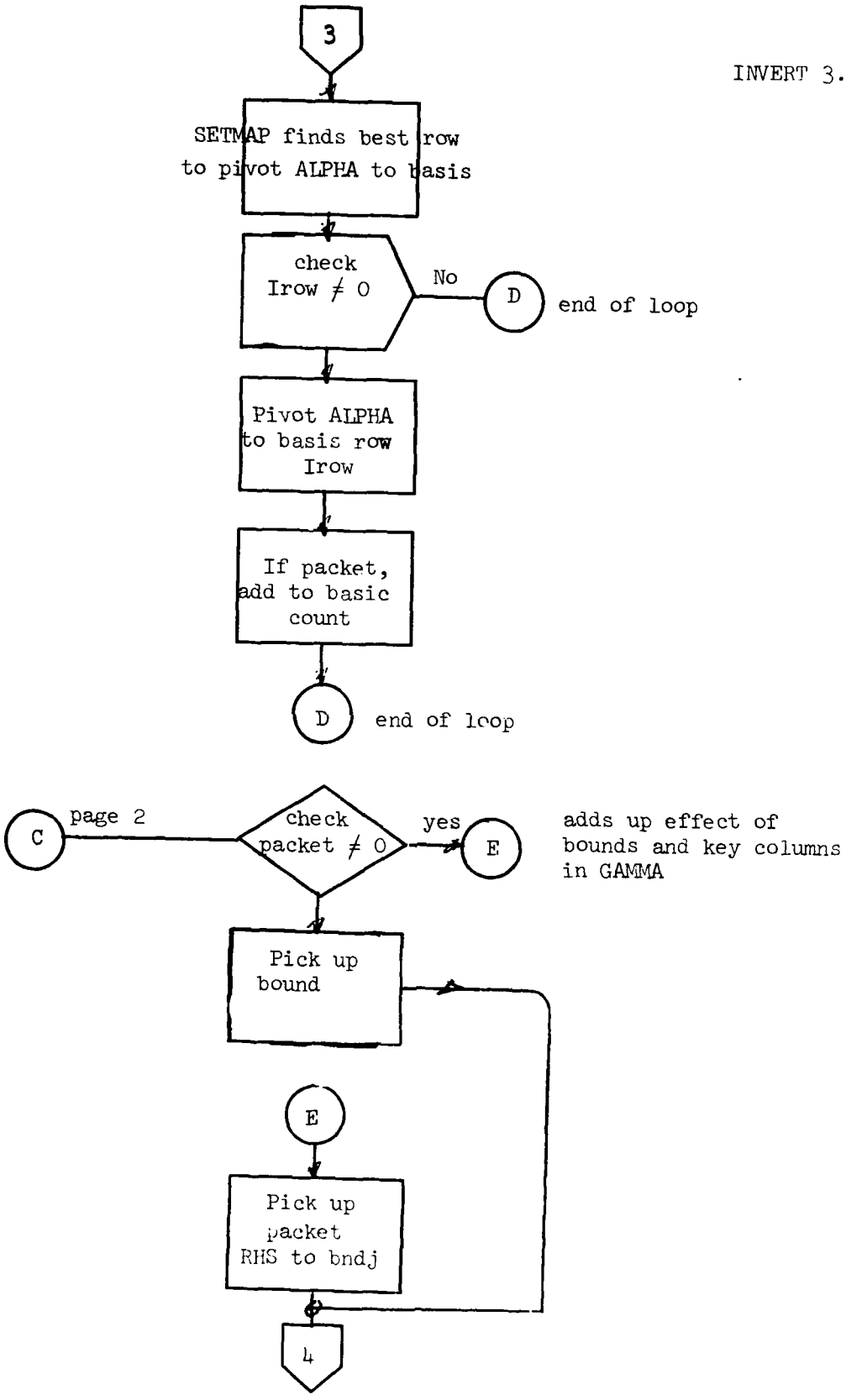
3
SETMAP finds best row to pivot ALPHA to basis
check Irow ≠ 0
No
D
end of loop
Pivot ALPHA to basis row Irow
If packet, add to basic count
D
end of loop
C
page 2
check packet ≠ 0
yes
E
adds up effect of bounds and key columns in GAMMA
Pick up bound
E
Pick up packet RHS to bndj
4

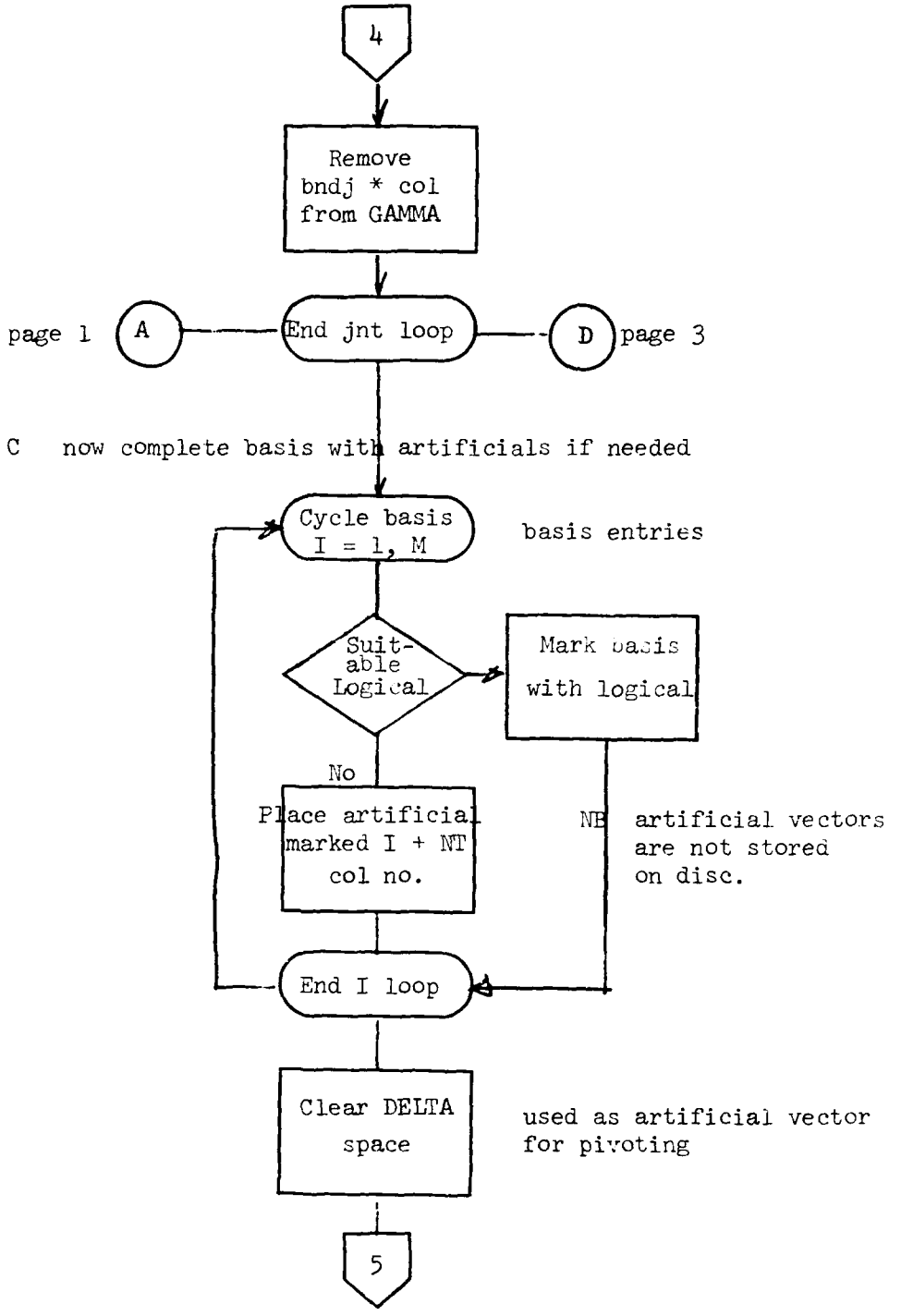
4
Remove bndj * col from GAMMA
page 1
A
End jnt loop
D
page 3
C now complete basis with artificials if needed
Cycle basis I = 1, M
basis entries
Suit-able Logical
Mark basis with logical
No
Place artificial marked I + NT col no.
NB artificial vectors are not stored on disc.
End I loop
Clear DELTA space
used as artificial vector for pivoting
5

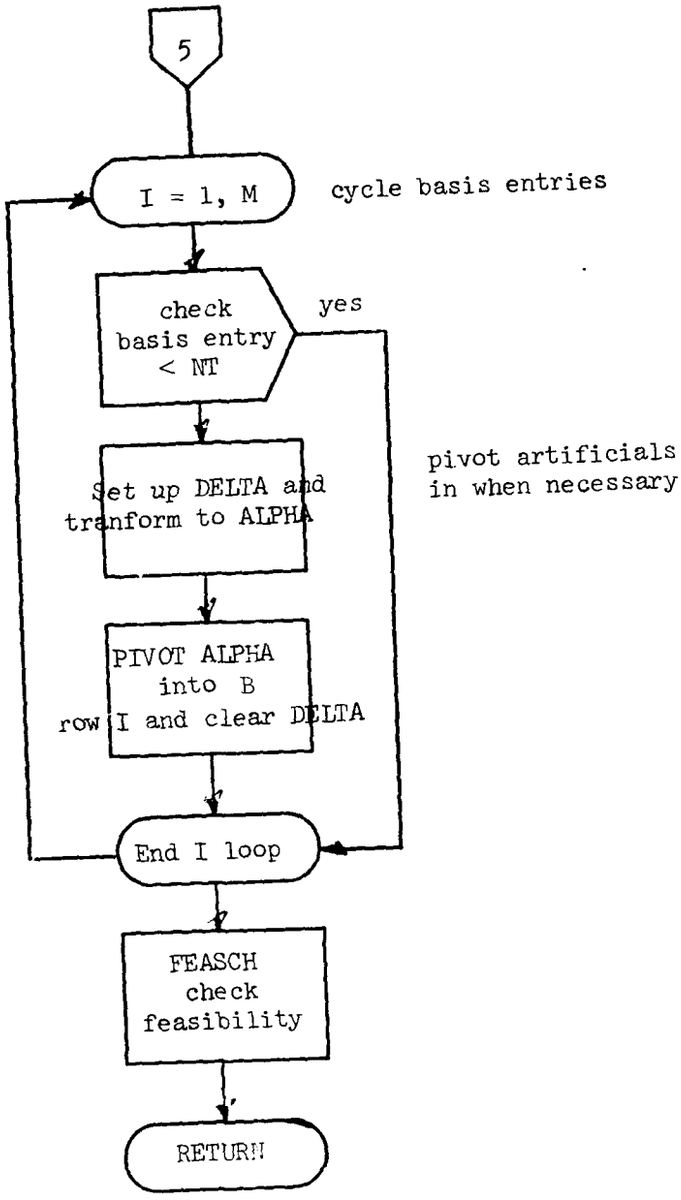
5
I = 1, M
cycle basis entries
check basis entry < NT
yes
Set up DELTA and tranform to ALPHA
pivot artificials in when necessary
PIVOT ALPHA into B row I and clear DELTA
End I loop
FEASCH check feasibility
RETURN

This routine computes the solution and checks feasibility.

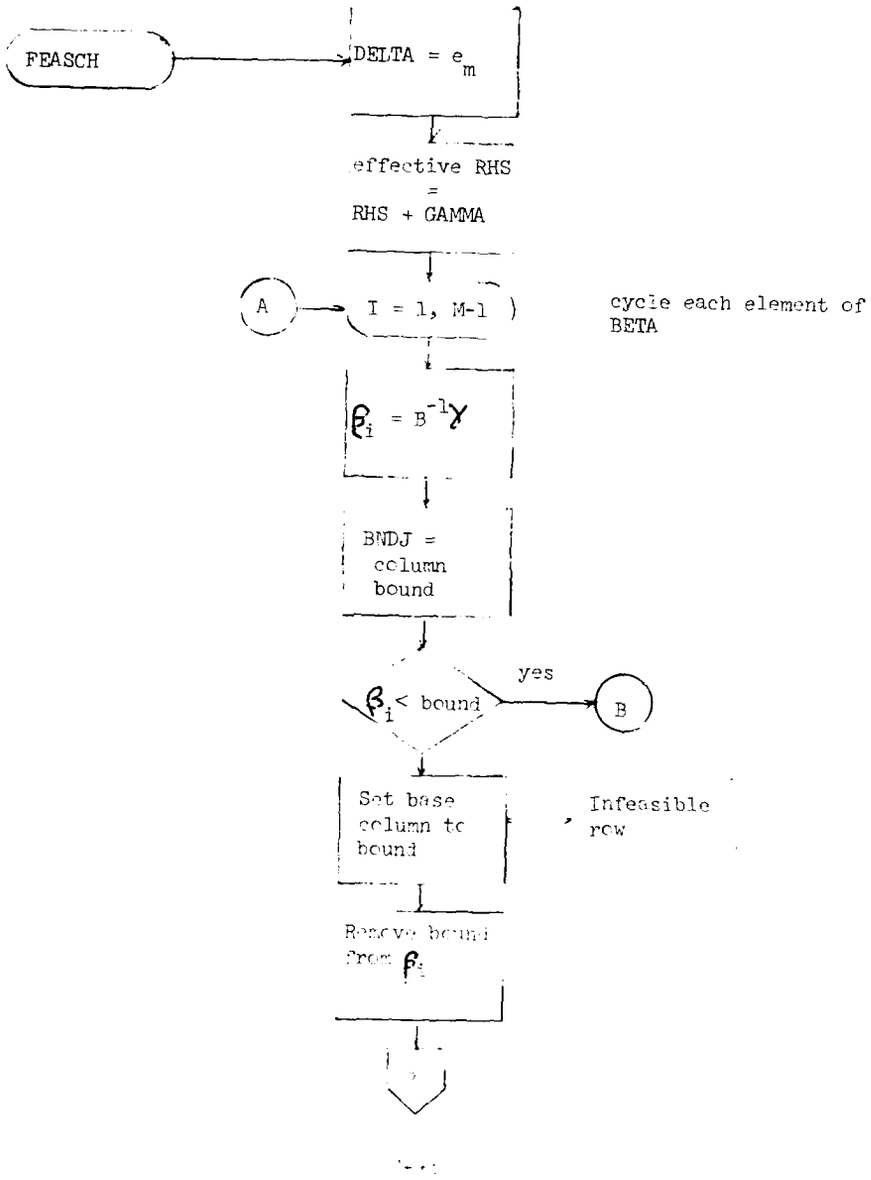

FEASCH2

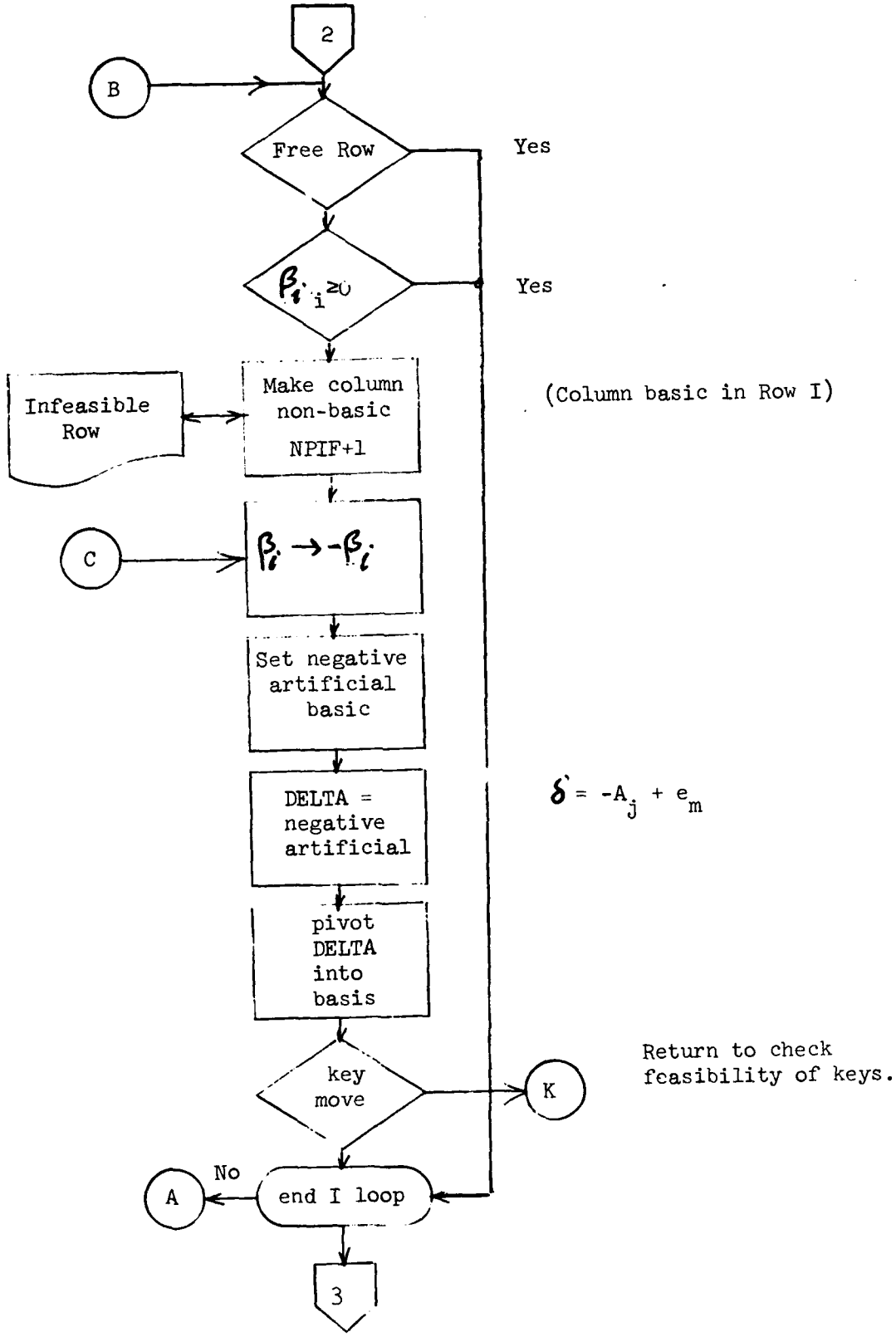
2
B
Free Row
Yes
β_i i ≥0
Yes
Infeasible Row
Make column non-basic NPIF+1
(Column basic in Row I)
C
$\beta_i \rightarrow -\beta_i$
Set negative artificial basic
DELTA = negative artificial
$\delta = -A_j + e_m$
pivot DELTA into basis
key move
K
Return to check feasibility of keys.
No
A
end I loop
3

FEASCH3

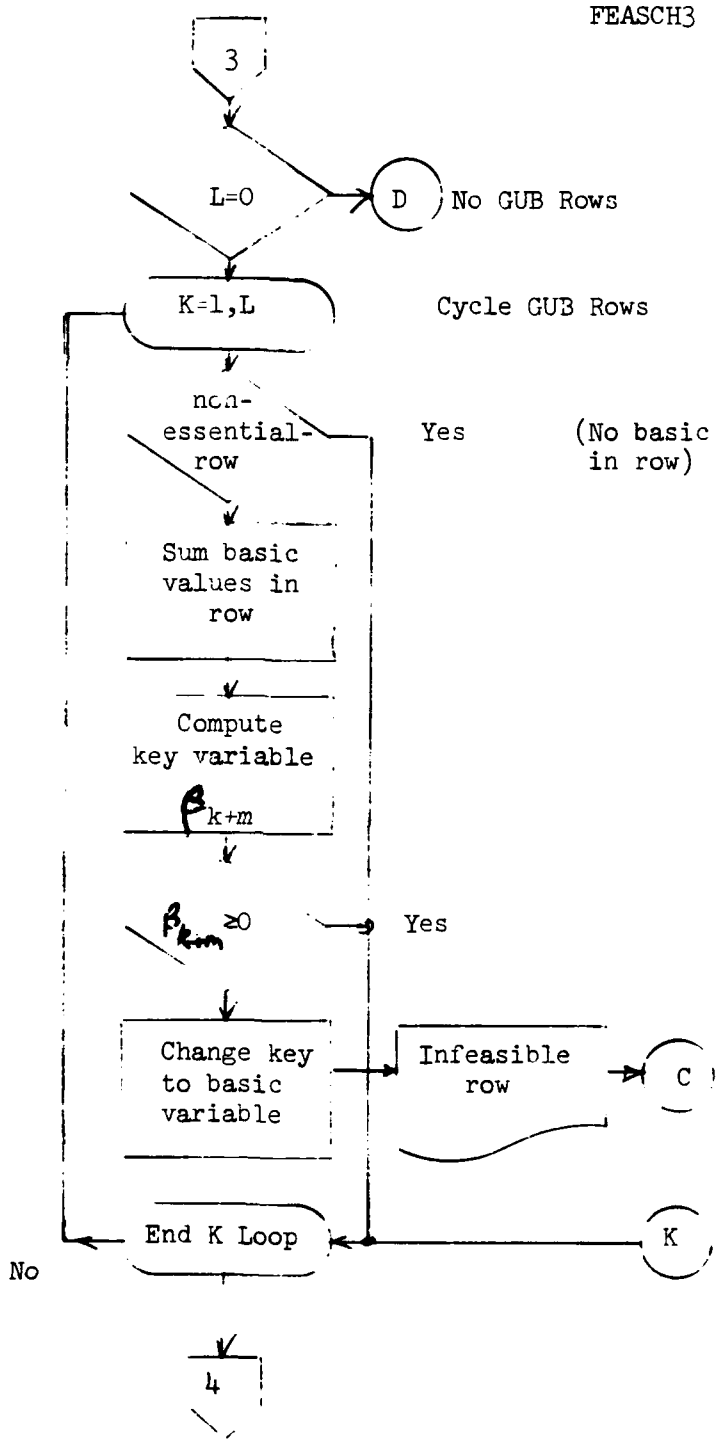
3
L=0
D
No GUB Rows
K=1,L
Cycle GUB Rows
non-essential-row
Yes
(No basic columns in row)
Sum basic values in row
Compute key variable
β_{k+m}
$\beta_{k+m} \geq 0$
Yes
Change key to basic variable
Infeasible row
C
End K Loop
K
No
4

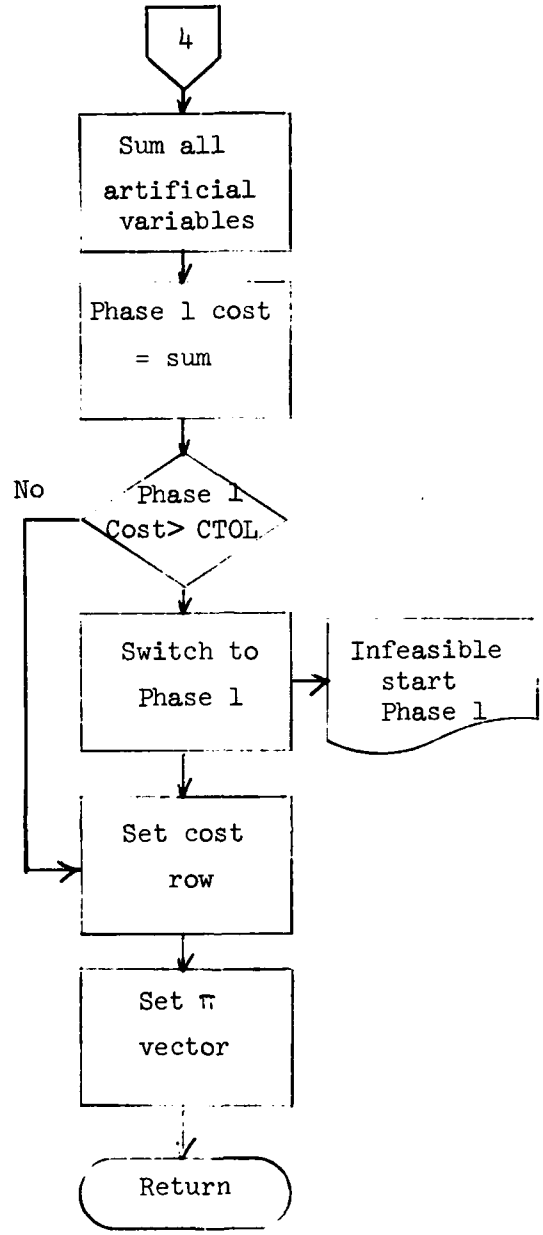
4
Sum all artificial variables
Phase 1 cost = sum
Phase 1 Cost> CTOL
No
Switch to Phase 1
Infeasible start Phase 1
Set cost row
Set π vector
Return

PRIMAL runs the 2 phase revised simplex algorithm from both phases and exits via EXIT.

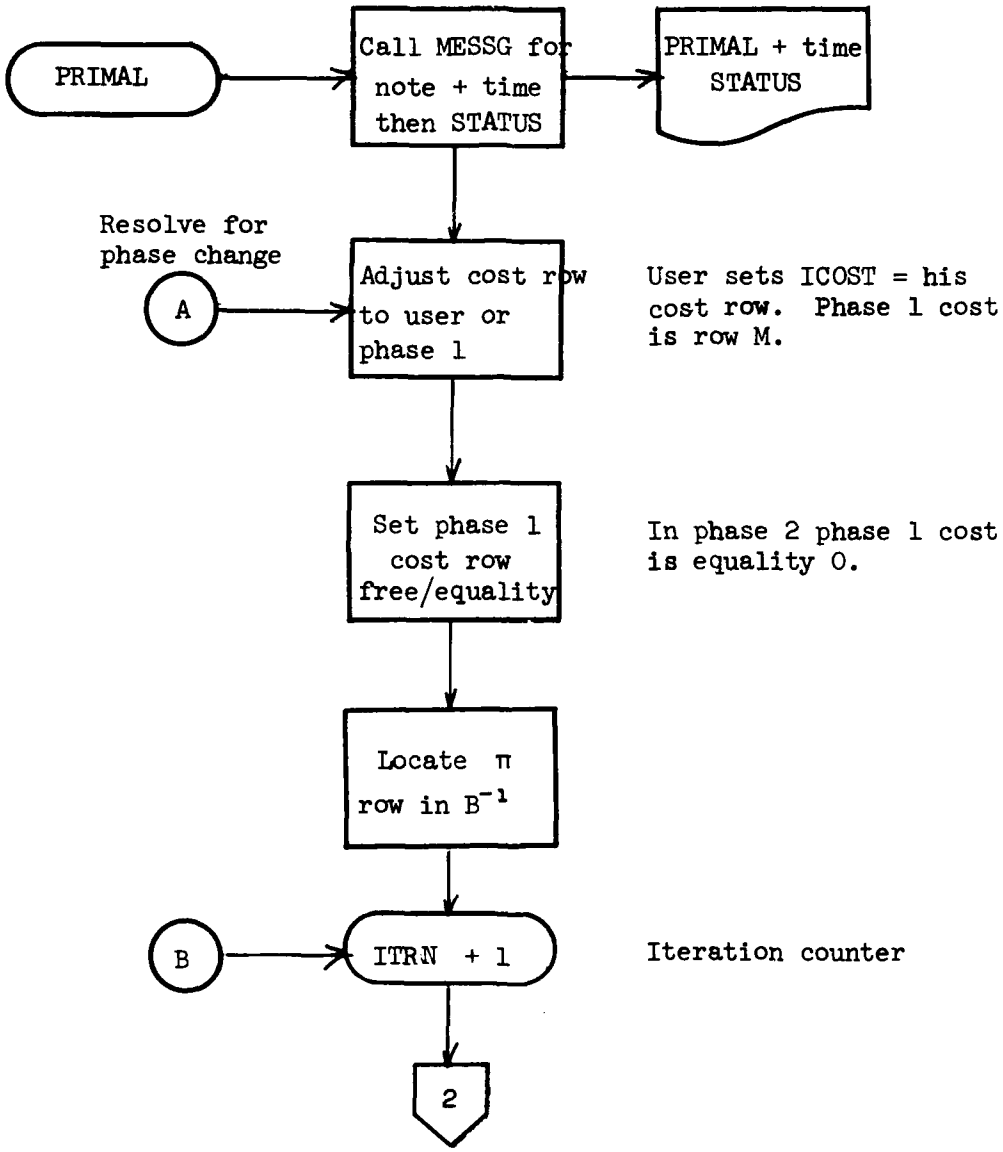

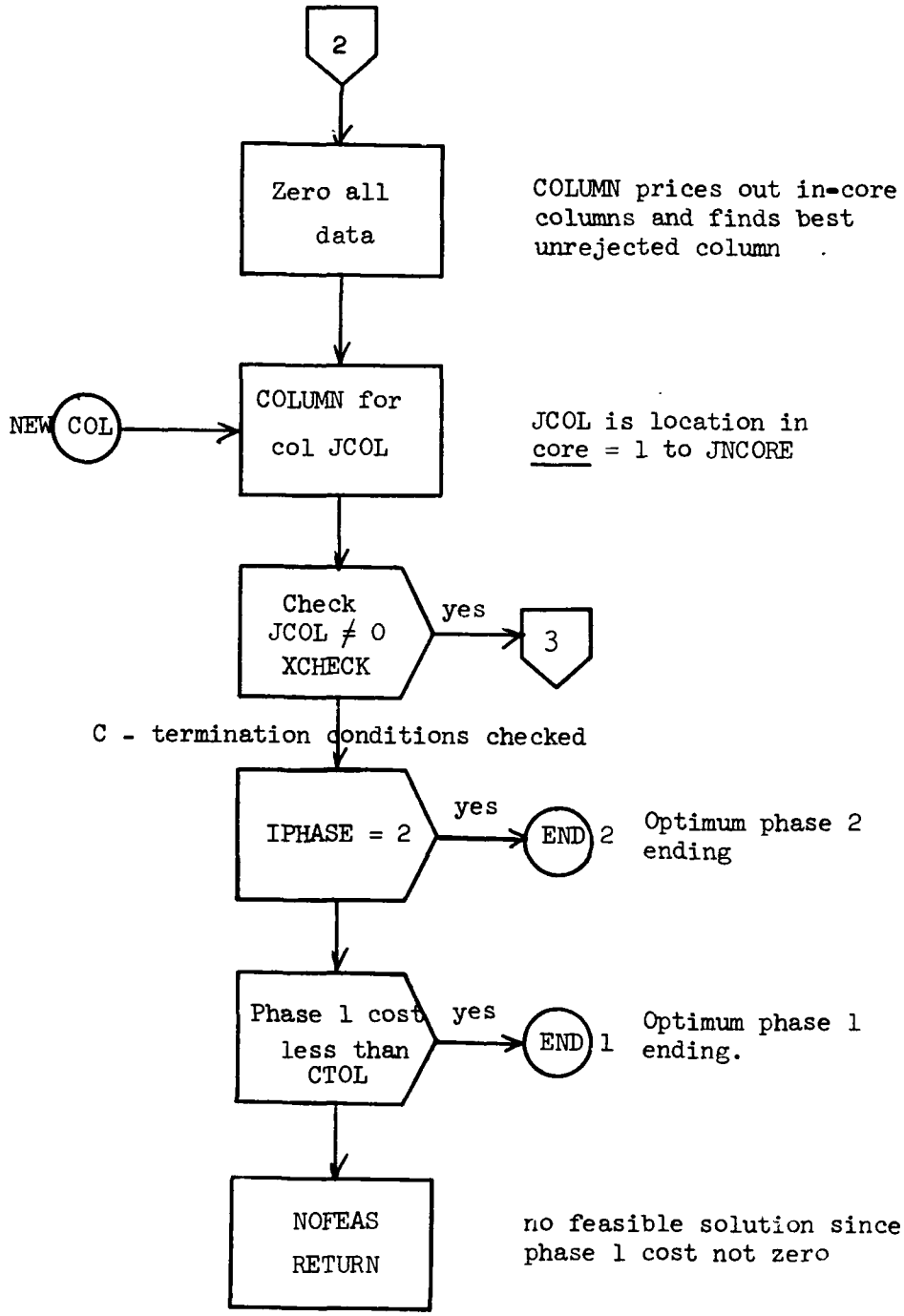
2
Zero all data
COLUMN prices out in-core columns and finds best unrejected column
NEW COL
COLUMN for col JCOL
JCOL is location in core = 1 to JNCORE
Check JCOL ≠ 0 XCHECK
yes
3
C - termination conditions checked
IPHASE = 2
yes
END 2
Optimum phase 2 ending
Phase 1 cost less than CTOL
yes
END 1
Optimum phase 1 ending.
NOFEAS RETURN
no feasible solution since phase 1 cost not zero

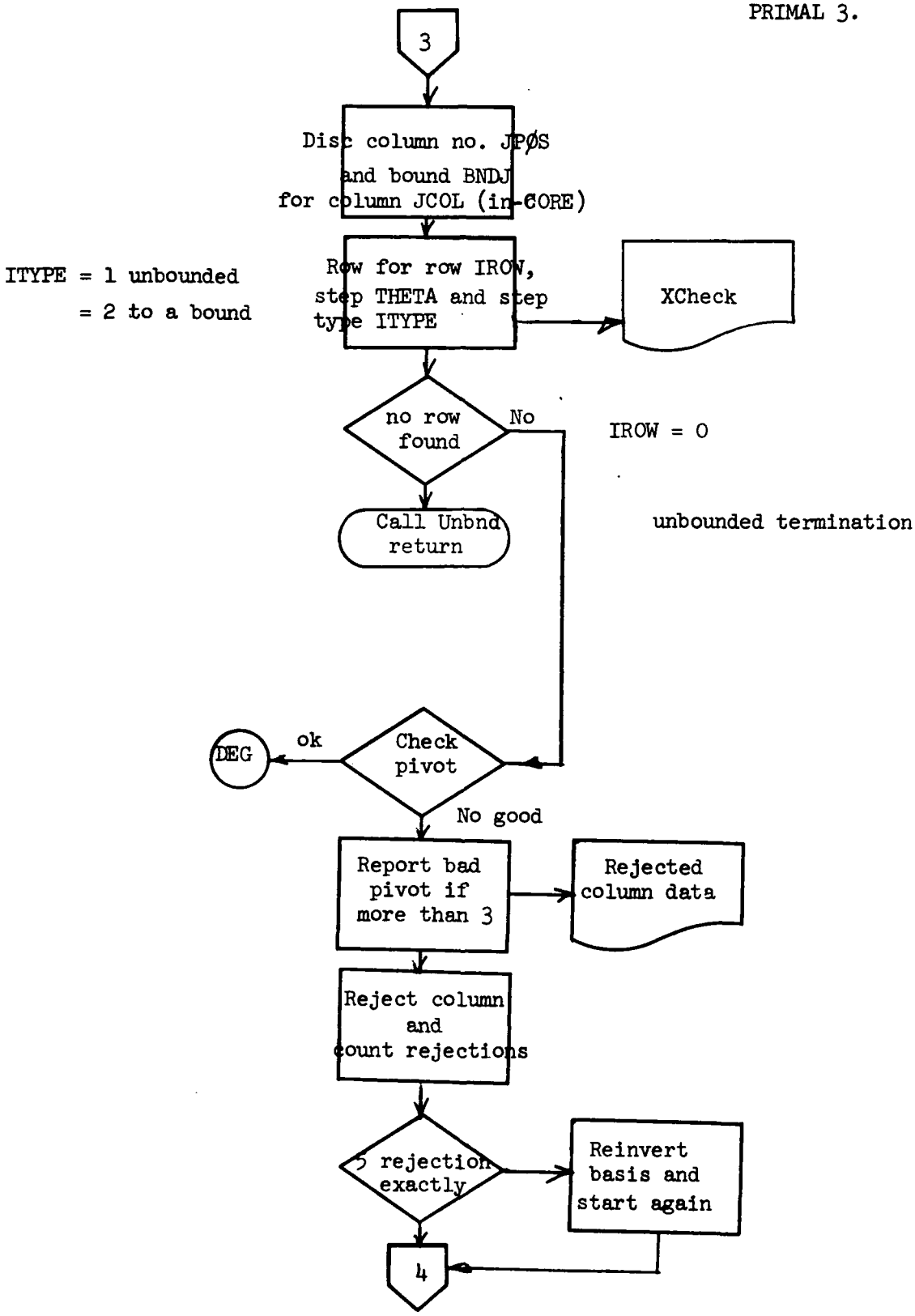
3
Disc column no. JPØS
and bound BNDJ
for column JCOL (in-CORE)
ITYPE = 1 unbounded
= 2 to a bound
Row for row IROW,
step THETA and step
type ITYPE
XCheck
no row
found
No
IROW = 0
Call Unbnd
return
unbounded termination
DEG
ok
Check
pivot
No good
Report bad
pivot if
more than 3
Rejected
column data
Reject column
and
count rejections
rejection
exactly
Reinvert
basis and
start again
4

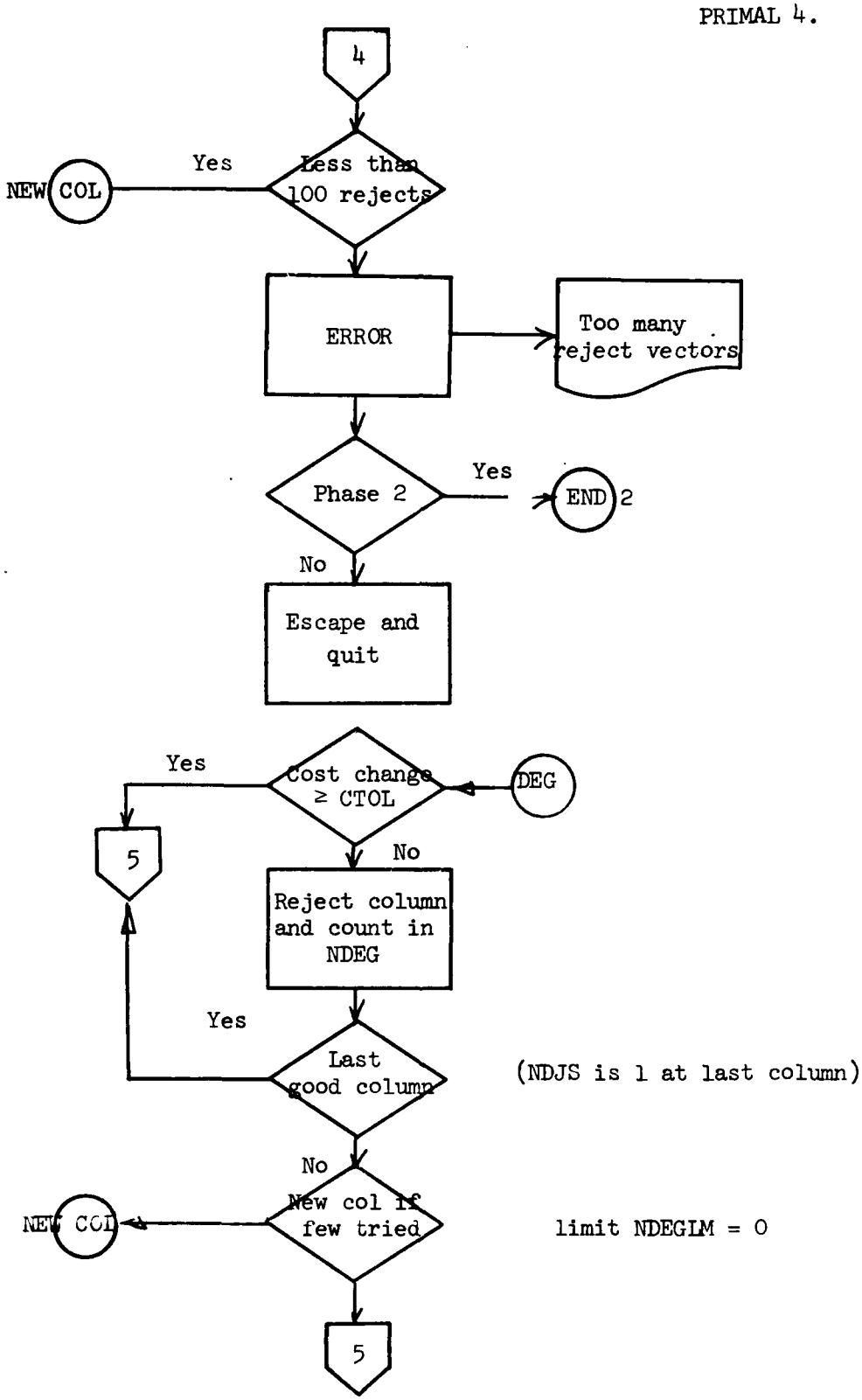
4
Less than 100 rejects
Yes
NEW COL
ERROR
Too many reject vectors
Phase 2
Yes
END 2
No
Escape and quit
Cost change ≥ CTOL
Yes
DEG
5
No
Reject column and count in NDEG
Yes
Last good column
(NDJS is 1 at last column)
No
New col if few tried
NEW COL
limit NDEGLM = 0
5

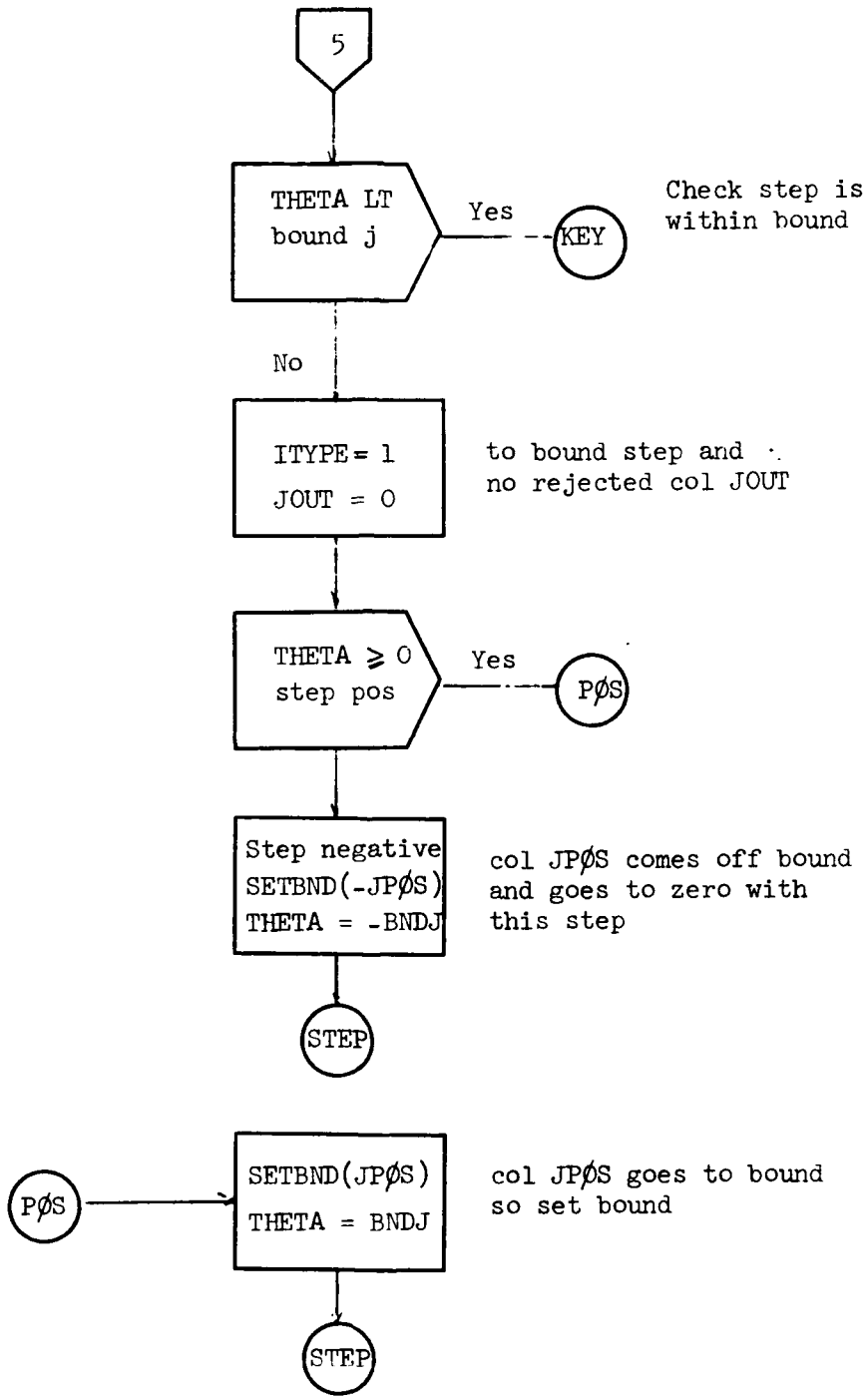
5
THETA LT bound j
Yes
KEY
Check step is within bound
No
ITYPE = 1
JOUT = 0
to bound step and no rejected col JOUT
THETA ≥ 0 step pos
Yes
PØS
Step negative
SETBND(-JPØS)
THETA = -BNDJ
col JPØS comes off bound and goes to zero with this step
STEP
PØS
SETBND(JPØS)
THETA = BNDJ
col JPØS goes to bound so set bound
STEP

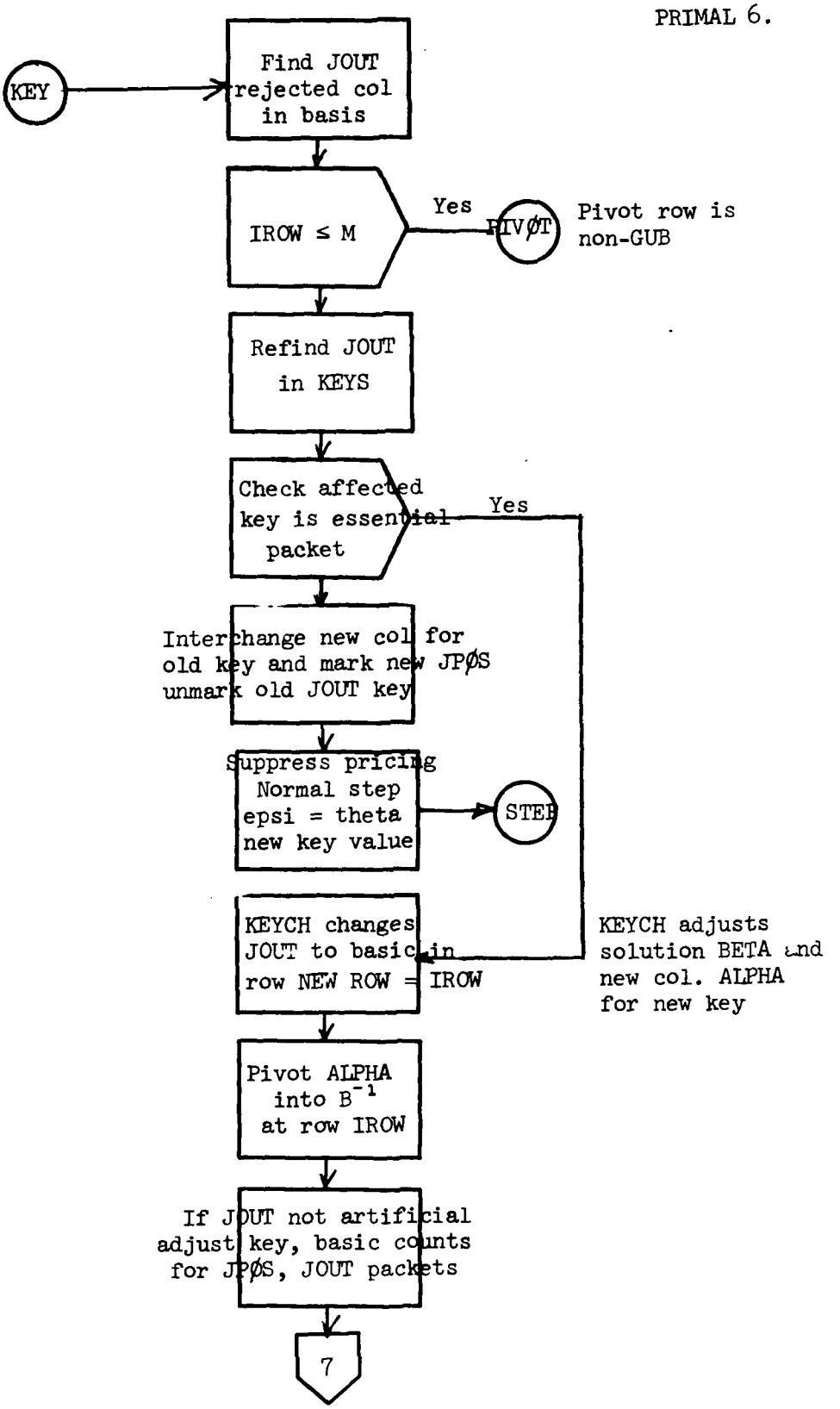
KEY
Find JOUT rejected col in basis
IROW ≤ M
Yes
PIVØT
Pivot row is non-GUB
Refind JOUT in KEYS
Check affected key is essential packet
Yes
Interchange new col for old key and mark new JPØS unmark old JOUT key
Suppress pricing Normal step epsi = theta new key value
STEP
KEYCH changes JOUT to basic in row NEW ROW = IROW
KEYCH adjusts solution BETA and new col. ALPHA for new key
Pivot ALPHA into B⁻¹ at row IROW
If JOUT not artificial adjust key, basic counts for JPØS, JOUT packets
7

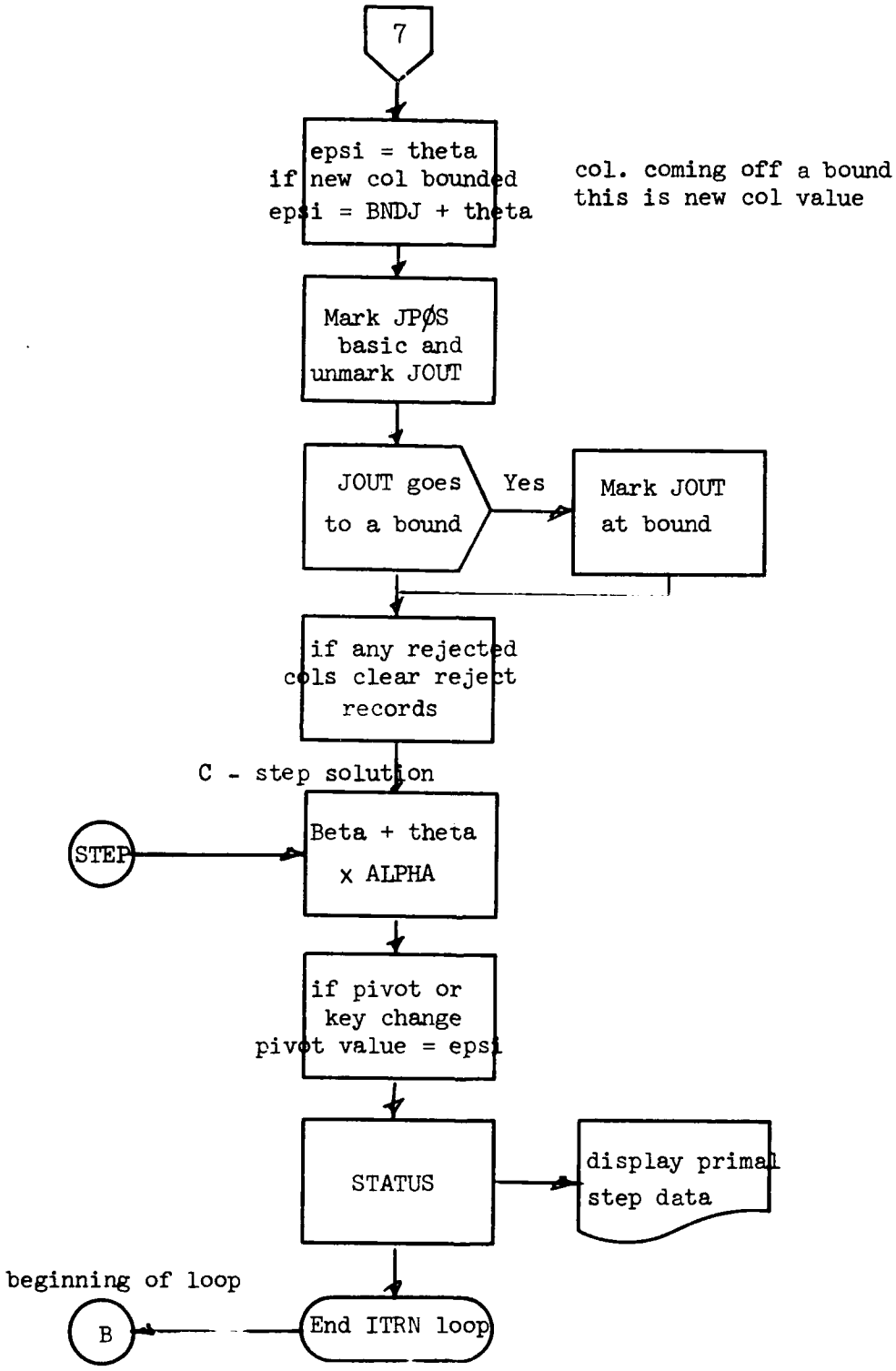
7
epsi = theta
if new col bounded
epsi = BNDJ + theta
col. coming off a bound
this is new col value
Mark JPØS
basic and
unmark JOUT
JOUT goes
to a bound
Yes
Mark JOUT
at bound
if any rejected
cols clear reject
records
C - step solution
STEP
Beta + theta
x ALPHA
if pivot or
key change
pivot value = epsi
STATUS
display primal
step data
beginning of loop
B
End ITRN loop

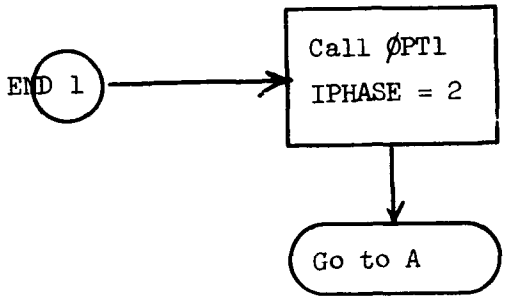

end of phase 1, ØPT1 displays STATUS

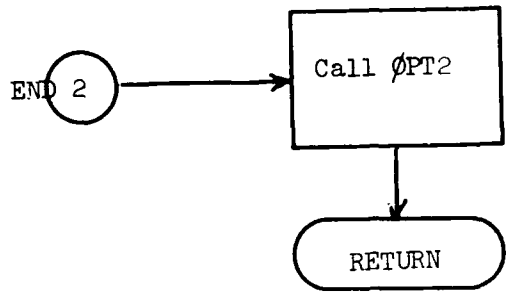

end of phase 2, ØPT2 displays STATUS

to LP with solution

Subroutine STATUS

STATUS prints BRIMAL data

STATUS 1.

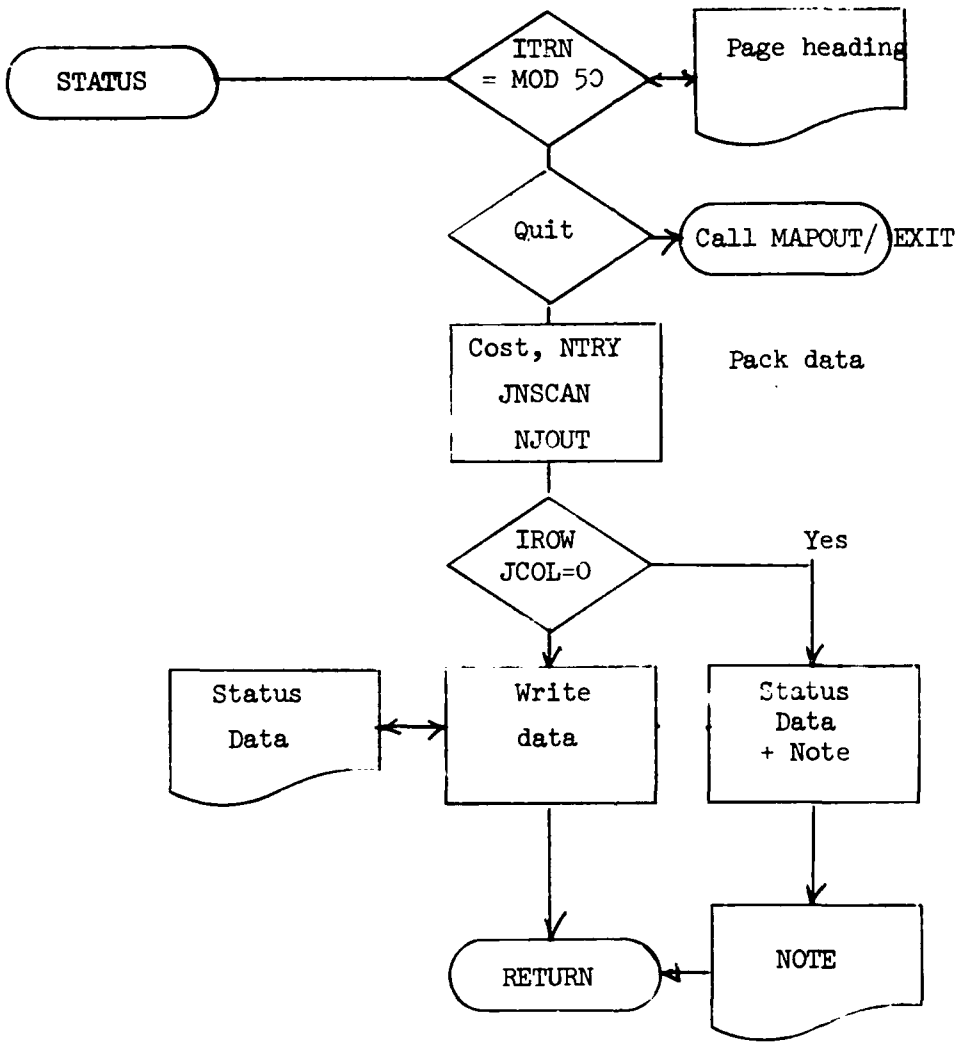

ERRØR - triple prints error messages

MESSG } single print error messages and print time in seconds since
MSSG } start of run.

Subroutine ROW

ROW computes curren' ·epresentation of selected column JCOL in core ALPHA then finds step MAX THETA which preserves feasibility.

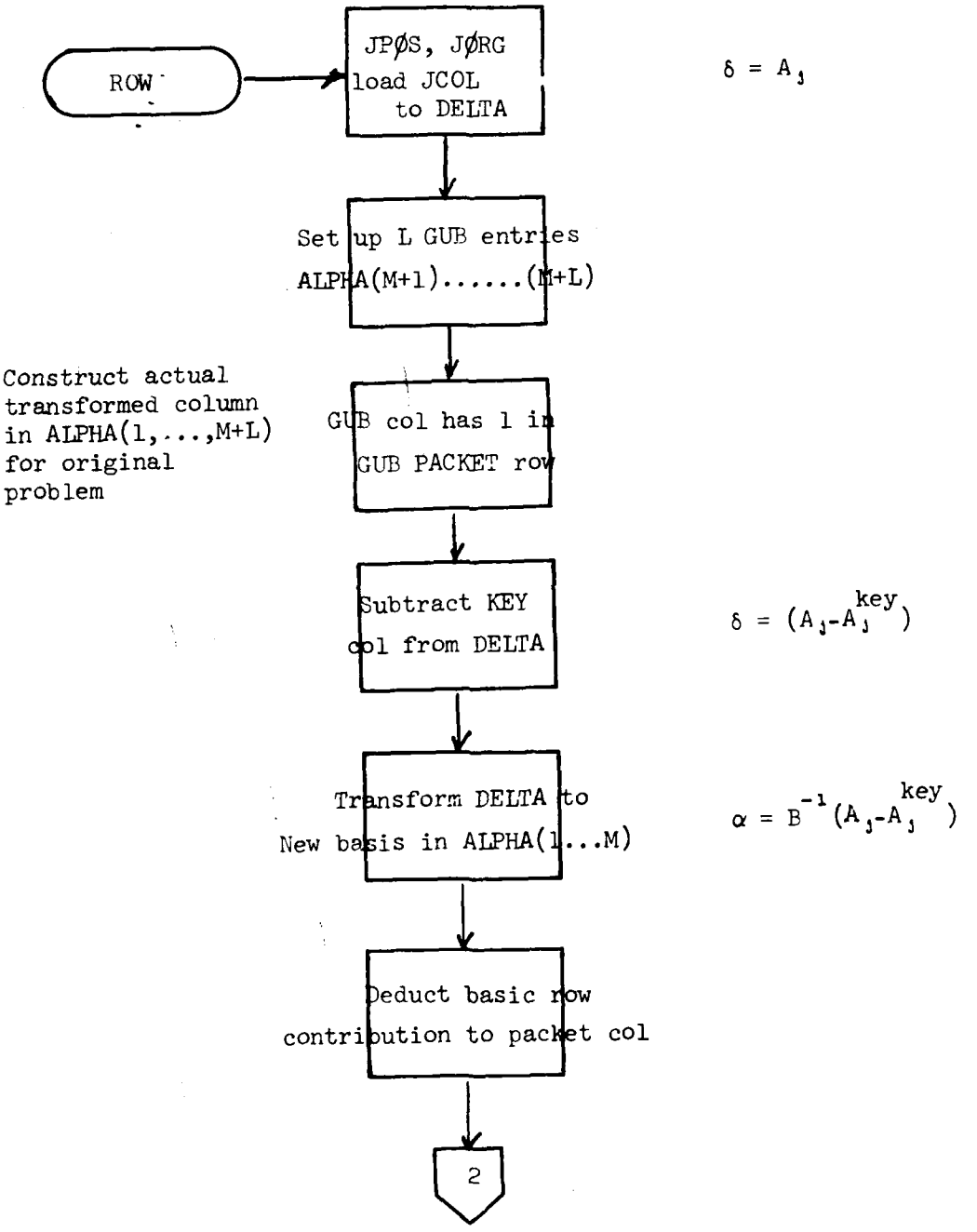

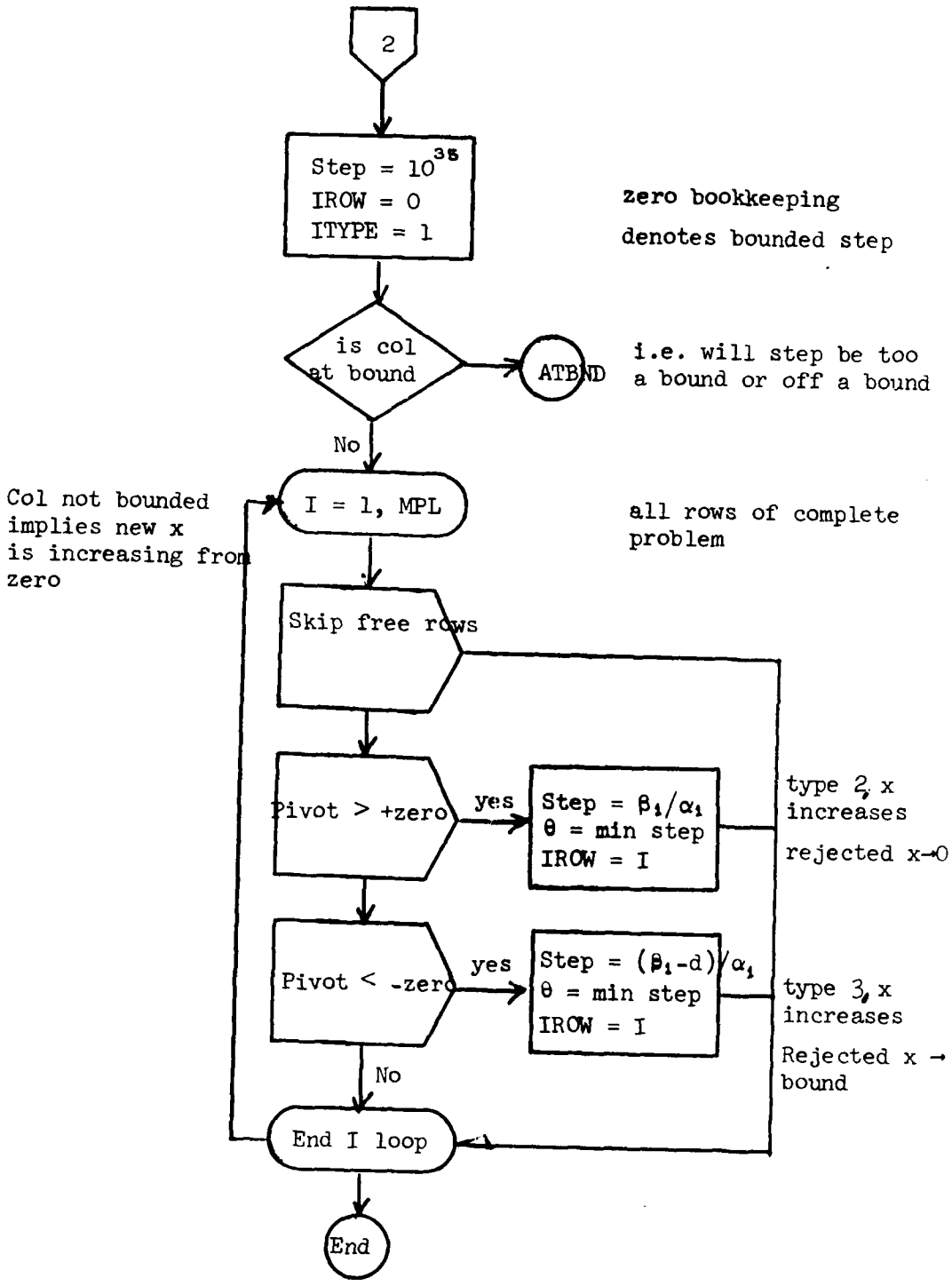
2
Step = 10^{35}
IROW = 0
ITYPE = 1
zero bookkeeping
denotes bounded step
is col at bound
ATBND
i.e. will step be too a bound or off a bound
No
Col not bounded implies new x is increasing from zero
I = 1, MPL
all rows of complete problem
Skip free rows
Pivot > +zero
yes
Step = β_i/α_i
θ = min step
IROW = I
type 2, x increases
rejected x→0
Pivot < -zero
yes
Step = $(\beta_i - d)/\alpha_i$
θ = min step
IROW = I
type 3, x increases
Rejected x → bound
No
End I loop
End

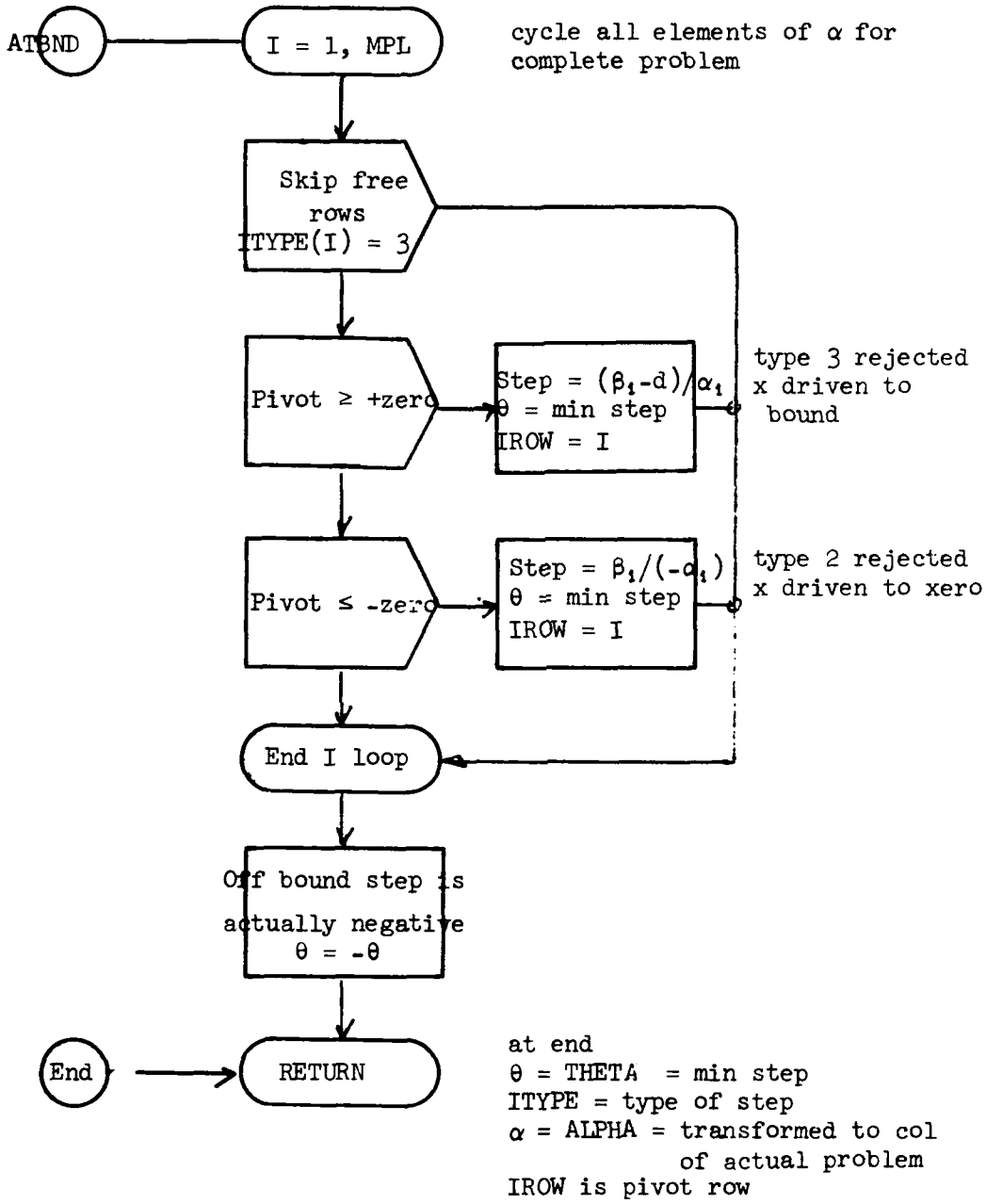

N.B. IROW ≤ M ⟹ pivot non-GUB row
> M ⟹ pivot on GUB row

Subroutine COLUMN

COLUMN selects a column JCOL from among vectors in core in AJ space. If no columns price out, it calls CHECK to search disc for replenishment.

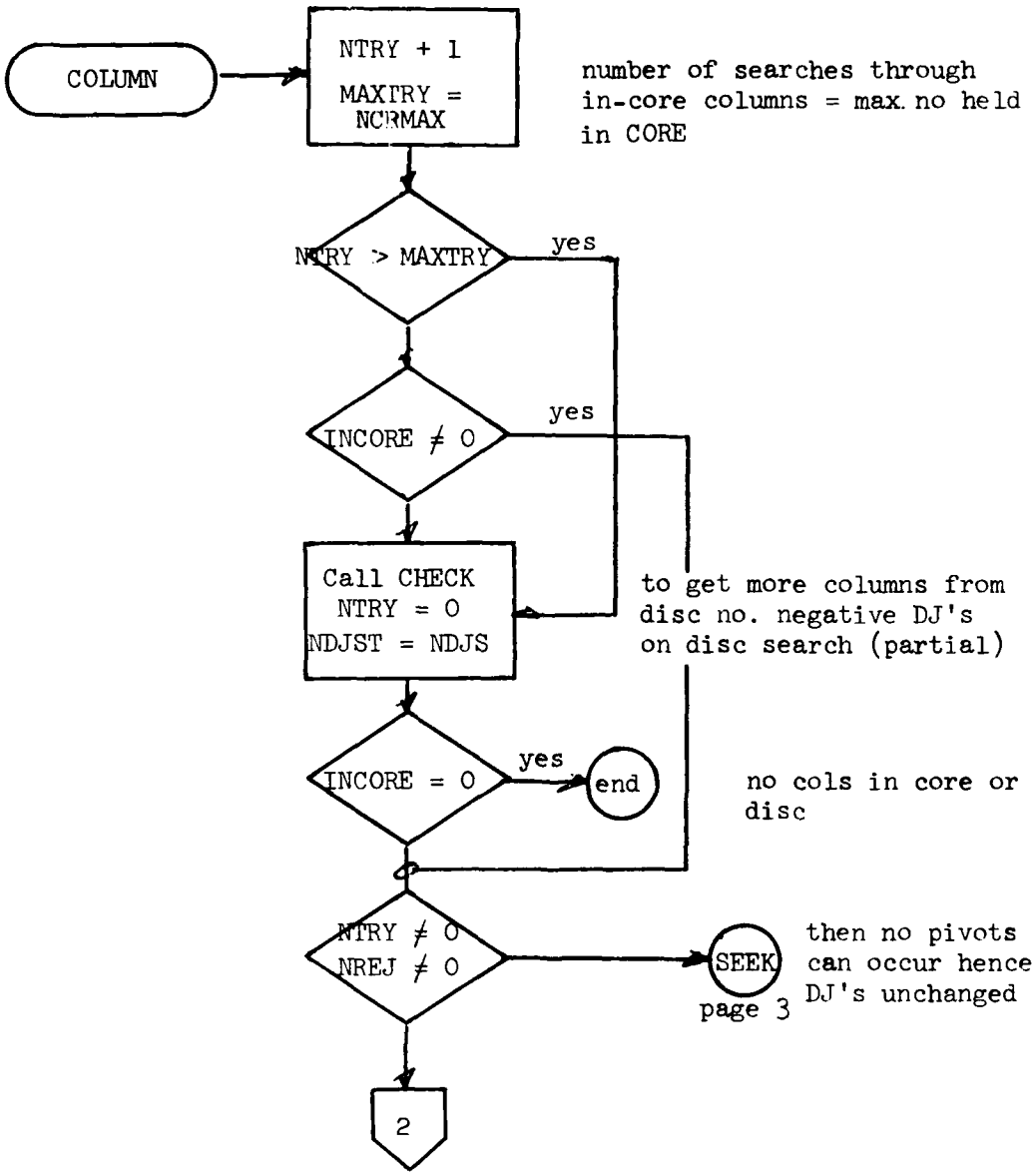

COLUMN 2.

Reprices old columns in core unless the prices obviously haven't changed (same β^{-1}).

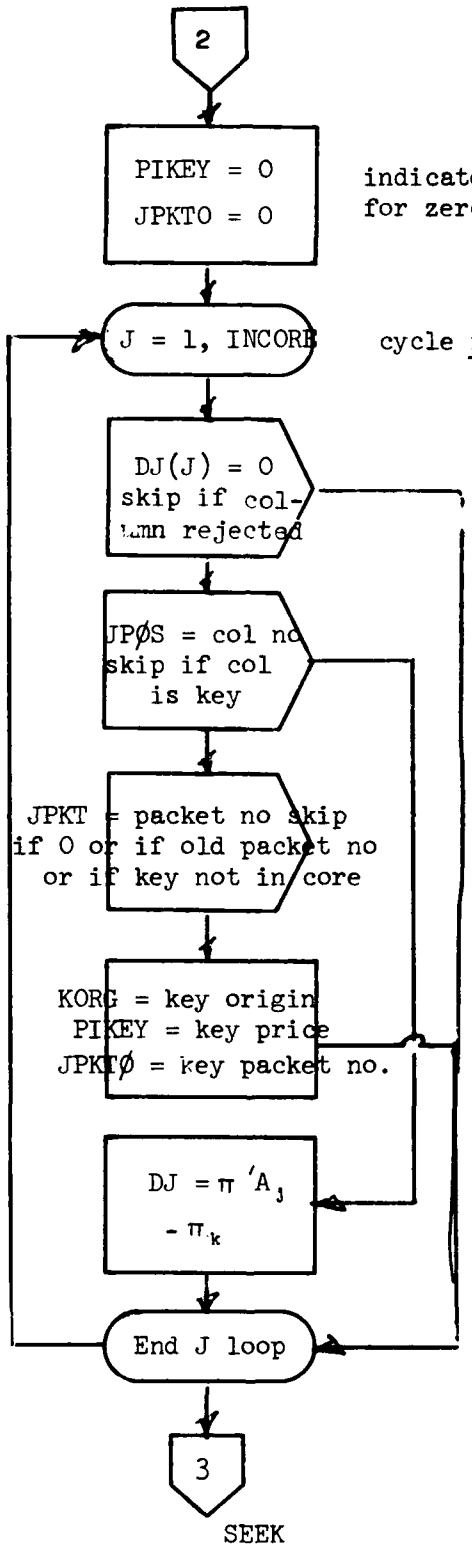

COLUMN 3.

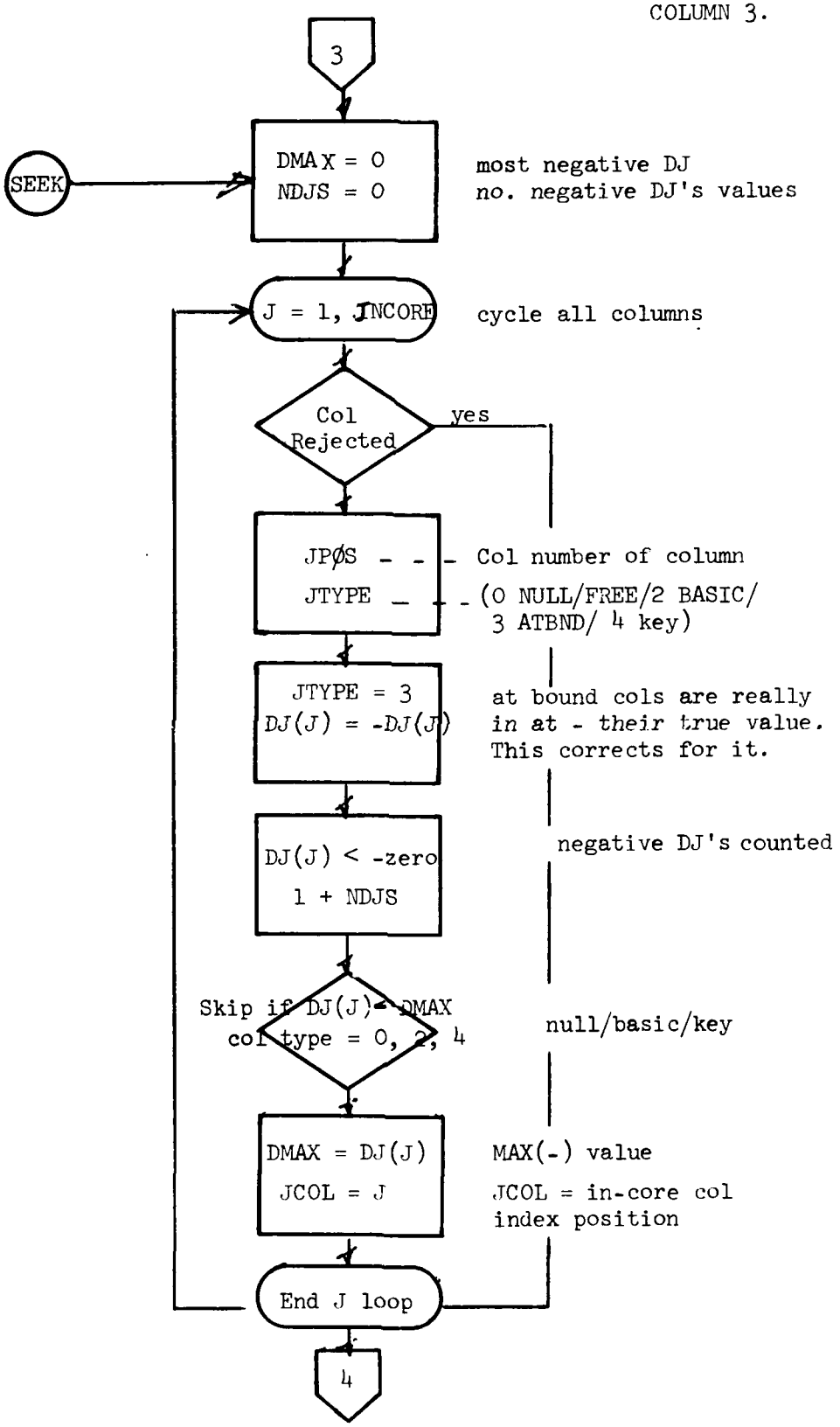
3
SEEK
DMAX = 0
NDJS = 0
most negative DJ
no. negative DJ's values
J = 1, JNCORE
cycle all columns
Col Rejected
yes
JPØS
JTYPE
Col number of column
(0 NULL/FREE/2 BASIC/
3 ATBND/ 4 key)
JTYPE = 3
DJ(J) = -DJ(J)
at bound cols are really
in at - their true value.
This corrects for it.
DJ(J) < -zero
1 + NDJS
negative DJ's counted
Skip if DJ(J) < DMAX
col type = 0, 2, 4
null/basic/key
DMAX = DJ(J)
JCOL = J
MAX(-) value
JCOL = in-core col
index position
End J loop
4

COLUMN 4.

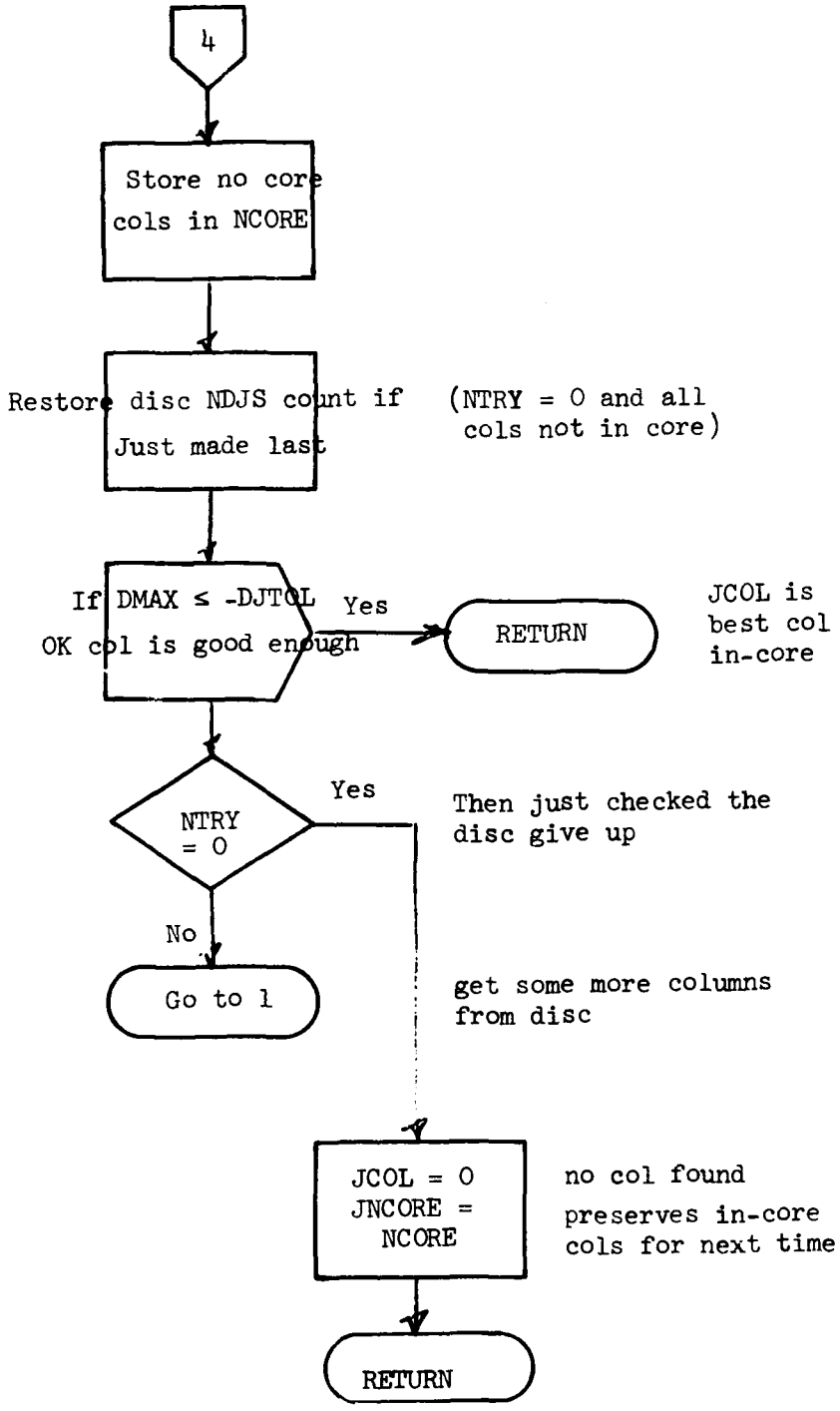
4
Store no core cols in NCORE
Restore disc NDJS count if Just made last
(NTRY = 0 and all cols not in core)
If DMAX ≤ -DJTOL OK col is good enough
Yes
RETURN
JCOL is best col in-core
NTRY = 0
Yes
Then just checked the disc give up
No
Go to 1
get some more columns from disc
JCOL = 0
JNCORE = NCORE
no col found
preserves in-core cols for next time
RETURN

Subroutine DISC

DISC 1

Checks if an inverse is necessary and then checks the DISC files IA1, IA2 for more useful columns using IN and INPCKD.

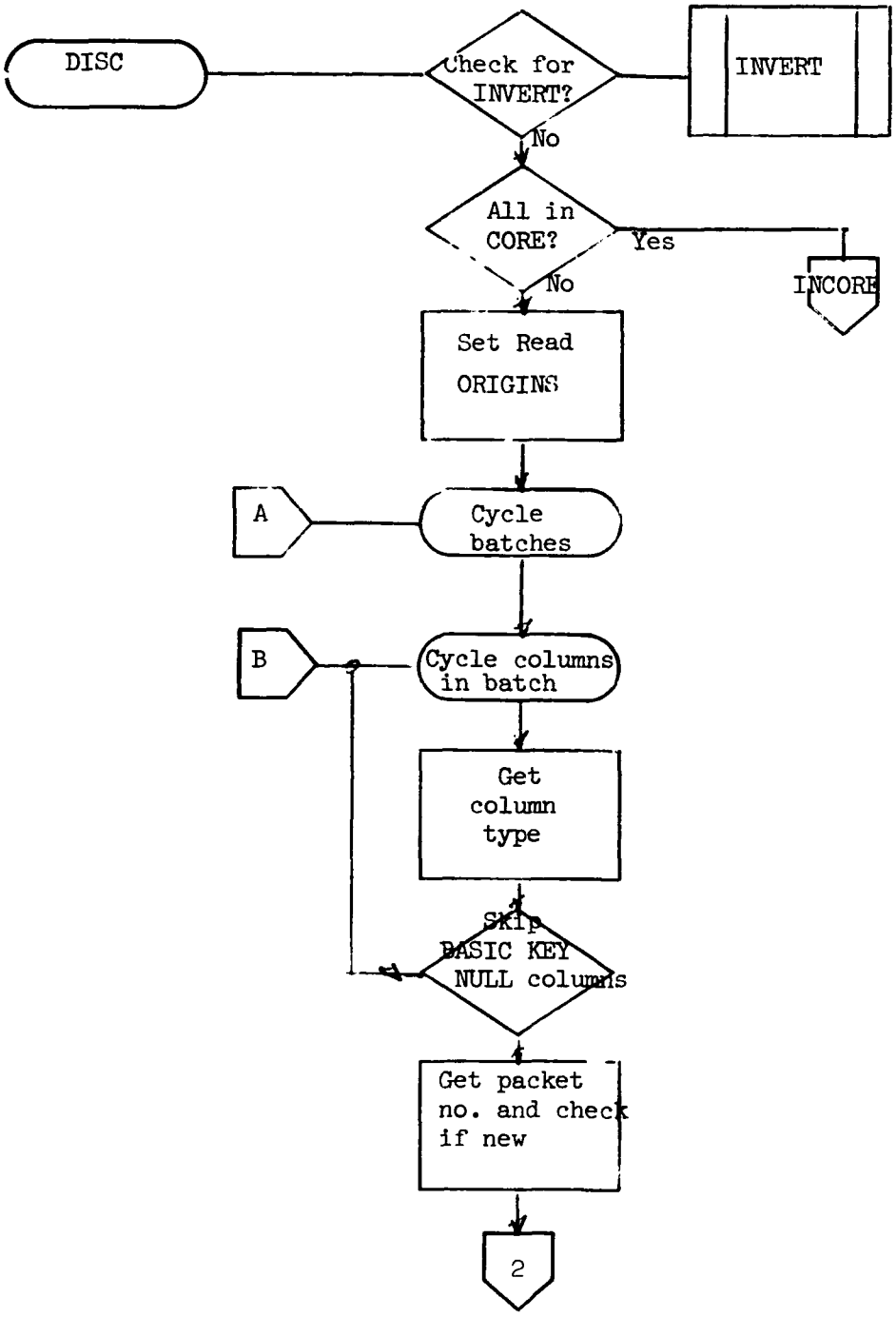

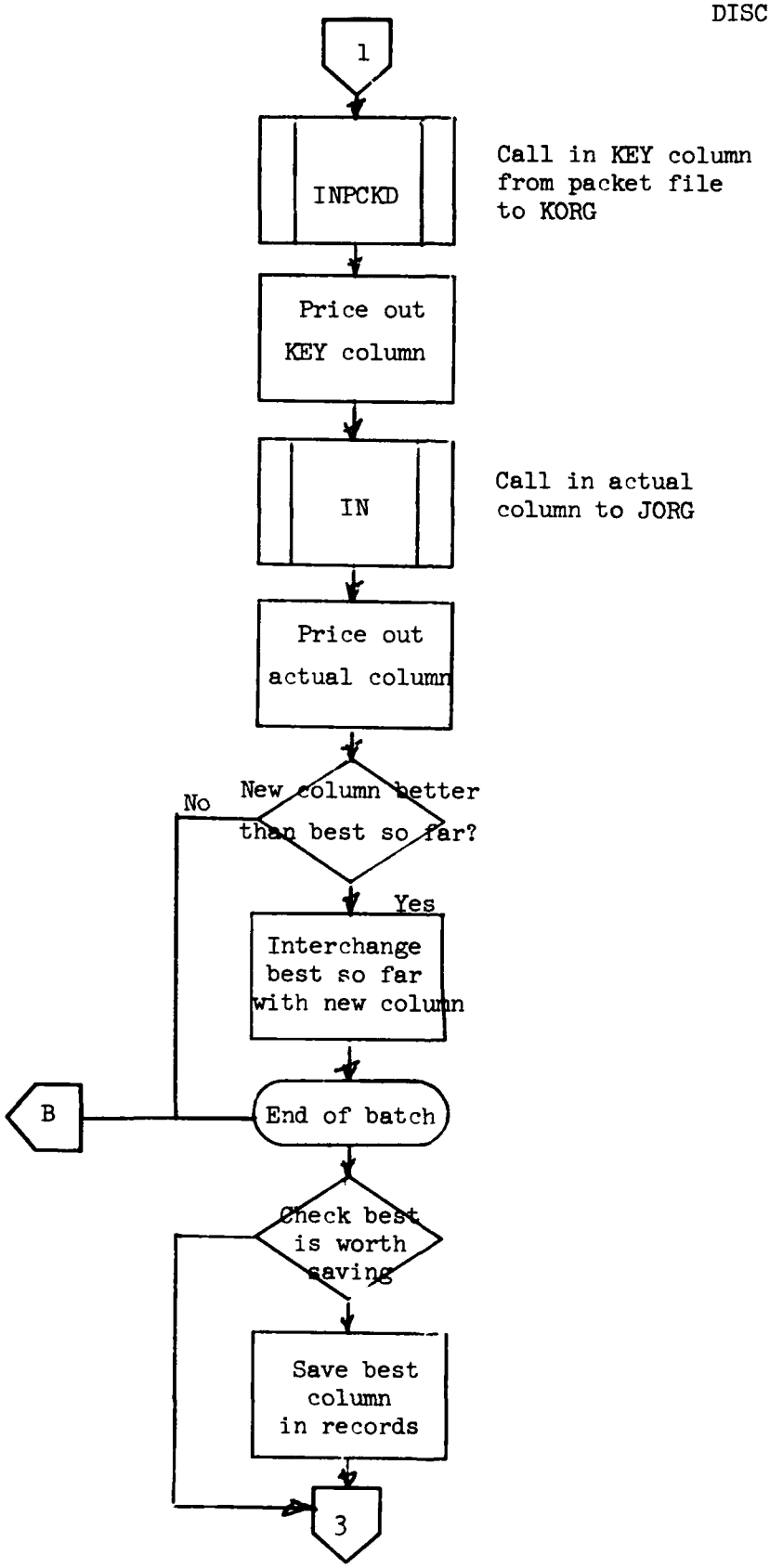
1
INPCKD
Call in KEY column from packet file to KORG
Price out KEY column
IN
Call in actual column to JORG
Price out actual column
New column better than best so far?
No
Yes
Interchange best so far with new column
B
End of batch
Check best is worth saving
Save best column in records
3

DISC 3

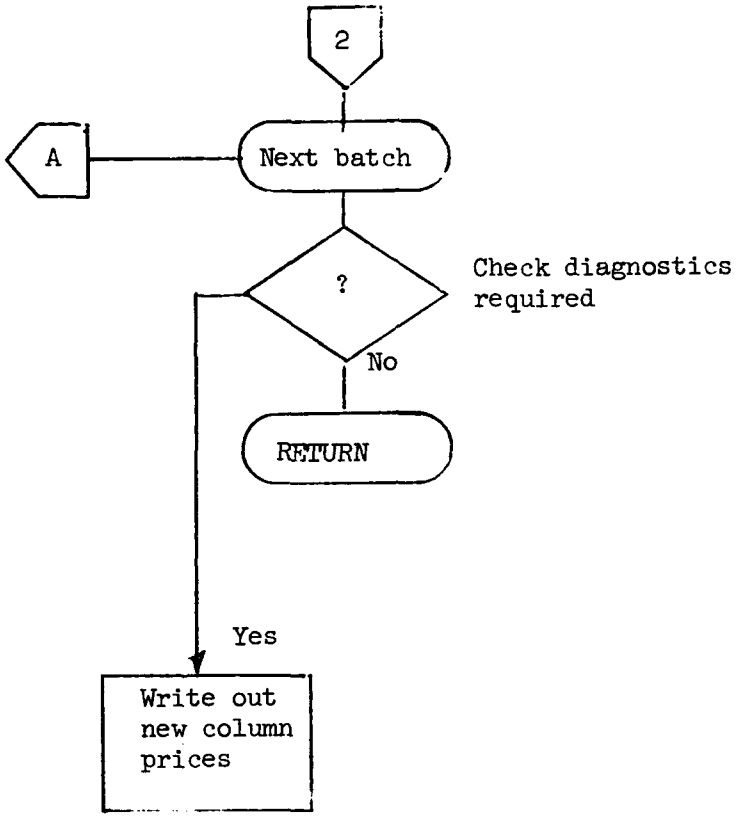
2
A
Next batch
?
Check diagnostics required
No
RETURN
Yes
Write out new column prices

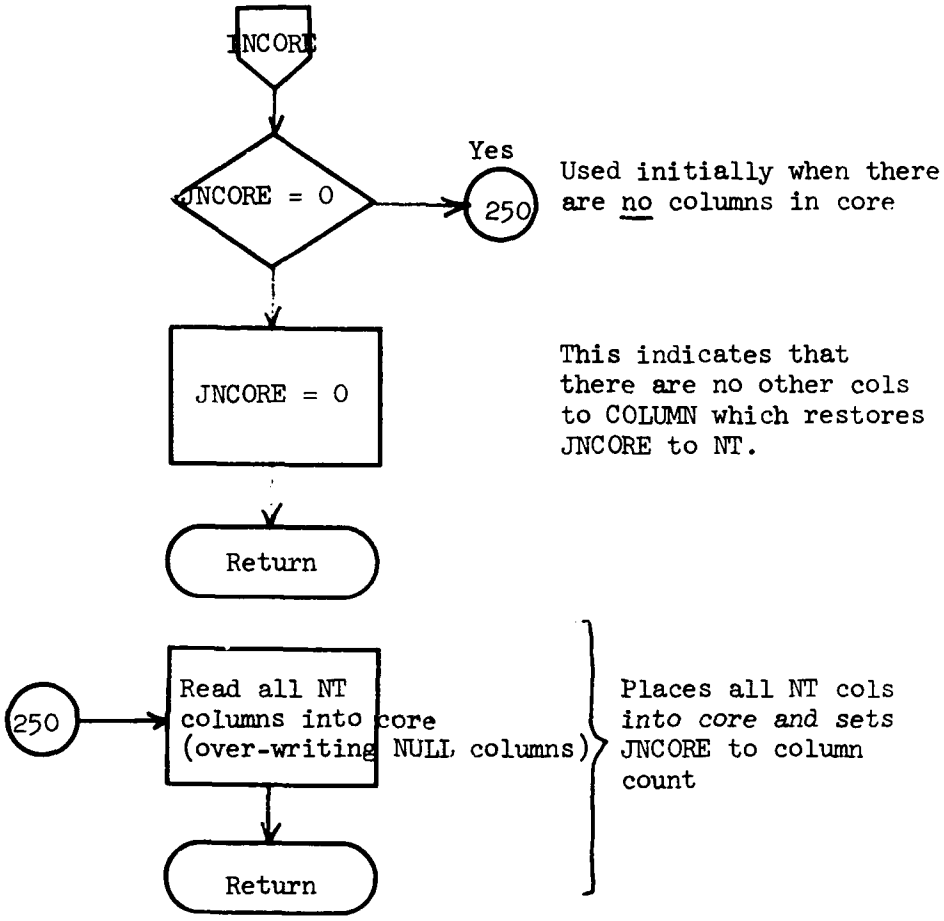

N.B. Once the columns are read into core, they stay there because COLUMN always restores JNCORE to NT and keeps track of them at the end of each phase.

INSERT used by CHECK to order columns selected in the batch. It keeps track of worst column stored of the batch and over writes it if a better one is offered.

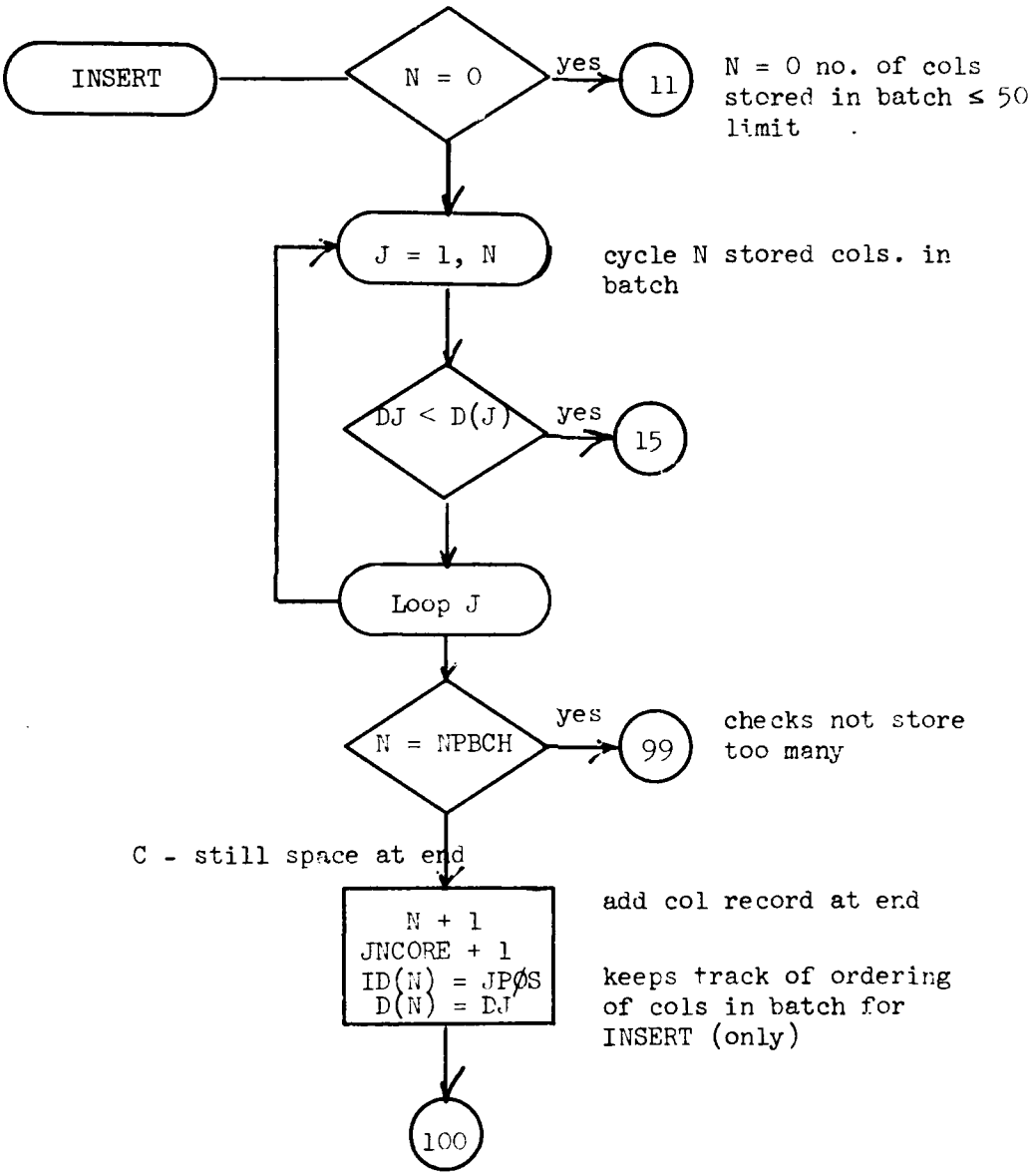

INSERT 2.

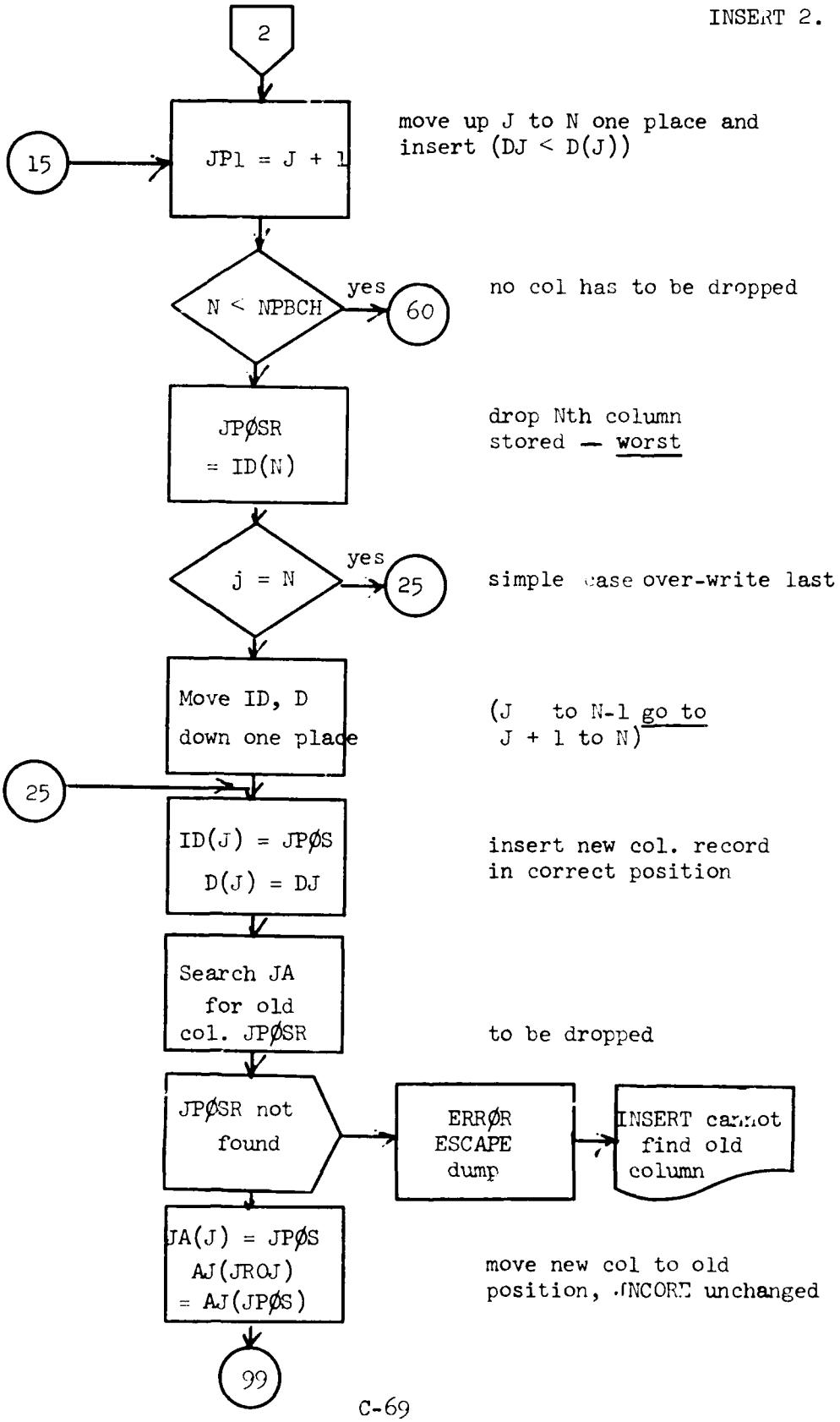
2
15
JP1 = J + 1
move up J to N one place and insert (DJ < D(J))
N < NPBCH
yes
60
no col has to be dropped
JPØSR = ID(N)
drop Nth column stored — worst
j = N
yes
25
simple case over-write last
Move ID, D down one place
(J to N-1 go to J + 1 to N)
25
ID(J) = JPØS
D(J) = DJ
insert new col. record in correct position
Search JA for old col. JPØSR
to be dropped
JPØSR not found
ERRØR ESCAPE dump
INSERT cannot find old column
JA(J) = JPØS
AJ(JROJ) = AJ(JPØS)
move new col to old position, JNCORE unchanged
99

INSERT 3.

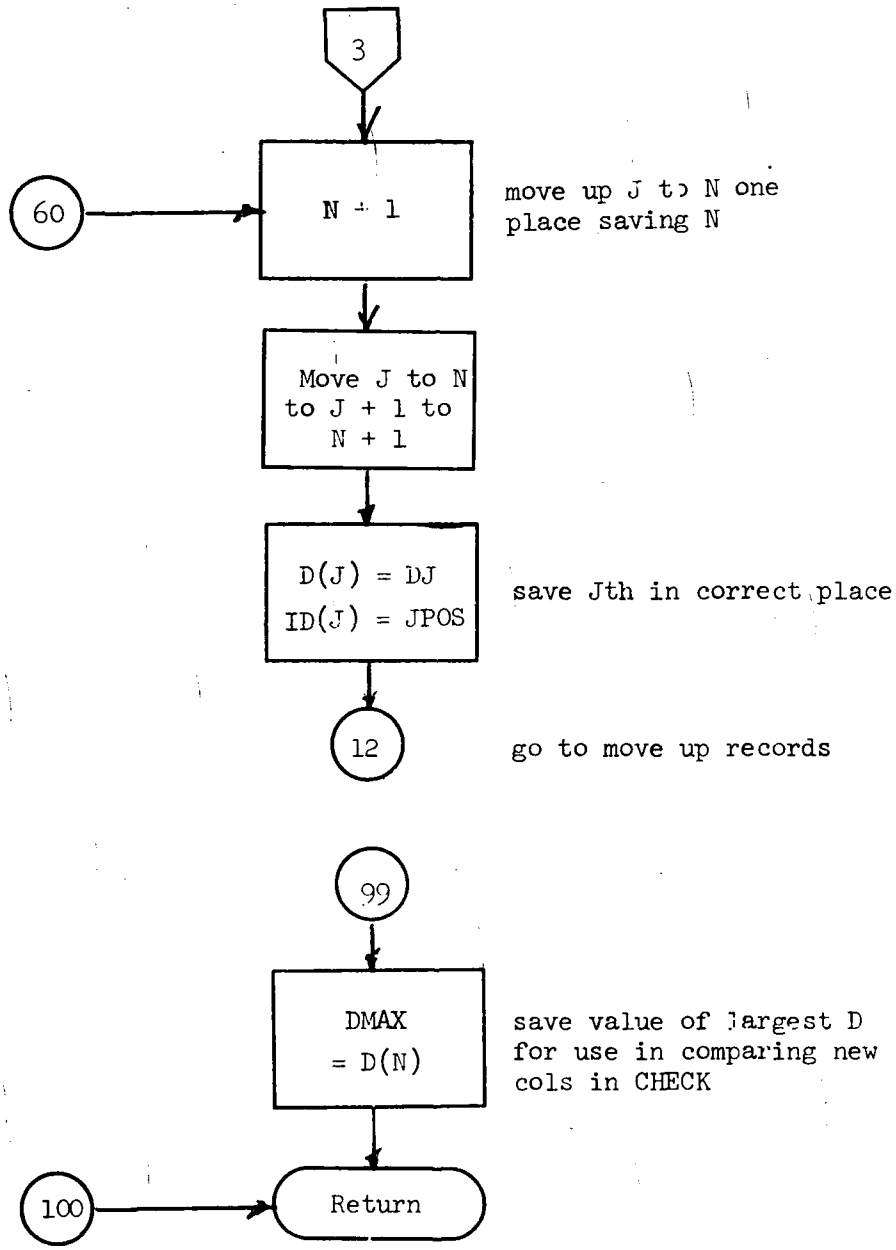
3
60
N + 1
move up J to N one place saving N
Move J to N to J + 1 to N + 1
D(J) = DJ
ID(J) = JPOS
save Jth in correct place
12
go to move up records
99
DMAX = D(N)
save value of largest D for use in comparing new cols in CHECK
100
Return

KEYCH changes key to make JCOL basic in some row IROW found, making old col key, and corrects α, β and B^{-1}.

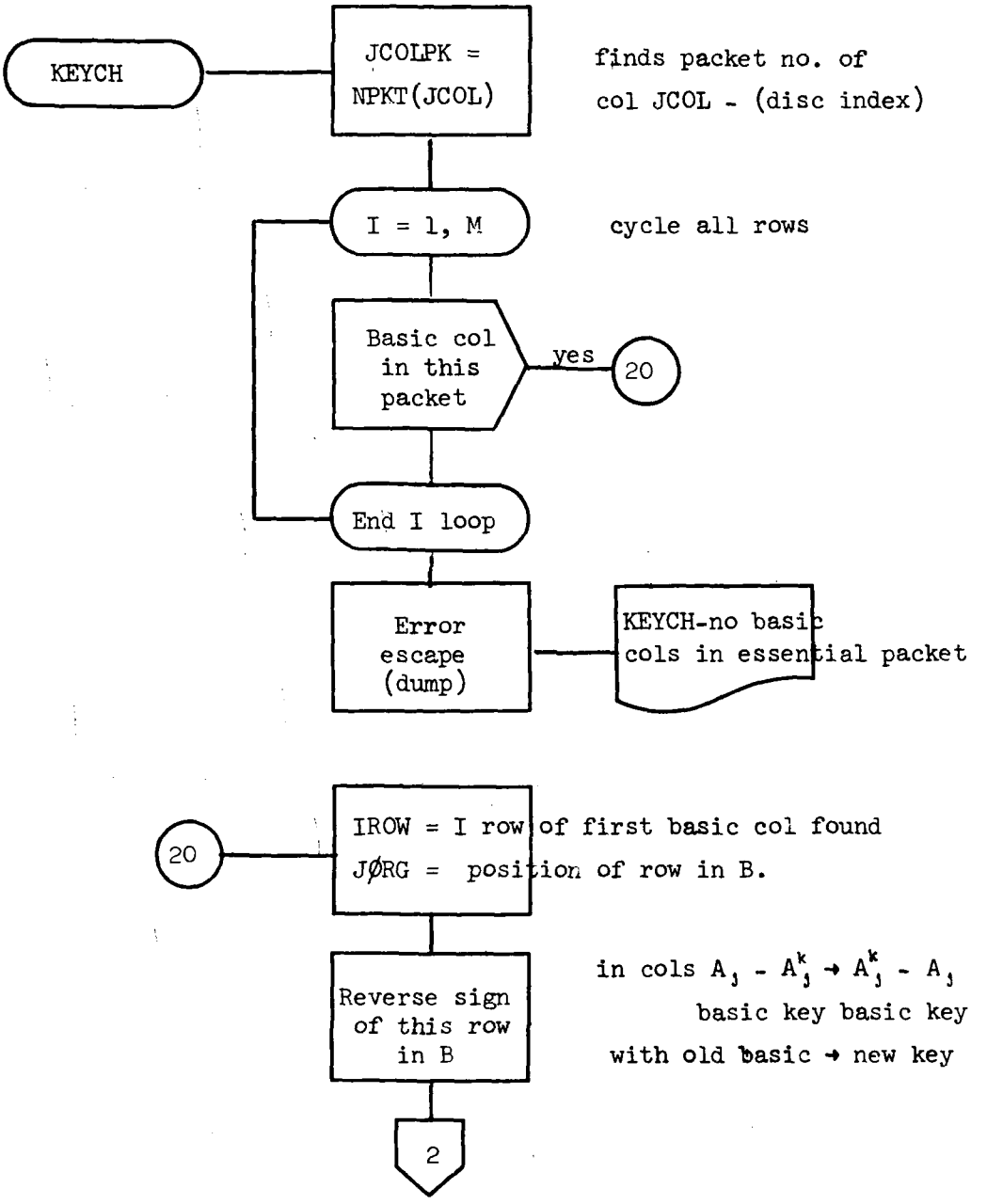

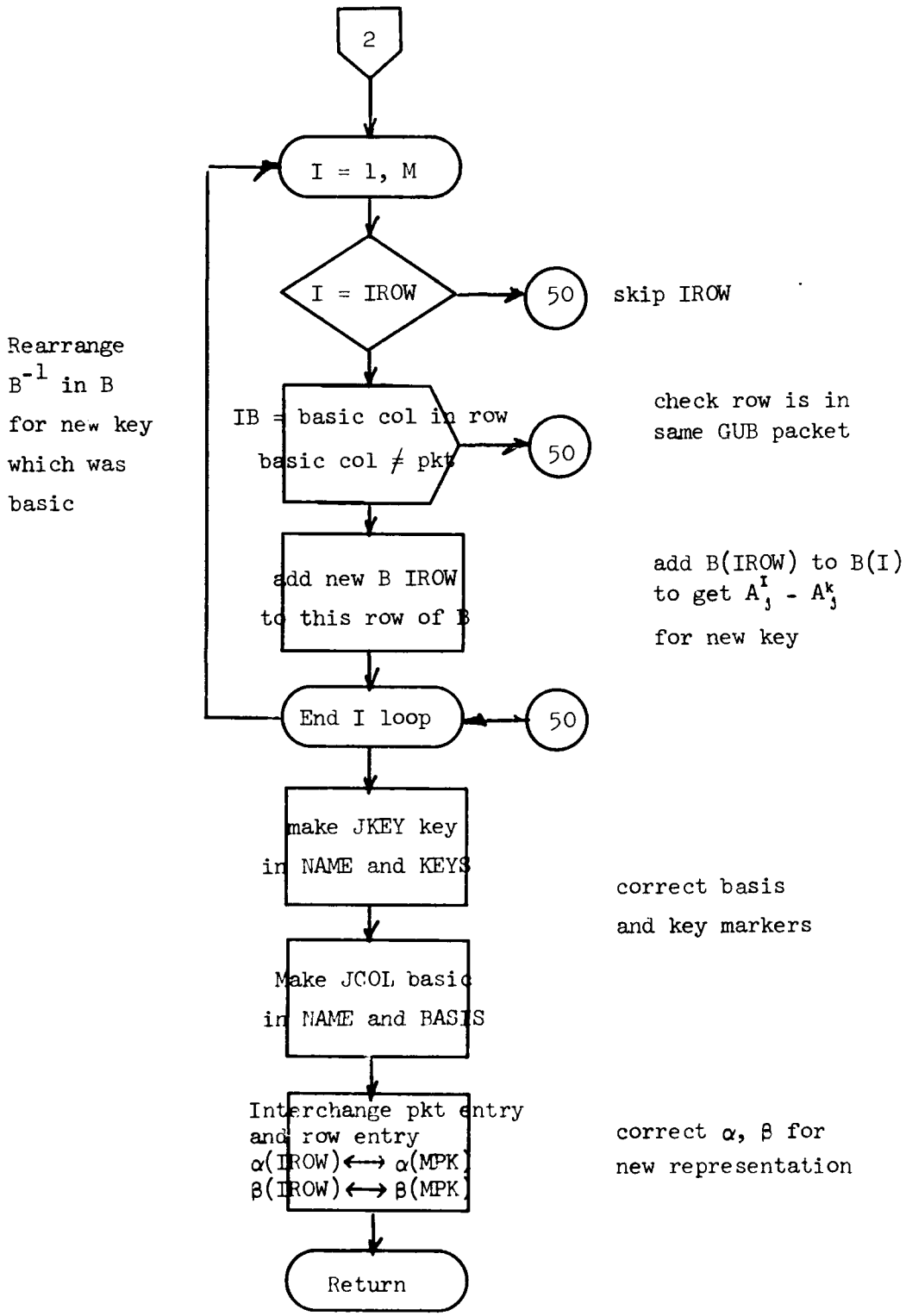
2
I = 1, M
I = IROW
50
skip IROW
Rearrange B^{-1} in B for new key which was basic
IB = basic col in row
basic col ≠ pkt
50
check row is in same GUB packet
add new B IROW to this row of B
add B(IROW) to B(I) to get $A^I_j - A^k_j$ for new key
End I loop
50
make JKEY key in NAME and KEYS
correct basis and key markers
Make JCOL basic in NAME and BASIS
Interchange pkt entry and row entry
α(IROW) ⟷ α(MPK)
β(IROW) ⟷ β(MPK)
correct α, β for new representation
Return

PIVOT inserts current representation of column ALPHA into basic inverse B at IROW, if IROW = 0 it finds a slot for ALPHA or rejects it.

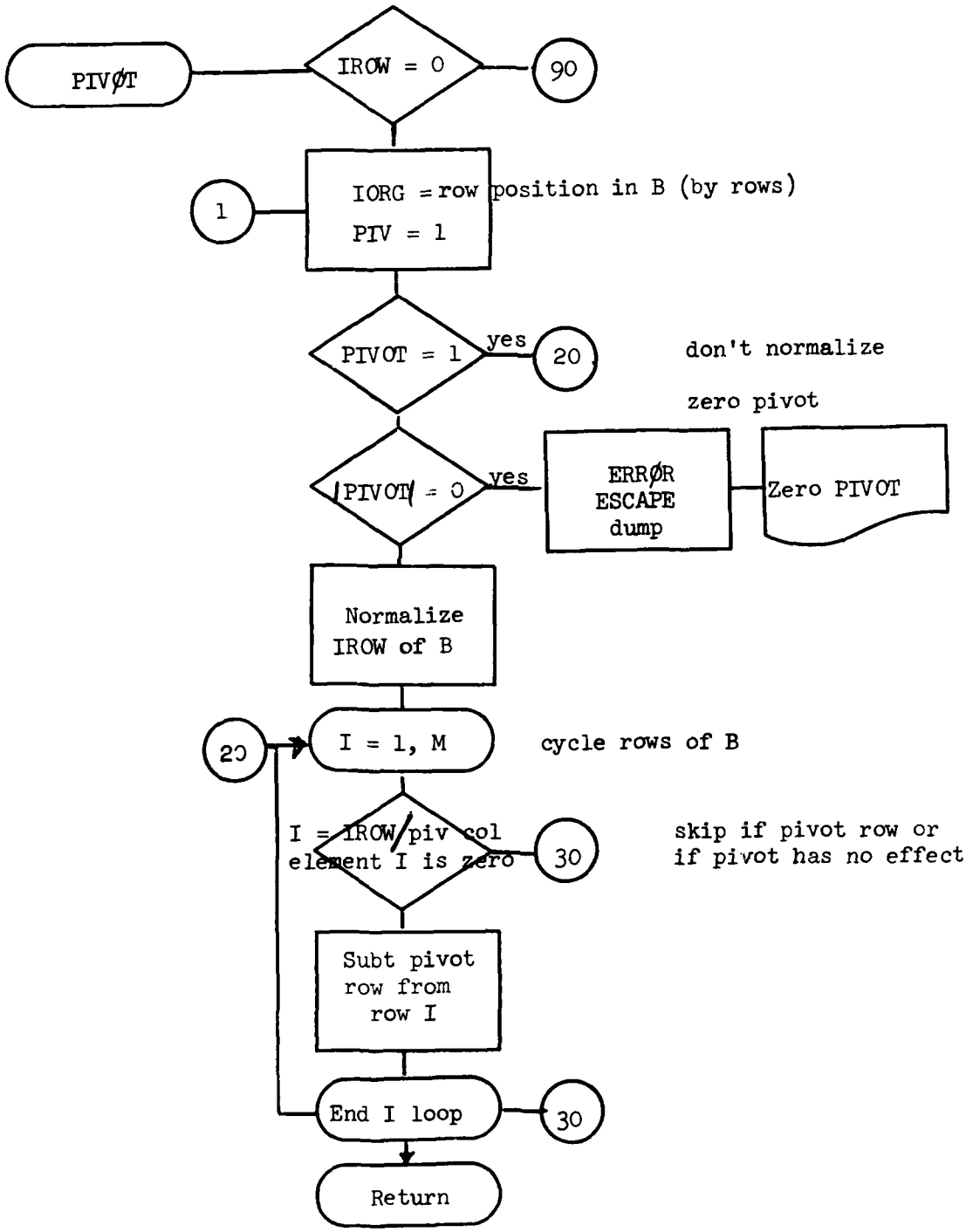

Find best row for ALPHA called from INVERT when row not known.

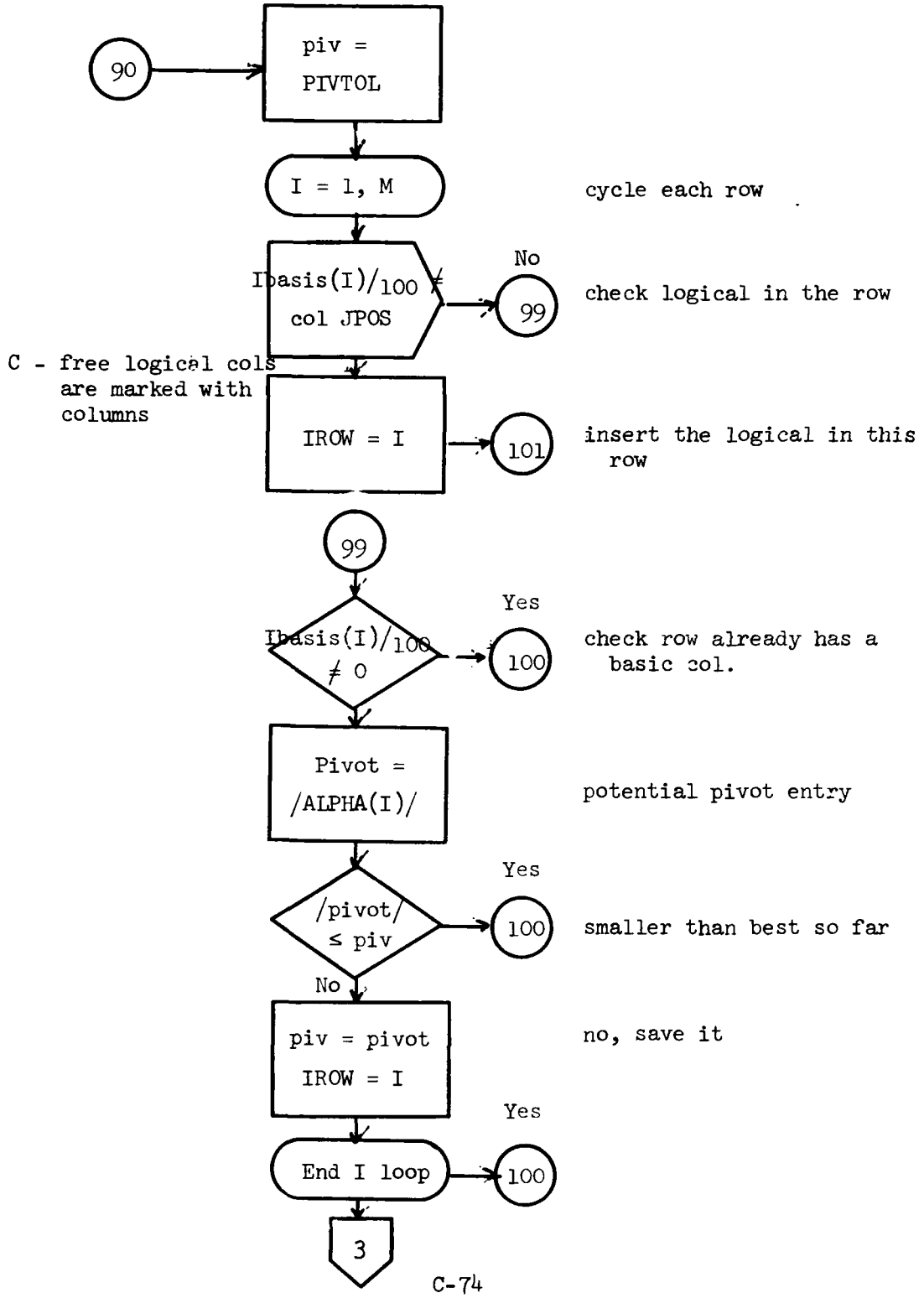

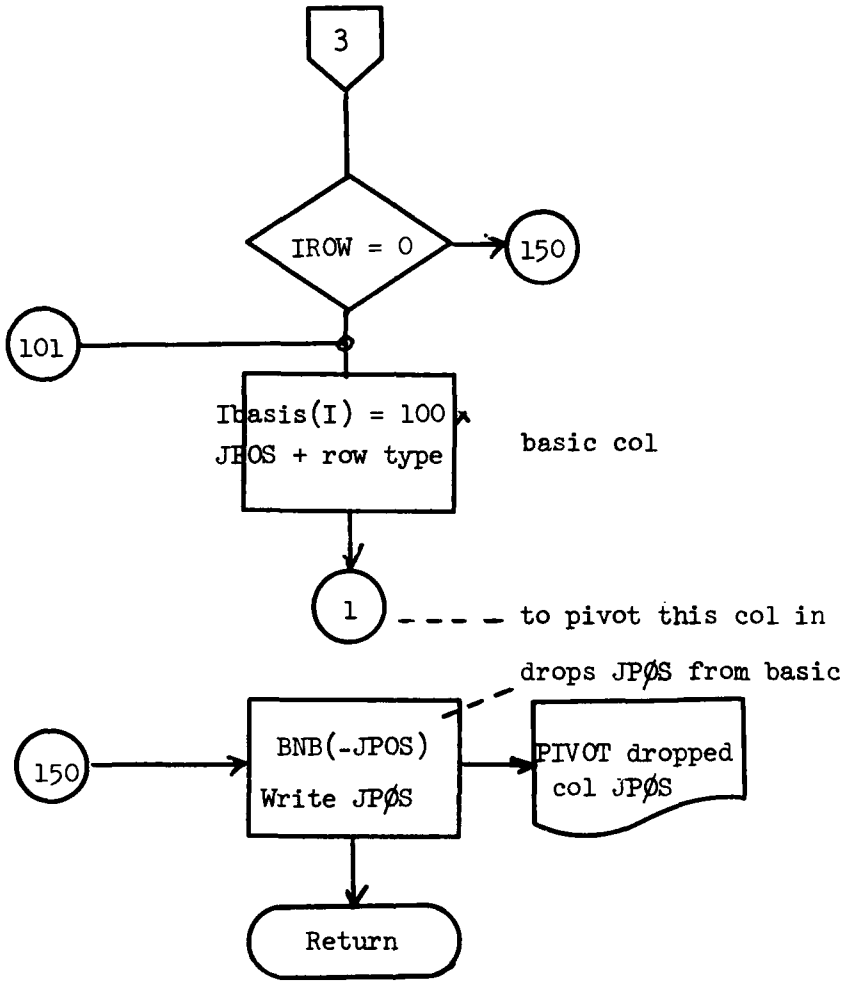
3
IROW = 0
150
101
Ibasis(I) = 100
JPOS + row type
basic col
1
to pivot this col in
drops JPØS from basic
150
BNB(-JPOS)
Write JPØS
PIVOT dropped
col JPØS
Return

SETBND, SETBNB, SETKEY, SETNNN all set or unset to state of a variable to bound/basic/key/null.

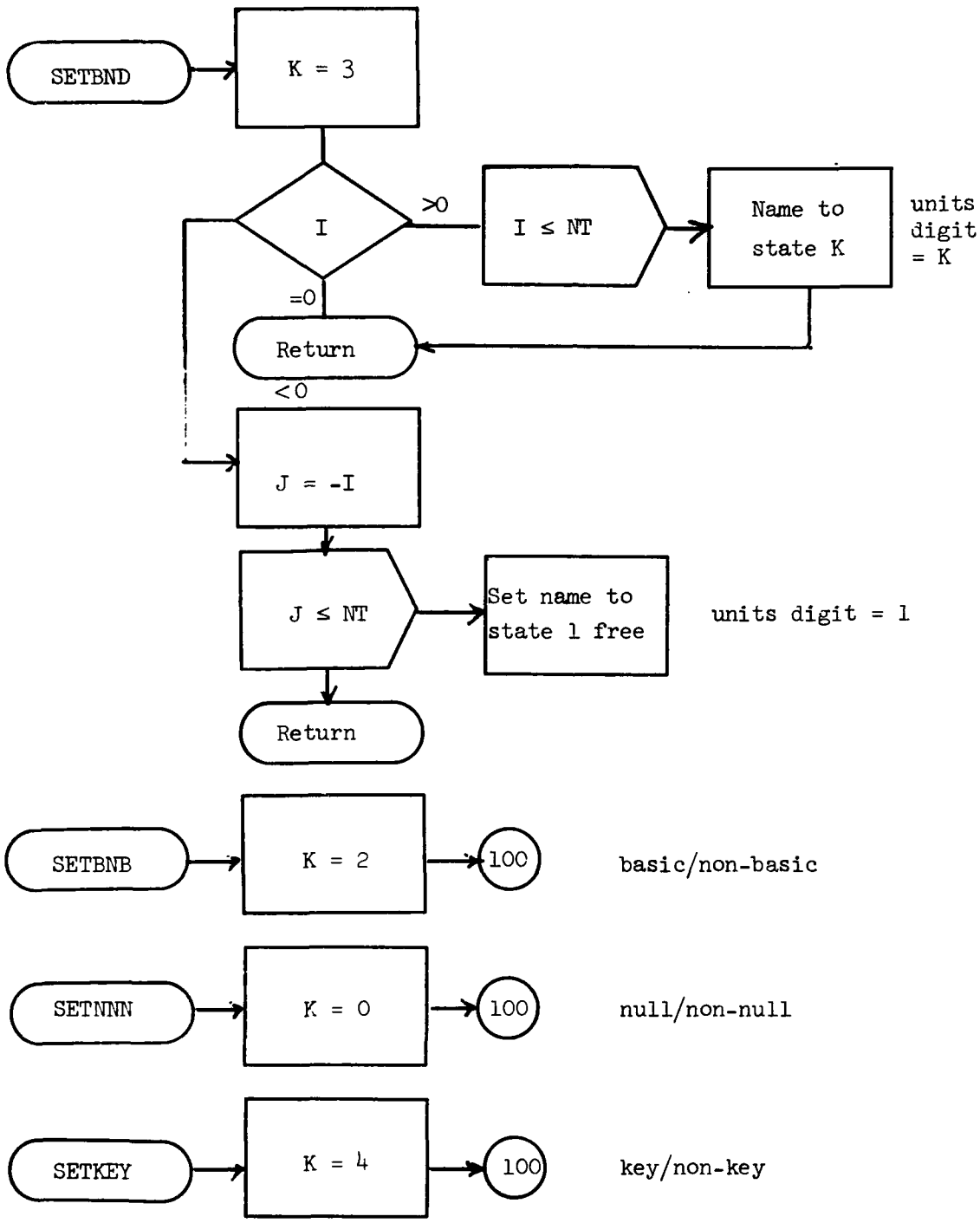

FUNCTION DOT, DOTS

DOT and DOTS evaluate double and single precision inner products

DOT = x'y.

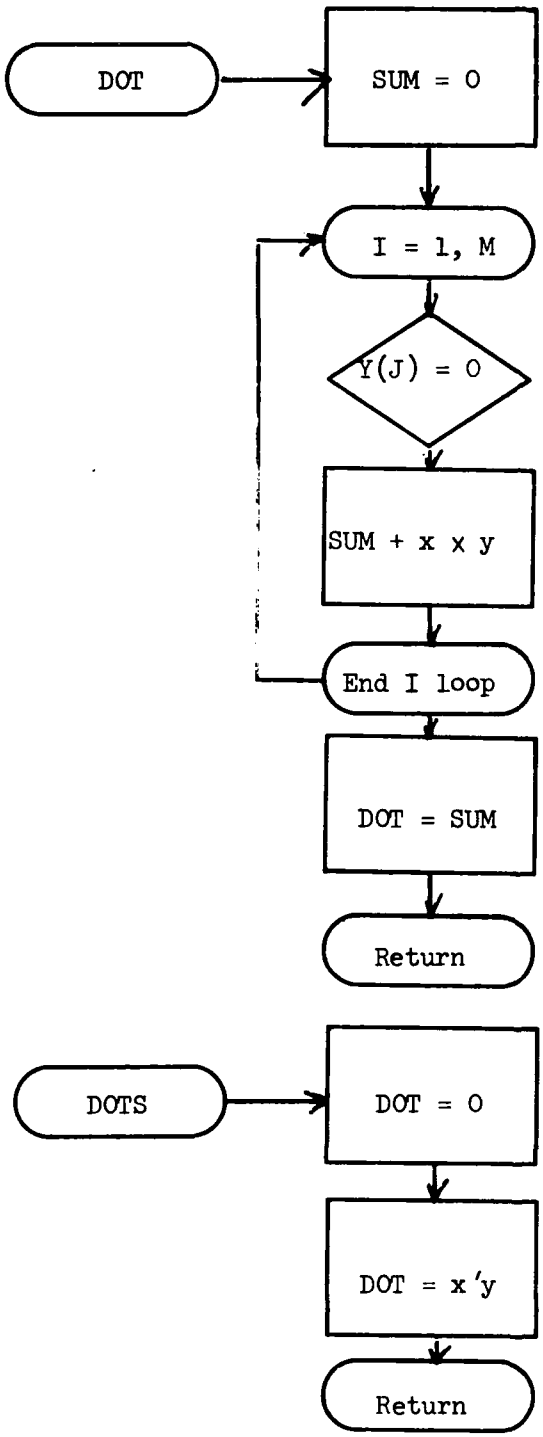

double precision accumalator

in x'y y elements are often zero (as used) avoid double precision manipulations for this case

Replace double answer to single

quick single precision version to save time

FUNCTION BOUND

BOUND - checks its argument and picks up the variable bound value.

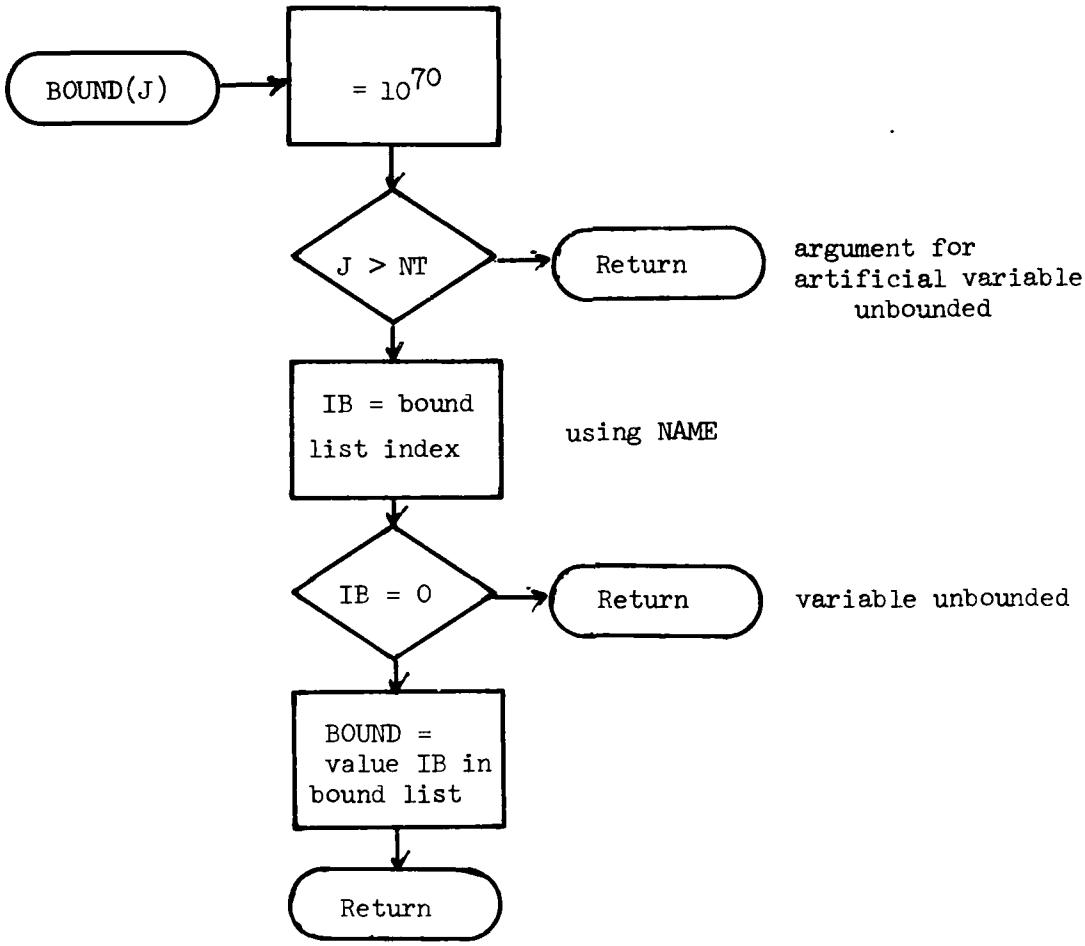

NB. NAME format has <u>least</u> significant decimal digits as shown.

```
.......O O B B|K K K K|S
              |       |
 bound index  |  GUB  | state
    or O      | packet|
```

Function KEYFND

KEYFND finds key column of a packet in core or returns 0.

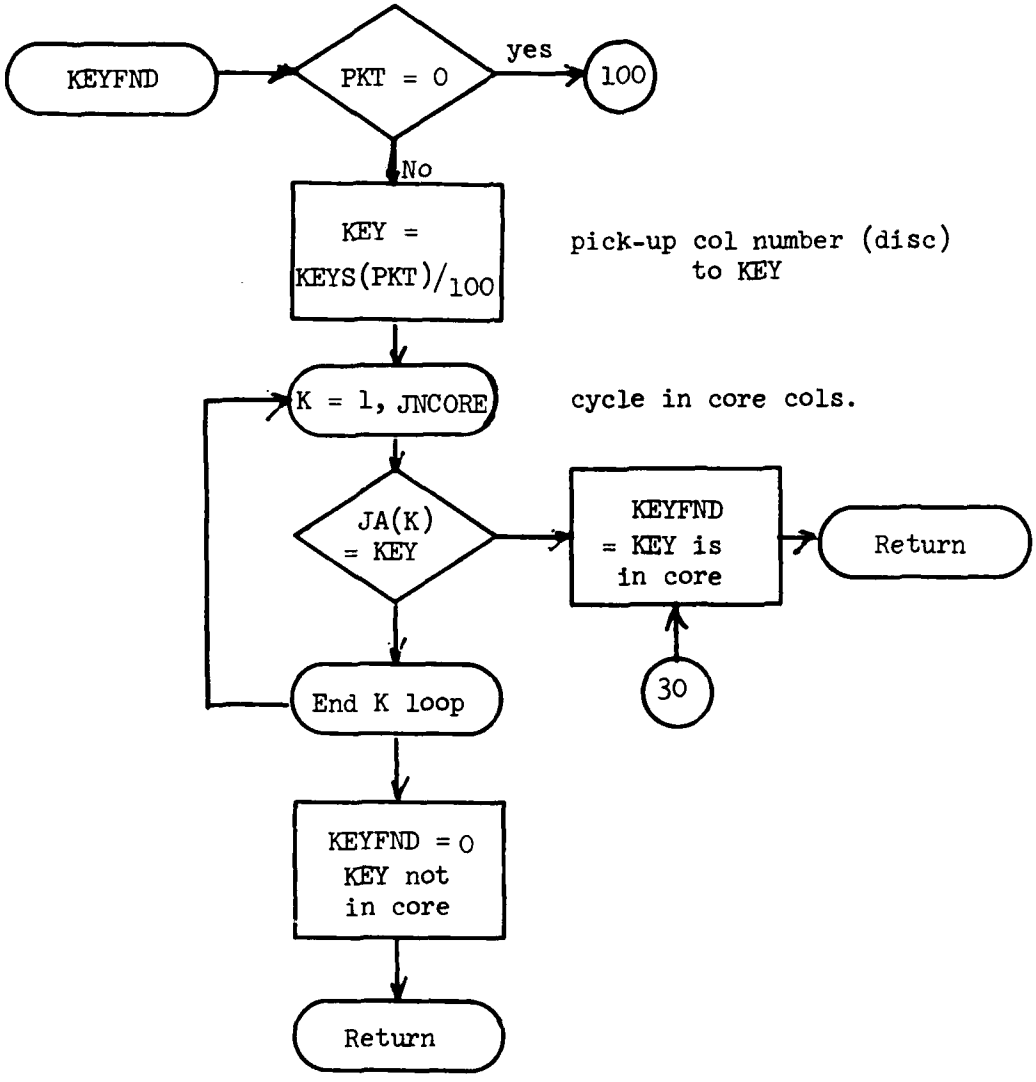

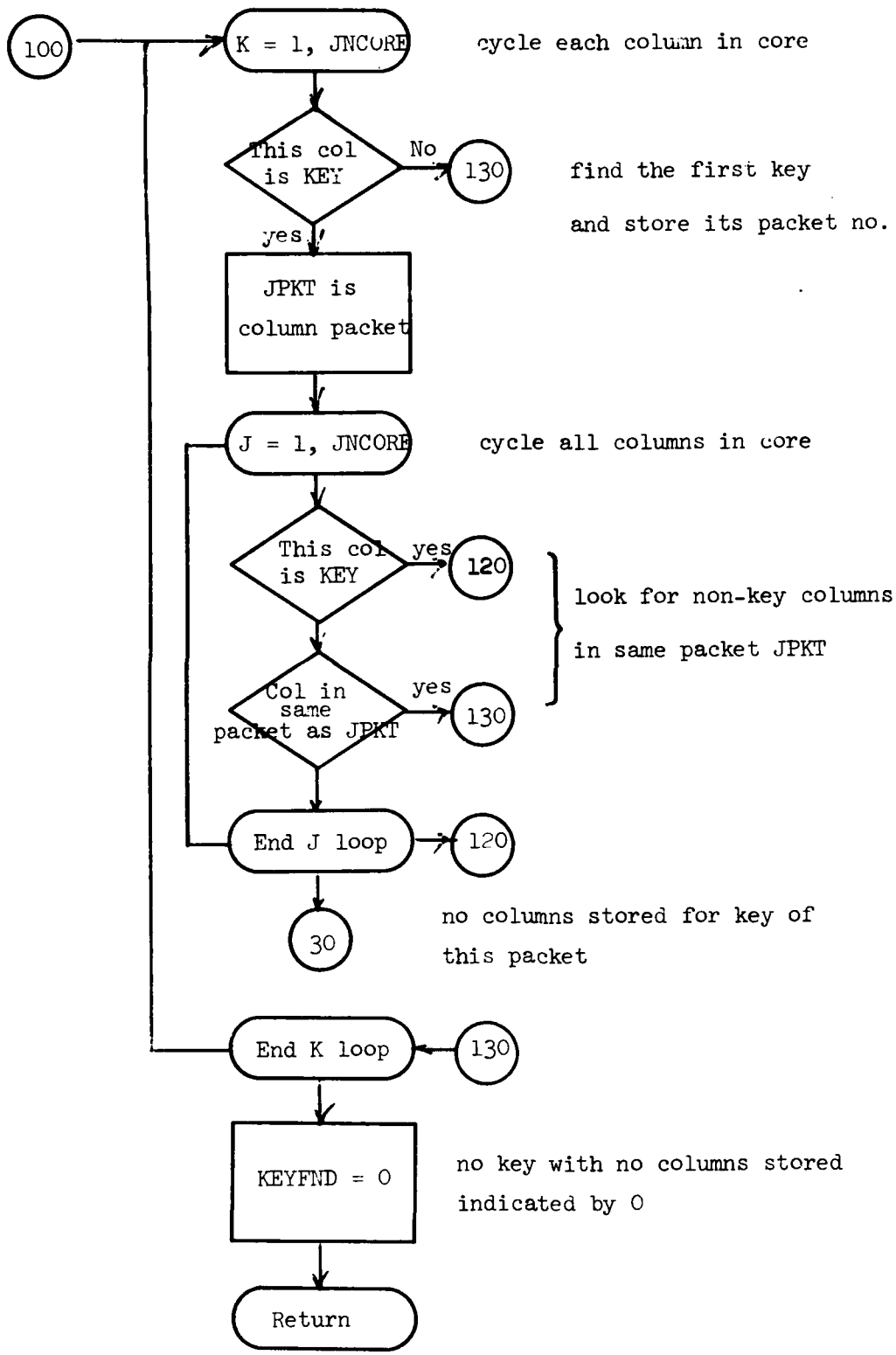
100
K = 1, JNCORE
cycle each column in core
This col is KEY
No
130
find the first key
and store its packet no.
yes
JPKT is column packet
J = 1, JNCORE
cycle all columns in core
This col is KEY
yes
120
look for non-key columns
in same packet JPKT
Col in same packet as JPKT
yes
130
End J loop
120
30
no columns stored for key of
this packet
End K loop
130
KEYFND = 0
no key with no columns stored
indicated by 0
Return

PROGRAM REPGEN

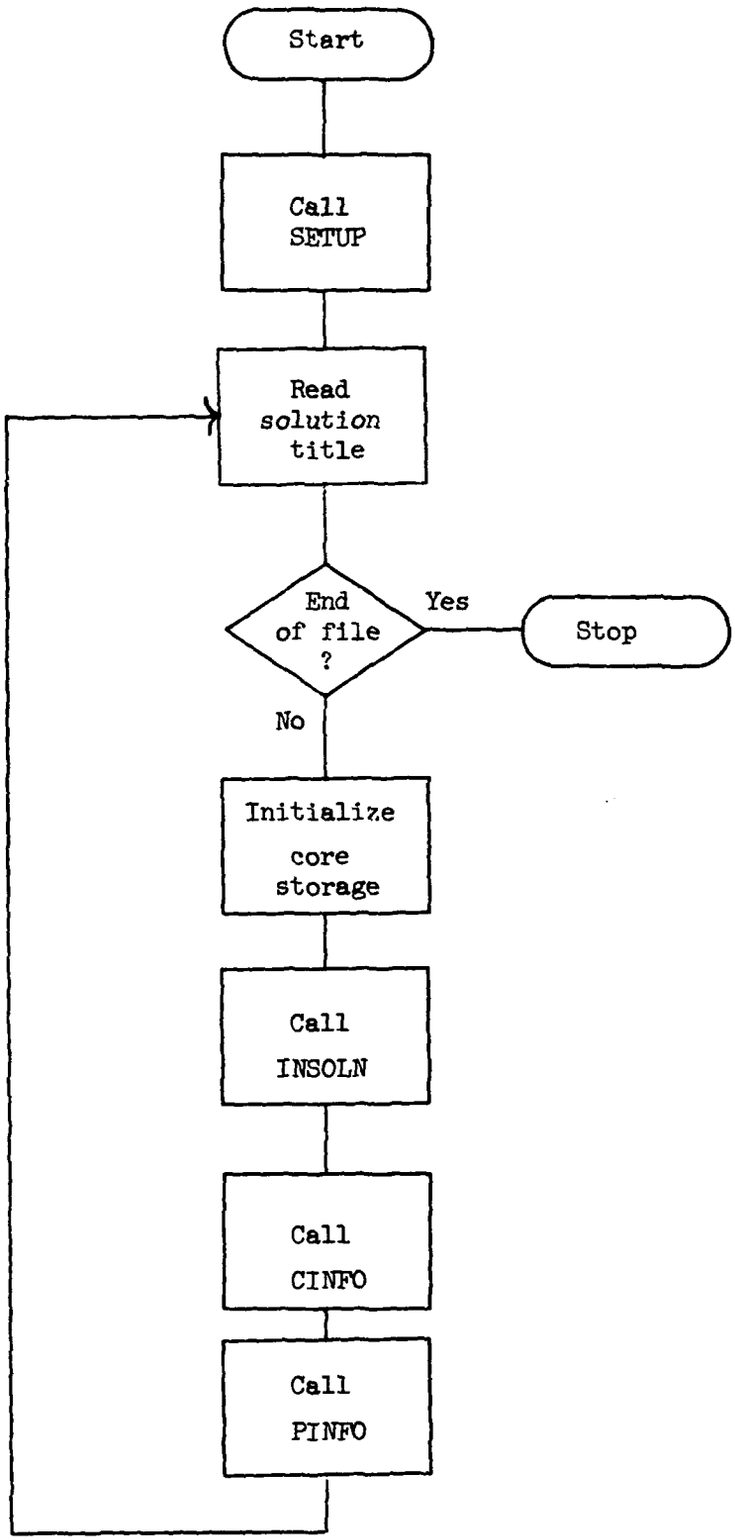

SUBROUTINE SETUP

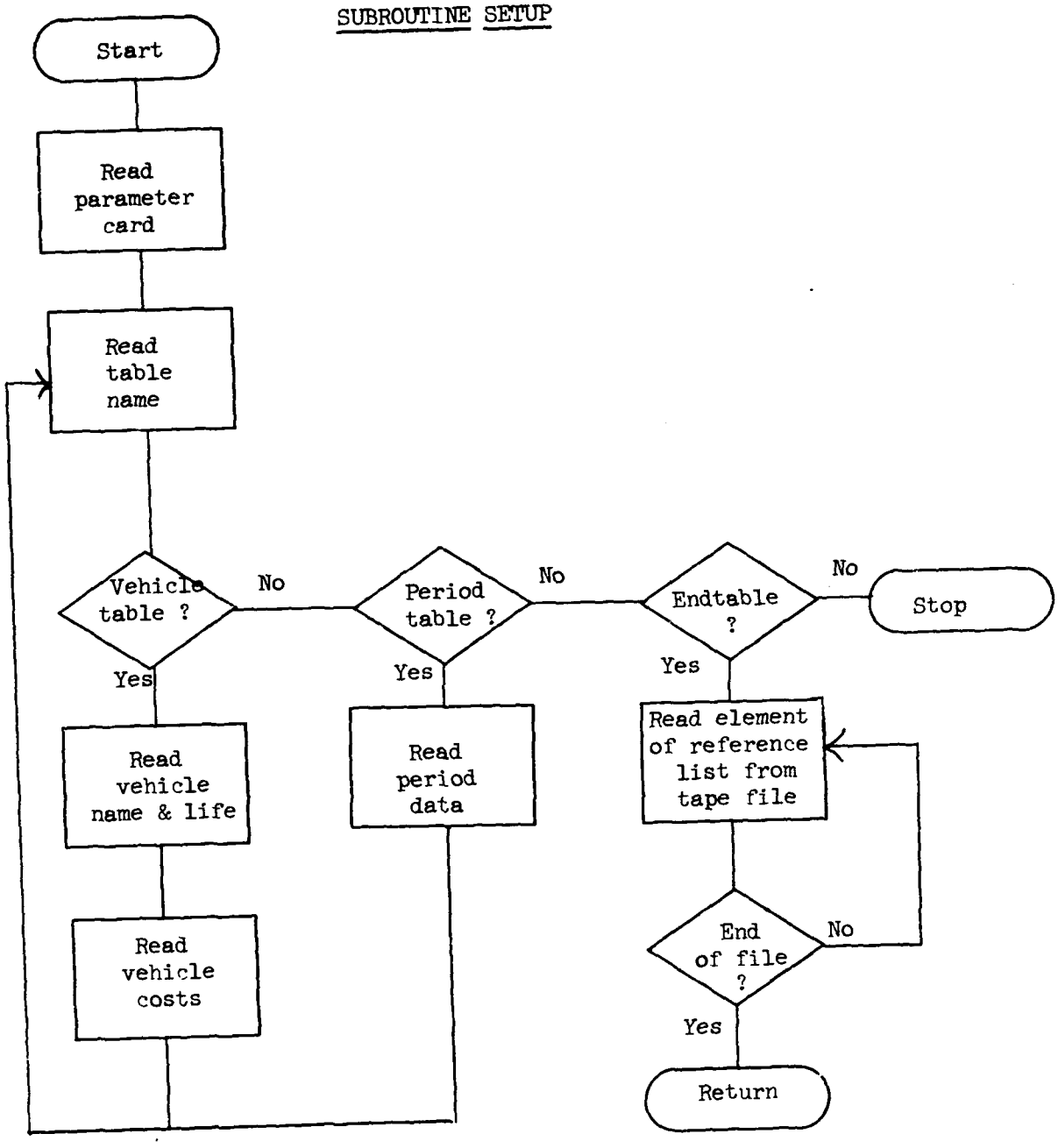

SUBROUTINE INSOLN

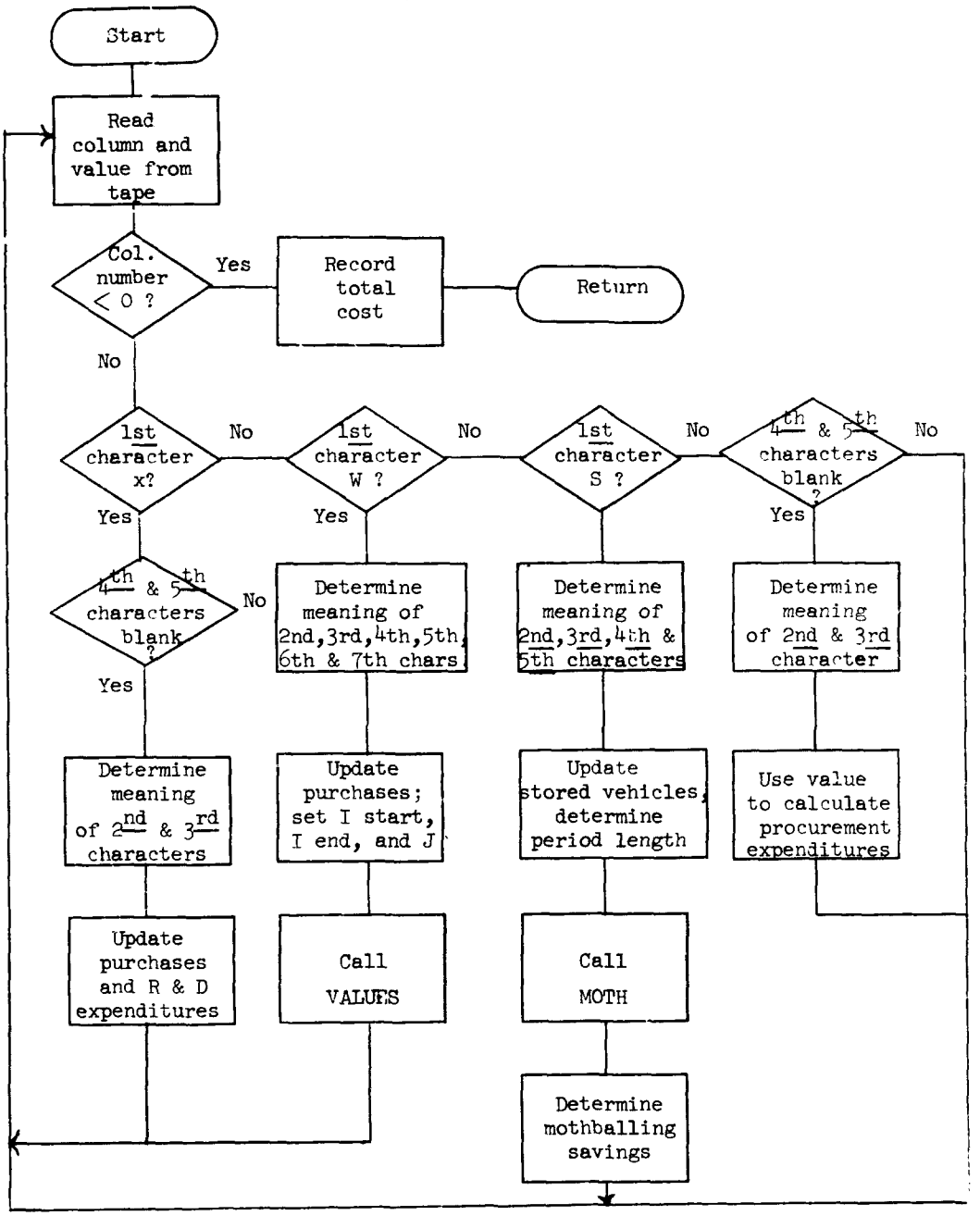

450 CONTINUE

SUBROUTINE VALUES

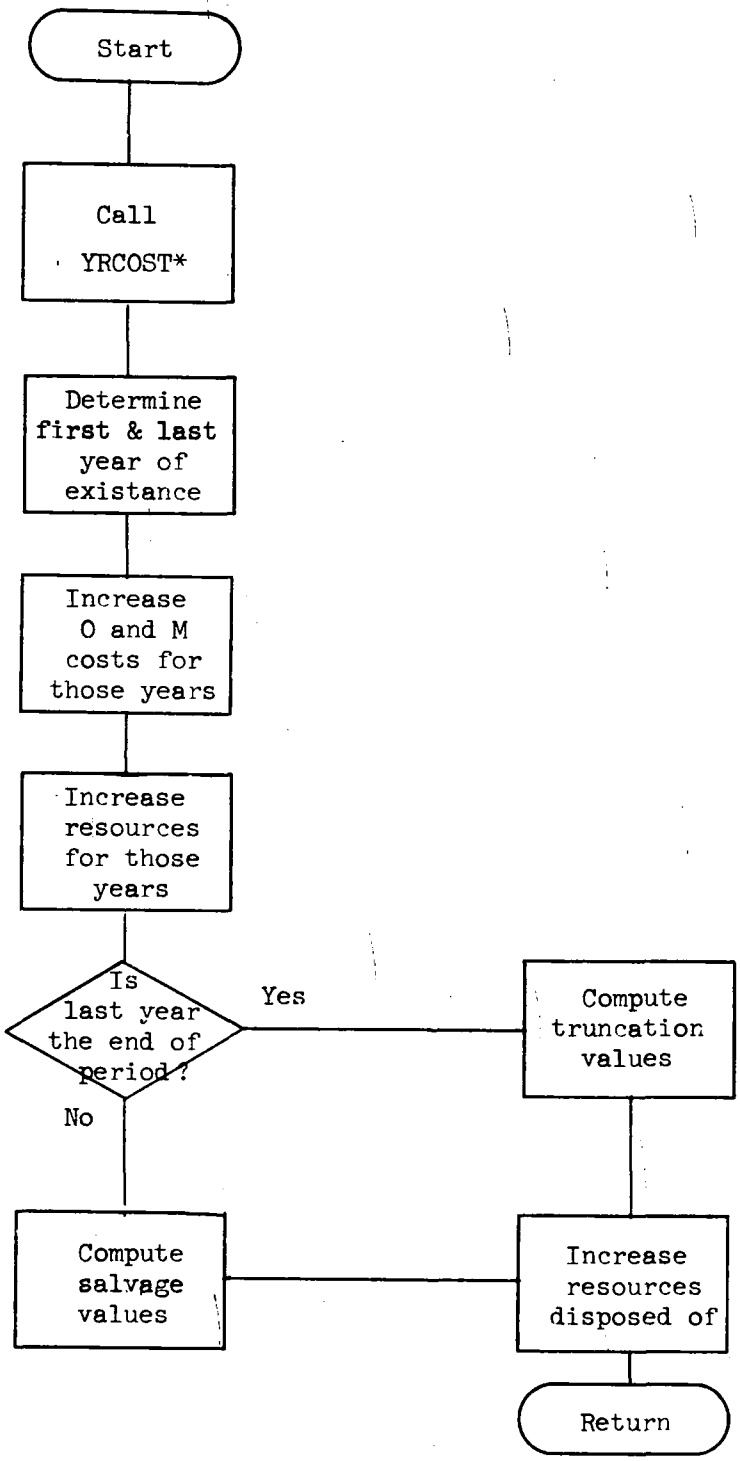

* This is the same routine as used in the matrix generator; its documentation is found there.

SUBROUTINE CINFO

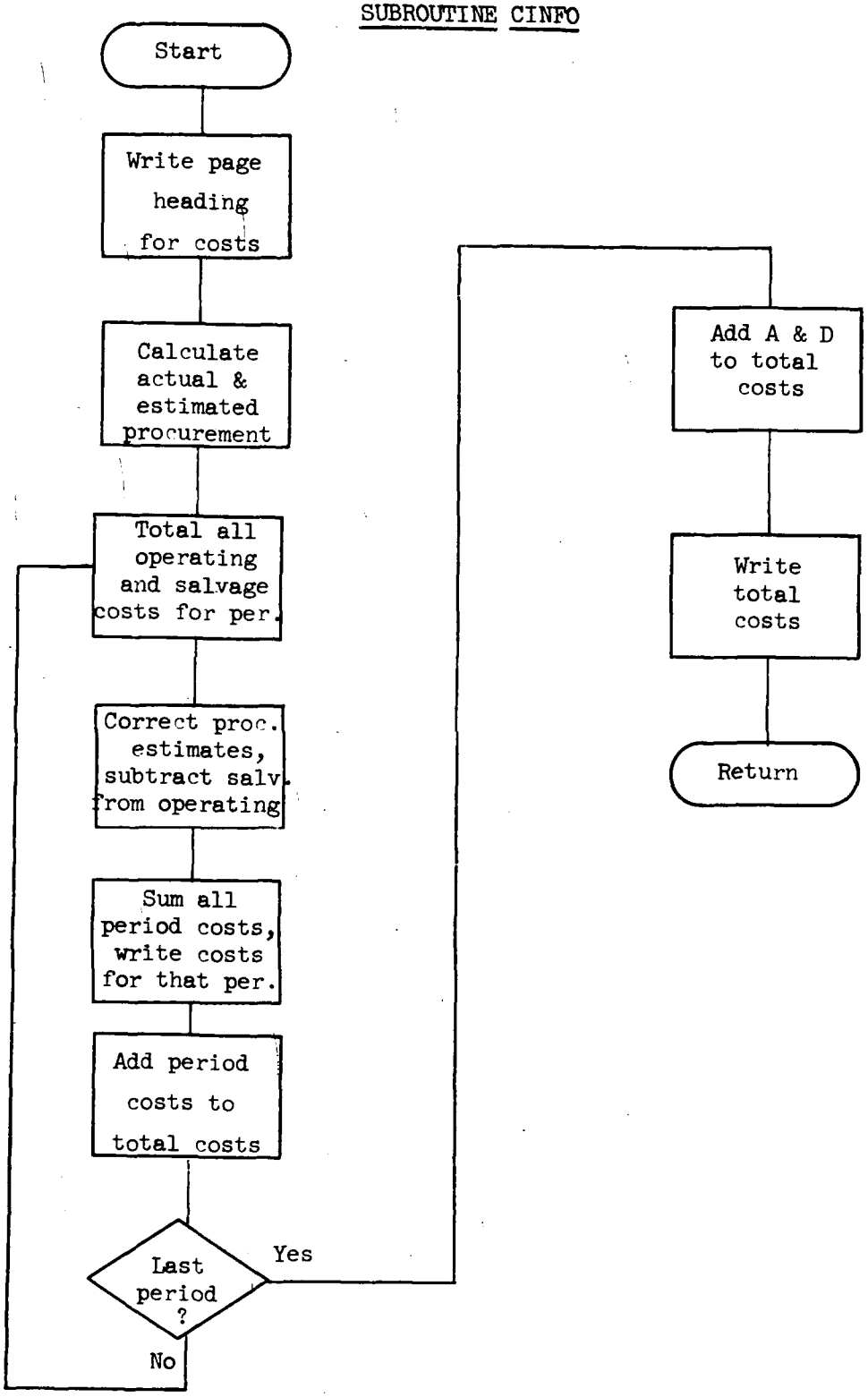

SUBROUTINE PINFO

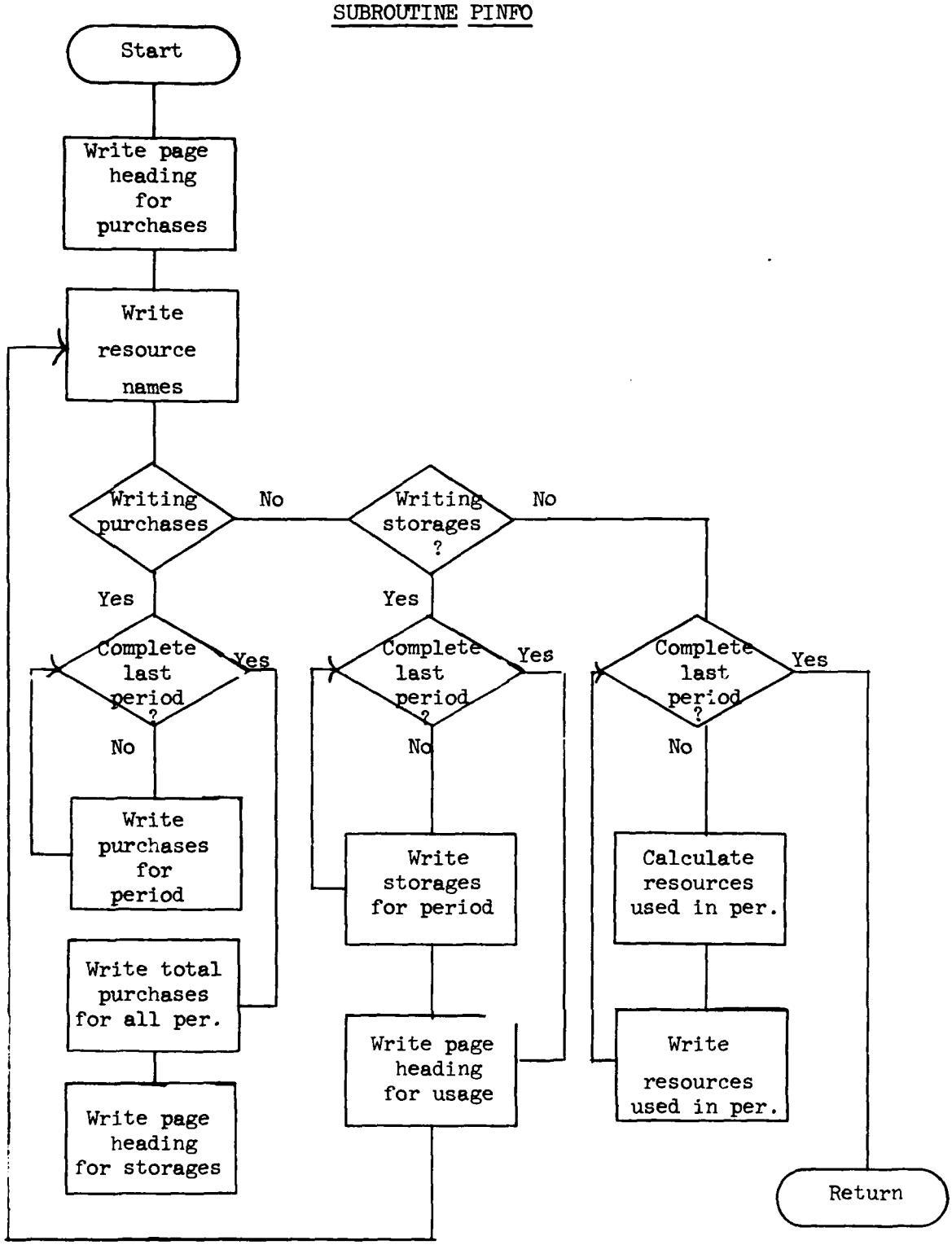

APPENDIX D

PROGRAM LISTING

GENLCP & SUBROUTINES D-2

BBCAV2 & SUBROUTINES D-22

REPGEN & SUBROUTINES D-86

```
      PROGRAM GENLCP(INPUT,OUTPUT,TAPE5=INPUT,TAPE6=OUTPUT,TAPE4,TAPE9,
     *TAPE7)
C THIS PROGRAM GENERATES THE MATRIX FILE FOR THE LEAST COST PHASE-IN
C PROBLEM.
C
C  THE DIMENSIONS HAVE BEEN SET TO HANDLE
C   MAXIMUM NUMBER OF VEHICLES          =7
C   MAXIMUM VEHICLE LIFE     (IN YEARS) =25
C   MAXIMUM NUMBER OF YEARS PRIOR TO SY=16
C   MAXIMUM NUMBER OF TASK TABLES       =8
C   MAXIMUM NUMBER OF ALTERNATIVES      =288
      COMMON /VECSTG/ VNAME(10), C,LENP, VLIFE(10), INH(10,16),
     * VCOST(10,5), NAMEN(10), COSTS(3 ,3)
      COMMON / ALTSTG / ALTER(288,9),YAVL(10)
      INTEGER ALTER
      INTEGER FNAME, SY,LY,VNAME,YAVL,VLIFE,YEAR(21)
      DIMENSION BUDG(10)
      DIMENSION NVEHU(20),NL(10),NN(10)
      DIMENSION NAMES(10), AU(16), UB(10),YRINT(20)
      COMMON /TSKSTG/ U(7,288,9) ,NTSK( 9)
      COMMON /PROSTG/ NPERYR(10,3), NPTASK(10, 9), PTASK(10,9)
      DIMENSION IHVN(10)
      DIMENSION NP(288),NM(9),NPM(10)
C
      DATA(NP(I),I=1,240)/2H01,2H02,2H03,2H04,2H05,2H06,2H07,2H08,2H09,
     *2H10,2H11,2H12,2H13,2H14,2H15,2H16,2H17,2H18,2H19,2H20,2H21,2H22,
     *2H23,2H24,2H25,2H26,2H27,2H28,2H29,2H30,2H31,2H32,2H33,2H34,2H35,
     * 2H36,2H37,2H38,2H39,2H40,2H41,2H42,2H43,2H44,2H45,2H46,2H47,2H48,
     * 2H49,2H50,2H51,2H52,2H53,2H54,2H55,2H56,2H57,2H58,2H59,2H60,
     * 2H61,2H62,2H63,2H64,2H65,2H66,2H67,2H68,2H69,2H70,2H71,2H72,
     * 2H73,2H74,2H75,2H76,2H77,2H78,2H79,2H80,2H81,2H82,2H83,2H84,
     * 2H85,2H86,2H87,2H88,2H89,2H90,2H91,2H92,2H93,2H94,2H95,2H96,
     * 2H97,2H98,2H99,2HA0,2HA1,2HA2,2HA3,2HA4,2HA5,2HA6,2HA7,2HA8,
     * 2HA9,2HB0,2HB1,2HB2,2HB3,2HB4,2HB5,2HB6,2HB7,2HB8,2HB9,2HC0,
     * 2HC1,2HC2,2HC3,2HC4,2HC5,2HC6,2HC7,2HC8,2HC9,2HD0,2HD1,2HD2,
     * 2HD3,2HD4,2HD5,2HD6,2HD7,2HD8,2HD9,2HE0,2HE1,2HE2,2HE3,2HE4,
     * 2HE5,2HE6,2HE7,2HE8,2HE9,2HF0,2HF1,2HF2,2HF3,2HF4,2HE5,2HF6,
     * 2HF7,2HF8,2HF9,2HG0,2HG1,2HG2,2HG3,2HG4,2HG5,2HG6,2HG7,2HG8,
     * 2HG9,2HH0,2HH1,2HH2,2HH3,2HH4,2HH5,2HH6,2HH7,2HH8,2HH9,2HJ0,
     * 2HJ1,2HJ2,2HJ3,2HJ4,2HJ5,2HJ6,2HJ7,2HJ8,2HJ9,2HK0,2HK1,2HK2,
     * 2HK3,2HK4,2HK5,2HK6,2HK7,2HK8,2HK9,2HL0,2HL1,2HL2,2HL3,2HL4,
     * 2HL5,2HL6,2HL7,2HL8,2HL9,2HM0,2HM1,2HM2,2HM3,2HM4,2HM5,2HM6,
     * 2HM7,2HM8,2HM9,2HN0,2HN1,2HN2,2HN3,2HN4,2HN5,2HN6,2HN7,2HN8,
     * 2HN9,2HP0,2HP1,2HP2,2HP3,2HP4,2HP5,2HP6,2HP7,2HP8,2HP9,2HQ0/
      DATA(NP(I),I=241,288)/2HQ1,2HQ2,2HQ3,2HQ4,2HQ5,2HQ6,2HQ7,2HQ8,
     *2HQ9,2HR0,2HR1,2HR2,2HR3,2HR4,2HR5,2HR6,2HR7,2HR8,2HR9,2HT0,2HT1,
     *2HT2,2HT3,2HT4,2HT5,2HT6,2HT7,2HT8,2HT9,2HU0,2HU1,2HU2,2HU3,2HU4,
     *2HU5,2HU6,2HU7,2HU8,2HU9,2HW0,2HW1,2HW2,2HW3,2HW4,2HW5,2HW6,
     *2HW7,2HW8/
      DATA NM/2HM1,2HM2,2HM3,2HM4,2HM5,2HM6,2HM7,2HM8,2HM9/
      DATA NZ/2H00/
      DATA SX,SW,SP,SS,SR,SG/1HX,1HW,1HP,1HS,1HB,1HG/
      DATA IVT,ITT,IPT,IED /8HVEHICLE  ,8HTASK    ,8HPERIOD  ,
     * 8HENDTABLE /
      ONE=1.0
      ONEM=-1.0
C
```

```
      DO 3 I=1,7                                                        10000580
      DO 2 J=1,288                                                      10000590
      DO 1 K=1,9                                                        10000600
      U(I,J,K)=0.0                                                      10000610
    1 CONTINUE                                                          10000620
    2 CONTINUE                                                          10000630
    3 CONTINUE                                                          10000640
C THE FIRST DATA CARD CONTAINS 1A. THE FILENAME TO BE USED =FNAME       10000650
C                              1B. THE STARTING YEAR (OR DECISION YEAR) 10000660
C                              1C. THE LAST YEAR = LY              =SY  10000670
C                              2A. THE NUMBER OF VEHICLES = NV          10000680
C                              2B. THE NUMBER OF TASKS    = NT          10000690
C                              2C. THE NUMBER OF PERIODS  = NPP         10000700
C                              3A. -P(L-1) PARAMETER                    10000710
      READ(5,1000) FNAME, SY,LY, NV,NT,NPP,IZPLM1                       10000720
 1000 FORMAT(A8,2X,6I5)                                                 10000730
      WRITE(6,1010)FNAME, SY,LY, NV,NT,NPP                              10000740
 1010 FORMAT(50H1 GENERATING THE MATRIX FOR THE LEAST COST PHASE-IN PROB10000750
     *LEM  /11H0FILENAME= ,A8,15H STARTING YEAR =,I5,12H LAST YEAR =,I5,10000760
     */11H WILL INPUT,I3,20H VEHICLE TABLES, AND, I3,18H TASK TABLE, AND10000770
     *, I3,15H PERIOD TABLES. )                                         10000780
      NVP=0                                                             10000790
      NTP=0                                                             10000800
      NPT=0                                                             10000810
      NIV=0                                                             10000820
      NINHP=0                                                           10000830
C  READ TITLE OF NEXT TABLE                                             10000840
   10 READ(5,1000) ITABLE                                               10000850
C  DECIDE THE TYPE OF TABLE AND GO READ ITS DATA                        10000860
      IF(ITABLE .EQ. IVT) GO TO 20                                      10000870
   11 IF(ITABLE .EQ. ITT) GO TO 40                                      10000880
      IF(ITABLE .EQ. IPT) GO TO 60                                      10000890
      IF(ITABLE .EQ. IEO) GO TO 100                                     10000900
C  THE TABLE NAME IS NOT RECOGNIZED, THERE IS AN INPUT ERROR            10000910
      WRITE(6,1020) ITABLE                                              10000920
 1020 FORMAT(1X,A8,60H IS NOT A TABLE NAME, INPUT ERROR. EXECUTION IS TE10000930
     *RMINATED.     )                                                   10000940
      STOP 1                                                            10000950
   20 WRITE(6,1030)                                                     10000960
 1030 FORMAT( 30H0 READING IN A VEHICLE TABLE     )                     10000970
      NVP=NVP+1                                                         10000980
      READ(5,1040) VNAME(NVP), YAVL(NVP), VLIFE(NVP)                    10000990
      WRITE(6,1050)VNAME(NVP), YAVL(NVP), VLIFE(NVP)                    10001000
 1040 FORMAT(A8,1X,I4,6X,I2)                                            10001010
 1050 FORMAT(1X,A8,2X,2I10)                                             10001020
C YNAME=NAME OF VEHICLE, YAVL= 1ST YEAR VEHICLE AVALIBLE,               10001030
C VLIFE= MAXIMUM LIFE OF VEHICLE IN YEARS.                              10001040
C                                                                       10001050
C IF THIS VEHICLE WAS AVALIBLE BEFORE THE STARTING YEAR, THEN READ IN   10001060
C SIZE OF INHERITED FLEET, BY YEAR BUILT.                               10001070
      NU=SY - YAVL(NVP)                                                 10001080
      IF( NU .LE. 0) GO TO 25                                           10001090
      NIV=NIV+1                                                         10001100
      IA=1                                                              10001110
      IB=8                                                              10001120
   23 READ(5,1060)(INH(NVP,I),I=IA,IB)                                  10001130
 1060 FORMAT(8I10)                                                      10001140
      IF(IB .GE. NU) GO TO 25                                           10001150
```

Reproduced from best available copy.

```
      IA=IB+1                                                           10001160
      IB=IB+8                                                           10001170
      GO TO 23                                                          10001180
   25 READ (5,1070) (VCOST(NVR,I),I=1,5)                                10001190
 1070 FORMAT (5F10.2)                                                   10001200
C  VCOST(NVR,1) .GT. 1.0E30 INDICATES THIS VEHICLE IS NOT AVALIABLE FOR 10001210
C  PURCHASE.                                                            10001220
      GO TO 10                                                          10001230
C                                                                       10001240
C  IT IS ASSUMED THAT ALL VEHICLE TABLES ARE INPUTED FIRST.             10001250
   40 WRITE(6,1080)                                                     10001260
 1080 FORMAT(25H0 READING IN A TASK TABLE  )                            10001270
      NTR=NTR+1                                                         10001280
      READ(5,1090)  IDT,NU,NA                                           10001290
      WRITE(6,1090) IDT,NU,NA                                           10001300
 1090 FORMAT(3I10)                                                      10001310
C  IDT=TASK IDENTIFICATION NUMBER, NU=NUMBER OF VEHICLES,               10001320
C  NA=NUMBER OF ALTERNATIVES                                            10001330
      NTSK(IDT)=NA                                                      10001340
      IA=1                                                              10001350
      IB=8                                                              10001360
   43 READ(5,1100) (NAMES(I),I=IA,IB)                                   10001370
 1100 FORMAT(8(A8,2X))                                                  10001380
      IF(IB .GE. NU) GO TO 45                                           10001390
      IA=IB+1                                                           10001400
      IB=IB+8                                                           10001410
      GO TO 43                                                          10001420
   45 DO 47 I=1,NU                                                      10001430
      DO 46 J=1,NVR                                                     10001440
      IF(VNAME(J) .NE. NAMES(I)) GO TO 46                               10001450
      NAMES(I)=J                                                        10001460
      GO TO 47                                                          10001470
   46 CONTINUE                                                          10001480
      WRITE(6,1110) NAMES(I)                                            10001490
 1110 FORMAT(154H0 VEHICLE NAME ,A8,60H NOT DEFINED IN A VEHICLE TABLE, E10001500
     *XECUTION TERMINATED.          )                                  10001510
      STOP 2                                                            10001520
   47 CONTINUE                                                          10001530
C                                                                       10001540
C  NOW READ IN U(J,K,L), NUMBER OF VEHICLES OF TYPE J REQUIRED TO       10001550
C  PERFORM TASK L WITH ALTERNATIVE K.                                   10001560
      DO 55 K=1,NA                                                      10001570
      IA=1                                                              10001580
      IB=8                                                              10001590
   48 READ(5,1120) (AU(I),I=IA,IB)                                      10001600
 1120 FORMAT(8F10.0)                                                    10001610
      IF(IB .GE. NU) GO TO 49                                           10001620
      IA=IB+1                                                           10001630
      IB=IB+8                                                           10001640
      GO TO 43                                                          10001650
   49 DO 50 I=1,NU                                                      10001660
      J=NAMES(I)                                                        10001670
      U(J,K,IDT)=AU(I)                                                  10001680
   50 CONTINUE                                                          10001690
   55 CONTINUE                                                          10001700
   56 READ(5,1000) ITABLE                                               10001710
      GO TO 11                                                          10001720
C                                                                       10001730
```

```
   60 WRITE(6,1130)                                                     10001740
 1130 FORMAT(30H0 READING IN A PERIOD TABLE      )                      10001750
C  THE PERIOD TABLES ARE EXPECTED IN CHRONOLOGICAL ORDER.              10001760
      NPT=NPT+1                                                         10001770
      READ (5,1140) (NPERYR(NPT,I),I=1,2),RUDG(NPT)                     10001780
 1140 FORMAT (I4,I5,3X,F8.2)                                            10001790
      WRITE(6,1150)(NPERYR(NPT,I),I=1,2)                                10001800
 1150 FORMAT(2I5)                                                       10001810
      IF(NPT .EQ. 1) GO TO 61                                           10001820
      IF(NPERYR(NPT-1,2)+1 .EQ. NPERYR(NPT,1) ) GO TO 61                10001830
      WRITE(6,1155)                                                     10001840
 1155 FORMAT(35H THE PERIOD TABLES ARE OUT OF ORDER )                   10001850
      STOP 3                                                            10001860
   61 IF(SY .GT. NPERYR(NPT,1) ) GO TO 70                               10001870
      READ(5,1158) NU,YRINT(NPT)                                        10001880
 1158 FORMAT (I10,F10.7)                                                10001890
C  ALL THE TASKS ARE SCALED BY THE FACTOR YRINT(NPT) IN THE  PERIOD NPT 10001900
      NPERYR(NPT,3)=NU                                                  10001910
      IA=1                                                              10001920
      IB=8                                                              10001930
      NA=NPT-NINHP                                                      10001940
   63 READ(5,1160)((NPTASK(NA,I), PTASK(NA,I)),I=IA,IB)                 10001950
 1160 FORMAT(8(I5,F5.0))                                                10001960
      IF(IB .GE. NU) GO TO 56                                           10001970
      IA=IB+1                                                           10001980
      IB=IB+8                                                           10001990
      GO TO 63                                                          10002000
   70 NINHP=NINHP+1                                                     10002010
      GO TO 56                                                          10002020
C                                                                       10002030
C  ALL TABLE HAVE BEEN READ IN. NOW PROCESS THEM TO BE ABLE TO GENERATE 10002040
C  THE MATRIX.                                                          10002050
C  FIRST CHECK TO DETERMINE IF THE EXPECTED NUMBER OF TABLE WERE INPUTED10002060
  100 IF((NV .EQ. NVP) .AND. (NT .EQ. NTP) .AND. (NPP.EQ. NPT))GO TO 105 10002070
      WRITE(6,1170)                                                     10002080
 1170 FORMAT(71H WARNING-THE NUMBER OF TABLE ACTUALLY INPUT WAS NOT THE 10002090
     *EXPECT NUMBER.    )                                              10002100
C                                                                       10002110
C  ORDER THE VEHICLES SO THE ARE IN DECENDING ORDER OF R+D COST.        10002120
  105 NRD=0                                                             10002130
      DO 107 I=1,NVP                                                    10002140
      NAMEN(I)=I                                                        10002150
      IF(VCOST(I,3) .LE. 0.0) GO TO 107                                 10002160
      NRD=NRD+1                                                         10002170
  107 CONTINUE                                                          10002180
      IF(NRD.EQ.0) GO TO 151                                            10002190
      NV=NVP-1                                                          10002200
      DO 120 II=1,NV                                                    10002210
      I=NAMEN(II)                                                       10002220
      IMAX=II                                                           10002230
      IP1=II+1                                                          10002240
      CMAX=VCOST(I,3)                                                   10002250
      DO 110 JJ=IP1,NVP                                                 10002260
      J=NAMEN(JJ)                                                       10002270
      IF(CMAX .GE. VCOST(J,3))GO TO 110                                 10002280
      IMAX=JJ                                                           10002290
      CMAX=VCOST(J,3)                                                   10002300
  110 CONTINUE                                                          10002310
```

```
      J=NAMEN(IMAX)
      NAMEN(IMAX)=NAMEN(II)
      NAMEN(II)=J
      IF(VCOST(J,3) .GT. 0.0) GO TO 125
      GO TO 125
  120 CONTINUE
C
C NOW DETERMINE IF FOR ANY R+D VEHICLE ITS DEVELOPMENT IS NOT OPTIONAL.
C  IT IS ASSUMED ALL TASKS ARE PREFORMED DURING SOME PERIOD AND
C  THE TASKS HAVE BEEN NUMBERED SEQUENTIALLY.
  125 DO 140 I=1,NRD
      NAMES(I)=1
      J=NAMEN(I)
      DO 133 L=1,NTR
      NA=NTSK(L)
      DO 130 K=1,NA
      IF(U(J,K,L) .EQ. 0.0) GO TO 133
  130 CONTINUE
C  FOUND A TASK REQUIRING THAT VEHICLE J BE DEVELOPED
      NAMES(I)=2
      GO TO 140
  133 CONTINUE
  140 CONTINUE
C  NAMES(I)=2 IF THE I TH MOST EXPENSIVE R+D COSTING VEHICLE MUST BE
C  DEVELOPED, =1 OTHERWISE
C  IF A VEHICLE MUST BE DEVELOPED TREAT IT AS IF ITS R+D COST =0
      NA=0
      DO 145 I=1,NRD
      K=NAMES(I)
      GO TO (145,143),K
  143 L=NAMEN(I)
      IP1=I+1
      K=NRD-NA
      DO 144 II=IP1,K
  144 NAMEN(II-1)=NAMEN(II)
      NAMEN(K)=L
      NA=NA+1
  145 CONTINUE
      NRD=NRD-NA
C  LIST VECHILE NAMES AND CORRESPONDING VARABLE LABELS.
      WRITE(6,1180)
 1180 FORMAT(33H0   VEHICLE NAME    VARIABLE NAME /  8X,
     *                  21HOPTIONAL R+D VEHICLES  )
      DO 150 II=1,NRD
      I=NAMEN(II)
      WRITE(6,1190) VNAME(I), NP(II)
 1190 FORMAT(6X, A8, 5X, 1HX,A2)
  150 CONTINUE
      IF(NVR .LE. NRD) GO TO  200
  151 WRITE(6,1200)
 1200 FORMAT(13X,14HOTHER VEHICLES )
      J=NRD+1
      DO 155 II=J,NVR
      I=NAMEN(II)
      WRITE(6,1190) VNAME(I), NP(II)
  155 CONTINUE
C
      NROW=0
```

```
      NCOL=0
C LIST ROW NAMES
  200 WRITE(6,1210) ENAME
 1210 FORMAT(2H *, 4HNAME,11X,A8/ 2H *,4HROWS)
      WRITE(4,1211) ENAME
 1211 FORMAT      ( 4HNAME,10X,A8/ 4HROWS)
C
C
C  NOW THE ROW LABELS FOR THE MASTER VARIABLES
      DO 220 T=1,NVP
      WRITE(6,1240) NP(T)
 1240 FORMAT(2H *, 8H E  SUMX,A2)
      WRITE(4,1241) NP(T)
      NROW=NROW+1
 1241 FORMAT      ( 8H E  SUMX,A2)
  220 CONTINUE
C
C           ROWS FOR PROCUREMENT CONSTRAINTS
C
      IA=NPT-NINHP
      DO 225 I=1,IA
      WRITE (4,1225) NP(I)
 1225 FORMAT (6H E  PC,A2)
      WRITE (6,1224) NP(I)
 1224 FORMAT (2H *,6H E  PC,A2)
      NROW=NROW+1
  225 CONTINUE
C
C  NOW THE ROWS ACCOUNTING FOR THE INHERITED FLEET.
      IF(NINHP .EQ. 0) GO TO 300
      IB=NINHP - 1
      IF(IB .EQ. 0) GO TO 240
      DO 230 I=1,IB
      J=NINHP - I
      NPM(I)=NM(J)
  230 CONTINUE
  240 NPM(NINHP) =N7
      IF(NTV .EQ. 0) GO TO 300
      NA=NPD + 1
      JC=1
      DO 260 JJ=NA,NVP
      J=NAMEN(JJ)
      IF(YAVL(J) .GE. SY) GO TO 260
      THVN(JC)=JJ
      JC=JC+1
      DO 250 I=1,NINHP
      IF(YAVL(J) .GT. NPERYP(I,2)) GO TO 250
      IA=MAXO(YAVL(J),NPERYP(I,1)) - YAVL(J) + 1
      IB=NPERYP(I,2) - YAVL(J) + 1
      DO 245 K=IA,IB
      IF(INH(J,K) .GT. 0) GO TO 249
  245 CONTINUE
      GO TO 250
  249 WRITE(6,1250) NP(JJ),NPM(I)
 1250 FORMAT(2H *, 6H E  IW,A2,1HP,A2)
      WRITE(4,1251) NP(JJ),NPM(I)
      NROW=NROW+1
 1251 FORMAT      ( 6H E  IW,A2,1HP,A2)
```

```
  250 CONTINUE                                                          10003480
  260 CONTINUE                                                          10003490
C                                                                       10003500
C  NOW PUT OUT THE LABELS FOR THE ROWS FOR EACH PERIOD, THE VEHICLE     10003510
C  BALANCE ROWS FIRST, THEN THE TASK ROWS.                              10003520
  300 IA=NINHP + 1                                                      10003530
      DO 350 I=IA,NPT                                                   10003540
      IB=I - NINHP                                                      10003550
      NU=NPERYR(I,3)                                                    10003560
      DO 340 JJ=1,NVR                                                   10003570
C  IF THE VEHICLE IS NOT YET AVALIABLE IT CAN NOT BE USED.              10003590
      J=NAMEN(JJ)                                                       10003580
      IF(YAVL(J) .GT. NPERYR(I,2)) GO TO 340                            10003600
C  MAKE SURE THE VEHICLE IS USED                                        10003610
      DO 320 K=1,NU                                                     10003620
      KT=NPTASK(IB,K)                                                   10003630
      NA=NTSK(KT)                                                       10003640
      DO 310 K2=1,NA                                                    10003650
      IF(U(J,K2,KT) .NE. 0.0) GO TO 330                                 10003660
  310 CONTINUE                                                          10003670
  320 CONTINUE                                                          10003680
      GO TO 340                                                         10003690
  330 WRITE(6,1260) NP(JJ), NP(IB)                                      10003700
 1260 FORMAT(2H *,5H E  X,A2,1HP,A2)                                    10003710
      WRITE(4,1261) NP(JJ), NP(IB)                                      10003720
      NROW=NROW+1                                                       10003730
 1261 FORMAT     (5H E  X,A2,1HP,A2)                                    10003740
  340 CONTINUE                                                          10003750
      DO 345 K=1,NU                                                     10003760
      KT=NPTASK(IB,K)                                                   10003770
      WRITE(6,1270) NP(KT), NP(IB)                                      10003780
 1270 FORMAT(2H *, 5H E  T,A2,1HP,A2)                                   10003790
      WRITE(4,1271) NP(KT), NP(IB)                                      10003800
      NROW=NROW+1                                                       10003810
 1271 FORMAT     ( 5H E  T,A2,1HP,A2)                                   10003820
  345 CONTINUE                                                          10003830
  350 CONTINUE                                                          10003840
C                                                                       10003850
C  COMPUTE UPPER BOUNDS                                                 10003860
      DO 390 II=1,NVR                                                   10003870
      UB(II)=0.0                                                        10003880
      I2=NAMEN(II)                                                      10003890
      IA=NINHP+1                                                        10003900
      DO 380 I=IA,NPT                                                   10003910
      NU=NPERYR(I,3)                                                    10003920
      I1=I - NINHP                                                      10003930
      IF (YAVL(I2).GT.NPERYR(I,2)) GO TO 380                            10003940
      DO 375 J=1,NU                                                     10003950
      JJ=NPTASK(I1,J)                                                   10003960
      TF= PTASK(I1,J)                                                   10003970
      NA=NTSK(JJ)                                                       10003980
      UMAX=0.0                                                          10003990
      DO 370 K=1,NA                                                     10004000
      IF(UMAX .GT. U(I2,K,JJ) ) GO TO 370                               10004010
      UMAX=U(I2,K,JJ)                                                   10004020
  370 CONTINUE                                                          10004030
      UB(II)=UB(II) - TF*UMAX*YRINT(I)                                  10004040
  375 CONTINUE                                                          10004050
```

Reproduced from best available copy.

```
  380 CONTINUE
  390 CONTINUE
      WRITE(6,1220)
 1220 FORMAT(2H *,8H N  COST)
      WRITE(4,1221)
      NROW=NROW+1
 1221 FORMAT      (8H N  COST)
C
      WRITE(6,1280)
 1280 FORMAT(2H *, 7HCOLUMNS)
      WRITE(6,1290)
 1290 FORMAT(2H *,8X,*(PARTIAL LISTING)*)
      WRITE(4,1291)
 1291 FORMAT      ( 7HCOLUMNS)
C  NOW GENERATE THE MATRIX ELEMENTS.
C
C  THE XNN COLUMNS.
      DO 420 I=1,NVP
      II=NAMEN(I)
      WRITE(6,1300) NP(I),NP(I),ONEM
 1300 FORMAT(2H *,4X,1HX,A2,7X,                    4HSUMX,A2,4X,F12.4)
      WRITE(4,1301) NP(I),NP(I),ONEM
      MCOL=MCOL+1
 1301 FORMAT      (4X,1HX,A2,7X,                   4HSUMX,A2,4X,F12.4)
  420 CONTINUE
C
C       THE PNN COLUMNS
C
      IA=NPT-NTNHP
      DO 430 I=1,IA
      WRITE (4,1311) NP(I),NP(I),ONE
 1311 FORMAT (4X,1HP,A2,7X,2HPC,A2,6X,F12.4)
      WRITE (6,1310) NP(I),NP(I),ONE
 1310 FORMAT (2H *,4X, 1HP,A2,7X,2HPC,A2,6X,F12.4)
      MCOL=MCOL+1
      IF (I.EQ.IA) GO TO 430
       IF(IZPLM1.EQ.1) GO TO 430
      WRITE (4,1313) NP(I),NP(I+1),ONEM
      WRITE (6,1312) NP(I),NP(I+1),ONEM
 1312 FORMAT (2H *,4X,1HP,A2,7X,2HPC,A2,6X,F12.4)
 1313 FORMAT      (4X,1HP,A2,7X,2HPC,A2,6X,F12.4)
  430 CONTINUE
C
C  GENERATE THE WJJLLMM COLUMNS
C
  440 IF(NTV .EQ. 0) GO TO 480
      DO 470 II=1,NTV
      JJ=IHVM(II)
      J=NAMEN(JJ)
      CALL YRCOST(J)
      DO 460 I=1,NTNHP
      MAXL=VLIFE(J)
      IF(YAVL(J) .GT. NPERYR(I,2) ) GO TO 460
C  IT IS ASSUMED ALL THE VECHILES INHERITED FROM A PERIOD WERE PURCHASED
C  IN THE FIRST YEAR OF THE PERIOD.
      IA=MAX0(YAVL(J),NPERYR(I,1))- YAVL(J) + 1
      IB=NPERYR(I,2) - YAVL(J) + 1
      DO 445 K=IA,IB
```

```
      IF(INH(J,K) .GT. 0) GO TO 448
  445 CONTINUE
      GO TO 460
  448 NAGE=SY-NPERYR(I,1)
      C= COSTS(NAGE,2)
      LIFER=MAXL-NAGE
      IF(C .EQ. 0.0) GO TO 449
      C=-C
      WRITE(6,1330) NP(JJ),NPM(I),NZ, C
 1330 FORMAT(2H *,4X,1HW,A2,A2,A2,3X,4HCOST,6X,F12.4)
      WRITE(4,1331) NP(JJ),NPM(I),NZ, C
 1331 FORMAT     (4X,1HW,A2,A2,A2,3X,4HCOST,6X,F12.4)
  449 WRITE(6,1340) NP(JJ),NPM(I),NZ, NP(JJ),NPM(I),ONE
 1340 FORMAT(2H *,4X,1HW,A2,A2,A2, 3X, 2HIW,A2,1HP,A2,3X,F12.4)
      WRITE(4,1341) NP(JJ),NPM(I),NZ, NP(JJ),NPM(I),ONE
      MCOL=MCOL+1
 1341 FORMAT     (4X,1HW,A2,A2,A2, 3X, 2HIW,A2,1HP,A2,3X,F12.4)
      IA=NINHP+1
      DO 455 K=IA,NPT
C  MAKE SURE THE VECHILE IS USED
      KY=K-NINHP
      NU=NPERYR(K,3)
      DO 451 KK=1,NU
      KT=NPTASK(KY,KK)
      NA=NTSK(KT)
      DO 450 K2=1,NA
      IF(U(J,K2,KT) .NE. 0.0) GO TO 4511
  450 CONTINUE
  451 CONTINUE
      GO TO 455
 4511 IF(SY+LIFER .LE. NPERYR(K,1)) GO TO 460
      IY=NPERYR(K,2)-NPERYR(I,1)+1
      IX=NPERYR(K,2) -SY + 1
      C=-COSTS(IY,2)
      IF(K .EQ. NPT) C=-COSTS(IY,3)
      DO 452 KK=1,IX
      KKK=KK+NAGE
      C= C + COSTS(KKK,1)/VCOST(J,4)**KK
  452 CONTINUE
      WRITE(6,1330) NP(JJ),NPM(I),NP(KY), C
      WRITE(4,1331) NP(JJ),NPM(I),NP(KY), C
      WRITE(6,1340) NP(JJ),NPM(I),NP(KY), NP(JJ),NPM(I), ONE
      WRITE(4,1341) NP(JJ),NPM(I),NP(KY), NP(JJ),NPM(I), ONE
      MCOL=MCOL+1
      C=1.0
      ALPHA=VCOST(J,4)
      LLL3=0
      DO 4521 L3=IA,K
      L4=L3 - NINHP
      C=-C
      WRITE(6,1350) NP(JJ),NPM(I),NP(KY), NP(JJ),NP(L4), C
 1350 FORMAT(2H *,4X,1HW,A2,A2,A2,3X, 1HX,A2,1HP,A2,4X,F12.4)
      WRITE(4,1351) NP(JJ),NPM(I),NP(KY), NP(JJ),NP(L4), C
 1351 FORMAT     (4X,1HW,A2,A2,A2,3X, 1HX,A2,1HP,A2,4X,F12.4)
      LLL3=LLL3 + (NPERYR(L3,2)-NPERYR(L3,1) ) + 1
      C=ALPHA**LLL3
 4521 CONTINUE
  455 CONTINUE
```

```
  460 CONTINUE                                                          10005220
  470 CONTINUE                                                          10005230
C                                                                       10005240
C  GENERATE THE P, X, AND C COLUMNS FOR EACH PERIOD                     10005250
  480 IA=NINHP + 1                                                      10005260
      DO 610 LL=IA,NPT                                                  10005270
C  IF YPINT(LL) .EQ. 1.0 IT IS ASSUMED ALL THE VEHICLES USED ARE        10005280
C  AVALIABLE.  HENCE NO CHECK IS MADE.                                  10005290
      IF (YPINT(LL).EQ. 1.0 ) GO TO 491                                 10005300
      NVP=NPERYP(LL,2)                                                  10005310
C  THE SUBROUTINE YINTERP SETS THE ARRAY ALTER TO INDICATE THE          10005320
C  ALTERNATIVES THAT ARE NOT AVALIABLE FOR USE IN PERIOD LL.            10005330
C  IF ALTER(K,J)=0 THEN ALTERNATIVE J OF TASK K IS NOT AVALIABLE FOR    10005340
C  USE.                                                                 10005350
      CALL YINTERP (NVP,NTP,NVP)                                        10005360
  491 L=LL-NINHP                                                        10005370
      DO 493 J=1,NVP                                                    10005380
C                                                                       10005400
C  GENERATE THE PIIKKLL COLUMNS                                         10005410
  493 NVEHU(J)=1                                                        10005390
      NU=NPERYP(LL,1)                                                   10005420
      DO 520 II=1,NU                                                    10005430
      ID=NPTASK(L,II)                                                   10005440
      NA=NTSK(ID)                                                       10005450
      KA=0                                                              10005460
      DO 510 KK=1,NA                                                    10005470
      IF (YPINT(LL).EQ. 1.0) GO TO 491                                  10005480
      IF (ALTER(KK,ID).EQ. 0) GO TO 510                                 10005490
  491 KA=KA+1                                                           10005500
      DO 500 JJ=1,NVP                                                   10005510
      J=NAMEN(JJ)                                                       10005520
      IF( U(J,KK,ID) .EQ. 0.0) GO TO 500                                10005530
      IF (YAVL(J).GT.NPERYP(LL,2)) GO TO 500                            10005540
      NVEHU(JJ)=2                                                       10005550
      C=PTASK(L,II)*U(J,KK,ID)*YPINT(LL)                                10005560
      WRITE(4,1361) NP(ID),NP(KA),NP(L), NP(JJ),NP(L), C                10005570
 1361 FORMAT      (4X,1HP,3A2,3X, 1HX,A2,1HP,A2, 4X, F12.4)             10005580
      IF (LL.NE.5) GO TO 500                                            10005590
      IF (KA.GT.10) GO TO 500                                           10005600
      WRITE(6,1360) NP(ID),NP(KA),NP(L), NP(JJ),NP(L), C                10005610
 1360 FORMAT(2H *,4X,1HP,3A2,3X, 1HX,A2,1HP,A2, 4X, F12.4)              10005620
  500 CONTINUE                                                          10005630
      WRITE(4,1371) NP(ID),NP(KA),NP(L), NP(ID),NP(L), ONE              10005640
      MCOL=MCOL+1                                                       10005650
 1371 FORMAT      (4X,1HP,3A2, 3X, 1HT,A2,1HP,A2, 4X, F12.4)            10005660
      IF (LL.NE.5) GO TO 510                                            10005670
      IF (KA.GT.10) GO TO 510                                           10005680
      WRITE(6,1370) NP(ID),NP(KA),NP(L), NP(ID),NP(L), ONE              10005690
 1370 FORMAT(2H *,4X,1HP,3A2, 3X, 1HT,A2,1HP,A2, 4X, F12.4)             10005700
  510 CONTINUE                                                          10005710
  520 CONTINUE                                                          10005720
      LENP=NPERYP(LL,2)-NPERYP(LL,1)+1                                  10005730
C                                                                       10005740
C  NOW GENERATE THE XJJLLMM COLUMNS                                     10005750
      DO 570 JJ=1,NVP                                                   10005760
      IS=NVEHU(JJ)                                                      10005770
      GO TO(570,525),IS                                                 10005780
C  IS=2 INDICATES VEHICLE JJ IS USED IN PERIOD L                        10005790
```

```
  525 J=NAMEN(JJ)
      CALL YRCOST(J)
      C=0
      DO 526 IS=1,LENP
  526 C=C + COSTS(IS,1)
      IF(NPERYR(LL,2).EQ. LY) GO TO 528
      C=C - COSTS(LENP,2)
      GO TO 527
  528 C=C - COSTS(LENP,3)
  527 WRITE(4,1391)  NP(JJ),NP(L),NP(L), NP(JJ), ONE
 1391 FORMAT     (4X,1HX,3A2, 3X, 4HSUMX,A2, 4X, F12.4)
      IF (LL.NE.5) GO TO 530
      WRITE(6,1390)  NP(JJ),NP(L),NP(L), NP(JJ), ONE
 1390 FORMAT(2H *,4X,1HX,3A2, 3X, 4HSUMX,A2, 4X, F12.4)
  530 WRITE(4,1401) NP(JJ),NP(L), NP(L), NP(JJ),NP(L), ONEM
 1401 FORMAT     (4X,1HX,3A2, 3X, 1HX,A2,1HP,A2,4X, F12.4)
      IF (LL.NE.5) GO TO 531
      WRITE(6,1400) NP(JJ),NP(L), NP(L), NP(JJ),NP(L), ONEM
 1400 FORMAT(2H *,4X,1HX,3A2, 3X, 1HX,A2,1HP,A2,4X, F12.4)
  531 IF (LL.NE.5) GO TO 529
      WRITE (6,1384) NP(JJ),NP(L),NP(L),NP(L),VCOST( J,5)
 1384 FORMAT (2H *,4X,1HX,3A2,3X,2HPC,A2,6X,F12.4)
      WRITE(6,1380) NP(JJ),NP(L),NP(L), C
 1380 FORMAT(2H *,4X,1HX,3A2, 3X, 4HCOST,6X,F12.4)
  529 WRITE (4,1385) NP(JJ),NP(L),NP(L),NP(L),VCOST( J,5)
 1385 FORMAT      (4X,1HX,3A2,3X,2HPC,A2,6X,F12.4)
      WRITE (4,1381) NP(JJ),NP(L),NP(L),C
      MCOL=MCOL+1
 1381 FORMAT     (4X,1HX,3A2, 3X, 4HCOST,6X,F12.4)
      LP1=LL + 1
      IF (LP1 .GT. NPT) GO TO 570
      DO 545 L1=LP1,NPT
C
C  MAKE SURE VEHICLE JJ IS USED IN PERIOD L1.
      IF( VLIFE(J) .LE. (NPERYR(L1,1) - NPERYR(LL,1)) ) GO TO 545
      NU=NPERYR(L1,3)
      DO 540 II=1,NU
      L2=L1-NINHP
      ID=NPTASK(L,II)
      NA=NTSK(ID)
      DO 535 KK=1,NA
      IF( U(J,KK,ID) .NE. 0.0) GO TO 5411
  535 CONTINUE
  540 CONTINUE
      GO TO 545
 5411 ALPHA=VCOST(J,4)
      C=1.0
      LLL3=0
      DO 5442 L3=LL,L1
      C=-C
      L4=L3-NINHP
      IF (LL.NE.5) GO TO 5443
      WRITE(6,1400) NP(JJ),NP(L),NP(L2), NP(JJ),NP(L4), C
 5443 WRITE(4,1401) NP(JJ),NP(L),NP(L2), NP(JJ),NP(L4), C
      LLL3=LLL3+ (NPERYR(L3,2)-NPERYR(L3,1)) + 1
      C=ALPHA**LLL3
 5442 CONTINUE
      C=0
```

```
      LLL1=NPEPYP(L1,2)-NPEPYP(LL,1) + 1                                10006380
      DO 542 IS=1,LLL1                                                  10006390
  542 C=C + COSTS(IS,1)                                                 10006400
      IF(NPEPYP(L1,2) .EQ. LY) GO TO 543                                10006410
      C=C - COSTS(LLL1,2)                                               10006420
      GO TO 544                                                         10006430
  543 C=C - COSTS(LLL1,3)                                               10006440
  544 WRITE (4,1385) NP(JJ),NP(L),NP(L2),NP(L),VCOST( J,5)              10006450
      WRITE (4,1381) NP(JJ),NP(L),NP(L2),C                              10006460
      MCOL=MCOL+1                                                       10006470
      IF (LL.NE.5) GO TO 5441                                           10006480
      WRITE (6,1384) NP(JJ),NP(L),NP(L2),NP(L),VCOST( J,5)              10006490
      WRITE(6,1380) NP(JJ),NP(L),NP(L2), C                              10006500
 5441 WRITE(4,1391) NP(JJ),NP(L),NP(L2), NP(JJ), ONE                    10006510
      IF (LL.NE.5) GO TO 545                                            10006520
      WRITE(6,1390) NP(JJ),NP(L),NP(L2), NP(JJ), ONE                    10006530
  545 CONTINUE                                                          10006540
C                                                                       10006550
C  NOW GENERATE THE SJJLL COLUMN                                        10006560
C                                                                       10006570
      CALL MOTH(J)                                                      10006580
      WRITE(4,1411) NP(JJ),NP(L), C                                     10006590
 1411 FORMAT      (4X, 1HS,2A2,5X, 4HCOST,6X, F12.4)                    10006600
      MCOL=MCOL+1                                                       10006610
      WRITE (4,1412) NP(JJ),NP(L),NP(JJ),NP(L),ONE                      10006620
 1412 FORMAT (4X,1HS,2A2,5X,1HX,A2,1HP,A2,4X,F12.4)                     10006630
      IF (LL.NE.5) GO TO 570                                            10006640
      WRITE(6,1410) NP(JJ),NP(L), C, NP(JJ),NP(L), ONE                  10006650
 1410 FORMAT(2H *,4X, 1HS,2A2,5X, 4HCOST,6X, F12.4, 3X,1HX,A2,1HP,A2,   10006660
     * 4X,F12.4)                                                        10006670
  570 CONTINUE                                                          10006680
  630 CONTINUE                                                          10006690
C                                                                       10006700
C  NOW GENERATE THE RIGHT-HAND-SIDE ELEMENTS                            10006710
      WRITE(6,1420)                                                     10006720
 1420 FORMAT(2H *,3HRHS)                                                10006730
      WRITE(4,1421)                                                     10006740
      MCOL=MCOL+1                                                       10006750
 1421 FORMAT      (3HRHS)                                               10006760
C                                                                       10006770
C                                                                       10006780
C     GENERATE THE RHS FOR PROCUREMENT CONSTRAINTS                      10006790
C                                                                       10006800
      IA=NPT-NINHP                                                      10006810
      DO 610 I=1,IA                                                     10006820
      IB=I+NINHP                                                        10006830
      WRITE (4,1435) NP(I),BUDG(IB)                                     10006840
 1435 FORMAT       (4X,4HRHS1,6X,2HPC,A2,6X,F12.4)                      10006850
      WRITE (6,1434) NP(I),BUDG(IB)                                     10006860
 1434 FORMAT (2H *,4X,4HRHS1,6X,2HPC,A2,6X,F12.4)                       10006870
  610 CONTINUE                                                          10006880
C                                                                       10006890
C  GENERATE THE RHS FOR INHERITED FLEET ROWS                            10006900
  615 IF(NIV .EQ. 0) GO TO 650                                          10006910
      DO 640 II=1,NIV                                                   10006920
      JJ=THVN(II)                                                       10006930
      J=NAMEN(JJ)                                                       10006940
      DO 630 I=1,NINHP                                                  10006950
```

```
      IF(YAVL(J) .GT. NPERYR(I,2)) GO TO 630                            10006960
      ISUM=0                                                            10006970
      IA=MAX0(YAVL(J),NPERYR(I,1)) - YAVL(J) + 1                        10006980
      IB=NPERYR(I,2) - YAVL(J) + 1                                      10006990
      DO 620 K=IA,IB                                                    10007000
  620 ISUM=ISUM + INH(J,K)                                              10007010
      IF(ISUM .EQ. 0) GO TO 630                                         10007020
      C=FLOAT(ISUM)                                                     10007030
      WRITE(6,1440) NP(JJ), NPM(I), C                                   10007040
 1440 FORMAT(2H *,4X, 4HPHS1,6X, 2HIW,A2,1HP,A2,3X, F12.4)              10007050
      WRITE(4,1441) NP(JJ), NPM(I), C                                   10007060
 1441 FORMAT      (4X, 4HPHS1,6X, 2HIW,A2,1HP,A2,3X, F12.4)             10007070
  630 CONTINUE                                                          10007080
  640 CONTINUE                                                          10007090
C                                                                       10007100
C NOW GENERATE THE RHS FOR THE TASK ROWS                                10007110
  650 IA=NINHP+1                                                        10007120
      DO 700 LL=IA,NPT                                                  10007130
      L=LL-NINHP                                                        10007140
      NU=NPERYR(LL,3)                                                   10007150
      DO 690 K=1,NU                                                     10007160
      KT=NPTASK(L,K)                                                    10007170
      WRITE(6,1450) NP(KT), NP(L), ONE                                  10007180
 1450 FORMAT(2H *,4X, 4HRHS1,6X, 1HT,A2,1HP,A2,4X,F12.4)                10007190
      WRITE(4,1451) NP(KT), NP(L), ONE                                  10007200
 1451 FORMAT      (4X, 4HRHS1,6X, 1HT,A2,1HP,A2,4X,F12.4)               10007210
  690 CONTINUE                                                          10007220
  700 CONTINUE                                                          10007230
      WRITE(6,1460)                                                     10007240
 1460 FORMAT(2H *,  6HENDATA)                                           10007250
      WRITE(4,1461)                                                     10007260
 1461 FORMAT      (  6HENDATA)                                          10007270
      END FILE 4                                                        10007280
       CALL MATFILL(NROW,MCOL,UB,NVR)                                   10007290
      WRITE (6,3000) NROW,MCOL,(UB(I),I=1,NVR)                          10007300
 3000 FORMAT (*0 IMPORTANT DATA ITEMS FOR INPUT TO BRCAVLP * /          10007310
     A * NUMBER OF ROWS (INCLUDING COST) IS *,I4 /                      10007320
     B * NUMBER OF COLUMNS (INCLUDING RHS) IS *,I7 /                    10007330
     C * UPPER BOUNDS FOR VEHICLES IN ORDER FROM X1 THRU XN ARE */      10007340
     D (1H ,10X,F12.4))                                                 10007350
C                                                                       10007360
C   PRODUCE OUTPUT LISTING FOR DOCUMENTATION OF RUN                     10007370
C                                                                       10007380
       WRITE (6,2010)                                                   10007390
       WRITE (6,2020)                                                   10007400
 2010 FORMAT (*1     VEHICLE   VARIABLE  PURCHASE    O AND M     R AND D 10007410
     *    RETENTION   YEAR FIRST  LIFE IN*)                             10007420
 2020 FORMAT (*      NAME      NAME      COST        COST        COST   10007430
     *    RATE        AVAILABLE   YEARS*)                               10007440
      IY=SY                                                             10007450
C                                                                       10007460
C   LIST VEHICLE VARIABLE NAME, AND COST DATA                           10007470
C                                                                       10007480
      DO 800 I=1,NVR                                                    10007490
      II=NAMEN(I)                                                       10007500
      WRITE (6,2030) VNAME(II),NP(I),(VCOST(II,J),J=1,4),YAVL(II),      10007510
     *VLIFE(II)                                                         10007520
 2030 FORMAT (1H0,4X,A8,7X,1HX,A2,4(F8.4,4X),2X,I4,8X,I2)               10007530
```

```
      IF (YAVL(II).LT.IY) IY=YAVL(II)
  830 CONTINUE
C
C     DESCRIBE THE INHERITED FLEET
C
      IF (IY.EQ.SY) GO TO 821
      WRITE (6,2040)
 2040 FORMAT (*-     COMPONENTS OF THE INHERITED FLEET*)
      IF ((SY-IY).GT.20) IY=SY-20
      DO 810 I=IY,SY
      II=I-IY+1
  810 YEAR(II)=I
      INHYRS=SY-IY
      WRITE (6,2050) (YEAR(I),I=1,INHYRS)
 2050 FORMAT (1H0,20X,20(I5))
      NA=NVR-NTV+1
      DO 820 I= 1,NVR
      J=NAMEN(I)
      IF(YAVL(J).GE.SY) GO TO 820
      KK=YAVL(J)-IY
      DO 815 K=1,INHYRS
      IF (KK.LT.K) GO TO 814
      YEAR(K)=0
      GO TO 815
  814 K1=K-KK
      YEAR(K)=INH(J,K1)
  815 CONTINUE
      WRITE (6,2060) NR(I),(YEAR(K),K=1,INHYRS)
 2060 FORMAT (15H     NUMBER OF X,A2,4X,20(I5))
  820 CONTINUE
C
C     FOR EACH PERIOD , LIST ALL OF THE APPLICABLE TASK MATRICES
C
  821 IA=NTNHR+1
      DO 850 I=IA,NPT
      WRITE (6,2070) NPERYR(I,1),NPERYR(I,2)
 2070 FORMAT  (35H-     TASKS REQUIRED IN PERIOD FROM ,I4,9H THROUGH ,I4)
      M=NPERYR(I,3)
      DO 845 J=1,M
      IM=I-NTNHR
      JJ=NPTASK(IM,J)
      WRITE (6,2080) NR(JJ), RTASK(IM,J),  YRINT(I)
 2080 FORMAT (1H0,6X,*TASK *,A2,*  -  PERFORMED BY *,F5.2,* FORCE ELEMEN
     *T(S), WITH SCALE FACTOR EQUAL *,F5.3)
      TT=0
      IF (YRINT(I).NE. 1.0) GO TO 845
      WRITE (6,2090)
 2090 FORMAT (1H ,6X,1H*)
C
C     DETERMINE WHICH VEHICLES ARE USED IN EACH TASK , JJ.....
C
C           (I=PERIOD, K=VEHICLE, II=NUMBER OF VEHICLES USED,
C           KK=NUMBER OF ALTERNATIVES)
C
      KK=NTSK(JJ)
      DO 830 K=1,NVR
      N=NAMEN(K)
      DO 829 L=1,KK
```

```
      IF (U(N,L,JJ).EQ.0) GO TO 829
      II=II+1
      NL(II)=NP(K)
      NN(II)=N
      NAMES(II)=K
      GO TO 830
  829 CONTINUE
  830 CONTINUE
      WRITE (6,2100) (NL(K),K=1,II)
 2100 FORMAT (1H ,7X,11H* VARIABLE ,10(3X,1HX,A2))
      WRITE (6,2110)
 2110 FORMAT (1H ,8X,9H*********)
      WRITE (6,2120)
 2120 FORMAT (1H ,6X,11HALTERNATIVE)
C
C     FILL IN TASK MATRIX
C
      DO 844 L=1,KK
      DO 840 K=1,II
      N=NN(K)
      GO TO (831,832,833,834,835,836,837,838,839),K
  831 WRITE (6,2131) L,U(N,L,JJ)
 2131 FORMAT (1H ,15X,I2,2X,F5.0)
      GO TO 840
  832 WRITE (6,2132) U(N,L,JJ)
 2132 FORMAT (1H+,25X,F5.0)
      GO TO 840
  833 WRITE (6,2133) U(N,L,JJ)
 2133 FORMAT (1H+,31X,F5.0)
      GO TO 840
  834 WRITE (6,2134) U(N,L,JJ)
 2134 FORMAT (1H+,37X,F5.0)
      GO TO 840
  835 WRITE (6,2135) U(N,L,JJ)
 2135 FORMAT (1H+,43X,F5.0)
      GO TO 840
  836 WRITE (6,2136) U(N,L,JJ)
 2136 FORMAT (1H+,49X,F5.0)
      GO TO 840
  837 WRITE (6,2137) U(N,L,JJ)
 2137 FORMAT (1H+,55X,F5.0)
      GO TO 840
  838 WRITE (6,2138) U(N,L,JJ)
 2138 FORMAT (1H+,61X,F5.0)
      GO TO 840
  839 WRITE (6,2139) U(N,L,JJ)
 2139 FORMAT (1H+,67X,F5.0)
  840 CONTINUE
  844 CONTINUE
  845 CONTINUE
  850 CONTINUE
      STOP
      END
```

```
      SUBROUTINE MATFILL(N,M,UB,NVR)
      DIMENSION RVAL(120),RNAME(120)
      DIMENSION IROWTP(100)
      DIMENSION UB(1)
      DATA IT,II / 1HT,1HI /
      DATA C / 7HCOLUMNS /,R / 3HRHS  /
      I=0
      J=0
      DO 400 K=1,100
  400 IROWTP(K)=0
      REWIND 4
      WRITE(9,7000) M,N,(UB(I),I=1,NVR)
 7000 FORMAT(2I5/(6F12.4))
      READ (4,4000) DUM1,DUM2
      IF (EOF,4) 120,1
    1 WRITE(9,4000) DUM1,DUM2
 4000 FORMAT (A4,10X,A8)
      READ (4,4100) DUM3
 4100 FORMAT (A4)
      DO 10 I=1,N
      READ (4,4200) RNAME(I)
 4200 FORMAT (4X,A7)
      ENCODE(1,9000,ITEMP) RNAME(I)
      IF(ITEMP.EQ.IT.OR.ITEMP.EQ.II) IROWTP(I)=4
 9000 FORMAT(A1)
      IF (EOF,4) 120,10
   10 CONTINUE
      READ (4,4300)  DUM4
 4300 FORMAT (A7)
      IF (DUM4.EQ.C)GO TO 20
      WRITE  (6,4400) DUM4
 4400 FORMAT(* INCORRECTLY READ FILE----COLUMNS READ AS *,A7)
      RETURN
   20 READ (4,4500) CNAME,RTEMP,VAL
 4500 FORMAT (4X,A7,3X,A7,3X,F12.4)
      WRITE (6,5000)
 5000 FORMAT (*1 REFERENCE LIST FOR COLUMN NUMBERS AND NAMES*)
      WRITE(6,6100) (IROWTP(K),K=1,N)
      WRITE(9,6000) (IROWTP(K),K=1,N)
 6000 FORMAT(I12)
 6100 FORMAT(1H ,100I1)
      L=1
      DO 100 J=1,M
      GO TO (21,22,23,24,25),L
   21 WRITE (6,5100) J,CNAME
 5100 FORMAT (1H ,4X,I5,4X,A7)
      GO TO 26
   22 WRITE (6,5200) J,CNAME
 5200 FORMAT (1H+,24X,I5,4X,A7)
      GO TO 26
   23 WRITE (6,5300) J,CNAME
 5300 FORMAT (1H+,44X,I5,4X,A7)
      GO TO 26
   24 WRITE (6,5400) J,CNAME
 5400 FORMAT (1H+,64X,I5,4X,A7)
      GO TO 26
   25 WRITE (6,5500) J,CNAME
```

Reproduced from best available copy.

```
5500 FORMAT (1H+,84X,I5,4X,A7)
  26 L=L+1
     IF(L.GT.5)L=1
     WRITE(7,5700) J,CNAME
5700 FORMAT(I5,4X,A7)
     DO 30 I=1,N
  30 RVAL(I)=0.0
  40 DO 50 I=1,N
     IF (RTEMP.NE.RNAME(I)) GO TO 50
     RVAL(I)=VAL
     GO TO 60
  50 CONTINUE
  60 IF (J.NE.(M-1)) GO TO 80
     IF (I.NE.N) GO TO 80
     READ (4,4600) DUM5
4600 FORMAT (A3)
     IF (EOF,4) 120,70
  70 IF (DUM5.EQ.R) GO TO 80
     WRITE (6,4700) CNAME
4700 FORMAT(* THE M-1 COLUMN WAS *,A7,* ,UNABLE TO FIND RHS MARK*)
     RETURN
  80 READ (4,4500) CTEMP,RTEMP,VAL
     IF (EOF,4) 120,90
  90 IF (CTEMP.EQ.CNAME) GO TO 40
     CNAME=CTEMP
     WRITE (9,4800) (RVAL(K),K=1,N)
4800 FORMAT (F12.4)
 100 CONTINUE
     END FILE 9
     END FILE 7
     RETURN
 120 WRITE (6,4900) J,I
4900 FORMAT(* REACHED EOF WHILE WRITING COLUMN *,I7,* AND ROW *,I4)
     RETURN
     END
```

```
      SUBROUTINE YRCOST(J)
C  A SUBROUTINE TO COMPUTE THE OPERATING, SALVAGE, AND TRUNCATION
C  COSTS YEAR BY YEAR.  ALSO THE YEARLY MOTHBALLING SAVING IS COMPUTED.
      COMMON /VECSTG/ VNAME(10), C,LENP, VLIFE(10), INH(10,16),
     * VCOST(10,5), NAMEN(10), COSTS(30,3)
      INTEGER VNAME,VLIFE
C  ASSUME THE OPERATING AND MAINTANCE COST INCREASES AT R*100 PER-CENT
C  A YEAR (NOT A COMPOUND RATE INCREASE)
      R=0.0
C
C  LET X= THE 1ST YEAR O. AND M. COST.  THEN
C                                X+(1+R)*X+(+2*R)*X+...+(1+9*R)*X=VCOST(J,2)
      X= VCOST(J,2)/(10.0 + 45.0*R)
C  ASSUME NO PERIOD IS LONGER THAN 5 YEARS.
      I9=VLIFE(J) +10
      DO 10 I=1,I9
      COSTS(I,1)=(1.0 + FLOAT(I-1)*R)*X*(VCOST(J,4)**(I-1))
   10 CONTINUE
C
C  ASSUME THE SALVAGE VALUE OF A VEHICLE AFTER I YEARS OF SERVICE IS
C  (ALPHA)**I *PURCHASE COST.
      ALPHA=0.5
      Y=VCOST(J,1)
      DO 20 I=1,I9
      Y= ALPHA*Y
      COSTS(I,2)=Y
   20 CONTINUE
C
C         ASSUME TRUNCATION AFTER IYEARS OF SERVICE IS
C               (VLIFE-I)*(PURCHASE COST)/VLIFE
C
      Y=VCOST(J,1)/VLIFE(J)
      DO 30 I=1,I9
      IX=VLIFE(J)-I
      IF (IX.LT.0) IX=0
      COSTS(I,3)=IX*Y
   30 CONTINUE
      RETURN
      ENTRY MOTH
C  ASSSUME THE MOTHBALLING SAVING IS R1*100 PER CENT OF THE FIRST YEAR COST-X
      R1=0.90
C     C=0
C     DO 546 IL=1,LENP
C 545 C=C-0.1*R1*VCOST(J,2)*VCOST(J,4)**(IL-1)
C     C =-X * R1
      C=-VCOST(J,2)/(10.0 + 45.0*R) * R1
      RETURN
      END
```

```
      SUBROUTINE YINTERP (NVR,NTR,NYR)
      COMMON /TSKSTG/ U(7,288,9) ,NTSK( 9)
      COMMON / ALTSTG / ALTER(288,9),YAVL(10)
      INTEGER ALTER
      INTEGER JSUB(10),YAVL
      DO 20 I=1,NTR
      N=NTSK(I)
      DO 10 J=1,N
   10 ALTER(J,I)=1
   20 CONTINUE
      DO 30 I=1,NVR
      IF (YAVL(I).LE.NYR) GO TO 30
      IVR=I
      GO TO 40
   30 CONTINUE
      RETURN
   40 L=0
      DO 50 J=IVR,NVR
      IF (YAVL(J).LE.NYR) GO TO 50
      L=L+1
      JSUB(L)=J
   50 CONTINUE
C
C  THE SET OF VEHICLES WHICH WILL NOT EXIST IN YEAR NYR
C     HAS BEEN DEFINED ---- NOW WE WILL ORDER THE SET
C     IN THE REVERSE OF THE ORDER IN WHICH THEY WILL
C     BE DEVELOPED......
C
      DO 70 I=1,L
      N=I
      K=JSUB(I)
      DO 60 J=N,L
      M=JSUB(J)
      IF (YAVL(M).LE.YAVL(K)) GO TO 60
      JSUB(J)=K
      JSUB(I)=M
      K=M
   60 CONTINUE
   70 CONTINUE
C
C  FOR EACH TASK, WE WILL DEFINE THE SET OF ALTERNATIVES
C     WHERE THE #NON-EXISTENT# VEHICLES ARE DOING ONLY
C     THOSE TASKS WHICH ARE THEIR PRIMARY RESPONSIBILITY,
C     THAT IS, WHERE THE REQUIREMENT FOR THEM IS A MINIMUM.....
C
      DO 150 I=1,NTR
      N=NTSK(I)
      DO 140 JJ=1,L
      J=JSUB(JJ)
      VMIN=9999.
      DO 100 K=1,N
      IF (ALTER(K,I).EQ.0) GO TO 100
      IF (U(J,K,I).LT.VMIN) VMIN=U(J,K,I)
  100 CONTINUE
      DO 130 K=1,N
      IF (ALTER(K,I).EQ.0) GO TO 130
      IF (U(J,K,I).EQ.VMIN) GO TO 130
```

```
      ALTFP(K,T)=0                                                      10010610
  130 CONTINUE                                                          10010620
  140 CONTINUE                                                          10010630
  150 CONTINUE                                                          10010640
      RETURN                                                            10010650
      END                                                               10010660
```

```
      PROGRAM 88CAV2(INPUT,OUTPUT,TAPE4,TAPE1,TAPE2,
     1 TAPE3,TAPE7,TAPE8,TAPE5=INPUT,TAPE6=OUTPUT,
     2 TAPE9=TAPE4)
C
C  LABELLED  COMMON
      COMMON / CV1 / IP(12),RP(12),TMP(10)
      COMMON / CV2 / T(100,10),BO(100),BLO(10),ULO(10),CO(10)
      COMMON / CV3 / M,N,NCF,PHIT,UZ,USP,USM,EKO,MPLUS
      COMMON / CV4 / IX(110),X(110),IXZ(110),XZ(110),XCON(10),COST
      COMMON / CV5 / SIGMA(100,4),TSIG ,LSTMAX
      COMMON / CV7 / NPHASE,NF1,CFX,IOPT,NOP,NOPS,NEWXZ
      COMMON / CV8 / NXBK,XK,NOBOL,EKBL(25)
      COMMON / CV9 / PSIGL(25),NXBL(25),XNXBL(25),BLIST(25,131)
       COMMON/TMX/TMO,EXT,TITLE(4)
C
       INTEGER UB,CI,BV
       DIMENSION TSTO(130),LSTFRE(25)
       DIMENSION BLT(10),ULT(10),CT(10)
C
C
    7 READ(5,4448)(TITLE(I),I=1,4)
      IF(EOF,5)1,2
    1 END FILE 8
      STOP0003
    2 CALL PARAMS
      RP(12)=0.0
      IP(9)=25
      NFREF=0
       CT = 4
       UB = 3
       LB = 2
       BV = 1
       MNC =(-1)* NCF
       MNX = (-1)* N
       EPSI = RP(1)
       NORA = IP(2)
      MPLUS=NORA+NCF
       NOPS = 1
       NCF4 = NCF * 3 + NORA
C
      CALL READIN
       CALL BOX1
C
C  SOLVE 1ST LP-PROBLEM
C
   55  CONTINUE
       US = USP
       IF(UZ .LT. 0.0) US = USM
      IF (NOP.GE.IP(12)) GO TO 4444
      LSTMAX=MAX0(LSTMAX,NOBOL)
      PMIN=1.E20
      DO 3000 I=1,NOBOL
      IF(PSIGL(I).GE.PMIN) GO TO 3000
      PMIN=PSIGL(I)
      NMIN=I
 3000 CONTINUE
      IF(PMIN.LT.US) GO TO 3020
```

```
      WRITE(6,3010)
 3010 FORMAT(1H-,14HPROBLEM SOLVED)
      GO TO 4446
 3020 PSIGL(NMIN)=1.E20
      NEREF=NEREF+1
      LSTERF(NEREF)=NMIN
      NXBK=NXBL(NMIN)
      EKO=EKBL(NMIN)
      XK=XNXBL(NMIN)
      DO 3030 J=1,NCF
      J1=NOPA+J
      J2=NCF+J1
      J3=NCF+J2
      BLO(J)=BLIST(NMIN,J1)
      ULO(J)=BLIST(NMIN,J2)
 3030  CO(J)=BLIST(NMIN,J3)
      DO 3040 J=1,NOPA
 3040  BO(J)=BLIST(NMIN,J)
      INDTC=1
       BBK = BLO(NXBK)
       UBK = ULO(NXBK)
C
C
       DO 10 I = 1,NCF
       TMP(I) = 0.0
       BLT(I) = 0.0
       ULT(I) = 0.0
       CT(I) = 0.0
   10  CONTINUE
       DO 30 I = 1,NCF4
C
C  REDEFINE SIGMA FOR 1ST-LP-RB FROM KO-DATA
C
   30  TSTO(I) = 0.0
      NMIN=NOPA-1
      DO 552 I=1,NMIN
  552  SIGMA(I,BV) = BO(I)
       DO 553 I = 1, NCF
       SIGMA(I,LB) = BLO(I)
       SIGMA(I,UB) = ULO(I)
       SIGMA(I,CI) = CO(I)
  553  CONTINUE
       XKSTO = XK
C                                        SET  X(K) = Y(K)
       XK = XK - BBK
C                                        SET UPPER BOUND = Y(K)
       SIGMA(NXBK,UB) = XK
       TSIG =EKO
      SIGMA(NOPA,BV)=-TSIG
      BO(NOPA)=-TSIG
C
       BLT(NXBK)= SIGMA(NXBK,LB)
       ULT(NXBK)=XK + BLT(NXBK)
C                                        SLOPE OF X(NXBK) (0 TO XK)
C                                        SHIFTED RIGHT BY BLT(NXBK)
      BLO(NXBK)=BLT(NXBK)
      ULO(NXBK)=XK
       CALL GETC (NXBK,BLT,ULT,CT)
```

Reproduced from best available copy.

```
      SIGMA(NXBK,CI) = CT(NXBK)
      CO(NXBK)=CT(NXBK)
       NOP = NOP + 1
C                                          SOLVE K PRIME LP PROBLEM
      DO 5555 IND=1,MPLUS
      X(IND)=0
 5555 IX(IND)=0
      CALL TABOUT (1)
      NCF1=NCF
      NF1=0
      CALL LP (NOPA,N,NCF1)
      CALL TABOUT (2)
       CALL TIMEC
       COST1 = COST
       IF(NF1 .NE. 1)GO TO 90
   57  CONTINUE
      DO 6665 J=1,NCF
      TMP(J)=0
 6665 XCON(J)=0
      DO 6666 IND=1,MPLUS
      IF (IX(IND).GT.NCF .OR. IX(IND).EQ.0) GO TO 6666
      ICOL=IX(IND)
      TMP(ICOL)=X(IND)
      X(IND)=X(IND)+BLO(ICOL)
      XCON(ICOL)=X(IND)
C                                          DEFINE X(K) FROM Y(K)
 6666 CONTINUE
      IND=0
      DO 6677 J=1,NCF
      IF (BLO(J).EQ. 0.0) GO TO 6677
      IF (XCON(J).GT.0.0) GO TO 6677
      XCON(J)=BLO(J)
      IX(MPLUS-IND)=J
       X(MPLUS-IND)=BLO(J)
      IND=IND+1
 6677 CONTINUE
      RP(12)=COST-TSIG
      DO 6667 J=1,NCF
 6667 RP(12)=RP(12)-TMP(J)*CO(J)
       NOPS = NOPS + 1
       MNY = (-N)
       CALL TIMEC
C                                          EVALUATE OBJECTIVE F(X)
      CALL GETPHI (MNC,XCON,TMP,PHIT)
       CALL TIMEC
C
       WRITE(6,573) PHIT
  573 FORMAT(1H0,11HPHI(XADJ) =,1PE18.7)
      IF (TP(11).EQ.1)
     *WRITE (6,575) (IX(I),X(I),I=1,MPLUS)
  575 FORMAT (1H0,5(7H   COL ,I4,2H =,F12.4))
C
C
       IF(PHIT .GE. UZ)GO TO 70
C  PHIT .LT. UZ FOR 1ST-PROBLEM
C
       UZ = PHIT
      DO 58 I=1,MPLUS
```

```
      IX2(I)=IX(I)
   58  X7(I)    = X(I)
      NEWX7=1
       USP = (UZ/(1.0 + EPSI))
       USM = (UZ/(1.0 - EPSI))
       US = USP
       IF(UZ .LT. 0.0)US = USM
   70  CONTINUE
       IF(COST1 .GE. US)GO TO 90
       CALL NXBRN(XCON, SIGMA, NXB)
 1990 IF(NEREF.LE.0) GO TO 2000
      NOL=LSTERF(NEREF)
      NEREF=NEREF-1
      GO TO 2010
 2000 NOBOL=NOBOL+1
      NOL=NOBOL
      IF(NOBOL.LE.IP(9)) GO TO 2010
      WRITE(6,2020)
 2020 FORMAT(1H-,*BLIST SIZE EXCEEDED*)
      GO TO 4446
 2010 BSIGL(NOL)=COST
      NXBL(NOL)=NXB
      FXBL(NOL)=TSTG
      XNXBL(NOL)=XCON(NXB)
      DO 2030 J=1,NCF
      J1=NOBA+J
      J2=NCF+J1
      J3=NCF+J2
      BLIST(NOL,J1)=SIGMA(J,LB)
      BLIST(NOL,J2)=SIGMA(J,UB)
 2030 BLIST(NOL,J3)=SIGMA(J,CT)
      DO 2040 J=1,NOBA
 2040 BLIST(NOL,J )=SIGMA(J,BV)
      IF(INDIC.EQ.2) GO TO 55
   90  CONTINUE
      INDIC=2
       DO 91 I = 1,NCF
       BLT(I) = 0.0
       ULT(I) = 0.0
       CT(I) = 0.0
       TMP(I) = 0.0
   91  CONTINUE
C
C  REDEFINE SIGMA FOR 2ND-LP-PB FROM KD-DATA
C
      DO  95 I=1,NMIN
       SIGMA(I,BV) = BO(I)
       SIGMA(I,BV) = SIGMA(I,BV)- ( T(I,NXBK)*YK)
      BO(I)=SIGMA(I,BV)
   95  CONTINUE
       DO 96 I = 1,NCF
       SIGMA(I,LB) = BLO(I)
       SIGMA(I,UB) = ULO(I)
       SIGMA(I,CT) = CO(I)
C                                    DEFINE LOWER BOUND OF X(K)
C                                    IF BBK = 0
   96  CONTINUE
C                                    SET UPPER BOUND OF Y(K).
```

Reproduced from best available copy.

SUBROUTINE READIN

```
C                                       THIS IS THE ONLY BOUND FOR
C                                       THIS VARIABLE SENT TO THE LP CODE
      BBK2 = BBK + XK
      UBK2 = UBK-XK
      SIGMA(NXBK,UB) = UBK2
      SIGMA(NXBK,LB) = BBK2
      BLT(NXBK) = BBK
      CALL GETPHI(NXBK,BLT,TMP,DMY)
      PH1 = TMP(NXBK)
      BLT(NXBK) = BBK2
      CALL GETPHI(NXBK,BLT,TMP,DMY)
      PH2 = TMP(NXBK)
      IP2 = 0
      TSIG = EK0  - PH1 + PH2
     SIGMA(NORA,BV)=-TSIG
     BO(NORA)=-TSIG
      BLT(NXBK) = BBK2
      ULT(NXBK) = BBK2 + UBK2
C                                       SET SLOPE OF X(K), IF BBK = 0
     BLO(NXBK)=BLT(NXBK)
     ULO(NXBK)=UBK2
      CALL GETC (NXBK,BLT,ULT,CT)
      SIGMA(NXBK,CI) = CT(NXBK)
     CO(NXBK)=CT(NXBK)
      NOP = NOP + 1
C                                       SOLVE K DOUBLE PRIME LP PROBLEM
     DO 7777 IND=1,MPLUS
     X(IND)=0
 7777 IX(IND)=0
     CALL TABOUT (1)
     NCF1=NCF
     NF1=0
     CALL LP (NORA,N,NCF1)
     CALL TABOUT (2)
      COST2 = COST
      IF(NF1 .NE. 1)GO TO 55
  104  CONTINUE
      NOPS = NOPS + 1
     DO 8887 J=1,NCF
     TMP(J)=0
 8887 XCON(J)=0
     DO 8888 IND=1,MPLUS
     IF (IX(IND).GT.NCF .OR. IX(IND).EQ.0) GO TO 8888
     ICOL=IX(IND)
     TMP(ICOL)=X(IND)
     X(IND)=X(IND)+BLO(ICOL)
     XCON(ICOL)=X(IND)
 8888 CONTINUE
     IND=0
     DO 8899 J=1,NCF
     IF (BLO(J).EQ. 0.0) GO TO 8899
     IF (XCON(J).GT.0.0) GO TO 8899
     XCON(J)=BLO(J)
     IX(MPLUS-IND)=J
      X(MPLUS-IND)=BLO(J)
     IND=IND+1
 8899 CONTINUE
     RP(12)=COST-TSIG
```

```
      DO 8889 J=1,NCF
 8889 PP(12)=PP(12)-TMP(J)*CO(J)
      CALL GETPHI (MNC,XCON,TMP,PHIT)
C
       WRITE(6,573) PHIT
      IF (IP(11).EQ.1)
     *WRITE (6,575) (IX(I),X(I),I=1,MPLUS)
C
       IF(PHIT .GE. UZ)GO TO 109
       UZ = PHIT
      DO 107 I=1,MPLUS
      IX7(I)=IX(I)
  107  X7(I)     =    X(I)
      NEWX7=1
       USP = ( UZ /(1.0 + EPST))
       USM = ( UZ /(1.0 - EPST))
       US = USP
       IF(UZ .LT. 0.0)US = USM
  109  CONTINUE
      IF(COST2.GE.US) GO TO 55
       CALL NXPRN(XCON, SIGMA, NXP)
      GO TO 1990
 4444 WRITE (6,4445)
 4445 FORMAT (* HAVE SOLVED MAX. NO. OF L2 PROBS. SET BY IP(12)*)
 4446 WRITE(8,4448)(TITLE(I),I=1,4)
 4448 FORMAT(4A10)
      WRITE(8,4447)(IX7(I),X7(I),I=1,MPLUS)
 4447 FORMAT(I4,4X,F12.4)
      WRITE(8,4447)MNC,UZ
      NEWXZ=1
      CALL TABOUT (3)
      GO TO 7
   26  CALL EXIT
       END
```

```
      SUBROUTINE BOX1
C
C  LABELLED  COMMON
      COMMON / CV1 / IP(12),RP(12),TMP(10)
      COMMON / CV2 / T(100,10),BO(100),BLO(10),ULO(10),CO(10)
      COMMON / CV3 / M,N,NCF,PHIT,UZ,USP,USM,EKO,MPLUS
      COMMON / CV4 / IX(110),X(110),IXZ(110),XZ(110),XCON(10),COST
      COMMON / CV5 / STGMA(100,4),TSIG ,LSTMAX
      COMMON / CV7 / NPHASE,NF1,CFX,IOPT,NOP,NOPS,NEWXZ
      COMMON / CV8 / NXBK,XK,NOBOL,EKBL(25)
      COMMON / CV9 / PSIGL(25),NXBL(25),XNXBL(25),BLTST(25,131)
C
C
      INTEGER UB,CI,BV
C
C  BOX NO. 1  (NOP = 1)
C
       CT = 4
      UB = 3
      LB = 2
      BV = 1
      NORA = IP(2)
      MNC =(-1)* NCF
      MNX = (-1)* N
      CALL GETC (MNC,BLO,ULO,CO)
      CALL INITA (NCF,N,NORA)
      CALL GETPHI(MNC,BLO,TMP,ESIG)
      EKO = ESIG
C  SET ISIGMA FOR 1ST LP PROB.
      DO 10 I = 1,NCF
      TMP(I) = 0.0
       SIGMA(I,LB)=BLO(I)
      SIGMA(I,UB)=ULO(I)
      SIGMA(I,CI)=CO(I)
   10 CONTINUE
      DO 15 I = 1,NORA
      SIGMA(I,BV)= BO(I)
   15 CONTINUE
      TSIG = EKO
C
      NOP = 1
      DO 5555 IND=1,MPLUS
      XZ(IND)=0
      IXZ(IND)=0
      X(IND)=0
 5555 IX(IND)=0
      CALL TABOUT (1)
      NCF1=NCF
      NF1=0
      CALL LP (NORA,N,NCF1)
      CALL TABOUT (2)
       IF(NF1 .NE. 1)GO TO 7
   28 CONTINUE
      DO 31 J=1,NCF
   31 XCON(J)=0
      DO 6666 IND=1,MPLUS
      IF (IX(IND).GT.NCF .OR. IX(IND).EQ.J) GO TO 6666
```

```
      ICOL=IX(IND)                                                      20003810
      X(IND)=X(IND)+BLO(ICOL)                                           20003820
      XCON(ICOL)=X(IND)                                                 20003830
 6666 CONTINUE                                                          20003840
      DO 30 J=1,MPLUS                                                   20003850
      IXZ(J)=IX(J)                                                      20003860
       XZ(J)  = X(J)                                                    20003870
   30  CONTINUE                                                         20003880
      NEWXZ=1                                                           20003890
      RP(12)=COST                                                       20003900
      DO 6667 J=1,NCE                                                   20003910
 6667 RP(12)=RP(12)-XCON(J)*CO(J)                                       20003920
      CALL GETPHI (MNC,XCON,TMP,UZ)                                     20003930
       EPSI = RP(1)                                                     20003940
       USP= (UZ /(1.0 + EPSI))                                          20003950
       USM= (UZ /(1.0 - EPSI))                                          20003960
       EKO = TSIG                                                       20003970
C                                                                       20003980
C   10  SEP  68                                                         20003990
      CALL NXBRN (XCON,SIGMA,NXB)                                       20004000
      LSTMAX=1                                                          20004010
      NOBOL=1                                                           20004020
      BSIGL(1)=COST                                                     20004030
      XK=XCON(NXB)                                                      20004040
      XNXBL(1)=XCON(NXB)                                                20004050
      NXBL(1)=NXB                                                       20004060
      EKBL(1)=TSIG                                                      20004070
   50  CONTINUE                                                         20004080
       DO 52 I = 1,NCE                                                  20004090
       BLO(I)  = SIGMA(I,LB)                                            20004100
       CO(I)   = SIGMA(I,CI)                                            20004110
       ULO(I)  = SIGMA(I,UB)                                            20004120
      I1=NOBA+I                                                         20004130
      I2=NCE+I1                                                         20004140
      I3=NCE+I2                                                         20004150
      BLIST(1,I1)=BLO(I)                                                20004160
      BLIST(1,I2)=ULO(I)                                                20004170
      BLIST(1,I3)=CO(I)                                                 20004180
   52  CONTINUE                                                         20004190
       DO 53 I = 1,NOBA                                                 20004200
       BO(I)   = SIGMA(I,BV)                                            20004210
      BLIST(1,I )=BO(I)                                                 20004220
   53  CONTINUE                                                         20004230
  777  RETURN                                                           20004240
    7 CALL BBCAV2                                                       20004250
       END                                                              20004260
```

```
      SUBROUTINE GETASQ(NOES,ELM,JSQ)
C...SHELL METHOD OF HALVING
C
C  GETASQ(NOES,ELM,JSQ)  SORTS ELM(J),J=1,NOES IN AN ASCENDING SEQUENCE
C  PRESET INITIAL POSITION CODE OF ELM(J)
C  JSQ(J) PRESET TO (-1) WHEN ELM(J) IS UNDEFINED (I.E. INFINITE)
C
      DIMENSION ELM(1), JSQ(1)
      L = 1
    7 L = 2 * L
      IF( L.LE. NOES) GO TO 7
      L = L - 1
   10 L = L / 2
      DO 20 K2 = 1, NOES
      K1 = K2
   15 K3 = K1 + L
      IF( K3 .GT. NOES) GO TO 30
      IF( ELM(K1).LE. ELM(K3) ) GO TO 20
      RT = ELM(K1)
      ELM(K1 ) = ELM(K3)
      ELM(K3) = RT
      RT = JSQ(K1)
      JSQ(K1) = JSQ(K3)
      JSQ(K3) = RT
      K1 = K1 - L
      IF( K1 .GE. 1) GO TO 15
   20 CONTINUE
   30 IF( L .GT. 1) GO TO 10
      RETURN
      END
```

```
      SUBROUTINE GETC (KCX,BLT,ULT,CT)
      COMMON / CV1 / IP(12),RP(12),TMP(10)
      COMMON / CV3 / M,N,NCF,PHIT,UZ,UCP,USM,EKO,MPLUS
      DIMENSION BLT(01),ULT(01),CT(01),FX1(10),FX2(10)
C
C  IF (KCX) 1. .GT. 0, EVALUATE KCX(TH) C(X)-SLOPE.
C           2. .LT. 0, EVALUATE CX(1) TO CX(IFX), (IFX = -KFX).
C           3. .EQ. 0, INVALID KCX **** UCP.
C
      IF(IP(6) .EQ. 1) WRITE(6,999)
  999 FORMAT(1H-,124X,6HGETC  )
      IF(KCX .GT. N)  GO TO 770
      IF(KCX)200,770,100
  100 FX1(KCX) = 0.0
      FX2(KCX) = 0.0
      CALL GETPHI(KCX,BLT,FX1,DMY)
      CALL GETPHI(KCX,ULT,FX2,DMY)
      NDX1 = KCX
      NDX2 = KCX
      GO TO 220
  200 ICX =(-1) * KCX
      IF( ICX .GT. N) GO TO 770
      DO 210 I = 1,ICX
      FX1(I) = 0.0
      FX2(I) = 0.0
      CT(I)  = 0.0
  210 CONTINUE
      CALL GETPHI(KCX,BLT,FX1,DMY)
      CALL GETPHI(KCX,ULT,FX2,DMY)
      NDX1 = 1
      NDX2 = ICX
  220 DO 225 J = NDX1,NDX2
      DIF = ULT(J) - BLT(J)
      IF(DIF    .EQ. 0.0) GO TO 225
      CT(J) = (FX2(J) - FX1(J)) / DIF
  225 CONTINUE
      GO TO 777
  770 WRITE(6,771)KCX
  771 FORMAT(1H1,13HINVALID KCX =,I3,10H  IN GETC   )
      CALL EXIT
C
  777 CONTINUE
  888 RETURN
C
      END
```

```
      SUBROUTINE GETPHI(KFX,XPHI,PHI,SUMPHI)                            20005050
      DIMENSION XPHI(01),PHI(01)                                        20005060
     COMMON / CV1 / IP(12),RP(12),TMP(10)                               20005070
     COMMON / CV2 / T(100,10),BO(100),BLO(10),ULO(10),CO(10)            20005080
     COMMON / CV3 / M,N,NCF,PHIT,UZ,USP,USM,EKO,MPLUS                   20005090
C                                                                       20005100
C  IF (KFX)  1. .GT.  0, EVALUATE  KFX(TH) F(X).                        20005110
C            2. .LT.  0, EVALUATE  FX(1) TO FX(IFX), (IFX = -KFX).      20005120
C            3. .EQ.  0, INVALID KFX **** UEP.                          20005130
C                                                                       20005140
      IF(IP(6) .EQ. 1) WRITE(6,999)                                     20005150
  999 FORMAT(1H-,124X,6HGETPHI)                                         20005160
C                                                                       20005170
     IF(KFX)100,300,500                                                 20005180
  100 SUMPHI=PP(12)                                                     20005190
     I = 1                                                              20005200
  160 IF(I+KFX) 150,150,400                                             20005210
  150 IF(I.GT.4)GO TO 140                                               20005220
     GO TO (101,102,103,104) I                                          20005230
  101 IF(XPHI(I).LT..001) GO TO 140                                     20005240
     PHI(I)= 0.30 + 0.006*XPHI(I)**0.95                                 20005250
     GO TO 200                                                          20005260
  102 PHI(I)= 0.0038*XPHI(I)**0.96                                      20005270
     GO TO 200                                                          20005280
  103 PHI(I)= 0.006*XPHI(I)**0.90                                       20005290
     GO TO 200                                                          20005300
  104 PHI(I)= 0.015*XPHI(I)**0.909                                      20005310
     GO TO 200                                                          20005320
  140 PHI(I) = 0.0                                                      20005330
  200 SUMPHI = SUMPHI + PHI(I)                                          20005340
     IF(KFX.GT.0) RETURN                                                20005350
     I = I+1                                                            20005360
     GO TO 160                                                          20005370
  500 SUMPHI = 0.0                                                      20005380
     I = KFX                                                            20005390
     GO TO 150                                                          20005400
  300 WRITE(6,301)                                                      20005410
  301 FORMAT(1H1,25HKFX = 0 IN GETPHI                )                  20005420
     CALL EXIT                                                          20005430
  400 RETURN                                                            20005440
      END                                                               20005450
```

```
      SUBROUTINE INITA(NCF,N,M)
C
C         THIS SUBROUTINE COPIES THE A MATRIX FROM TAPE TO DISC
C         AND STORES THE BO AND CO ARRAYS IN CORE. TAPE9 IS ASSUMED
C         TO BE THE TAPE AND TAPE3 IS THE DISC FILE.
C
      COMMON / CV2 / T(100,10),BO(100),BLO(10),ULO(10),CO(10)
      COMMON /ROWTYP/ IROWTP(101)
      DIMENSION AJ(100)
      REWIND 3
C     REWIND 9
      READ (9,100) DUM1,DUM2
  100 FORMAT (A4,10X,A8)
      READ(9,400)(IROWTP(J),J=1,M)
  400 FORMAT(I12)
      DO 10 I=1,N
      READ (9,200) (AJ(J),J=1,M)
  200 FORMAT (F12.4)
      IF(EOF,9) 1000,20
   20 IF (I.NE.N) GO TO 40
      DO 30 J=1,M
   30 BO(J)=AJ(J)
   40 IF (I.GT.NCF) GO TO 60
      AJ(M)=CO(I)
      DO 55 J=1,M
   55 T(J,I)=AJ(J)
   60 WRITE (3)      (AJ(J),J=1,M)
C       WRITE(7,1) (AJ(J),J=1,M)
1       FORMAT(5F15.5)
C       WRITE(6,2) (AJ(J),J=1,M)
2       FORMAT(1X,5F15.6)
   10 CONTINUE
      IROWTP(M)=3
      END FILE 3
      RETURN
 1000 WRITE (6,300) I
  300 FORMAT (* PREMATURE EOF ON A MATRIX TAPE AT COLUMN *,I5)
      STOP0002
      END
```

```
      SUBROUTINE NXBRN(XT,SIGMAI,NXB)
     COMMON / CV1 / IP(12),RP(12),TMP(10)
     COMMON / CV3 / M,N,NCF,PHIT,UZ,USP,USM,EKO,MPLUS
     DIMENSION XT(001),BLT(10),CT(10),  YT(10),SIGMAT(100,4)
     DIMENSION  FX1(10),FX2(10),DIF(10),NDX(10)
  10 CONTINUE
     IF(IP(6) .EQ. 1) WRITE(6,999)
 999 FORMAT(1H-,124X,6HNXBRN )
     NXB =  0
C  NXBRN GIVES BEST BRNCH-CANDIDATE FOR  XT(I)
     DO 5  J = 1,NCF
     FX2(J)= 0.0
     FX1(J)= 0.0
     DIF(J)= 0.0
     NDX(J)= 0
     BLT(J)=  SIGMAT(J,2)
     CT(J) =  SIGMAT(J,4)
   5 CONTINUE
     DO 20 J = 1,NCF
     YT(J) = XT(J) - BLT(J)
  20 CONTINUE
     NFX =(-1) * NCF
     CALL GETPHI(NFX,  XT,FX2,DMY)
     CALL GETPHI(NFX,BLT,FX1,DMY)
  40 CONTINUE
    IF (RP(4).NE.0)
   *WRITE (6,55)
  55 FORMAT(1H0,10X,*DIFFERENCE    =*,10X,*PHI(X)    -  PHI(LOWER BOUND)
   * -  (*,8X,4HC(X),4X,1H*,12X,1HX,6X,1H))
     DO 30 J = 1,NCF
     DIF(J) = FX2(J) - FX1(J) - CT(J)*YT(J)
    IF (RP(4).NE.0)
   * PRINT 50,J,DIF(J),FX2(J),FX1(J),CT(J),YT(J)
  50 FORMAT(1H0,I5,6F20.6)
     NDX(J) = J
  30 CONTINUE
     CALL GETASQ(NCF,DIF,NDX)
     NXB = NDX(NCF)
     RETURN
1000 CONTINUE
     END
```

```
      SUBROUTINE PARAMS
C
C  LABELLED COMMON
      COMMON / CV1 / IP(12),RP(12),TMP(10)
      COMMON / CV2 / T(100,10),BO(100),BLO(10),ULO(10),CO(10)
      COMMON / CV3 / M,N,NCF,PHIT,UZ,USP,USM,EKO,MPLUS
      COMMON / CV4 / TX(110),X(110),TX7(110),X7(110),XCON(10),COST
      COMMON / CV5 / STGMA(100,4),TSIG,IFIL
      COMMON / CV7 / NPHASE,NF1,CFX,IOPT,NOP,NOPS,NEWXZ
      COMMON / CV8 / NXPK,XK,NOBOL,EKBL(25)
      COMMON / CV9 / PSTGL(25),NXBL(25),XNXBL(25),BLIST(25,131)
C
       READ(5,10)(IP(I),I=1,12)
   10  FORMAT(12I6)
       REWIND 9
       READ(9,11) IP(1), IP(2)
11     FORMAT(2I6)
       IF( EOF, 5) 77777, 15
   15  CONTINUE
C
C  IP1=N, IP2=NORA, IP3=NCF, IP4=MMAX, IP5=NMAX, IP6=LPIN, IP7=LPOUT
C  IP8=ICTU, IP9=IBMAX, IP10=JBMAX, IP11=ICK, IP12=MXNOP
C
C  N - TOTAL NO. OF VARIABLES
C  NORA - NO. OF ROWS IN A-MATRIX
C  NCF - NO. OF VARIABLES W/CONCAVE-F(X)
C  MMAX - MAX. NO. OF CONSTRAINTS FOR JPLP
C  NMAX - MAX. NO. OF VARIABLES FOR JPLP
C  LPIN - IF (1) WRITE LP INPUT FOR EACH PROBLEM
C  LPOUT - IF (1) WRITE LP OUTPUT FOR EACH PROBLEM
C  ICTU - IF (1) CONSTRAIN COST-F(X) .LT. UO
C  IBMAX - MAX NO. OF ROWS IN BLIST
C  JBMAX - MAX NO. OF COLUMNS IN BLIST
C  ICK - IF (1) SET PRINT = .TRUE. IN JPLP
C  MXNOP - MAX. NO. OF LP PROBS. SOLVED BEFORE CALLING EXIT
C
       READ(5,20)(RP(I),I=1, 6)
   20  FORMAT( 6F12.0)
C
C  RP1=EPST, RP2=TMMAX, RP3=THETA, RP4-TRACE
C  EPSI - ADJUSTMENT FACTOR FOR UO
C  TMMAX - MAX.  RP-EXCT TIME IN SECONDS
C  THETA - X(I) ZERO RNDOFF
C  TRACE - IF(1) TRACE SOLUTION, USING LPIN, LPOUT, AND ICK CODES
C          IF(0) SKIP ALL INTERMEDIATE PRINT OUT
C
       TMMAX = RP(2)
       CALL SET(TMMAX)
C
       CALL PRESET
C
       WRITE(6,30)(IP(I),I=1,12)
   30  FORMAT(1H1,20HINTEGER PARAMETERS =,12I6)
       WRITE(6,40)(RP(I),I=1,6)
   40  FORMAT(1H-,17HREAL PARAMETERS =,6F18.8)
       N = IP(1)
       NORA = IP(2)
```

```
      NCF = IP(3)                                                       20006850
      M=NCF + NORA                                                      20006860
C                                                                       20006870
      IBMAX = IP(9)                                                     20006880
C                                                                       20006890
   55 READ(9,20)(        ULO(J), J = 1,NCF)                             20006900
      DO 60 J=1,NCF                                                     20006910
      IF(ULO(J).LT.0) ULO(J) = - ULO(J)                                 20006920
60    CONTINUE                                                          20006930
C     READ(5,20) (BLO(J),J=1,NCF)
      DO 61 J=1,NCF
C                                                                       20006950
61    BLO(J) = 0.0
      WRITE(6,90)                                                       20006960
   90 FORMAT(1H-,25H X(J) LOWER-UPPER BOUNDS )                          20006970
      DO 100 J = 1,NCF                                                  20006980
      WRITE(6,95)J,BLO(J),ULO(J)                                        20006990
   95 FORMAT(1H0,2X,I3,3X,2E12.4)                                       20007000
  100 CONTINUE                                                          20007010
      NOBOL = 0                                                         20007020
  777 RETURN                                                            20007030
77777 CONTINUE                                                          20007040
      STOP 00001                                                        20007050
      END                                                               20007060
```

```
      SUBROUTINE PRESET
C
C LABELLED COMMON
      COMMON / CV1 / IP(12),PP(12),TMP(1 )
      COMMON / CV2 / T(110,10),BO(130),BLO(10),ULO(10),CO(10)
      COMMON / CV3 / M,N,NCF,PHIT,UZ,USP,USM,EKO,MPLUS
      COMMON / CV4 / IX(110),X(110),IXZ(110),XZ(110),XCON(10),COST
      COMMON / CV5 / SIGMA(100,4),TSTG
      COMMON / CV7 / NPHASE,NF1,CFX,IOPT,NOP,NOPS,NEWXZ
      COMMON / CV8 / NXBK,XK,NOBOL,EKBL(25)
      COMMON / CV9 / PSTGL(25),NXBL(25),XNXBL(25),BLIST(25,131)
C
      IF(IP(6) .EQ. 1) WRITE(6,999)
  999 FORMAT(1H-,124X,6HPRESET)
      N=IP(1)
      NOPB = IP(2)
      NCF=IP(3)
      IBMAX = IP(9)
      JBMAX = IP(10)
C
C
      DO 13 J=1,NCF
      CO(J) = 0.0
      BLO(J) = 0.0
      ULO(J) = 0.0
   13 CONTINUE
C
      DO 15 I = 1,NOPB
      DO 14 K=1,4
   14 SIGMA(I,K)=0.0
      BO(I) = 0.0
   15 CONTINUE
C
      NEWXZ=0
      PHIT=0
      UZ = 1.E+35
      USP = 1.E+36
      USM = 1.E+36
      COST=0.0
      TSTG=0.0
      NF1=0
      CFX=0.0
      IOPT=0
      NOP=0
      NXBK=0
      XK =0.0
      NOBOL=0
C
      DO 20 I =1,IBMAX
      EKBL(I) = 0.0
      PSTGL(I)= 0.0
      NXBL(I)= 0
      XNXBL(I)=0.0
      DO 20 J=1,JBMAX
      BLIST(I,J) = 0.0
   20 CONTINUE
C
```

Reproduced from best available copy.

```
RETURN                                                    20007640
END                                                       20007650
```

```
      SUBROUTINE READIN                                                 20007650
      COMMON / CV1 / IP(12),PP(12),TMP(1 )                              20007670
      DATA ENDER / 5HEND     /                                          20007680
      REWIND 7                                                          20000210
      NC=PP(3)                                                          20007690
      IF(NC.EQ.0) GO TO 20                                              20007700
      DO 10 I=1,NC                                                      20007710
      READ (5,100) (TMP(J),J=1,8)                                       20007720
      WRITE(7,100) (TMP(J),J=1,8)                                       20007730
100   FORMAT (8A10)                                                     20007740
 10   CONTINUE                                                          20007750
 20   WRITE(7,100) ENDER                                                20007760
      RETURN                                                            20007770
      END                                                               20007780
```

Reproduced from best available copy.


```
      SUBROUTINE ESCAPE(D)                                              20012210
```

```
      SUBROUTINE SET(TMMAX)                                             20007790
      COMMON/TMX/TMO,EXT                                                20007800
C                                                                       20007810
C  SECOND GIVES JOB CPU EXECUTION TIME IN 1/1000 OF A SECOND            20007820
C                                                                       20007830
      CALL SECOND(TMO)                                                  20007840
      EXT = TMMAX + TMO                                                 20007850
      RETURN                                                            20007860
      END                                                               20007870
```

```
      SUBROUTINE TAROUT(IPT)
C  LABELLED COMMON
      COMMON / CV1 / IP(12),PP(12),TMP(10)
      COMMON / CV2 / T(100,10),BO(100),BLO(10),ULO(10),CO(10)
      COMMON / CV3 / M,N,NCF,PHIT,UZ,UCP,USM,EKO,MPLUS
      COMMON / CV4 / IX(11 ),X(110),IX7(110),X7(110),XCON(10),COST
      COMMON / CV5 / SIGMA(100,4),TSIG
      COMMON / CV7 / NPHASE,NF1,CEX,IOPT,NOP,NOPS,NEWX7
      COMMON / CV8 / NXBK,XK,NOBOL,EKBL(25)
      COMMON / CV9 / PSIGL(25),NXBL(25),XNXBL(25),BLTST(25,131)
C
      IF(NOP .GT. 1) GO TO 90
      GO TO 100
   90 CONTINUE
      IF(PP(4) .EQ. 0.0) GO TO 777
  100 CONTINUE
      WRITE(6,101)
  101 FORMAT(1H1,30HTAROUT - GENERAL - INFORMATION)
      IF (IPT.NE.3) CALL TIMEC
      WRITE(6,105)UZ,USP
  105 FORMAT(1H0,6HUZERO=,1PE18.7,6X,6HUSP =,1PE18.7)
      IF (NEWX7.EQ.1)
     *WRITE (6,570) (IX7(I),X7(I),I=1,MPLUS)
  570 FORMAT (7H0X7ERO // (7X,5(7H   COL ,I4,2H =,F12.4)))
      IF (IPT.EQ.3) GO TO 777
      NEWX7=0
      WRITE(6,109)
  109 FORMAT(1H0,10HSIGMA(I,J),13X,5HPHS-B,12X,6HLW-BND,12X,6HUP-BND,
     111X,7HC-SLOPE)
C
C
      DO 115 I=1,NCF
      WRITE(6,113) I, (SIGMA(I,J),J=1,4)
  113 FORMAT(1H ,5X,I2,7X,4E18.5)
  115 CONTINUE
C
      WRITE(6,117)TSIG
  117 FORMAT(1H0,6HE(K) =,E18.6)
C
      IF(IPT.NE. 1)GO TO 145
C
      IF(NOBOL.LE.0) GO TO 145
      IT = NOBOL
      DO 131 I=1,IT
      WRITE(6,121)I,PSIGL(I),NXBL(I),XNXBL(I),EKBL(I)
  121 FORMAT(14-,6HNODE =,I4,6X,6HCOST =,F20.6,6X,8HNX-BRN =,I4,6X,
     1 7HX-BRN =,F20.6,6X,6HE(K) =,F20.6)
  131   CONTINUE
  145 CONTINUE
  777 RETURN
      END
```

```
      SUBROUTINE TIMEC                                                  20008390
      COMMON / CV3 / M,N,NCF,PHIT,UZ,USP,USM,EKO,MPLUS                  20008400
      COMMON / CV4 / IX(110),X(110),IXZ(110),XZ(110),XCON(10),COST      20008410
      COMMON / CV7 / NPHASE,NF1,CFX,IOPT,NOP,NOPS,NEWXZ                 20008420
       COMMON /TSW/ NSWW                                                20008430
       COMMON/TMX/TMO,EXT,TITLE(4)                                      20008440
C                                                                       20008450
C  SECOND GIVES JOB CPU EXECUTION TIME IN 1/1000 OF A SECOND            20008460
C                                                                       20008470
       CALL SECOND(SECS)                                                20008480
       XX= SECS - TMO                                                   20008490
      WRITE(6,666) XX                                                   20008500
  666 FORMAT(12H0EXCT-TIME =,F9.3,8H SECONDS)                           20008510
       IF(SECS .LT. EXT) GO TO 100                                      20008520
       WRITE(6,667)                                                     20008530
  667  FORMAT(37H TIME IS UP...CYCLING TO NEXT PROBLEM)                 20008540
      MNC=(-1)*NCF                                                      20008550
 4446 WRITE(8,4448)(TITLE(I),I=1,4)                                     20008560
 4448 FORMAT(4A10)                                                      20008570
      WRITE(8,4447)(IXZ(I),XZ(I),I=1,MPLUS)                             20008580
 4447 FORMAT(I4,4X,F12.4)                                               20008590
      WRITE(8,4447)MNC,UZ                                               20008600
      NEWXZ=1                                                           20008610
      CALL TABOUT (3)                                                   20008620
      CALL BBCAV2                                                       20008630
  100  RETURN                                                           20008640
       END                                                              20008650
```

```
      SUBROUTINE LP(MROWS,NCOLS,NCHGS)
      COMMON / CV1 / IP(12),PP(12),TMP(10)
      COMMON / CV2 / T(110,10),BO(100),BLO(10),UBS(10),CO(10)
      COMMON / CV4 / IX(110),X(110),TX7(110),X7(110),XCON(10),COST
      COMMON / CV7 / NPHASE,NF1,CFX,IOPT,NOP,NOPS,NEWXZ
C--------SET PHS TO INPUTM+1
      COMMON /PHS/ PHS(100)
C--------SET AJ(AS MUCH AS POSSIBLE) OVER INPUTM+1**2 FOR CORE COLUMNS
      COMMON /CORE/ JAPEJ(101),JA(101),JAK(101),AJ(11000)
      COMMON /A/ ALPHA(101) /B/ BETA(101) /C/ GAMMA(101) /D/ DELTA(101)
      COMMON /DJS/ DJ(10)
C--------SET IROWTP(INPUTM+1)  NAME(INPUTM+INPUTM+1)
      COMMON /ROWTYP/ IROWTP(101) /NAMES/ NAME(600)
      COMMON /I/ M,L,MPL,MC,NT,ICOST,IC,IPHASE,JPHS,IPI
      COMMON /LIMS/ MAXTRY,NTRY,JNCORE,NORMAX,NSCAN
      COMMON /STATE/ JROS,IROW,JCOL,JOUT,ITRN,NREJ,NPIF,NOJS
      COMMON /FILES/ TA1,TA2,TMAP
      COMMON /INPUT/INPUT,INPUTM,INPUTN
      COMMON /BOUNDS/ BOUNDS(100),IBDS(100),NBDS
      COMMON /PARAMS/ TMAX,ITNINV,INVF,K1,K2,K3,K4,K5
      COMMON/IXX/IXX(100) /XX/ XX(100)
C-----THE B ORIGIN IS MOVED DOWN THE AJ SPACE --IGNORE SIZE
      REAL B(100)
      EQUIVALENCE (AJ,B)
C
      CALL MSSG(40HLP/LONG/5-GUB CYCLIC                                  )
C-----FILE DEFINITIONS
      TA1=1
      TA2=2
      INPUT=3
      TMAP=7
      REWIND INPUT
      CALL FTNBIN(1,1,TA1)
      CALL FTNBIN(1,1,TA2)
C-----SET LENGTH OF AJ SPACE IN NWAJ
      NWAJ=11000
C
C
C
C
C
C
C
C
C
      ICOST=INPUTM=MROWS
      JPHS=INPUTN=NCOLS
      NBDS=NCHGS
      DO 10 I=1,NBDS
      IBDS(I)=I
 10   BOUNDS(I)=UBS(I)
C-----MAPOUT AFTER TMAX, QUIT AFTER K5 CYCLES
      TMAX=200.
      K5=200
C-----XCHECK BETWEEN CYCLES N300 TO NNNAT INCREMENTS K2
       K2 = 1
      K4=100
      K4=0
```

```
      K4=1                                                              20009230
C-----PRINT CONTROL K3                                                  20009240
       K3 = 0                                                           20009250
      K3=5*7*11*13                                                      20009260
      IF(IP(8).NE.1) K3=K3/5                                            20009270
      IF(IP(7).EQ.0) K3=13*7                                            20009280
      IF(IP(4).EQ.0.0) K3=1                                             20009290
C                                                                       20009300
C                                                                       20009310
C                                                                       20009320
C                                                                       20009330
C                                                                       20009340
C                                                                       20009350
C                                                                       20009360
C                                                                       20009370
C                                                                       20009380
C                                                                       20009390
C                                                                       20009400
C                                                                       20009410
C-----PROGRAM VERBS                                                     20009420
  100 CALL SETUP                                                        20009430
       WRITE(6,999) IPOWTP                                              20009440
999    FORMAT(* DUMP IPOWTP*/(1X,50I1))                                 20009450
C-----M IS NOW ACTUAL NON-GUB ROWS, L IS NO. OF GUB ROWS NWAJ IS AJ SPAC20009460
      ML=M+L                                                            20009470
C-----OPTIMIZE CORE COLUMN STORAGE                                      20009480
      IORG=NWAJ-M*M                                                     20009490
      NCPMAX=MIN0( 99,IORG/M)- 3                                        20009500
  200 CALL MAPIN(B(IORG))                                               20009510
  250 FORMAT(//* LP PROBLEM DATA FOR THIS RUN *                         20009520
     +         /* NON-GUB ROWS * I6                                     20009530
     +         /*     GUB-ROWS * I6                                     20009540
     +         /                                                        20009550
     +         /* LOGICALS     * I6                                     20009560
     +         /* TOTAL COLUMNS* I6                                     20009570
     +         /* MAX IN CORE  * I6                                     20009580
     +         /* INVERT FREQU.* I6 * CYCLES*                           20009590
     +         /* MAX RUN TIME * F6 * SECONDS*                          20009600
     +         /* MAX CYCLES   * I6 * ITERATIONS*                       20009610
     +   ////)                                                          20009620
      WRITE(6,250) M,L,MC,NT,NCPMAX,INVF,TMAX,K5                        20009630
      IF (IORG.GE.2*M) GOTO 300                                         20009640
      CALL ERROR(40HLP--INSUFFICIENT  SPACE STATED IN NWAJ       )      20009650
      CALL ESCAPE(B(IORG))                                              20009660
  300 CALL INVERT(B(IORG))                                              20009670
  400 CALL PRIMAL(B(IORG))                                              20009680
      ITNTNV=0                                                          20009690
      CALL INVERT(B(IORG))                                              20009700
      IPT=IORG+IPT-1                                                    20009710
      DO 500 J=1,NT                                                     20009720
      CALL IN(J,AJ,0)                                                   20009730
  500 OJ(J)=DOT(M,B(IPT),AJ)                                            20009740
      IPT=IPT-IORG+1                                                    20009750
      WRITE(6,501) (J,OJ(J),NAME(J),J=1,NT)                             20009760
  501 FORMAT(*0DJ VALUES FOR FINAL SOLUTION COLUMNS*/(T10,E12.4,T10))   20009770
C-----END PHASE 2, OR UNBOUNDED OR NO FEASIBLE SOLUTION                 20009780
  800 CONTINUE                                                          20009790
      CALL MAPOUT(B(IORG))                                              20009800
```

```
      NVAR=INPUTM+NCHGS                                                 20009810
      DO 900 I=1,NVAR                                                   20009820
      IX(I)=IXX(I)                                                      20009830
  900 X(I)=XX(I)                                                        20009840
      COST=-BETA(ICOST)                                                 20009850
 7776 RETURN                                                            20009860
      END                                                               20009870
```

```
      FUNCTION BOUND(J)                                                 20009880
      COMMON /BOUNDS/ BOUNDS(100),IBDS(100),NBDS                        20009890
      COMMON /I/ M,L,MPL,MC,NT,ICOST,IC,IPHASE,JRHS,IPI                 20009900
      COMMON /NAMES/ NAME(100)                                          20009910
C-----PICKS UP BOUND FROM PACKED LIST,EITHER  FINITE OR  10**35         20009920
      BOUND=1.E70                                                       20009930
      IF(J.GT.NT) RETURN                                                20009940
      IB=NAME(J)/100000                                                 20009950
       IF(IB.LE.0.OR.IB.GT.NBDS) RETURN                                 20009960
      BOUND = BOUNDS(IB)                                                20009970
      RETURN                                                            20009980
      END                                                               20009990
```

```
      SUBROUTINE COLUMN(JCOL,B)
C-----GUB VERSION  APRIL 20-71
      COMMON  /MOVES/ THETA,BNDJ,DMAX,PRMLER,DUALER
      COMMON /STATE/ JPOS,IROW,JKOL,JOUT,ITRN,NREJ,NPIF,NDJS
      COMMON /TOLS/ DJTOL,ZERO,PIVTOL,CTOL,PERTOL,DERTOL
      COMMON /T/ M,L,MPL,MC,NT,ICOST,IC,IPHASE,JRHS,IPT
      COMMON /LIMS/ MAXTRY,NTRY,JNCORE,NCRMAX,NSCAN
      COMMON /A/ ALPHA(101) /B/ BETA(1 1) /C/ GAMMA(101) /D/ DELTA(101)
      COMMON /CORE/ JAREJ(101),JA(101),JAK(101),AJ(1000)
      COMMON /NAMES/ NAME(100)
      COMMON /DJS/ DJ(100)
      LOGICAL  BASIC,ATBND,NULL,KEY
      REAL B(1)
      KEY(I)=MOD(NAME(I),10).EQ.4
      NPKT(J)=MOD(NAME(J),100000)/10
C
C-----CHECKS COLS IN CORE, IF NONE GETS SOME, IF SOME FINDS BEST
      NTRY = 1+NTRY
      MAXTRY=NCRMAX
      IF( NTRY.GT. MAXTRY)  GOTO 1
      IF( JNCORE.NE.0)      GOTO 5
C-----CHECK FOR MORE COLUMNS ON DISC
 1    CALL DISC(B)
      NTRY = 0
      NDJST=NDJS
      IF( JNCORE.EQ.0)      GOTO 100
C
C-----RE-PRICE  VECTORS IN CORE
 5    JORG = 1
C-----NO PRICING IF REJECTS OR JUST PRICED DISC
      IF(NREJ.NE.0  .OR.  NTRY.EQ.0) GOTO 50
C-----PRICE OUT COLUMN
      DO 40  J= 1,JNCORE
      DJ(J)=DOT(M,B(IPT),AJ(JORG))
 40   JORG = JORG+M
C
C-----NOW FIND BEST COLUMN IN CORE, NON-BASIC OR BOUNDED
 50   DMAX=0
      NDJS=0
      JPKTO=0
      PIKEY=0.
      DO  60  J=1,JNCORE
      IF(JAREJ(J).EQ.1) GOTO 60
      JPOS = JA(J)
      JTYPE=MOD(NAME(JPOS),10)
      IF(JTYPE.EQ.2) GOTO 60
      IF(JTYPE.EQ.4) GOTO 60
      IF(JTYPE.EQ.0) GOTO 60
      JPKT=NPKT(JPOS)
      IF(JPKT.EQ.0) GOTO 55
      IF(JPKT.EQ.JPKTO) GOTO 55
      JKEY=KEYFND(JPKT)
C-----NEW PACKET STARTED, FINE KEY AND KEY PRICE
      IF(JKEY.EQ.0) GOTO 60
      PIKEY=DJ(JKEY)
      JPKTO=JPKT
 55   D=DJ(J)
```

```
      IF(JTYPE.EQ.3) D=-DJ(J)                                           20010570
      IF(JPKT.NE.0) D=D-PIKEY                                           20010580
      IF(D.LT.-ZERO)  NDJS=1+NDJS                                       20010590
      IF(D.GE. DMAX)  GOTO 60                                           20010600
      DMAX =D                                                           20010610
      JCOL = J                                                          20010620
 60   CONTINUE                                                          20010630
      NCORE=JNCORE                                                      20010640
C-----RESTORE COUNT OF NDJS FROM CHECK IF JUST DONE                     20010650
      IF(NTRY.EQ.0 .AND. NT.GT.NCRMAX) NDJS=NDJST                       20010660
      IF( DMAX.LT.-DJTOL)  GOTO 70                                      20010670
C-----CURRENT COLS NO-GOOD,  QUIT IF THESE ARE BEST                     20010680
      IF( NTRY.EQ.0)       GOTO 100                                     20010690
      GOTO 1                                                            20010700
C                                                                       20010710
C-----RETURN WITH COLUMN INDEX                                          20010720
  70  RETURN                                                            20010730
C                                                                       20010740
C-----NO GOOD COLS,  OPTIMUM                                            20010750
 100  JCOL=0                                                            20010760
C-----SAVE OLD COLUMNS                                                  20010770
      JNCORE=NCORE                                                      20010780
      RETURN                                                            20010790
C                                                                       20010800
      END                                                               20010810
```

```
      SUBROUTINE DISC(B)
C     REVISED  10/71
C-----CHECKS DISC FOR COLUMNS, ACCEPTING 1/NBCH, IF NOT ALL IN CORE.
C     RETURNS  JNCORE COLUMNS AND PRICES,  OR JNCORE=0
C-----PACKETS CAN IN BE INTER-MIXED WITH SOME LOSS OF EFFICIENCY
C     DUE TO MULTIPLE KEY SEARCHES
      COMMON /I/ M,L,MPL,MC,NT,ICOST,IC,IPHASE,JPHS,IPI
      COMMON /STATE/ JPOS,IROW,JCOL,JOUT,ITRN,NREJ,NPIF,NDJS
      COMMON /TOLS/ DJTOL,ZERO,PIVTOL,CTOL,PERTOL,DERTOL
      COMMON /PARAMS/ TMAX,ITNINV,INVF,K1,K2,K3,K4,ITNCHK
      COMMON /LIMS/ MAXTRY,NTRY,JNCORE,NCPMAX,NSCAN
      COMMON /CORE/ JAREJ(101),JA(101),JAK(101),AJ(1000)
      COMMON /BASIS/ IBASIS(101),KEYS(101)
      COMMON /DJS/ DJ(100)
      COMMON /NAMES/ NAME(100)
      INTEGER PKT,PKTO
      REAL B(1)
      LOGICAL BASIC,ATBND ,NULL,CHEK
      NPKT(J)=MOD(NAME(J),100000)/10
      NULL(I)=MOD(NAME(I),10).EQ.0
C
C-----CHECK FOR AN INVERT (  ITRN.GE.ITNINV)
      CALL INVERT(B)
C
C-----ALL IN CORE,  NCPMAX SET IN LP
      IF( NT.LT.NCPMAX) GOTO 200
C-----ACCEPT 1 COL/NBCH COLS,  BEST AT IORG, NEW AT JOPG, (ICOL,JCOL)
      NBCH=NT/NCPMAX/4+1
      NDJS=PKTO=JNCORE=0
      JORG=0
      JCOL=1
      IORG=M
      ICOL=2
      NCORE=2
      CALL  INPOS(JNT)
      NBCHS = (NT+NBCH-1)/NBCH
C
      DO 1000  JBCH  =1, NBCHS
      DJOLD = 1.E35
      DO 100   JEBCH= 1,NBCH
C-----BATCH CYCLE,  NEXT COLUMN  JNT
      JNT= 1+MOD(JNT,NT)
      JTYPE =  MOD(NAME(JNT),10)
C-----SKIP NULL, BASIC  OR KEY COLUMNS
      IF(JTYPE.EQ.2)  GOTO 100
      IF(JTYPE.EQ.4)  GOTO 100
      IF(JTYPE.EQ.0)  GOTO 100
C
C-----IF IN A SUB PACKET, GET KEY
      PKT= NPKT(JNT)
      IF( PKT.EQ.0    )  GOTO   20
      IF( PKT.EQ.PKTO)  GOTO   20
C-----USE AN UNUSED KEY SLOT
      JKEY=KEYEND(0)
      IF(JKEY.NE.0) GOTO 15
 10   NCORE=1+NCORE
      JKEY=NCORE
```

```
 15   KORG= M*JKEY-M                                                    20011390
      CALL INPCKD(KEYS(PKT)/100,AJ(KORG+1),JKEY)                        20011400
      DJ(JKEY)= DOTS(M,B(IPI),AJ(KORG+1) )                              20011410
      PKTO=PKT                                                          20011420
C                                                                       20011430
C-----NOW GET COLUMN  AND DJ.                                           20011440
 20   CONTINUE                                                          20011450
      CALL IN(JNT, AJ(JORG+1), JCOL)                                    20011460
      DJ(JCOL)= DOTS(M,B(IPI),AJ(JORG+1) )                              20011470
C                                                                       20011480
C-----CORRECT FOR PACKET AND BOUND EFFECTS                              20011490
      DJNEW = DJ(JCOL)                                                  20011500
      IF(PKT.NE.0)  DJNEW = DJNEW - DJ(JKEY)                            20011510
      IF(JTYPE.EQ.3)DJNEW =-DJNEW                                       20011520
      IF( DJNEW.LT.-ZERO)   NDJS=1+NDJS                                 20011530
C                                                                       20011540
C-----SELECTION STAGE INTERCHANGE BEST FOR NEW                          20011550
      IF(DJNEW.GE.DJOLD)  GOTO 100                                      20011560
      DJOLD=DJNEW                                                       20011570
      I=ICOL                                                            20011580
        ICOL=JCOL                                                       20011590
             JCOL=I                                                     20011600
      I=IORG                                                            20011610
        IORG=JORG                                                       20011620
             JORG=I                                                     20011630
 100  CONTINUE                                                          20011640
C                                                                       20011650
      IF( DJOLD.GT.-DJTOL) GOTO  999                                    20011660
C                                                                       20011670
C-----PRESERVE THE BEST                                                 20011680
      JNCORE=1+JNCORE                                                   20011690
       NCORE=1+NCORE                                                    20011700
      ICOL  = NCORE                                                     20011710
      IORG  = M*ICOL-M                                                  20011720
 999  IF(  NCORE.GE. NCRMAX) GOTO 110                                   20011730
 1000 CONTINUE                                                          20011740
 110  CONTINUE                                                          20011750
      IF(JNCORE.NE.0) JNCORE=NCORE-1                                    20011760
      GOTO 500                                                          20011770
C                                                                       20011780
C-----ALL IN CORE CASE,  READ AND PRICE .                               20011790
 200  IF( JNCORE.EQ.0 ) GOTO250                                         20011800
      JNCORE=0                                                          20011810
      GOTO 500                                                          20011820
C                                                                       20011830
 250  CONTINUE                                                          20011840
      JORG=0                                                            20011850
      DO 300 JNT=1,NT                                                   20011860
      CALL IN(JNT,AJ( JORG+1),JNCORE+1)                                 20011870
      IF( NULL(JNT) )GOTO 300                                           20011880
      JNCORE=1+JNCORE                                                   20011890
      DJ(JNCORE) = DOTS(M,B(IPI), AJ(JORG+1))                           20011900
      JORG = M+JORG                                                     20011910
 300  CONTINUE                                                          20011920
      GOTO 500                                                          20011930
C                                                                       20011940
C-----DIAGNOSTICS  IF K3*23                                             20011950
 500  CONTINUE                                                          20011960
```

```
      IF( MOD(K3,23).NE.0 )  RETURN                                     20011970
      WRITE(6,501)     (JA(J), DJ(J), J=1,JNCOSE )                      20011980
  501 FORMAT(* DISC-PROVIDED*/(8( I5, F10.2 )) )                        20011990
      RETURN                                                            20012000
      END                                                               20012010
```

```
      FUNCTION DOT(M,X,Y)                                               20012020
C-----INNER PRODUCT OF X AND Y                                          20012030
      DOUBLE PRECISION  SUM                                             20012040
      REAL  X(1),Y(1)                                                   20012050
      SUM=0.0                                                           20012060
      DO  100  I=1,M                                                    20012070
      IF(Y(I).EQ.0.0) GOTO 100                                          20012080
      SUM=SUM+X(I)*Y(I)                                                 20012090
 100  CONTINUE                                                          20012100
      DOT = SUM                                                         20012110
      RETURN                                                            20012120
C                                                                       20012130
C-----SINGLE PRECISION VERSION FOR SPEED                                20012140
      ENTRY DOTS                                                        20012150
      DOT=0.0                                                           20012160
      DO 200 I=1,M                                                      20012170
 200  DOT=DOT+X(I)*Y(I)                                                 20012180
      RETURN                                                            20012190
      END                                                               20012200
```

```
      SUBROUTINE ESCAPE(R)
C------GUB VERSION APRIL/71
      COMMON /PARAMS/ TMAX,ITNINV,INVF,K1,K2,K3,K4,K5
      COMMON /LIMS/ MAXTRY,NTRY,JNCORE,NCRMAX,NSCAN
      COMMON /T/ M,L,MPL,MC,NT,ICOST,IC,IPHASE,JPHS,IPI
      COMMON /BASIS/ IBASIS(101),KEYS(101)
      COMMON /NAMES/ NAME(100)
      COMMON /A/ ALPHA(101) /B/ BETA(101) /C/ GAMMA(101) /D/ DELTA(101)
      COMMON /CORE/ JAREJ(101),JA(101),JAK(101),AJ(1000)
      COMMON /DJS/ DJ(100)
      DATA AALPHA/5HALPHA/,ABETA/4HBETA/,AGAMMA/5HGAMMA/,APT/2HPT/
      DATA  AJAREJ/5HJAREJ/,AJA/2HJA/,ANAME/4HNAME/,ABASIS/5HBASIS/
      DATA ADELTA/5HDELTA/,ADJ/2HDJ/, AKEY/3HKEY/
      COMMON /RHS/ RHS(100)
      NPKT(J)=MOD(NAME(J),100000)/10
      CALL MESSG(40HESCAPED AFTER DUMP OF LP SYSTEM              )
      WRITE(6,3)  ANAME
      WRITE(6,2) (NAME(J),J=1,NT)
      WRITE(6,3)  ABASIS
      WRITE(6,2) (IBASIS(J),J=1,M)
      WRITE(6,3)AKEY
      WRITE(6,2)(KEYS(I),I=1,L)
      WRITE(6,3)  AJA
      WRITE(6,2) (JA(J),J=1,JNCORE)
      WRITE(6,3)  AJAREJ
      WRITE(6,2) (JAREJ(J),J=1,JNCORE)
      WRITE(6,3)  AALPHA
      WRITE(6,1) (ALPHA(J),J=1,MPL)
      WRITE(6,3)  ABETA
      WRITE(6,1) (BETA (J),J=1,MPL)
      WRITE(6,3)  AGAMMA
      WRITE(6,1) (GAMMA(J),J=1,M)
      WRITE(6,3) ADELTA
      WRITE(6,1)(DELTA(J),J=1,M)
      WRITE(6,3)  ADJ
      WRITE(6,1) (DJ    (J),J=1,JNCORE)
 1    FORMAT(1H ,10F12.5)
 2    FORMAT(1H ,10I12)
 3    FORMAT(1H0,A10)
      CALL MAPOUT(R)
C-----CAUSE A DUMP
      I=0
      WRITE(I) I
      RETURN
      END
```

```
      SUBROUTINE EXITS                                                  20012660
      COMMON / CV7 / NPHASE,NF1,CFX,IOPT,NOP,NOPS,NEWXZ                 20012670
C-----PRIMAL CALLS THESE ENTRY POINTS AT THE END OF EACH PHASE          20012680
C-----------------------------------------------------------------------20012690
      ENTRY OPT1                                                        20012700
      NPHASE=1                                                          20012710
      RETURN                                                            20012720
C-----------------------------------------------------------------------20012730
      ENTRY OPT2                                                        20012740
      NPHASE=2                                                          20012750
       NF1 = 1                                                          20012760
      CALL STATUS(40HPPIMAL--END OF PHASE 2--OPTIMAL              )     20012770
      RETURN                                                            20012780
C-----------------------------------------------------------------------20012790
      ENTRY UNBND                                                       20012800
      NPHASE=4                                                          20012810
      CALL STATUS(40HPRIMAL--UNBOUNDED SOLUTION                   )     20012820
      RETURN                                                            20012830
C-----------------------------------------------------------------------20012840
      ENTRY NOFEAS                                                      20012850
      NPHASE = 5                                                        20012860
      CALL STATUS(40HPRIMAL--NO FEASIBLE SOLUTION                 )     20012870
      RETURN                                                            20012880
C-----------------------------------------------------------------------20012890
      END                                                               20012900
```

```
      SUBROUTINE FEASCH(B)
C------OUR VERSION APRIL/71
C-----GIVEN CURRENT INVERSE B, RHS, KEY AND BOUNDS IN GAMMA
C-----COMPUTES CURRENT SOLUTION BETA, NO. OF INFEASIBLES NPIF.
C-----IF BETA INFEAS, ADDS ARTIFICIALS AND REVERTS TO PHASE-1
      COMMON /PARAMS/ TMAX,ITNINV,INVF,K1,K2,K3,K4,K5
      COMMON /STATE/ JPOS,IROW,JCOL,JOUT,ITRN,NREJ,NPIF,NDJS
      COMMON /BASIS/ IBASIS(101),KEYS(101)
      COMMON /A/ ALPHA(101) /B/ BETA(101) /C/ GAMMA(101) /D/ DELTA(101)
      COMMON /I/ M,L,MPL,MC,NT,ICOST,IC,IPHASE,JRHS,IPI
      COMMON /CORE/ JAREJ(101),JA(101),JAK(101),AJ(1000)
      COMMON /TOLS/ DJTOL,ZERO,PIVTOL,CTOL,PERTOL,DERTOL
      COMMON /BOUNDS/ BOUNDS(100),IBDS(100),NBDS
      COMMON /NAMES/ NAME(100)
      COMMON /RHS/ RHS(100)
      LOGICAL KEY
      REAL B(1)
      NPKT(I)=MOD(NAME(I),100000)/10
      ITP(J)=MOD(IBASIS(J),100)
      KEY=.FALSE.
      DO 10 I=1,M
 10   DELTA(I)=0.0
      DELTA(M)=1.0
C-----COMPUTE EFFECTIVE RHS IN GAMMA USING  KEY + BOUNDS ALREADY  THERE
      DO 20 I=1,M
 20   GAMMA(I)=+GAMMA(I)+RHS(I)
C-----CYCLE ELEMENTS OF SOLUTION
      NPIF=0
      SUMIF=0.
      BNDJ=1.E70
      IORG=1
      MM1=M-1
      DO 100 I=1,MM1
      SUM = DOT(M, B(IORG), GAMMA )
      BETA(I)=SUM
      IORG= M+IORG
      JOUT= IBASIS(I)/100
      IF(NBDS.EQ.0) GOTO 50
C-----CHECK XJOUT LESS THAN BOUND
      BNDJ = BOUND(JOUT)
      IF( SUM.LE.BNDJ+ZERO) GOTO 50
C-----BOUND VIOLATED, REMOVE BOUND AND TREAT AS INFEAS XJOUT
      IF(MOD(K3,13).EQ.0) WRITE(6,101) I,JOUT,SUM,BNDJ
      CALL SETBND (JOUT)
      BETA(I)=BETA(I)-BNDJ
      GOTO 60
C-----CHECK XJOUT POSITIVE FOR NON-FREE ROWS
 50   IF( ITP   (I).EQ.3 )  GOTO 100
      IF( BETA(I).GE.-ZERO) GOTO 100
C-----INFEASIBLE,  ADD ARTIFICIAL TO KILL ERROR AND PIVOT IN
      IF(MOD(K3,13).EQ.0) WRITE(6,101) I,JOUT,SUM,BNDJ
 55   CONTINUE
      CALL SETBNB(-JOUT)
      BETA(I)= -BETA(I)
 60   NPIF=1+NPIF
      JPKT=0
      IF(JOUT.LE.NT) JPKT=NPKT(JOUT)
```

```
      IF(JPKT.NE.0) KEYS(JPKT)=KEYS(JPKT)-1
      SUMIF=SUMIF+BETA(I)
      IBASIS(I)=100*(100+JOUT+NT)+MOD(IBASIS(I),100)
      DELTA(I)= -1.
      IF(JOUT.GT.NT) DELTA(M)=2.
      CALL PIVOT(I,B,DELTA)
      DELTA(I)=  0.
      DELTA(M)=1.
      IF(KEY) GOTO 150
 100  CONTINUE
 101  FORMAT(* INFEAS--ROW*I5*  COL*I5*  VALUE*E12.4*  BOUND*E12.4)
C-----CONSTRUCT COMPLETE SOLUTION FOR KEYS  IN BETA(M+1)....
      IF(L.EQ.0) GOTO 151
      BNDJ=1.E70
      KEY=.TRUE.
      DO 150 K=1,L
C-----CHECK PACKET HAS BASIC COLS
      SUM= 0.0
      NB =  MOD (KEYS(K),100)
      IF(NB .EQ.0 )  GO TO  115
C-----SUM BASIC COL VALUES IN PACKET K
      DO 110 I=1,M
      JPOS = IBASIS(I)/100
      IF(NPKT(JPOS).EQ.K) SUM=SUM+BETA(I)
 110  CONTINUE
 115  BETA(M+K) =  RHS(M+K)-SUM
      IF(BETA(M+K).GE.-ZERO) GOTO 150
C-----INFEASIBLE GUB, MUST BE ESSENTIAL, CHANGE TO BASIC ROW I
      JOUT=KEYS(K)/100
      IF(MOD(K3,13).EQ.0) WRITE(6,111) K,JOUT,BETA(M+K),BNDJ
 111  FORMAT(* INFEAS--GUB*I5*  COL*I5*  VALUE*E12.4*  BOUND*E12.4)
      CALL KEYCH(JOUT,I,B)
      GOTO 55
 150  CONTINUE
 151  CONTINUE
C-----TOTAL INFEASIBILITY
      BETA(M)=0.
      DO 160 I=1,MM1
      IF(IBASIS(I)/100.LE.NT) GOTO 160
      BETA(M)=BETA(M)-BETA(I)
 160  CONTINUE
C-----INDICATE PHASE 1
      IF(ABS(BETA(M)).LT.CTOL) GOTO 200
      IPHASE = 1
      IF(MOD(K3,13).EQ.0) WRITE(6,199) SUMIF,BETA(M)
 199  FORMAT(* TOTAL INFEASIBILITY*E12.4* PHASE1 COST*E12.4)
C-----ADJUST COST ROW          IC AND  ORIGIN IPI
 200  IC = ICOST
      IF(IPHASE.EQ.1)  IC = M
      IPI=1+M*IC-M
C-----PHASE 1 COST IS EQUALITY ZERO IN PHASE 2
      IBASIS(M)=100*(IBASIS(M)/100)
      IF(IPHASE.EQ.1) IBASIS(M)=IBASIS(M)+3
      RETURN
      END
```

```
      SUBROUTINE INVERT(B)
C------SUB VERSION APRIL/71
      COMMON /BOUNDS/ BOUNDS(100),IBDS(100),NBDS
      COMMON /STATE/ JBOS,IROW,JCOL,JOUT,ITRN,NREJ,NBTF,NDJS
      COMMON /TOLS/ DJTOL,ZERO,PIVTOL,CTOL,PERTOL,DEPTOL
      COMMON /PARAMS/ TMAX,ITNINV,INVF,K1,K2,K3,K4,ITNCHK
      COMMON /BASIS/ IBASIS(101),KEYS(101)
      COMMON /A/ ALPHA(101) /B/ BETA(1 1) /C/ GAMMA(101) /D/ DELTA(101)
      COMMON /LIMS/ MAXTRY,NTRY,JNCORE,NCRMAX,MSCAN
      COMMON /I/ M,L,MPL,MC,NT,ICOST,IC,IPHASE,JPHS,IPI
      COMMON /CORE/ JAREJ(101),JA(101),JAK(101),AJ(1000)
      COMMON /NAMES/ NAME(100)
      COMMON /PHS/ PHS(100)
      REAL B(1)
      INTEGER PKT,PKTO
      LOGICAL BASIC,ATBND
      ITB(J)=MOD(IBASIS(J),100)
      NPKT(J)=MOD(NAME(J),100000)/10
C-----INVERTS CURRENT BASIS VECTORS AND ADJUSTS FOR BOUNDS
      IF(ITRN.LT.ITNINV) RETURN
      CALL MESSG(40HTNVERT                                    )
C-----ITERATION OF NEXT INVERT
      ITNINV=ITRN+INVF
C
      IF(L.EQ.0) GOTO 15
C-----COUNT MISSING KEYS TO NKM AND CLEAR BASIC COUNT
      NKM=0
 0    DO 5 I=1,L
      K=KEYS(I)/100
      IF(K.EQ.0) NKM=NKM+1
      KEYS(I)=100*K
 5    CONTINUE
      IF(NKM.EQ.0) GOTO 15
C-----FIRST SCAN BASIC COLS FOR KEY CANDIDATES
      JTAG=2
 6    CONTINUE
      DO 10 J=MC,NT
      K=NPKT(J)
      IF(K.EQ.0) GOTO 10
      JTYPE=MOD(NAME(J),10)
      IF(JTYPE.NE.JTAG) GOTO 10
      IF(KEYS(K)/100.NE.0) GOTO 10
C-----SET COLUMN J KEY IN PACKET K AND REDUCE COUNT NKM
      KEYS(K)=100*J
      CALL SETKEY(J)
      NKM=NKM-1
 10   CONTINUE
      IF(NKM.EQ.0) GOTO 15
      IF(JTAG.NE.2) GOTO 11
C-----NOW EXAMINE FREE COLUMNS
      JTAG=1
      GOTO 6
 11   CONTINUE
      CALL ERROR(40HTNVERT--SEVERAL KEYS UNMARKED-DATA ERR.   )
      CALL ESCAPE(B)
C
C-----NULL BASIS EXCEPT FOR FREE ROWS SAVING TYPES
```

```
 15   CONTINUE                                                          20014600
      IORG=0                                                            20014610
      DO 20 I=1,M                                                       20014620
      GAMMA(I)=0.0                                                      20014630
      ITYPE=MOD(IBASIS(I),100)                                          20014640
      IF(ITYPE.NE.3) IBASIS(I)=ITYPE                                    20014650
C-----SET UP UNIT BASIS AND ZERO RHS                                    20014660
      DO 19 J=1,M                                                       20014670
 19   B(IORG+J)=0.                                                      20014680
      B(IORG+I)=1.0                                                     20014690
 20   IORG=IORG+M                                                       20014700
C-----RESTORE PHASE1 LOGICAL                                            20014710
      IBASIS(M)=100*MC+ITYPE                                            20014720
C                                                                       20014730
C-----CYCLE COLUMN NAMES, KEY COLUMNS TO KORG, OTHERS TO JORG           20014740
      JORG=M*JNCORE                                                     20014750
      KORG=JORG+M                                                       20014760
C-----PKT IS CURRENT GUP PACKET, PKTO IS PACKET OF LAST KEY             20014770
      PKTO=0                                                            20014780
      DO 200 JNT=1,NT                                                   20014790
      JTYPE= MOD( NAME(JNT),10)                                         20014800
      IF(JTYPE.LE.1) GOTO 200                                           20014810
C-----GET THIS BASIC/BOUNDED/KEY COL TO CORE                            20014820
      JPOS=JNT                                                          20014830
 30   CALL IN(JPOS,AJ(JORG+1),JNCORE+1)                                 20014840
      PKT=NPKT(JNT)                                                     20014850
      IF(JTYPE.GE.3) GOTO 150                                           20014860
C-----BASIC COLUMN, IS KEY NEEDED                                       20014870
      IF(PKT.EQ.0) GOTO 120                                             20014880
      IF(PKT.EQ.PKTO) GOTO 100                                          20014890
C-----GET KEY AND RECORD                                                20014900
      CALL INPCKD(KEYS(PKT)/100,AJ(KORG+1),JNCORE+2)                    20014910
      PKTO=PKT                                                          20014920
C-----REMOVE KEY COMPONENT FROM COL                                     20014930
 100  DO 110 I=1,M                                                      20014940
 110  AJ(JORG+I)=AJ(JORG+I)-AJ(KORG+I)                                  20014950
C-----TRANSFORM TO CURRENT BASIS                                        20014960
 120  IORG=1                                                            20014970
      DO 130 I=1,M                                                      20014980
      ALPHA(I)=DOT(M,B(IORG),AJ(JORG+1))                                20014990
 130  IORG=IORG+M                                                       20015000
C-----FIND BEST ROW TO PIVOT                                            20015010
      IROW=0                                                            20015020
      CALL PIVOT(IROW,B,ALPHA)                                          20015030
      IF( IROW.EQ.0) GOTO 200                                           20015040
C-----INCREASE COUNT OF BASIC COLS IN PACKET                            20015050
      IF(PKT.NE.0) KEYS(PKT)=KEYS(PKT)+1                                20015060
      GOTO 200                                                          20015070
C                                                                       20015080
C-----PICK UP BOUND OR PHS OF PACKET                                    20015090
 150  IF(PKT.NE.0) GOTO 155                                             20015100
      BNDJ=BOUND(JPOS)                                                  20015110
      GOTO 156                                                          20015120
 155  BNDJ=RHS(PKT+M)                                                   20015130
 156  DO 160 J=1,M                                                      20015140
 160  GAMMA(J) = GAMMA(J)- AJ(JORG+J)*BNDJ                              20015150
 200  CONTINUE                                                          20015160
C                                                                       20015170
```

```
C-----COMPLETE BASIS WITH ARTIFICIALS
C-----COUNT LOGICALS IN JL
      JL=0
      DO  210 I=1,M
      IF(MOD(IBASIS(I),100).NE.J) JL=JL+1
      IF( IBASIS(I)/100.NE.0 ) GOTO 210
      IF(MOD(IBASIS(I),100) .NE.1) GOTO 205
C-----MAKE A LOGICAL BASIC INSTEAD
      IBASIS(I)=100*JL+IBASIS(I)
      GOTO 210
 205  CONTINUE
      IBASIS(I)=100*(I+NT)+IBASIS(I)
 210  CONTINUE
C-----ADD ARTIFICIALS NEEDED
      DO 220 I=1,M
 220  DELTA(I)=0.0
      DELTA(M)=1.0
      DO 240 I=1,M
      IF(IBASIS(I)/100.LE.NT) GOTO 240
C-----ONE NEEDED ROW I
      DELTA(I)=1.0
      IOPG=1
      DO 230 J=1,M
      ALPHA(J)= DOT(M,B(IOPG),DELTA)
 230  IOPG=IOPG+M
      DELTA(I)=0.0
      CALL PIVOT(I,B,ALPHA)
 240  CONTINUE
C
C-----NOW USE B AND GAMMA TO GET SOLUTION TO BETA
      CALL FEASCH(B)
      RETURN
      END
```

```
      SUBROUTINE  ID(KOL, ALPHA, NAME)                                  20015510
C-----GUB VERSION--APRIL-20-1971                                        20015520
C-----WRITES TWO FILES OF A MATRIX TO DISC   IN  STRAIGHT OR PACKED FORM20015530
      COMMON /FILES/ IA1,IA2,IMAP                                       20015540
      COMMON /I/ M,L,MPL,MC,NT,ICOST,IC,IPHASE,JRHS,IPI                 20015550
      COMMON /ROWTYP/ IROWTP(101)                                       20015560
      COMMON /LIMS/ MAXTRY,NTRY,JNCORE,NCRMAX,NSCAN                     20015570
      COMMON /CORE/ JAREJ(101),JA(101),JAK(101),AJ(1000)                20015580
      DIMENSION ALPHA(1),ID(100),D(100)                                 20015590
      COMMON /B/ ALPHB(100)                                             20015600
      DATA ZERO/1.E-10/                                                 20015610
C                                                                       20015620
      ENTRY  OUT                                                        20015630
C----------------TO DISC FILES IA1/IA2                                  20015640
C                                                                       20015650
      IF (KOL.GT.1)  GOTO 10                                            20015660
      REWIND IA1                                                        20015670
      REWIND IA2                                                        20015680
      KOL1=KOL2=0                                                       20015690
C                                                                       20015700
C-----STRIP GUBS AND PACK  FOR TWO FILES                                20015710
 10   J=K=0                                                             20015720
      DO 20  I=1, M                                                     20015730
      IF( IROWTP(I).EQ.4 )  GOTO  20                                    20015740
      J=J+1                                                             20015750
      ALPHB(J)=ALPHA(I)                                                 20015760
      IF(ABS(ALPHA(I)).LT.ZERO) GOTO 20                                 20015770
      K=K+1                                                             20015780
      ID(K)=J                                                           20015790
      D(K)=ALPHA(I)                                                     20015800
 20   CONTINUE                                                          20015810
      NAME=KOL                                                          20015820
      WRITE(IA1) KOL,NAME,(ALPHB(I),I=1,J)                              20015830
      WRITE(IA2) KOL,NAME,K,(ID(I),D(I),I=1,K)                          20015840
      RETURN                                                            20015850
C                                                                       20015860
C                                                                       20015870
      ENTRY  IN                                                         20015880
C---------------FOR NORMAL COLUMNS FROM DISC IA1                        20015890
      DO 100 JNT=1,NT                                                   20015900
      IF(MOD(KOL1,NT).NE.0) GOTO 110                                    20015910
 99   REWIND IA1                                                        20015920
      REWIND IA2                                                        20015930
      NSCAN =1+NSCAN                                                    20015940
 110  READ(IA1) KOL1,NAAM,(ALPHA(I),I=1,M)                              20015950
      IF(KOL.LT.KOL1) GOTO 99                                           20015960
      IF(KOL.EQ.KOL1) GOTO 101                                          20015970
 100  CONTINUE                                                          20015980
      GOTO 300                                                          20015990
 101  CONTINUE                                                          20016000
C-----UPDATE RECORDS  AND TRACK  DISC LOCATION IN KOL                   20016010
 120  CONTINUE                                                          20016020
      JCOL=NAME                                                         20016030
      JA(JCOL)=KOL                                                      20016040
      JAK(JCOL)= NAAM                                                   20016050
      JAREJ(JCOL)=0                                                     20016060
      RETURN                                                            20016070
```

```
C
C
      ENTRY INPOS
C-----TO GET THE INPUT FILE POSITION
      KOL=KOL1
      RETURN
C
C
      ENTRY INPCKD
C-------------AUXILIARY FILE FOR KEYS
      DO 200 JNT=1,NT
      IF( MOD(KOL2,NT).NE.0) GOTO 199
 195  REWIND IA2
 199  READ(IA2) KOL2,NAAM,K,(ID(I),D(I),I=1,K)
      IF(KOL.LT.KOL2) GOTO 195
      IF(KOL2.EQ.KOL) GOTO 201
 200  CONTINUE
      GOTO 300
 201  CONTINUE
C-----UNPACK D TO ALPHA
      DO 210 I=1,M
 210  ALPHA(I)=0.
      IF(K.EQ.0) GOTO 120
      DO 220 I=1,K
      J=ID(I)
 220  ALPHA(J)=D(I)
      GOTO 120
C
C-----TROUBLE
 300  CALL ERROR (40HIO--COLUMN NOT LOCATED IN NT READS          )
      CALL ESCAPE( 8 )
      END
```

```
      SUBROUTINE KEYCH(JCOL,IROW,B)                                     20016400
C------GUB VERSION APRIL/71                                             20016410
      COMMON /I/ M,L,MPL,MC,NT,ICOST,IC,IPHASE,JRHS,IPI                 20016420
      COMMON /BASIS/ IBASIS(101),KEYS(101)                              20016430
      COMMON /NAMES/ NAME(100)                                          20016440
      COMMON /A/ ALPHA(101) /B/ BETA(101) /C/ GAMMA(101) /D/ DELTA(101) 20016450
      REAL B(1)                                                         20016460
      NPKT(J)=MOD(NAME(J),100000)/10                                    20016470
      ITP(J)=MOD(IBASIS(J),100)                                         20016480
C                                                                       20016490
C-----INTERCHANGE KEY WITH FIRST BASIC COL IN KEYS PACKET               20016500
C     RETURNING ROW OF NEW BASIC COL (OLD KEY)                          20016510
      JCOLPK= NPKT(JCOL)                                                20016520
C-----FIRST BASIC COL                                                   20016530
      DO 10 I=1,M                                                       20016540
      JKEY  = IBASIS(I)/100                                             20016550
      IF(JKEY.GT.NT) GOTO 10                                            20016560
      IF(NPKT(JKEY).EQ.JCOLPK) GOTO 20                                  20016570
 10   CONTINUE                                                          20016580
      CALL ERROR(40HKEYCH--ESSENTIAL PACKET NO BASIC COL        )       20016590
      CALL ESCAPE                                                       20016600
C                                                                       20016610
C-----RE-DIFFERENCE BASIS INVERSE TO MAKE JKEY KEY                      20016620
 20   IROW = I                                                          20016630
      JORG = M*IROW-M                                                   20016640
      DO 30 J=1,M                                                       20016650
 30   B(JORG+J) =-B(JORG+J)                                             20016660
      IORG = 0                                                          20016670
      DO 50 I=1,M                                                       20016680
      IF(I.EQ.IROW) GOTO 50                                             20016690
      IB=IBASIS(I)/100                                                  20016700
      IF(IB.GT.NT) GOTO 50                                              20016710
      IF(NPKT(IB).NE.JCOLPK) GOTO 50                                    20016720
      DO 40 J=1,M                                                       20016730
 40   B(JORG+J)=B(JORG+J)-B(IORG+J)                                     20016740
 50   IORG=IORG+M                                                       20016750
C                                                                       20016760
C-----NEW KEY IS NOW JKEY                                               20016770
      CALL SETKEY(JKEY)                                                 20016780
      KEYS(JCOLPK)= 100*JKEY+ MOD(KEYS(JCOLPK),100)                     20016790
C-----COL JCOL IS NOW BASIC                                             20016800
      CALL SETBNB(JCOL)                                                 20016810
      IBASIS(IROW)=100*JCOL+ITP(IROW)                                   20016820
C-----REARRANGE SOLUTION                                                20016830
      MPK=M+JCOLPK                                                      20016840
      SUM=ALPHA(IROW)                                                   20016850
          ALPHA(IROW)=ALPHA(MPK)                                        20016860
                      ALPHA(MPK)=SUM                                    20016870
      SUM= BETA(IROW)                                                   20016880
           BETA(IROW)=BETA(MPK)                                         20016890
                      BETA(MPK)=SUM                                     20016900
      RETURN                                                            20016910
      END                                                               20016920
```

```
      FUNCTION KEYEND(PKT)
      COMMON /CORE/ JAREJ(101),JA(101),JAK(101),AJ(1000)
      COMMON /LIMS/ MAXTRY,NTRY,JNCORE,NCRMAX,NSCAN
      COMMON /NAMES/ NAME(100)
      COMMON /BASIS/ IBASIS(101),KEYS(101)
      INTEGER PKT
      NPKT(I)=MOD(NAME(I),100000)/10
C
C-----GIVEN PACKET NO. PKT, FIND ITS KEY IN CORE
      IF(PKT.EQ.0) GOTO 100
      KEY=KEYS(PKT)/100
      DO  20 K=1,JNCORE
      IF(JA(K).EQ.KEY) GOTO 30
 20   CONTINUE
      KEYEND=0
      RETURN
 30   KEYEND=K
      RETURN
C
C-----FIND THE FIRST KEY WITH NO COLUMNS IN CORE FOR CKECK
 100  DO 130 K=1,JNCORE
      JAK=JA(K)
      JTYPE=MOD(NAME(JAK),10)
      IF(JTYPE.NE.4) GOTO 130
      JPKT=NPKT(JAK)
      DO 120 J=1,JNCORE
      JAJ=JA(J)
      JTYPE=MOD(NAME(JAJ),10)
      IF(JTYPE.EQ.4) GOTO 120
      IF(JPKT.EQ.NPKT(JAJ)) GOTO 130
 120  CONTINUE
      GOTO 30
 130  CONTINUE
      KEYEND=0
      RETURN
      END
```

```
      SUBROUTINE MAPIN(B)                                               20017290
C-----GUB VERSION  APRIL 20/71                                          20017300
C-----ADDS SPECS FOR BOUND/BASIC/NULL/KEY VARIABLES AND INVERSE IF PRESE20017310
C-----OPTIONALLY CALLED BEFORE INVERT                                   20017320
      COMMON /STATE/ JPOS,IROW,JCOL,JOUT,ITRN,NREJ,NPIF,NDJS            20017330
      COMMON /BASIS/ IBASIS(101),KEYS(101)                              20017340
      COMMON /A/ ALPHA(101) /B/ BETA(101) /C/ GAMMA(101) /D/ DELTA(101) 20017350
      COMMON /I/ M,L,MPL,MC,NT,ICOST,IC,IPHASE,JRHS,IPI                 20017360
      COMMON /FILES/ IA1,IA2,IMAP                                       20017370
      COMMON /INPUT/INPUT,INPUTM,INPUTN                                 20017380
      COMMON /TOLS/ DJTOL,ZERO,PIVTOL,CTOL,PERTOL,DERTOL                20017390
      COMMON /NAMES/ NAME(100)                                          20017400
      COMMON /BOUNDS/ BOUNDS(100),IBDS(100),NBDS                        20017410
      COMMON /PARAMS/ TMAX,ITNINV,INVF,K1,K2,K3,K4,K5                   20017420
      REAL B(1)                                                         20017430
      DIMENSION CARD(8)                                                 20017440
      INTEGER NAMES(5)                                                  20017450
      INTEGER PKT                                                       20017460
      REAL NULL,KEE,INVERS                                              20017470
      DATA  BASIC/5HBASIC/,ATBND/5HATBND/,ENDER/5HEND  /,ROWS/4HROWS/   20017480
     +      ,NULL/4HNULL/, KEE/3HKEY/,INVERS/5HINVER/                   20017490
     +        ,REWIND/6HREWIND/                                         20017500
      ITP(J)=MOD(IBASIS(J),100)                                         20017510
      NPKT(I)= MOD(NAME(I),100000)/10                                   20017520
C-----SETS BASIC COLUMNS AND LOGICALS                                   20017530
      CALL MESSG(40HMAPIN                                     )         20017540
      REWIND IMAP                                                       20017550
 10   READ(IMAP ,11) TYPE1,TYPE2,(NAMES(J),J=1,4)                       20017560
 11   FORMAT(2A5,4I10)                                                  20017570
      IF(MOD(K3,3).EQ.0) WRITE(6,12) TYPE1,TYPE2,(NAMES(J),J=1,4)       20017580
 12   FORMAT(X,2A5,4I10)                                                20017590
      IF(TYPE1.EQ.BASIC)  GOTO 30                                       20017600
      IF(TYPE1.EQ.KEE)  GOTO  50                                        20017610
      IF(TYPE1.EQ.ATBND) GOTO 15                                        20017620
      IF(TYPE1.EQ.NULL)  GOTO 80                                        20017630
      IF(TYPE1.EQ.INVERS) GOTO 95                                       20017640
      IF(TYPE1.EQ.ENDER)  RETURN                                        20017650
      CALL ERROR(40HMAPIN--UNRECOGNIZED TYPE CARD IN DATA     )         20017660
      RETURN                                                            20017670
C                                                                       20017680
C-----ADD AT BOUND COLUMN SPECS                                         20017690
 15   DO 20 J=1,4                                                       20017700
      ID=NAMES(J)                                                       20017710
      IF(ID.EQ.0) GOTO 20                                               20017720
      ID=ID+MC                                                          20017730
      BNDJ=BOUND(ID)                                                    20017740
      IF(BNDJ.LT.1.E8)  GOTO 19                                         20017750
      CALL ERROR(40HMAPIN--ATBND COLUMN NOT BOUNDED IBDS/BDS    )       20017760
      CALL DUMP(IBDS(1),IBDS(NBDS),2,BOUNDS(1),BOUNDS(NBDS),1)          20017770
      GOTO 20                                                           20017780
 19   CONTINUE                                                          20017790
      CALL SETBND(ID)                                                   20017800
 20   CONTINUE                                                          20017810
      GOTO 10                                                           20017820
C                                                                       20017830
C-----BASIC COLUMNS ADDED                                               20017840
 30   IF(TYPE2.EQ.ROWS) GOTO 60                                         20017850
```

```
      DO 40 J=1,4
      ID=NAMES(J)
      IF(ID.EQ.0) GOTO 40
      ID=ID+MC
      CALL SETBNB(ID)
 40   CONTINUE
      GOTO 10
C
C-----ENTER KEY COLUMNS IF A SUB PROBLEM
 50   IF(L.EQ.0) GOTO 30
      DO 55 I=1,4
      ID=NAMES(I)
      IF ( ID.EQ.0 ) GOTO  10
      ID=ID+MC
      PKT=NPKT(ID)
      IF(PKT.EQ.0) GOTO 55
      JOUT=KEYS(PKT)/100
      IF(JOUT.NE.0) CALL SETKEY(-JOUT)
      CALL SETKEY(ID)
      KEYS(PKT)=100*ID
 55   CONTINUE
      GOTO 10
C
C-----BASIC ROW-COL DATA FOR ENTRY OF ROW LOGICALS
 60   DO 70 J=1,4
      ID=NAMES(J)
      IF(ID.EQ.0)GOTO 70
      CALL SETBNB(ID)
 70   CONTINUE
      GOTO 10
C
C-----SET NULL COLUMNS
 80   DO 90 J=1,4
      ID=NAMES(J)
      IF(ID.EQ.0) GOTO 90
      ID=ID+MC
      CALL SETNNN(ID)
 90   CONTINUE
      GOTO 10
C
C-----CHECK FOR INVERSE AT END OF INPUT TAPE OR SKIP
 95   MM=M*M
      READ(INPUT) (B(J),J=1,MM)
      IF(ENDFILE INPUT) 10,96
 96   READ(INPUT) (TBASIS(J),BETA(J),J=1,M)
      IF(ENDFILE INPUT) 10,97
 97   IF(L.NE.0) READ(INPUT) (KEYS(J),BETA(J+M),J=1,L)
      IF(ENDFILE INPUT) 10,98
C-----SUCCESSFULL, SUPPRESS INVERT
 98   ITNINV=INVF/2
      CALL MSSG(40HSTARTED FROM GIVEN INVERSE ON INPUT          )
C-----RESET INPUT FILE FOR MAPOUT TO OVERWRITE LAST INVERSE
      BACKSPACE INPUT
      BACKSPACE INPUT
      IF(L.EQ.0) GOTO 10
      BACKSPACE INPUT
      GOTO 10
C
```

```
C
      ENTRY INMAP                                                       20018440
C-----READS MAP CARDS FROM INPUT TO FILE IMAP AND TERMINATES THEM       20018450
      CALL MSSG(40HINMAP LOOKED FOR  MAP                                20018460
      DO 200 I=1,1000                                                   20018470
      READ(5,2) CARD                                                    20018480
      IF(ENDFILE 5) 201,199                                             20018490
 199  CONTINUE                                                          20018500
 2    FORMAT(8A10)                                                      20018510
      IF (CARD(1).EQ.ENDER) GOTO 201                                    20018520
      IF(CARD(1).EQ.REWIND)  GOTO 202                                   20018530
      WRITE(IMAP,2) CARD                                                20018540
 1999 CONTINUE                                                          20018550
 200  CONTINUE                                                          20018560
C-----ENDS THE MAPOUT CARDS                                             20018570
 201  WRITE(IMAP,2)  ENDER                                              20018580
      RETURN                                                            20018590
 202  REWIND IMAP                                                       20018600
      CALL MESSG(40HINMAP--DELETED EXISTING MAP,  IF ANY                20018610
      GOTO 1999                                                         20018620
      END                                                               20018630
                                                                        20018640
```

```
      SUBROUTINE MAPOUT(B)
C-----SUB VERSION  APRIL-20-71
C-----OUTPUTS THE FINAL BASIS FOR MARTN USE
C
      COMMON /NAMES/ NAME(100)
      COMMON /BASIS/ BASIS(101),KEYS(101)
      COMMON /A/ ALPHA(101) /B/ BETA(101) /C/ GAMMA(101) /D/ DELTA(101)
      COMMON/IXX/IX(100) /XX/ X(100)
      COMMON /INPUT/INPUT,INPUTM,INPUTN
      COMMON /FILES/ IA1,IA2,IMAP
      COMMON /I/ M,L,MPL,MC,NT,ICOST,IC,IPHASE,JRHS,IPI
      COMMON /LIMS/ MAXTRY,NTRY,JNCORE,NCPMAX
      COMMON /CORE/ JAREJ(101),JA(101),JAK(101),AJ(1000)
      COMMON /PARAMS/ TMAX,ITNINV,TNVF,K1,K2,K3,K4,K5
      COMMON /BOUNDS/ BOUNDS(100),IBDS(100),NBDS
      EQUIVALENCE (MAPKEY,AJ)
      DIMENSION MAPBAS(100),MAP BND(10 ),MAPNLL(10),MAPKEY(1000)
      REAL B(1)
C
      CALL MESSG(40HMAPOUT                                    )
      REWIND IMAP
      JNCORE=0
      DO 50 I=1,MC
      IF(NAME(I).NE.2) GOTO 50
      WRITE(IMAP,1) I
 1    FORMAT(10HBASICROWS  ,I10)
 50   CONTINUE
C
      K=INLL=IBND=IBAS=IKEY=0
C-----CLEAR SOLUTION SPACE
      NVARS=TNPJTM+NBDS
      DO 60 I=1,NVARS
      IX(I)=0
 60   X(I)=0.
      MP1=MC+1
      DO 40 I=MP1,NT
      JCOL=I-MC
      J=MOD(NAME(I),10)+1
      GOTO(10,40,20,30,35),J
C
 10   INLL=INLL+1
      MAPNLL(INLL)=JCOL
      GOTO 40
 20   IBAS=IBAS+1
      MAPBAS(IBAS)=JCOL
      DO 25 IP=1,M
      IF(IBASIS(IP)/100.EQ.I) GOTO 26
 25   CONTINUE
 26   K=K+1
      IX(K)=JCOL
      X(K)=BETA(IP)
      GOTO 40
 30   IBND=IBND+1
      MAPBND(IBND)=JCOL
      K=K+1
      IX(K)=JCOL
      X(K)=BOUND(I)
```

```
      GOTO 40                                                           20019220
 35   IKEY=IKEY+1                                                       20019230
      MAPKEY(IKEY)=JCOL                                                 20019240
      DO 36 IR=1,L                                                      20019250
      IF(KEYS(IR)/100.EQ.I) GOTO 37                                     20019260
 36   CONTINUE                                                          20019270
 37   K=K+1                                                             20019280
      IX(K)=JCOL                                                        20019290
      X(K)=BETA(IR+M)                                                   20019300
 40   CONTINUE                                                          20019310
      IF(IBAS.NE.0) WRITE(IMAP,2) (MAPBAS(I),I=1,IBAS)                  20019320
      IF(IBND.NE.0) WRITE(IMAP,3) (MAPBND(I),I=1,IBND)                  20019330
      IF(INLL.NE.0) WRITE(IMAP,4) (MAPNLL(I),I=1,INLL)                  20019340
      IF(IKEY.NE.0) WRITE(IMAP,6) (MAPKEY(I),I=1,IKEY)                  20019350
 2    FORMAT(10HBASIC      ,4I10)                                       20019360
 3    FORMAT(10HATBND      ,4I10)                                       20019370
 4    FORMAT(10HNULL       ,4I10)                                       20019380
 5    FORMAT(10HEND            )                                       20019390
 6    FORMAT(10HKEY        ,4I10)                                       20019400
 7    FORMAT(10HINVERSE        )                                       20019410
      IF(MOD(K3,2).NE.0) GOTO 598                                       20019420
C-----PLACE BASIS ON END OF INPUT TAPE, AFTER ANY THERE ALREADY         20019430
      MM=M*M                                                            20019440
      WRITE(INPUT) (B(I),I=1,MM)                                        20019450
      WRITE(INPUT) (IBASIS(J),BETA(J),J=1,M)                            20019460
      IF(L.NE.0) WRITE(INPUT) (KEYS(J),BETA(J+M),J=1,L)                 20019470
      WRITE(IMAP,7)                                                     20019480
 598  WRITE(IMAP,5)                                                     20019490
 599  IF(MOD(K3,5).NE.0) RETURN                                         20019500
 600  WRITE(6,601)                                                      20019510
 601  FORMAT(*0CURRENT SOLUTION*/*0        BASIS        VALUE        -PI*)20019520
      WRITE(6,602) (IBASIS(I),BETA(I),B(IPI+I-1),I=1,M)                 20019530
 602  FORMAT(I12,2E12.4)                                                20019540
      WRITE(6,603) (KEYS(I),BETA(I+M),I=1,L)                            20019550
 603  FORMAT(*0         KEYS        VALUE*/(I12,E12.4))                 20019560
      WRITE(6,604) (IX(I),X(I),I=1,K)                                   20019570
 604  FORMAT(*0SOLUTION VECTOR, PACKED*/(I12,E12.4))                    20019580
C-----PRICE OUT REMAINING VECORS                                        20019590
      WRITE(6,701)                                                      20019600
 701  FORMAT(*0REMAINING VECTORS*)                                      20019610
      DO 700 J=MP1,NT                                                   20019620
      JTYPE=MOD(NAME(J),10)                                             20019630
      IF(JTYPE.EQ.2) GOTO 700                                           20019640
      CALL IN(J,GAMMA,1)                                                20019650
      DJVAL=DOTS(M,B(IPI),GAMMA)                                        20019660
      WRITE(6,702) J,DJVAL,NAME(J)                                      20019670
 702  FORMAT(I12,12X,E12.4,I12 )                                        20019680
 700  CONTINUE                                                          20019690
      RETURN                                                            20019700
      END                                                               20019710
```

```
      SUBROUTINE PIVOT(IROW,B,ALPHA)
C-----PIVOT ALPHA INTO B ROW IROW
      COMMON /NAMES/ NAME(100)
      COMMON /BASIS/ IBASIS(101),KEYS(101)
      COMMON /STATE/ JROS
      COMMON /T/ M,L,MPL,MC,NT,ICOST,IC,IPHASE,JRHS,IPI
      COMMON /TOLS/ DJTOL,ZERO,PIVTOL,CTOL,PERTOL,DERTOL
      COMMON /PARAMS/ TMAX,ITNINV,INVF,K1,K2,K3,K4,K5
      REAL ALPHA(1),B(1)
      NPKT(I)=MOD(NAME(I),100000)/10
C
C-----CHECK ALPHA HAS A ROW
      IF(IROW.EQ.0) GOTO 90
C-----NORMALISE ROW  IROW
 1    CONTINUE
      IORG=M*(IROW-1)
      PIV=1.
      IF (ALPHA(IROW).EQ.1.0)  GOTO   20
      IF( ABS(ALPHA(IROW) ).GT.PIVTOL) GOTO 5
      CALL ERROR(40HPIVOT--PIVOT LESS THAN PIVTOL                )
      CALL ESCAPE(8)
 5    PIV   = 1.0/ALPHA(IROW)
      DO 10 I=1,M
 10   B(IORG+I)= B(IORG+I)*PIV
C-----PIVOT OR FOR ROW I,  LEAVE  ALPHA.
 20   DO 30 I=1,M
      IF( I.EQ.IROW) GOTO 30
      IF( ABS( ALPHA(I)).LT.ZERO) GOTO 30
      JORG=M*(I-1)
      PIV=ALPHA(I)
      DO 25 J=1,M
 25   B(JORG+J)=B(JORG+J)-PIV *B(IORG+J)
 30   CONTINUE
      RETURN
C
C-----FIND BEST ROW TO PIVOT ALPHA INTO B
 90   CONTINUE
      PIV=PIVTOL
      DO 100 I=1,M
C-----CHECK FOR FREE LOGICALS
      JP=IBASIS(I)/100
      IF(JP.NE.JROS) GOTO 99
      IROW=I
      GOTO 1
 99   IF(JP.NE.0) GOTO 100
C-----ZERO BASIS ENTRY AT I
      DIVOT=ABS(ALPHA(I))
      IF(DIVOT.LT.PIV) GOTO 100
      PIV=DIVOT
      IROW=I
 100  CONTINUE
      IF(IROW.EQ.0) GOTO 150
C-----BEST ROW TO ADD THIS COLUMN IS IROW
 101  CONTINUE
      IBASIS(IROW)=100*JROS+IBASIS(IROW)
      GOTO 1
C-----THE COLUMN IS NO GOOD ANYWHERE AT PRESENT, DROP FROM BASIC SET
```

```
150   CONTINUE
      CALL SETBNB(-JPOS)
      IF(MOD(K3,13).NE.0) RETURN
      WRITE(6,151)  JPOS
151   FORMAT(1H ,*PIVOT DROPPED COLUMN* I6     )
      RETURN
      END
```

```
      SUBROUTINE PRIMAL(B)
C------GUB VERSION APRIL/71
      COMMON  /MOVES/ THETA,BNDJ,DMAX,PRMLER,DUALER
      COMMON /TOLS/ DJTOL,ZERO,PIVTOL,CTOL,PERTOL,DERTOL
      COMMON /STATE/ JPOS,IROW,JCOL,JOUT,ITRN,NREJ,NPIF,NDJS
      COMMON /PARAMS/ TMAX,ITNINV,INVF,K1,K2,K3,K4,K5
      COMMON /LIMS/ MAXTPY,NTPY,JNCORE,NCRMAX,NSCAN
      COMMON /CORE/ JAPEJ(101),JA(101),JAK(101),AJ(1000)
      COMMON /T/ M,L,MPL,MC,NT,ICOST,IC,IPHASE,JRHS,IPI
      COMMON /A/ ALPHA(101) /B/ BETA(1 1) /C/ GAMMA(101) /D/ DELTA(101)
      COMMON /BASIS/ IBASIS(101),KEYS(101)
      COMMON /DJS/ DJ(100)
      COMMON /NAMES/ NAME(100)
      COMMON /RHS/ RHS(100)
      REAL B(1)
      LOGICAL BASIC,ATBND
      ITP(I)=MOD(IBASIS(I),10)
      ATBND(I)=MOD(NAME(I),10).EQ.3
      NPKT(J)=MOD(NAME(J),100000)/10
C
      CALL MESSG(4CHPRIMAL                                    )
C
      IROW=JCOL=NREJ=NDEG=0
      CALL STATUS(40HPRIMAL--BEGIN                            )
 3000 CONTINUE
C-----FIND THE COST ROW
      IC=ICOST
      IF ( IPHASE.EQ.1 )  IC= M
C-----KEEP PHASE1 COST ZERO IN PHASE 2
C-----PHASE 1 COST IS FREE IN PHASE 1
      IBASIS(M)=100*(IBASIS(M)/100)
      IF(IPHASE.EQ.1) IBASIS(M)=IBASIS(M)+3
C-----PICK UP NEW PI
      IPI=1+M*IC-M
C-----CUTOFF FOR DEGENERACY REJECTS
      NDEGLM=0
C
C*****BASIC CYCLE OF 2 PHASE LP***********
 1    ITRN=1+ITRN
      THETA=BNDJ=IROW=JCOL=JOUT=JPOS=0
C
C-----LOCATE PIVOTAL COLUMN
 30   CALL COLUMN( JCOL,B)
      IF( JCOL.NE.0)  GOTO 50
      CALL XCHECK(6HPRIMAL,44QUIT,P)
C
C-----OPTIMUM, CHECK MODE  = PHASE1/ PHASE2/ NOFEAS
      IF( IPHASE.EQ.2)  GOTO 2000
      IF(  ABS(BETA(IC)).LT.CTOL) GOTO 1000
      CALL  NO FEAS
      RETURN
C
C-----STEP PROCEDURE FOR  IN CORE COLUMN  JCOL
 50   CONTINUE
C-----LOCATE COLUMN  POSITION AND BOUND
      JPOS = JA(JCOL)
      BNDJ = BOUND(JPOS)
```

```
C
C-----LOCATE PIVOTAL ROW IROW AND STEP THETA
      CALL  ROW(THETA, IROW, JCOL, ITYPE,B)
      IF( IROW.NE.0)  GOTO 60
      CALL XCHECK(6HPRIMAL,4HQUIT,B)
      CALL UNBND
      RETURN
C
C
C-----DEGENERACY AND PIVOT CHECKS
 60   IF( ABS(ALPHA(IROW)).GE.PIVTOL)  GOTO 65
      IF(NREJ.LT.2) GOTO 62
      WRITE(6,61) JA(JCOL),IROW, ALPHA(IROW),BETA(IROW)
 61   FORMAT(20X,*REJECTED COLUMN*I5*  ROW*I5*  PIVOT*E12.4*  RHS*E12.4)
 62   CONTINUE
      JAREJ(JCOL)=1
      NREJ = 1+NREJ
      IF(NREJ.NE.5) GOTO 64
C-----RE-INVERT, CLEAR REJECTS AND CONTINUE
      ITNINV=ITRN
      CALL INVERT(B)
      DO 63 J=1,JNCORE
 63   JAREJ(J)=0
 64   CONTINUE
      IF(NREJ.LT.100) GOTO 30
      CALL ERROR(40HPRIMAL--TOO MANY REJECT VECTORS                )
C-----TRY ENDING IF PHASE 2
      IF(IPHASE.EQ.2) GOTO 2000
      CALL ESCAPE(B)
C
 65   IF( ABS(THETA*DJ(JCOL)).GE.CTOL) GOTO 70
      IF(NDJS.EQ.1) GOTO 70
      IF(NDEG.GE.NDEGLM) GOTO 70
      NDEG=1+NDEG
      JAREJ(JCOL)=1
      GOTO 30
C
C-----CHECK EXCEED BOUND ON JPOS---- XJPOS MOVES TO OR OFF BOUND
 70   CONTINUE
      CALL XCHECK(6HPRIMAL,3HEND,B)
      IF( ABS(THETA)+ZERO.LT.BNDJ)  GOTO 80
      ITYPE=1
C-----SUPPRESS PRICING NEXT TIME
      NREJ=1
C-----JOUT=0 KILLS STATUS PRINT
      JOUT=0
      IF(THETA.GE.0.0) GOTO 75
C-----XJPOS COMES OFF BOUND , THETA NEG.
      CALL SETBND(  -JPOS  )
      THETA= - BNDJ
      GOTO 90
C-----XJPOS GOES TO BOUND
 75   CALL SETBND( JPOS)
      THETA = BNDJ
      GOTO  90
C
C-----PICK UP REJECTED COL, C      OR KEY CHANGE
 80   CONTINUE
```

```
      JOUT=IBASIS(IROW)/100
      IF(IROW.LE.M) GOTO  800
C-----KEY CHANGE, CORRECT REJECTED COL AND CHECK ESSENTIL PACKET
      JOUT=KEYS(IROW-M)/100
      NBVPKT=MOD( KEYS(IROW-M),100)
      IF(NBVPKT.GT.0)GOTO  81
C-----CHANGE KEY FROM JOUT TO JPOS IN NON-ESSENTIAL PKT
      KEYS(IROW-M) = 100*JPOS
      CALL SET KEY(JPOS)
      CALL SET KEY(-JOUT)
C-----SET PARAMS FOR KEY STEP
      EPSI=THETA
C-----SUPPRESS PRICING NEXT TIME
      NREJ=1
      GOTO  90
C
C-----ESSENTIAL PACKET, CHANGE JOUT FROM KEY TO BASIC IN NEWROW
 81   CALL KEY CH(JOUT,NEWROW,B)
      IROW = NEWROW
C
C-----NORMAL PIVOT OPERATION
 800  CALL PIVOT(IROW,B, ALPHA )
C-----UPDATE KEY BASIS COUNTS FOR JPOS AND JOUT
      JPOSPK=NPKT(JPOS)
      IF(JPOSPK.EQ.0) GOTO  82
      KEYS(JPOSPK)= KEYS(JPOSPK)+1
 82   JOUTPK=NPKT(JOUT)
      IF(JOUT.GT.NT) GOTO 84
      IF(JOUTPK.EQ.0) GOTO  84
      KEYS(JOUTPK)= KEYS(JOUTPK)-1
 84   CONTINUE
C
C-----CHECK JPOS COMING OFF A BOUND (THETA.LE.0 )
      EPSI=THETA
      IF(ATBND(JPOS))  EPSI=BNDJ+THETA
C
C-----CHECK JOUT, MARK NEW AND UNMARK OLD BASIC COLS
      JOUT = IBASIS( IROW )/100
      IBASIS(IROW) = 100*JPOS+MOD(IBASIS(IROW),100)
      CALL SETBNB( JPOS)
      CALL SETBNB(-JOUT)
C-----ITYPE=2  IMPLIES JOUT OFF BOUND,  =3  IMPLIES  JOUT  TO BOUND
      IF(ITYPE.EQ.3) CALL SETBND(JOUT)
C-----RELEASE REJECTED VECTORS AFTER A PIVOT
      IF(NREJ+NDEG.EQ.0) GOTO 90
      NREJ=NDEG=0
      DO 85 I=1,JNCORE
C
C
C-----STEP BETA AND CONDITION COMPLETE PROBLEM  (OUR ROWS ARE LAST)
 85   JAREJ(I)=0
 90   DO  100 I=1,MPL
      BETA(I)=BETA(I)-THETA*ALPHA(I)
 100  CONTINUE
      IF(ITYPE.NE.1) BETA(IROW)= EPSI
      DO 110 I=1,M
      IF(ITP(I).EQ.3) GOTO 110
      IF(BETA(I).GE.0.0) GOTO 110
```

```
      BETA(I)=0.0                                                       20022090
 110  CONTINUE                                                          20022100
      DO 120 I=1,L                                                      20022110
      IF(BETA(I+M).GE.0.0) GOTO 120                                     20022120
      BETA(I+M)=0.0                                                     20022130
 120  CONTINUE                                                          20022140
      CALL STATUS(40HEND OF PRIMAL                                )     20022150
      GOTO 1                                                            20022160
C*****END OF BASIC PRIMAL CYCLE****************                         20022170
C                                                                       20022180
C-----OPTIMUM PHASE1 TERMINATION                                        20022190
 1000 CONTINUE                                                          20022200
      CALL OPT1                                                         20022210
      IPHASE=2                                                          20022220
      BETA(M)=0.0                                                       20022230
      GOTO 3000                                                         20022240
C                                                                       20022250
C-----OPTIMUM PHASE2 TERMINATION                                        20022260
 2000 CONTINUE                                                          20022270
      CALL OPT2                                                         20022280
C                                                                       20022290
      RETURN                                                            20022300
      END                                                               20022310
```

```
      SUBROUTINE  ROW(THETA,IROW,JCOL,ITYPE,B)
C-----OUR VERSION  APRIL 20/71
C-----FINDS STEP TO BOUND AND BOUND ENCOUNTERED
      COMMON /I/ M,L,MPL,MC,NT,ICOST,IC,IPHASE,JPHS,IPI
      COMMON /CORE/ JAREJ(101),JA(101),JAK(101),AJ(1000)
      COMMON /BASIS/ IBASIS(101),KEYS(101)
      COMMON /NAMES/ NAME(100)
      COMMON /A/ ALPHA(101) /B/ BETA(101) /C/ GAMMA(101) /D/ DELTA(101)
      COMMON /TOLS/ DJTOL,ZERO,PIVTOL,CTOL,PERTOL,DEPTOL
      LOGICAL BASIC,ATBND
      REAL B(1)
      ITP(J)=MOD(IBASIS(J),100)
      NPKT(J)=MOD(NAME(J),100000)/10
      ATBND(I)=MOD(NAME(I),10).EQ.7
C
C-----TRANSFORM SELECTED COLUMN
      JPOS= JA(JCOL)
C-----LOAD  COLUMN  TO DELTA (MAYBE NULL PACKET)
      JORG= M*JCOL-M
      DO 5  I=1,M
 5    DELTA(I)= AJ(JORG+I)
C-----NULL ELEMENTS IN LOWER ALPHA FOR PACKET ROWS
      DO 6  I=1,L
 6    ALPHA(I+M)=0.
C-----PACKET ROW HAS A UNITY
      JPKT= NPKT(JPOS)
      IF (JPKT.EQ.0)  GOTO 16
      ALPHA(JPKT+M)=1.
C-----FIND KEY AND KORG
      KORG=KEYFND(JPKT)
      IF(KORG.NE.0) GOTO 14
      CALL ERROR(40HROW--KEY NOT IN CORE                    )
      WRITE(6,998)JPKT,JCOL,JPOS
 998  FORMAT(1H+,40X,*PACKET*I5*  POSITION*I5*  COLUMN*I5)
      CALL ESCAPE(P)
      IROW=0
      RETURN
 14   CONTINUE
      KORG=M*KORG-M
      DO 15 I=1,M
 15   DELTA(I)=DELTA(I)-AJ(KORG+I)
C-----TRANSFORM REDUCED  COLUMN  IN LOWER ALPHA
 16   IORG=1
      DO 20 I=1,M
      ALPHA(I)  = DOT( M, B(IORG), DELTA)
 20   IORG=IORG+M
C-----SUM PACKET BASIC ENTRIES TO  ALPHA ELEMENTS
      IF(L.EQ.0) GOTO 26
      DO  25 I=1,M
      IB = IBASIS(I)/100
      IF(IB.GT.NT) GOTO 25
      K= NPKT( IB )
      IF(K.EQ.0) GOTO 25
      K=K+M
      ALPHA(K)=ALPHA(K)-ALPHA(I)
 25   CONTINUE
 26   CONTINUE
```

```
C
      THETA=1.E35
      IROW = 0
      ITYPE= 1
C
      IF(  ATBND(JPOS) )  GOTO 100
C
C-----X(JPOS) ZERO,  DJ  NEGATIVE ---INCREASE   X(JPOS)
      DO  50 I=1,MPL
      IF(I.LE.M .AND. ITP(I).EQ.3) GOTO 50
      IF (  ALPHA(I).LT.-ZERO)   GOTO  30
      IF (  ALPHA(I).GT. ZERO)   GOTO  10
      GOTO 50
C-----POSITIVE PIVOT
 10   STEP  = BETA(I)/ALPHA(I)
      IF(  STEP .GE. THETA )  GOTO   50
      THETA = STEP
      IROW  = I
      ITYPE = 2
      GOTO  50
C-----NEGATIVE PIVOT-----(  BOUND(JOUT).GE.BETA(I) )
 30   JOUT  =  IBASIS(I)/100
      IF(I.GT.M) JOUT=KEYS(I-M)/100
      STEP  =  ( BETA(I) - BOUND(JOUT) ) /  ALPHA(I)
      IF(  STEP .GE. THETA )  GOTO   5
      THETA =  STEP
      IROW  =  I
      ITYPE =  3
 50   CONTINUE
      GOTO  200
C
C-----X(JPOS) AT BOUND   DJ POS.--DECREASE  X(JPOS)
 100  DO 150  I=1,MPL
      IF(I.LE.M .AND. ITP(I).EQ.3) GOTO 150
      IF(  ALPHA(I).LT. - ZERO )    GOTO 130
      IF(  ALPHA(I).GT.   ZERO )    GOTO 110
      GOTO  150
C-----POSITIVE PIVOT----(  BOUND(JOUT).GE. BETA(I) )
 110  JOUT =  IBASIS(I)/100
      IF(I.GT.M) JOUT=KEYS(I-M)/100
      STEP= (  BETA(I)-BOUND(JOUT) )/(-ALPHA(I))
      IF( STEP. GE . THETA  )   GOTO  150
      THETA = STEP
      IROW  = I
      ITYPE = 3
      GOTO    150
C-----NEGATIVE PIVOT
 130  STEP=  BETA(I)/( -ALPHA(I) )
      IF( STEP  .GE. THETA)     GOTO  150
      THETA=  STEP
      IROW =  I
      ITYPE=  2
 150  CONTINUE
      THETA= -THETA
C-----PIVOTS ON 2,3,  2 DRIVES JOUT TO  ZERO , 3 MOVES JOUT TO BOUND
C
 200  RETURN
      END
```

```
      SUBROUTINE SETBND(I)                                              20023470
      COMMON /I/ M,L,MPL,MC,NT,ICOST,IC,IPHASE,JRHS,IPT                 20023480
      COMMON /NAMES/ NAME(100)                                          20023490
      K=3                                                               20023500
 100  CONTINUE                                                          20023510
      IF(I) 1,2,3                                                       20023520
 1    J=-I                                                              20023530
      IF(J.LE.NT) NAME(J)=10*(NAME(J)/10)+1                             20023540
 2    RETURN                                                            20023550
 3    IF(I.LE.NT) NAME(I)=10*(NAME(I)/10)+K                             20023560
      RETURN                                                            20023570
C                                                                       20023580
      ENTRY SETBNB                                                      20023590
      K=2                                                               20023600
      GOTO 100                                                          20023610
C                                                                       20023620
      ENTRY SETNNN                                                      20023630
      K=0                                                               20023640
      GOTO 100                                                          20023650
C                                                                       20023660
      ENTRY SETKEY                                                      20023670
      K=4                                                               20023680
      GOTO 100                                                          20023690
      END                                                               20023700
```

```
      SUBROUTINE SETUP
C------GUB VERSION APRIL/71
      INTEGER  PKT,PKT1
      COMMON /INPUT/INPUT,INPUTM,INPUTN
      COMMON /LIMS/ MAXTRY,NTRY,JNCORE,NCRMAX,NSCAN
      COMMON /I/ M,L,MPL,MC,NT,ICOST,IC,IPHASE,JRHS,IPI
      COMMON /A/ ALPHA(101) /B/ BETA(101) /C/ GAMMA(101)  /D/ DELTA(101)
      COMMON /POWTYP/ IROWTP(101) /NAMES/ NAME(100)
      COMMON /BASIS/ IBASIS(101),KEYS(101)
      COMMON /CORE/ JAREJ(101),JA(101),JAK(101),AJ(1000)
      COMMON /PARAMS/ TMAX,ITNINV,INVF,K1,K2,K3,K4,NWAJ
      COMMON /RHS/ RHS(100)
      COMMON /TOLS/ DJTOL,ZERO,PIVTOL,CTOL,PERTOL,DERTOL
      COMMON /STATE/ JPOS,IROW,JCOL,JOUT,ITRN,NREJ,NPIF,NDJS
      COMMON /BOUNDS/ BOUNDS(100),IBDS(100),NBDS
      COMMON / CV2 / T(100,10),B0(100),BLO(10),UBS(10),CO(10)
      COMMON /CV3/ MBBCAV,NBBCAV,NCHGS
C-----TAKES  INPUT A MATRIX IN COLUMNS OFF INPUT FILE BY COLUMNS
C-----INITIAL SETUP FOR COMPLETE PROBLEM IS CHANGED AT END TO REDUCED PR
C-----OUT DROPS GUB ROWS AS FOUND
      CALL MESSG(40HSETUP                                        )
C-----ACTUAL PROBLEM SIZES
      M= INPUTM+1
C-----TRY TO START IN PHASE 2
      IPHASE=2
      IC=ICOST
C-----TOLERANCES
      DJTOL=1.E-8
      ZERO=1.E-12
      PIVTOL=1.E-5
      CTOL=1.E-4
      PERTOL=1.E-5
      DERTOL=1.E-8
      NSCAN=NTRY=MAXTRY=NDJS=ITRN=JNCORE=0
C-----INVERT FREQUENCY INVF, ITERATION OF NEXT INVERT ITNINV
      INVF=100
      ITNINV=0
C
C
C-----FIRST M COLUMNS GIVE ROW LOGICALS AND TYPES
      DO 5 I=1,M
      KEYS(I)=0
 5    IBASIS(I)=0
C-----MARK PHASE1 COST ROW FREE FOR POSSIBLE USE IN PHASE 1
      IROWTP(M)=3
C-----SET UP LOGICAL VECTORS FOR THE ROWS
      DO  10 I=1,M
 10   ALPHA(I)=0.0
C-----NOW COUNT COLS WRITTEN
      NT=0
      DO 100 I=1,M
      ID=IROWTP(I)
      IF(ID.EQ.0)  GOTO 20
      IF(ID.EQ.1)  GOTO 21
      IF(ID.EQ.2)  GOTO 22
      IF(ID.EQ.3)  GOTO 23
      IF(ID.EQ.4) GOTO 24
```

```
 19   CALL ERROR(40H  SETUP--ROW TYPE ERROR--OUT OF RANGE              )
      CALL ESCAPE
C-----EQUALITY ROW- NO LOGICAL COL.
 20   GOTO 100
C-----LE. ROW- POSITIVE LOGICAL+SLACK
 21   ALPHA(I)=1.0
      K=1
      GOTO 50
C-----GE. ROW- NEGATIVE LOGICAL+SLACK
 22   ALPHA(I)=-1
      K=1
      GOTO 50
C-----FREE ROW-POSITIVE LOGICAL-BASIC
 23   ALPHA(I)=+1.
      IBASIS(I)=NT+1
      K=2
      GOTO 50
C-----GUB ROW-NO LOGICAL
 24   CONTINUE
      GOTO 100
C-----PLACE COLUMN IN FILE IA1 AND IA2
   50 NT=NT+1
      NAME(NT)=K
      CALL OUT(NT,ALPHA,COLNM)
      ALPHA(I)=0
 100  CONTINUE
C-----KEEP PHASE 1 COST ROW ZERO IN PHASE 2
      IROWTP(M)=0
C-----NO. OF LOGICAL COLS MC
      MC=NT
C
C-----CYCLE INPUT FILE COLUMS
      REWIND INPUT
      DO 200 JNT=1,INPUTN
 110  IF(JNT.NE.JRHS)   GOTO 130
      READ (INPUT)  (RHS(J),J=1,INPUTM)
C-----TAKE RHS FROM B0 AND SKIP TAPE VERSION
      DO 120 J=1,INPUTM
 120  RHS(J)=B0(J)
      RHS(M)=0.
      NT=NT+1
      NAME(NT)=0
      CALL OUT(NT,RHS,COLNM)
      GOTO 200
C-----GET NEXT COLUMN JNT
 130  CONTINUE
      READ(INPUT)(ALPHA(J),J=1,INPUTM)
C-----INSERT COLUMN CHANGES TO PROBLEM
      IF(JNT.GT.NCHGS)  GOTO 135
      ALPHA(ICOST)=CO(JNT)
 135  CONTINUE
C-----CHECK FOR COL PACKET, GET PKT NO. OR 0
      PKT=0
      PKT1=0
      DO 140 I=1,INPUTM
      IF( IROWTP(I).NE.4)  GOTO 140
      PKT1=1+PKT1
      IF( ALPHA (I).NE.1.) GOTO 140
```

```
      PKT =PKT1                                                         20024860
      GOTO 145                                                          20024870
 140  CONTINUE                                                          20024880
C-----CHECK FOR BOUND, GET BOUND NO. OR 0                               20024890
 145  IF(NBDS.EQ.0) GOTO 151                                            20024900
      DO 150 J=1,NBDS                                                   20024910
      IF ( IBDS(J).EQ.JNT) GOTO 155                                     20024920
 150  CONTINUE                                                          20024930
 151  J=0                                                               20024940
 155  CONTINUE                                                          20024950
C-----SET NAME TO BOUND+PACKET + STATE  AND MARK KEY COLUMN              20024960
      K=1                                                               20024970
C-----COUNT COLUMN AND WRITE TO FILE LESS GUB ELEMENTS                  20024980
 160  NT=1+NT                                                           20024990
      NAME(NT)=K+10*PKT+100000*J                                        20025000
      CALL OUT(NT, ALPHA,COLNM)                                         20025010
 200  CONTINUE                                                          20025020
C-----REMOVE GUB ROWS FROM  IBASIS AND RHS                              20025030
      INON=0                                                            20025040
      L=0                                                               20025050
      IKOST=ICOST                                                       20025060
      DO 220 I=1,M                                                      20025070
      IF(IROWTP(I).EQ.4) GOTO 210                                       20025080
C-----NON-GUB ROE                                                       20025090
      INON=INON+1                                                       20025100
      IBASIS(INON)=100*IBASIS(I)+IROWTP(I)                              20025110
      RHS(INON)=RHS(I)                                                  20025120
      GOTO 220                                                          20025130
C-----GUB ROW, STORE RHS IN AJ                                          20025140
 210  L=L+1                                                             20025150
      AJ(L)=RHS(I)                                                      20025160
C-----MOVE DOWN USER COST ROW                                           20025170
      IF(I.LT.ICOST) IKOST=IKOST-1                                      20025180
 220  CONTINUE                                                          20025190
C-----NOW REPLACE RHS ON END OF RHS                                     20025200
      IF(L.EQ.0) GOTO 240                                               20025210
      DO 230 I=1,L                                                      20025220
 230  RHS(INON+I)=AJ(I)                                                 20025230
C-----NOW DROP COUNT OF GUB ROWS                                        20025240
      M=M-L                                                             20025250
      ICOST=IKOST                                                       20025260
C-----REDUCED PROBLEM NOW COMPLETE                                      20025270
 240  CONTINUE                                                          20025280
      RETURN                                                            20025290
      END                                                               20025300
```

```
      SUBROUTINE STATUS(NOTE)
      DIMENSION NOTE(4)
      COMMON /LIMS/ MAXTRY,NTRY,JNCORE,NCRMAX,NSCAN
      COMMON /T/ M,L,MPL,MC,NT,ICOST,IC,IPHASE,JPHS,IPI
      COMMON /NAMES/ NAME(100)
      COMMON /CORE/ JAREJ(101),JA(101),JAK(101),AJ(1000)
      COMMON /A/ ALPHA(101) /B/ BETA(101) /C/ GAMMA(101) /D/ DELTA(101)
      COMMON /BASIS/ IBASIS(101),KEYS(101)
      COMMON /DJS/ DJ(100)
      COMMON /STATE/ JROS,IROW,JCOL,JOUT,ITRN,NREJ,NRIF,NDJS
      COMMON /PARAMS/ TMAX,ITNINV,TNVF,K1,K2,K3,K4,K5
      DATA JNTO/0/
      LOGICAL BASIC,ATBND
      IF(MOD(K3,11).NE.0) RETURN
      IF( MOD(ITRN  ,50).EQ.0) WRITE(6,1)
 1    FORMAT(1H1
     +          ,10H      PHASE
     +          ,10H       ITER
     +          ,10H        TRY
     +          ,15H  VAL OBJECTIVE
     +          ,10H       NDJS
     +          ,10H      NARTS
     +          ,15H     VALUE DJ IN
     +          ,10H     COL IN
     +          ,10H       CODE
     +          ,10H    COL OUT
     +          ,10H       CODE
     +          ,10H      NSCAN          )
C-----STORE CURRENT SOLUTION, QUIT OR CONTINUE
      CALL SECOND(X)
      IF(X.LT.TMAX.AND.ITRN.LT.K5) GOTO 999
      CALL MAROUT(B)
      CALL EXIT
 999    CONTINUE
C-----COUNT ACTIVE ARTIFICIALS FOR STATUS DATA
      NRIF=0
      DO 15 I=1,M
 15   IF(IBASIS(I)/100.GT.NT) NRIF=1+NRIF
      COST=-BETA(IC)
      NCOLS=JNCORE
      IF(NTRY.NE.0) GOTO 20
      CALL INROS(JNT)
      NCOLS=JNT-JNTO
      IF(NCOLS.LE.0) NCOLS=NCOLS+NT
 20   JNTO=JNT
      UNSCAN=10000*NSCAN+NCOLS
      MNTRY=1000*MAXTRY+NTRY
      IF(JCOL.EQ.0) GOTO 10
      IF(IROW.EQ.0) GOTO 10
      NJOUT=NAME(JOUT)
      IF(JOUT.EQ.0) NJOUT=0
      IF(JOUT.GT.NT) NJOUT=10000000*IROW
      WRITE(6,2) IPHASE,ITRN,MNTRY,COST,NDJS,NRIF,DJ(JCOL)
     +   ,JROS,NAME(JROS),JOUT,NJOUT,JNSCAN
 2    FORMAT(1H ,3I10,F15.6,2I10,F15.6,5I10)
      RETURN
C-----WHEN NO COLUMN WAS SELECTED
```

```
C-----OR UNBOUNDED                                                      20025880
 10    WRITE(6,3) IPHASE,ITRN,MNTRY,COST,NDJS,NPIF,NOTE,JNSCAN          20025890
 3     FORMAT(1H ,3I10,F15.6,2I10,15H---------------,4A10,I10)          20025900
       RETURN                                                           20025910
C                                                                       20025920
C                                                                       20025930
       ENTRY ERROR                                                      20025940
       WRITE(6,4) NOTE,NOTE,NOTE                                        20025950
 4     FORMAT(1H /(1H+,4A10))                                           20025960
       RETURN                                                           20025970
C                                                                       20025980
C                                                                       20025990
       ENTRY MESSG                                                      20026000
       ENTRY MSSG                                                       20026010
       IF(MOD(K3,7).NE.0) RETURN                                        20026020
       CALL SECOND(X)                                                   20026030
       WRITE(6,5) NOTE,X                                                20026040
 5     FORMAT((1H ,4A10,60X,F10.0,*  SECONDS* )                         20026050
       RETURN                                                           20026060
       END                                                              20026070
```

```
      SUBROUTINE XCHECK(CALLER,AT,B)
      REAL B(1)
C-----GIVES QUICK CROSS CHECKS AND LOCATION
      COMMON /RHS/ RHS(100)
      COMMON  /MOVES/ THETA,BNDJ,DMAX,PRMLER,DUALER
      COMMON /PARAMS/ TMAX,ITNINV,INVF,K1,K2,K3,K4,K5
      COMMON /A/ ALPHA(101) /B/ BETA(101) /C/ GAMMA(101)  /D/ DELTA(101)
      COMMON /BASIS/ IBASIS(101),KEYS(101)
      COMMON /CORE/ JAREJ(101),JA(101),JAK(101),AJ(1000)
      COMMON /I/ M,L,MPL,MC,NT,ICOST,IC,IPHASE,JRHS,IPT
      COMMON /LIMS/ MAXTRY,NTRY,JNCORE,NCRMAX,NSCAN
      COMMON /DJS/ DJ(100)
      COMMON /NAMES/ NAME(100)
      COMMON /TOLS/ DJTOL,ZERO,PIVTOL,CTOL,REPTOL,DERTOL
      COMMON /STATE/ JPOS,IROW,JCOL,JOUT,ITRN,NREJ,NPIF,NDJS
      COMMON /BOUNDS/ BOUNDS(100),IBDS(100),NBDS
      INTEGER DELTA
      IROWTP(I)=MOD(IBASIS(I),100)
C-----K4 IS 1000*START + STOP ITERATION FOR XCHECKS
      IF(K4/1000 .GT.ITRN .OR. MOD(K4,1000).LT.ITRN) RETURN
      K4=1000*(ITRN+K2)+MOD(K4,1000)
      WRITE(6,1) CALLER,IROW,THETA,BNDJ,JPOS
 1    FORMAT(*0.......................................*/
     +        * XCHECK CALLED BY *A6*  PIVOT ROW---*I3,
     +        *  STEP*E12.5*  BOUND*E11.4*  COLUMN*I5)
       WRITE(6,5) (DJ(J),J=1,JNCORE)
5      FORMAT(32X,10F10.4)
      JKOL=JCOL
      J1=MAX0(JKOL-5,1)
      J2=MIN0(J1+9,JNCORE)
      WRITE(6,5)  (JA(K),K=J1,J2)
 5    FORMAT(32X,10I10)
      IORG=1
      JEND=JNCORE*M
      DO 40 I=1,M
      JORG=J1*M-M+1
      DO 30 J=J1,J2
      AJ(JEND+J)=DOT(M,B(IORG),AJ(JORG) )
      IF( ABS(AJ(JEND+J)).LE.ZERO ) AJ(JEND+J)=0.
 30   JORG=JORG+M
      WRITE(6,8) I,IBASIS(I),ALPHA(I),BETA(I),(AJ(JEND+J),J=J1,J2)
 40   IORG=IORG+M
      DO 45 J=J1,J2
      JAJ=JA(J)
 45   DELTA(J)=NAME(JAJ)
      WRITE(6,5)(DELTA(J),J=J1,J2)
      IF(L.EQ.0) GOTO 60
      DO 50 I=1,L
      WRITE(6,8) I,KEYS(I),ALPHA(I+M),BETA(I+M)
 50   CONTINUE
 60   CONTINUE
 8    FORMAT(I3,I7,2E10.2,2X,10E10.2)
C-----ERROR CHECKING OPTION IN XCHECK
 70   CONTINUE
      IF(MOD(K3,17).NE.0) GOTO 555
C------GAMMA SUMS LHS-RHS
      DO 90 I=1,MPL
```

```
 90   GAMMA(I)=-RHS(I)
C-----CYCLE ALL BOOK KEEPING TO GET COLUMNS IN ORDER
      LAST=1
      NVARS=MPL+NBDS
      DO 500 NVAR=1,NVARS
      NEXT=999999999
C-----BASIC COLUMNS
      DO 200 I=1,M
      J=IBASIS(I)/100
C-----MARK STRUCTURALS
      ITAG=2
      IF(J.LE.NT) GOTO 150
C-----MARK ARTIFICIALS
      ITAG=5
      IF(J.LE.NT+100) GOTO 150
C-----MARK NEGATIVE STRUCTURALS
      ITAG=6
      J=J-(NT+100)
      IF(J.LE.NT) GOTO 150
C-----MARK NEGATIVE ARTIFICIALS
      ITAG=7
 150  CONTINUE
      IF(J.LT.LAST) GOTO 200
      IF(J.GT.NEXT) GOTO 200
      NEXT=J
      JTYPE=2
      JTAG=ITAG
      X=BETA(I)
      IBAS=I
 200  CONTINUE
C-----BOUNDED COLUMNS
      IF(NBDS.EQ.0) GOTO 300
      NEXTJ=MIN0(NT,NEXT)
      DO 250 J=LAST,NEXTJ
      IF(MOD(NAME(J),10).EQ.3) GOTO 290
 250  CONTINUE
      GOTO 300
 290  NEXT=J
      JTYPE=3
      X=BOUND(J)
C-----KEY COLUMNS
 300  CONTINUE
      IF(L.EQ.0) GOTO 360
      DO 350 I=1,L
      J=KEYS(I)/100
      IF(J.LT.LAST) GOTO 350
      IF(J.GT.NEXT) GOTO 350
      NEXT=J
      JTYPE=4
      X=BETA(M+I)
 350  CONTINUE
 360  CONTINUE
C
C-----GET NEXT COLUMN TO CORE IF REAL (JTAG=2 OR 6)
      IF(NEXT.EQ.999999999) GOTO 510
      IF(NEXT.GT.NT) GOTO 400
      CALL IN(NEXT,AJ(JEND+1),JNCORE+1)
C-----ADD GUB ELEMENTS
```

```
      MP1=M+1                                                           20027230
      IF(L.EQ.0) GOTO  385                                              20027240
      DO 380 I=MP1,MPL                                                  20027250
 380  AJ(JEND+I)=0.                                                     20027260
      IGUB=MOD(NAME(NEXT),100000)/10                                    20027270
      IF(IGUB.NE.0) AJ(JEND+M+IGUB)=1.                                  20027280
 385  IF(JTYPE.NE.2) GOTO 450                                           20027290
      IF(JTAG.NE.5) GOTO 450                                            20027300
C-----NEGATIVE STRUCTURALS                                              20027310
      DO 390 I=1,MPL                                                    20027320
 390  AJ(JEND+I)=-AJ(JEND+I)                                            20027330
      AJ(JEND+M)=1.                                                     20027340
      GOTO 450                                                          20027350
C-----ARTIFICIAL VECTOR (JTAG=5 OR 7)                                   20027360
 400  DO 410 I=1,MPL                                                    20027370
 410  AJ(JEND+I)=0.                                                     20027380
      AJ(JEND+IBAS)=1.                                                  20027390
      AJ(JEND+M)=1.                                                     20027400
      IF(JTAG.EQ.7) AJ(JEND+IBAS)=-1.                                   20027410
C                                                                       20027420
C-----SUM X*AJ TO GAMMA-- THE ERROR                                     20027430
 450  DO 460 I=1,MPL                                                    20027440
 460  GAMMA(I)=GAMMA(I)+X*AJ(JEND+I)                                    20027450
 500  LAST=NEXT+1                                                       20027460
 501  FORMAT(4I4,E12.4,10F10.4/(28X,10F10.4))                           20027470
 510  CONTINUE                                                          20027480
C                                                                       20027490
C-----CHECK ERROR AGAINST TOLERANCE                                     20027500
      PRMLER=0.                                                         20027510
      K=0                                                               20027520
      DO 550 I=1,MPL                                                    20027530
      ABSGAM=ABS(GAMMA(I))                                              20027540
      IF(ABSGAM.LE.PERTOL) GOTO 550                                     20027550
      K=K+1                                                             20027560
      DELTA(K)=I                                                        20027570
      GAMMA(K)=GAMMA(I)                                                 20027580
      IF(ABSGAM.LE.PRMLER) GOTO 550                                     20027590
      PRMLER=ABSGAM                                                     20027600
 550  CONTINUE                                                          20027610
      IF(PRMLER.LE.PERTOL) WRITE(6,552)                                 20027620
      IF(PRMLER.LE.PERTOL) GOTO 555                                     20027630
      WRITE(6,551) PRMLER,PERTOL,(DELTA(I),GAMMA(I),I=1,K)              20027640
      IF(MOD(K3,19).NE.0) GOTO 555                                      20027650
      ITNINV=ITRN                                                       20027660
 551  FORMAT(*0PRIMAL ERRORS EXCEED TOLERANCE---*/                      20027670
     +       * ERROR--*E12.4*   TOLERANCE--*E12.4/(4(I10,E20.8)))       20027680
 552  FORMAT(* ERRORS WITHIN TOLERANCE*)                                20027690
 555  WRITE(6,7)                                                        20027700
 7    FORMAT(1H ,40H---------------------------------------- //  )      20027710
      RETURN                                                            20027720
      END                                                               20027730
```

```
      PROGRAM REPGEN(INPUT,OUTPUT,TAPEA,TAPE5=INPUT,
     1 TAPE6=OUTPUT,TAPE9=TAPEA)
      COMMON /VECSTG/ VNAME(10),C,LENP,VLIFE(10),INH(10,16),
     *  VCOST(10,5),NAMEN(10),COSTS(30,3)
      COMMON /BASICS/ CHAP(5000,4),CODE(20),PER(10),IYR(10),LYR(10)
      COMMON /OUTS/ OANDM(20),SALE(20),SAVE(20),EXIST(10,20),
     *  PURCH(10,20),STOR(10,20),SALV(10,20),PROC(20),PROT(20)
      COMMON /PARAMS/ PDTOT,INYR,LAST,NV,NP,TOT,TITLE(4),COST
      DATA CODE / 2H01,2H02,2H03,2H04,2H05,2H06,2H07,2H08,2H09,2H10,
     *            2H11,2H12,2H13,2H14,2H15,2H16,2H17,2H18,2H19,2H20/
      CALL SETUP
   50 READ(9,100)(TITLE(I),I=1,4)
  100 FORMAT(4A10)
      IF(EOF,9)7777,200
  200 PDTOT=0.0
      DO 300 I=1,20
      SALE(I)=0.0
      SAVE(I)=0.0
      PROC(I)=PROT(I)
      OANDM(I)=0.0
      DO 250 N=1,10
      PURCH(N,I)=0.0
      EXIST(N,I)=0.0
      STOR(N,I)=0.0
      SALV(N,I)=0.0
  250 CONTINUE
  300 CONTINUE
      CALL INSOLN
      CALL CINFO
      CALL PINFO
      GO TO 50
 7777 STOP
      END
```

```
      SUBROUTINE CINFO                                                  30000340
      COMMON /VECSTG/ VNAME(10),C,LENP,VLIFE(10),INH(10,16),            30000350
     *  VCOST(10,5),NAMEN(10),COSTS(30,3)                               30000360
      COMMON /BASICS/ CHAR(5000,4),CODE(20),PER(10),IYR(10),LYR(10)     30000370
      COMMON /OUTS/ OANDM(20),SALE(20),SAVE(20),EXIST(10,20),           30000380
     *  PURCH(10,20),STOR(10,20),SALV(10,20),PROC(20),PROT(20)          30000390
      COMMON /PARAMS/ PDTOT,INYR,LAST,NV,NP,TOT,TITLE(4),COST           30000400
      DATA  ONE,TOTAL,PERIOD / 2H01,6HTOTAL  ,6HPERIOD /                30000410
      WRITE(6,100)(TITLE(I),I=1,4)                                      30000420
      SUMT=0.0                                                          30000430
      TPROC=0.0                                                         30000440
      TCOST=0.0                                                         30000450
      DO 500 I=1,20                                                     30000460
  500 TCOST=TCOST+OANDM(I)+SAVE(I)-SALE(I)                              30000470
      TCOST=COST-TCOST-PDTOT                                            30000480
      DO 600 I=1,NP                                                     30000490
  600 TPROC=TPROC+PROC(I)                                               30000500
      TPROC=TPROC/TCOST                                                 30000510
      DO 1000 I=1,NP                                                    30000520
      IF(PER(I).EQ.ONE)  N=I                                            30000530
 1000 CONTINUE                                                          30000540
      DO 2000 I=N,NP                                                    30000550
      K1=IYR(I)-INYR+1                                                  30000560
      K2=LYR(I)-INYR+1                                                  30000570
      DO 1500 K=K1,K2                                                   30000580
      IF(K.EQ.K1) GO TO 1500                                            30000590
      OANDM(K1)=OANDM(K1)+OANDM(K)                                      30000600
      SALE(K1)=SALE(K1)+SALE(K)                                         30000610
 1500 CONTINUE                                                          30000620
      J=I-N+1                                                           30000630
      PROC(I)=PROC(I)/TPROC                                             30000640
      OANDM(K1)=OANDM(K1)+SAVE(I)                                       30000650
      SUM=PROC(I)+OANDM(K1)-SALE(K1)                                    30000660
      WRITE(6,200) PERIOD,CODE(J),PROC(I),OANDM(K1),SALE(K1),SUM        30000670
      IF (J.EQ.1) GO TO 2000                                            30000680
      OANDM(1)=OANDM(1)+OANDM(K1)                                       30000690
      SALE(1)=SALE(1)+SALE(K1)                                          30000700
      PROC(N)=PROC(N)+PROC(I)                                           30000710
 2000 SUMT=SUMT+SUM                                                     30000720
      I=LYR(NP)-INYR+2                                                  30000730
      WRITE(6,300) TOTAL,PDTOT,PROC(N),OANDM(1),SALE(1),SUMT            30000740
      WRITE(6,400) SALE(I)                                              30000750
  100 FORMAT(1H1,15X,4A10 / 1H-,*COST INFORMATION* /                    30000760
     *1H-,12X,5(1H*,12X) / 13X,1H*,*   R AND D  *, 1H*,                 30000770
     ** PROCUREMENT*,1H*,*  OPERATING  *,1H*,*   SALVAGE  *,1H*,        30000780
     **    TOTAL    * / 1H ,77(1H*) / 13X,5(1H*,12X))                   30000790
  200 FORMAT(1H ,A6,2X,A2,2X,1H*,12X,4(1H*,1X,F9.3,2X) / 13X,5(1H*,12X))30000800
  300 FORMAT(13X,5(1H*,12X) / 1H ,A6,6X,5(1H*,1X,F9.3,2X) / 1H ,77(1H*))30000810
  400 FORMAT(1H- / 1H-,*TRUNCATION VALUE FOR RESOURCES = *,F9.3)        30000820
      RETURN                                                            30000830
      END                                                               30000840
```

```
      SUBROUTINE INSOLN
      COMMON /VECSTG/ VNAME(10),C,LENP,VLIFE(10),INH(10,16),
     *  VCOST(10,5),NAMEN(10),COSTS(30,3)
      COMMON /BASICS/ CHAR(5000,4),CODE(20),PER(10),IYR(10),LYR(10)
      COMMON /OUTS/ DANDM(20),SALE(20),SAVE(20),EXIST(10,20),
     *  PURCH(10,20),STOR(10,20),SALV(10,20),PROC(20),PROT(20)
      COMMON /PARAMS/ RDTOT,INYR,LAST,NV,NP,TOT,TITLE(4),COST
      INTEGER TOT
      TOT=NP+1
      DATA X/1HX/,W/1HW/,S/1HS/,BLANK/1H /,BLAN2/2H  /
 7777 READ(9,100)IND,VAL
      IF(IND.GE.0) GO TO 101
      COST=VAL
      GO TO 700
  101 IF(IND.EQ.0) GO TO 7777
      IF(CHAR(IND,1).EQ.X) GO TO 500
      IF(CHAR(IND,1).EQ.W) GO TO 400
      IF(CHAR(IND,1).EQ.S) GO TO 300
      IF(CHAR(IND,3).NE.BLAN2) GO TO 7777
C  INTERPRET PNN VARIABLES FOR INVESTMENT CONSTRAINTS
      DO 200 I=1,20
      IF (PER(I).EQ.CHAR(IND,2)) GO TO 210
  200 CONTINUE
      GO TO 1000
  210 PROC(I)=PROC(I)-VAL
      PROC(I+1)=PROC(I+1)+VAL
      GO TO 7777
C  INTERPRET INHERITED FLEET AND PURCHASE FLEET VARIABLES
  400 DO 405 J=1,20
      IF(CODE(J).EQ.CHAR(IND,2)) GO TO 410
  405 CONTINUE
      GO TO 1000
  410 DO 420 I=1,10
      IF(PER(I).EQ.CHAR(IND,3)) GO TO 430
  420 CONTINUE
      GO TO 1000
  430 ISTART=IYR(I)
      IF(CHAR(IND,1).EQ.X) PURCH(J,I)=VAL
      DO 450 I=1,10
      IF(PER(I).EQ.CHAR(IND,4)) GO TO 460
  450 CONTINUE
      GO TO 1000
  460 IEND=LYR(I)
      CALL VALUES(J,ISTART,IEND,VAL)
      GO TO 7777
C  INTERPRET MOTHBALL VARIABLES
  300 DO 350 I=1,20
      IF(CODE(I).EQ.CHAR(IND,2)) GO TO 360
  350 CONTINUE
      GO TO 1000
  360 DO 370 J=1,10
      IF(PER(J).EQ.CHAR(IND,3)) GO TO 380
  370 CONTINUE
      GO TO 1000
  380 STOR(I,J)=VAL
      LENP=LYR(J)-IYR(J)+1
      CALL MOTH(I)
```

```
      SAVE(J)=SAVE(J)+C*VAL                                             30001420
      GO TO 7777                                                        30001430
C  INTERPRET MASTER VARIABLES                                           30001440
  500 IF(CHAR(IND,3).NE.BLAN2) GO TO 4 0                                30001450
      DO 550 I=1,20                                                     30001460
      IF(CODE(I).EQ.CHAR(IND,2)) GO TO 560                              30001470
  550 CONTINUE                                                          30001480
      GO TO 1000                                                        30001490
  560 PURCH(I,TOT)=VAL                                                  30001500
      IF(VAL.GT.0.0)                                                    30001510
     *RDTOT=RDTOT+VCOST(T,3)                                            30001520
      GO TO 7777                                                        30001530
C  ERROR MESSAGE                                                        30001540
 1000 WRITE(6,600) (CHAR(IND,I),I=1,4)                                  30001550
      STOP                                                              30001560
  700 RETURN                                                            30001570
  100 FORMAT(I4,4X,F12.4)                                               30001580
  600 FORMAT(1H-,*ERROR IN INTERPRETATION OF *,A1,3A2)                  30001590
      END                                                               30001600
```

```
      SUBROUTINE PINFO                                                  30001610
      COMMON /VECSTG/ VNAME(10),C,LENP,VLIFE(10),INH(10,16),            30001620
     *  VCOST(10,5),NAMEN(10),COSTS(30,3)                               30001630
      COMMON /BASICS/ CHAR(5000,4),CODE(20),PER(10),IYR(10),LYR(10)     30001640
      COMMON /OUTS/ OANDM(20),SALE(20),SAVE(20),EXIST(10,20),           30001650
     *  PURCH(10,20),STOR(10,20),SALV(10,20),PROC(20),PROT(20)          30001660
      COMMON /PARAMS/ RDTOT,INYR,LAST,NV,NP,TOT,TITLE(4),COST           30001670
      INTEGER TOT                                                       30001680
      DATA TOTAL,PERIOD,BLANK / 6HTOTAL ,6HPERIOD,2H   /                30001690
      WRITE(6,1000)(TITLE(I),I=1,4)                                     30001700
      M=1                                                               30001710
    5 GO TO (10,20,30,40,50,60,70,80,90),NV                             30001720
   10 WRITE(6,1010)(VNAME(I),I=1,NV)                                    30001730
      GO TO 100                                                         30001740
   20 WRITE(6,1020)(VNAME(I),I=1,NV)                                    30001750
      GO TO 100                                                         30001760
   30 WRITE(6,1030)(VNAME(I),I=1,NV)                                    30001770
      GO TO 100                                                         30001780
   40 WRITE(6,1040)(VNAME(I),I=1,NV)                                    30001790
      GO TO 100                                                         30001800
   50 WRITE(6,1050)(VNAME(I),I=1,NV)                                    30001810
      GO TO 100                                                         30001820
   60 WRITE(6,1060)(VNAME(I),I=1,NV)                                    30001830
      GO TO 100                                                         30001840
   70 WRITE(6,1070)(VNAME(I),I=1,NV)                                    30001850
      GO TO 100                                                         30001860
   80 WRITE(6,1080)(VNAME(I),I=1,NV)                                    30001870
      GO TO 100                                                         30001880
   90 WRITE(6,1090)(VNAME(I),I=1,NV)                                    30001890
 1000 FORMAT(1H1,15X,4A10 / 1H-,*PURCHASED RESOURCES*)                  30001900
 1010 FORMAT(1H-,12X,  1H*,12X  /13X,  1H*,2X,A8,2X /1H ,25(1H*)/       30001910
     * 13X,  1H*,12X)                                                   30001920
 1020 FORMAT(1H-,12X,2(1H*,12X) /13X,2(1H*,2X,A8,2X)/1H ,38(1H*)/       30001930
     * 13X,2(1H*,12X) )                                                 30001940
 1030 FORMAT(1H-,12X,3(1H*,12X) /13X,3(1H*,2X,A8,2X)/14 ,51(1H*)/       30001950
     * 13X,3(1H*,12X) )                                                 30001960
 1040 FORMAT(1H-,12X,4(1H*,12X) /13X,4(1H*,2X,A8,2X)/1H ,64(1H*)/       30001970
     * 13X,4(1H*,12X) )                                                 30001980
 1050 FORMAT(1H-,12X,5(1H*,12X) /13X,5(1H*,2X,A8,2X)/1H ,77(1H*)/       30001990
     * 13X,5(1H*,12X) )                                                 30002000
 1060 FORMAT(1H-,12X,6(1H*,12X) /13X,6(1H*,2X,A8,2X)/1H ,90(1H*)/       30002010
     * 13X,6(1H*,12X) )                                                 30002020
 1070 FORMAT(1H-,12X,7(1H*,12X) /13X,7(1H*,2X,A8,2X)/1H ,103(1H*)/      30002030
     * 13X,7(1H*,12X) )                                                 30002040
 1080 FORMAT(1H-,12X,8(1H*,12X) /13X,8(1H*,2X,A8,2X)/1H ,116(1H*)/      30002050
     * 13X,8(1H*,12X) )                                                 30002060
 1090 FORMAT(1H-,12X,9(1H*,12X) /13X,9(1H*,2X,A8,2X)/1H ,129(1H*)/      30002070
     * 13X,9(1H*,12X) )                                                 30002080
  100 IF(M.GE.2) GO TO 305                                              30002090
      K=0                                                               30002100
      DO 200 I=1,TOT                                                    30002110
      IF(PER(I).EQ.CODE(1)) K=1                                         30002120
      IF(K.NE.1) GO TO 200                                              30002130
      TEMP1=PERIOD                                                      30002140
      TEMP2=PER(I)                                                      30002150
      IF(I.NE.TOT) GO TO 105                                            30002160
      TEMP1=TOTAL                                                       30002170
```

```
      TEMP2=BLANK
  105 GO TO (110,120,130,140,150,160,170,180,190),NV
  110 WRITE(6,1110) TEMP1,TEMP2,(PURCH(J,I),J=1,NV)
      GO TO 200
  120 WRITE(6,1120) TEMP1,TEMP2,(PURCH(J,I),J=1,NV)
      GO TO 200
  130 WRITE(6,1130) TEMP1,TEMP2,(PURCH(J,I),J=1,NV)
      GO TO 200
  140 WRITE(6,1140) TEMP1,TEMP2,(PURCH(J,I),J=1,NV)
      GO TO 200
  150 WRITE(6,1150) TEMP1,TEMP2,(PURCH(J,I),J=1,NV)
      GO TO 200
  160 WRITE(6,1160) TEMP1,TEMP2,(PURCH(J,I),J=1,NV)
      GO TO 200
  170 WRITE(6,1170) TEMP1,TEMP2,(PURCH(J,I),J=1,NV)
      GO TO 200
  180 WRITE(6,1180) TEMP1,TEMP2,(PURCH(J,I),J=1,NV)
      GO TO 200
  190 WRITE(6,1190) TEMP1,TEMP2,(PURCH(J,I),J=1,NV)
  200 CONTINUE
 1110 FORMAT(1H ,A6,2X,A2,2X,  1H*,2X,F8.3,2X  / 13X,  1H*,12X  )
 1120 FORMAT(1H ,A6,2X,A2,2X,2(1H*,2X,F8.3,2X) / 13X,2(1H*,12X) )
 1130 FORMAT(1H ,A6,2X,A2,2X,3(1H*,2X,F8.3,2X) / 13X,3(1H*,12X) )
 1140 FORMAT(1H ,A6,2X,A2,2X,4(1H*,2X,F8.3,2X) / 13X,4(1H*,12X) )
 1150 FORMAT(1H ,A6,2X,A2,2X,5(1H*,2X,F8.3,2X) / 13X,5(1H*,12X) )
 1160 FORMAT(1H ,A6,2X,A2,2X,6(1H*,2X,F8.3,2X) / 13X,6(1H*,12X) )
 1170 FORMAT(1H ,A6,2X,A2,2X,7(1H*,2X,F8.3,2X) / 13X,7(1H*,12X) )
 1180 FORMAT(1H ,A6,2X,A2,2X,8(1H*,2X,F8.3,2X) / 13X,8(1H*,12X) )
 1190 FORMAT(1H ,A6,2X,A2,2X,9(1H*,2X,F8.3,2X) / 13X,9(1H*,12X) )
C
C FIRST PART OF THIS SUBROUTINE OUTPUT INFORMATION CONCERNING
C EQUIPMENT PURCHASES DURING EACH PERIOD .....
C NEXT SECTION OUTPUTS RESOURCES STORED
C
      WRITE(6,3000) (TITLE(I),I=1,4)
      M=3
      GO TO 5
  305 IF(M.EQ.2) GO TO 205
      N=0
      DO 400 I=1,NP
      K=IYR(I)-INYR+1
      IF(K.LE.0) GO TO 400
      N=N+1
      GO TO (310,320,330,340,350,360,370,380,390),NV
  310 WRITE(6,1110)PERIOD,CODE(N),(STOR(J,I),J=1,NV)
      GO TO 400
  320 WRITE(6,1120)PERIOD,CODE(N),(STOR(J,I),J=1,NV)
      GO TO 400
  330 WRITE(6,1130)PERIOD,CODE(N),(STOR(J,I),J=1,NV)
      GO TO 400
  340 WRITE(6,1140)PERIOD,CODE(N),(STOR(J,I),J=1,NV)
      GO TO 400
  350 WRITE(6,1150)PERIOD,CODE(N),(STOR(J,I),J=1,NV)
      GO TO 400
  360 WRITE(6,1160)PERIOD,CODE(N),(STOR(J,I),J=1,NV)
      GO TO 400
  370 WRITE(6,1170)PERIOD,CODE(N),(STOR(J,I),J=1,NV)
      GO TO 400
```

```
  380 WRITE(6,1180)PERIOD,CODE(N),(STOP(J,I),J=1,NV)
      GO TO 400
  390 WRITE(6,1190)PERIOD,CODE(N),(STOP(J,I),J=1,NV)
  400 CONTINUE
 3000 FORMAT(1H1,15X,4A10 / 1H-,*STORED RESOURCES* )
C
C REMAINING PART WILL OUTPUT THE TOTAL AMOUNT USED
C DURING EACH PERIOD
C
      WRITE(6,2000)(TITLE(I),I=1,4)
      M=2
      GO TO 5
  205 N=0
      DO 300 I=1,NP
      K=IYR(I) -INYR+1
      IF(K.LE.0) GO TO 300
      DO 206 J=1,NV
  206 EXIST(J,K)=EXIST(J,K)-STOP(J,I)
      N=N+1
      GO TO (210,220,230,240,250,260,270,280,290),NV
  210 WRITE(6,1110) PERIOD,CODE(N),(EXIST(J,K),J=1,NV)
      GO TO 300
  220 WRITE(6,1120) PERIOD,CODE(N),(EXIST(J,K),J=1,NV)
      GO TO 300
  230 WRITE(6,1130) PERIOD,CODE(N),(EXIST(J,K),J=1,NV)
      GO TO 300
  240 WRITE(6,1140) PERIOD,CODE(N),(EXIST(J,K),J=1,NV)
      GO TO 300
  250 WRITE(6,1150) PERIOD,CODE(N),(EXIST(J,K),J=1,NV)
      GO TO 300
  260 WRITE(6,1160) PERIOD,CODE(N),(EXIST(J,K),J=1,NV)
      GO TO 300
  270 WRITE(6,1170) PERIOD,CODE(N),(EXIST(J,K),J=1,NV)
      GO TO 300
  280 WRITE(6,1180) PERIOD,CODE(N),(EXIST(J,K),J=1,NV)
      GO TO 300
  290 WRITE(6,1190) PERIOD,CODE(N),(EXIST(J,K),J=1,NV)
  300 CONTINUE
      RETURN
 2000 FORMAT(1H1,15X,4A10 / 1H-,*TOTAL RESOURCES USED* )
      END
```

```
      SUBROUTINE SETUP                                                  30003170
      COMMON /VECSTG/ VNAME(10),C,LENP,VLIFE(10),INH(10,16),            30003180
     *  VCOST(10,5),NAMEN(10),COSTS(30,3)                               30003190
      COMMON /BASICS/ CHAR(5000,4),CODE(20),PER(10),IYR(10),LYR(10)     30003200
      COMMON /OUTS/ DANDM(20),SALE(20),SAVE(20),EXIST(10,20),           30003210
     *  PUPCH(10,20),STOR(10,20),SALV(10,20),PROC(20),PROT(20)          30003220
      COMMON /PARAMS/ PDTOT,INYR,LAST,NV,NP,TOT,TITLE(4),COST           30003230
      DIMENSION TEMP(4)                                                 30003240
      DATA IVT,IPT,IED/8HVEHICLE  ,8HPERIOD   ,8HENDTABLE /             30003250
      NVR=0                                                             30003260
      NPT=0                                                             30003270
      READ(5,1000)FNAME,INYR,LAST,NV,NT,NP                              30003280
 1000 FORMAT(A8,2X,6I5)                                                 30003290
   10 READ(5,1000)ITABLE                                                30003300
      IF(ITABLE.EQ.IVT) GO TO 20                                        30003310
      IF(ITABLE.EQ.IPT) GO TO 60                                        30003320
      IF(ITABLE.EQ.IED) GO TO 100                                       30003330
      WRITE(6,2000)ITABLE                                               30003340
 2000 FORMAT(1H-,A8,* IS NOT RECOGNIZED BY SETUP*)                      30003350
      STOP                                                              30003360
   20 NVR=NVR+1                                                         30003370
      READ(5,4000)VNAME(NVR),VLIFE(NVR)                                 30003380
      READ(5,1070)(VCOST(NVR,I),I=1,5)                                  30003390
 1070 FORMAT(5F10.2)                                                    30003400
      GO TO 10                                                          30003410
   60 NPT=NPT+1                                                         30003420
      READ(5,1140) IYR(NPT),LYR(NPT),PER(NPT),PROT(NPT)                 30003430
 1140 FORMAT(I4,I5,1X,A2,F8.2)                                          30003440
      GO TO 10                                                          30003450
 4000 FORMAT(A8,11X,I2)                                                 30003460
100    CONTINUE                                                         30003470
       PROT(NPT+1) = 0.                                                 30003480
110    CONTINUE                                                         30003490
      READ(9,3000) I,(TEMP(J),J=1,4)                                    30003500
 3000 FORMAT(I5,4X,A1,3A2)                                              30003510
      IF(EOF,9)200,150                                                  30003520
  150 DO 160 J=1,4                                                      30003530
  160 CHAR(I,J)=TEMP(J)                                                 30003540
       GO TO 110                                                        30003550
  200 RETURN                                                            30003560
      END                                                               30003570
```


ITRN - iteration count

```
      SUBROUTINE VALUES(N,ISTART,IEND,VAL)                              30003580
      COMMON /VECSTG/ VNAME(10),C,LENP,VLIFE(10),INH(10,16),            30003590
     *  VCOST(10,5),NAMEN(10),COSTS(30,3)                               30003600
      COMMON /BASICS/ CHAR(5000,4),CODE(20),PER(10),IYR(10),LYR(10)     30003610
      COMMON /OUTS/ OANDM(20),SALE(20),SAVE(20),EXIST(10,20),           30003620
     *  PURCH(10,20),STOR(10,20),SALV(10,20),PROC(20),PROT(20)          30003630
      COMMON /PARAMS/ PDTOT,INYR,LAST,NV,NP,TOT,TITLE(4),COST           30003640
      CALL YRCOST(N)                                                    30003650
      I=ISTART-INYR                                                     30003660
      II=IEND-ISTART+1                                                  30003670
      K=1                                                               30003680
      DO 10 J=1,II                                                      30003690
      I=I+1                                                             30003700
      IF(I.LE.0) GO TO 10                                               30003710
      OANDM(I)=OANDM(I)+COSTS(J,K)*VAL                                  30003720
      EXIST(N,I)=EXIST(N,I)+VAL                                         30003730
   10 CONTINUE                                                          30003740
      I=I+1                                                             30003750
      K=K+1                                                             30003760
      IF(IEND.EQ.LAST) K=K+1                                            30003770
      SALE(I)=COSTS(J,K)*VAL+SALE(I)                                    30003780
      SALV(N,I)=VAL+SALV(N,I)                                           30003790
      RETURN                                                            30003800
      END                                                               30003810
```

```
      SUBROUTINE YRCOST(J)
C  A SUBROUTINE TO COMPUTE THE OPERATING, SALVAGE, AND TRUNCATION
C  COSTS YEAR BY YEAR.  ALSO THE YEARLY MOTHBALLING SAVING IS COMPUTED.
      COMMON /VECSTG/ VNAME(10), C,LENP, VLIFE(10), TNH(10,16),
     * VCOST(10,5), NAMEN(10), COSTS(30,3)
      INTEGER VNAME,VLIFE
C  ASSUME THE OPERATING AND MAINTANCE COST INCREASES AT R*100 PER-CENT
C  A YEAR (NOT A COMPOUND RATE INCEASE)
      R=0.0
C
C  LET X= THE 1ST YEAR O. AND M. COST.  THEN
C                          X+(1+R)*X+(+2*R)*X+...+(1+9*R)*X=VCOST(J,2)
      X= VCOST(J,2)/(10.0 + 45.0*R)
C  ASSUME NO PERIOD IS LONGER THAN 6 YEARS.
      IB=VLIFE(J) +10
      DO 10 I=1,IB
      COSTS(I,1)=(1.0 + FLOAT(I-1)*R)*X*(VCOST(J,4)**(I-1))
   10 CONTINUE
C
C  ASSUME THE SALVAGE VALUE OF A VEHICLE AFTER I YEARS OF SERVICE IS
C  (ALPHA)**I *PURCHASE COST.
      ALPHA=0.5
      Y=VCOST(J,1)
      DO 20 I=1,IB
      Y= ALPHA*Y
      COSTS(I,2)=Y
   20 CONTINUE
C
C        ASSUME TRUNCATION AFTER IYEARS OF SERVICE IS
C              (VLIFE-I)*(PURCHASE COST)/VLIFE
C
      Y=VCOST(J,1)/VLIFE(J)
      DO 30 I=1,IB
      IX=VLIFE(J)-I
      IF (IX.LT.0) IX=0
      COSTS(I,3)=IX*Y
   30 CONTINUE
      RETURN
      ENTRY MOTH
C  ASSSUME THE MOTHBALLING SAVING IS P1*100 PER CENT OF THE FIRST YEAR COST-X
      P1=0.90
C     C=0
C     DO 546 IL=1,LENP
C 546 C=C-0.1*P1*VCOST(J,2)*VCOST(J,4)**(IL-1)
C     C =-X * P1
      C=-VCOST(J,2)/(10.0 + 45.0*R) * P1
      RETURN
      END
```

APPENDIX E

ERROR MESSAGES

ERROR MESSAGES FROM MATRIX GENERATOR

". . . is not a table name."

This message indicates that the input deck is not properly constructed since the program has read a card which should have been a header card but was not. The location of the error can be narrowed down by checking the output listing to see which tables have been correctly read. This error terminates execution.

"Vehicle name . . . not defined in a vehicle."

This message is output when a task table is being read. It indicates either that the vehicle name is misspelled or located improperly on the card, or that the task table has preceded the vehicle table, if the vehicle table exists. This error also terminates execution.

"The period tables are out of order."

This message indicates that the first year of the period just read was not equal to one plus the last year of the last period read. This can be caused by improper sequencing or improper definition of the periods. This error will cause execution to terminate.

"Warning--the number of tables input was not the expected number."

This message does not terminate execution, but does indicate that there was a difference between the number of tables indicated on the title card and the number actually read by the program.

"Incorrectly read file . . . columns read as . . ."
"The M-1 column was . . ., unable to find RHS mark."
"Reached EOF while writing column . . . and row . . ."

These three error messages all refer to errors encountered when trying to convert the MPS360 file to the file for BBCAV2. If one of

these errors occurs, a major problem exists within the program. As a result these prevent the creation of the BBCAV2 file, but allow the program to execute to completion to give the analyst the most information possible about the problem.

ERROR MESSAGES FROM MAIN PROGRAM

"BLIST size exceeded"

BLIST is the array used for storing nodes of the branching tree. It is presently dimensioned to handle 25 nodes. When there exist more than 25 nodes which have been defined but have not been evaluated, this message is generated. It indicates that this particular problem is converging very slowly, and if one desires an accurate answer then the arrays EKBL, PSIGL, NXBL, XNXBL, and BLIST should be enlarged. This error causes the system to print out the best solution found and proceed to the next problem.

"Time is up . . . cycling to next problem."
"Have solved max. no. of LP probs."

These two messages inform one that the solution which is output is not necessarily optimal but was caused by one of the input parameters. The first message indicates a violation of the time indicated by the second field of the real parameter card. The second message is a result of reaching the limit on the number of nodes (LP problems) which is set in the last field of the integer parameter card.

"Premature EOF on a matrix tape at column . . ."

This message indicates that the size of the tape file does not correspond with the size indicated on the integer parameter card. It also gives an indication of the size of the tape file for comparison against that which was input. This error terminates execution of the program.

"IO--column not located in NT reads"
"Row--key not in core"
"Insert cannot find rejected column"
"PIVOT--PIVOT less than PIVTOL"
"KEYCH--essential packet no basic column"

These five error messages are used exclusively for debugging, and should not occur in normal operation. The general cause for this is that some section of core has been overwritten accidently.

"PIVOT dropped column . . ."

This message indicates that a column was removed from the basis during the inversion process. This occurs when the input basis is not feasible, and when numerical errors have caused the current basis to "drift" out of the feasible region.

ERROR MESSAGES FROM REPORT GENERATOR

". . . is not recognized by SETUP."

The routine SETUP has encountered an error in the input deck while attempting to read a table name. This error terminates execution.

"Error in interpretation of . . ."

The program has been unable to determine the meaning of the seven-character code indicated in the message. If the code is a valid one (one of the forms shown in Fig. 11), then there is probably an error in the period descriptions of the input deck. There is also possibility of other errors in the input deck or, as a last resort, of errors in the reference list file. If the code is not a valid one, then the error must be in the reference list. This error also terminates execution.

GLOSSARY

This section contains the mnemonic definitions for all three programs—GENLCP, BBCAV2, and REPGEN. It is arranged into two major sections. The first section lists the mnemonics in labeled common—then the local variables contained within each subroutine, for each of the three programs, respectively. The second section is an overall alphabetical listing for handy reference. Note that in this listing, the same mnemonic may have two or more meanings. Each entry is identified here as a local or global variable, and is cross-referenced to the first section. Use of the two sections, in conjunction, should eliminate any ambiguity.

SECTION 1.....G-2

SECTION 2.....G-25

Section I

GENLCP CODING DEFINITIONS

COMMON/VECSTG/

VNAME (10)	- vehicle names
C	- temporary storage for cost data
LENP	- length of period
VLIFE (10)	- maximum life of resource (vehicle)
INH (10, 16)	- number of each type resource inherited from each year
VCOST (10,5)	- cost data for each resource
NAMEN (10)	- pointers for numbering resources
COST (30, 3)	- yearly operating, salvage and truncation costs

COMMON/ALTSTG/

ALTER (288,9)	- array used for eliminating infeasible alternatives from tasks
YAVL (10)	- year resource first available

COMMON/TSKSTG/

U (7, 288, 9)	- array of task alternatives
NTSK (9)	- number of alternatives in task

COMMON/PRDSTG/

NPERYR (10, 3)	- first and last year of period and number of tasks in period
NPTASK (10, 9)	- ID number of each task in period
PTASK (10, 9)	- multiplicative factor for all values in associated task for each period

LOCAL VARIABLES

GENLCP

ALPHA	- temporary storage for attrition
AU (16)	- temporary storage for alternatives

BUDG (10)	- limit on procurement expenditures in each period
CMAX	- temporary cost storage for ordered resources
FNAME	- file name
IHVN (10)	- pointers for inherited vehicles
INHYRS	- number of years from which vehicles are inherited
ITABLE	- temporary storage for table name
LIFER	- temporary storage for remaining useful life of a vehicle
LY	- last year of problem
MAXL	- temporary storage for vehicle life
MCOL	- number of columns in matrix
NAMES (10)	- temporary pointers
NINHP	- number of inherited periods
NIV	- number of inherited vehicle types
NL (10)	- temporary storage used in formatting output
NN (10)	- temporary storage used in formatting output
NPP	- number of periods
NPT	- number of period tables read
NRD	- number of vehicles having R&D
NROW	- number of rows in matrix
NT	- number of tasks
NTR	- number of task tables read
NV	- number of vehicle types
NVEHU (10)	- indicates if vehicle used in period
NVR	- number of vehicle tables read
NYR	- temporary storage for last year of period
ONE	- "1.0"
ONEM	- "-1.0"

SY	- start year of problem
UB (10)	- calculated upper bounds on resources
UMAX	- temporary storage for greatest quantity of a specific vehicle which might be used in a task
YEARS (21)	- stores inherited years
YRINT (20)	- scale factor for all tasks in period

YRCOST

ALPHA	- rate of decrease in salvage value
R	- rate of increase in operating cost
R1	- portion of operating cost refunded for mothballing resource

YINTERP

JSUB (10)	- pointers for vehicle subscripts
VMIN	- temporary storage for minimum quantity of vehicles which can be used for a task

MATFILL

C	- "COLUMNS"
CNAME	- column name for which RVAL is being derived
CTEMP	- temporary storage for column name
IROWTP (100)	- indicates row type; all set to zero except generalized upper bound rows which are set to 4
ITEMP	- temporary storage for first letter of RNAME
R	- "RHS"
RNAME (120)	- row names
RTEMP	- temporary storage for row names
RVAL (100)	- vector of values in each row for a specific column
VAL	- temporary storage for value of specific row and column

BBCAV2 CODING DEFINITIONS

COMMON/CV1/

IP (12)	- storage for input parameters on integer parameter card
RP (12)	- storage for real parameters, first four locations are for input from real parameter card, rest are temporary storage
TMP (10)	- temporary storage

COMMON/CV2/

T (100, 10)	- storage for columns of matrix associated with nonlinear variables
BO (100)	- right-hand-side vector
BLO (10)	- set of lower bounds on nonlinear variables
ULO (10)	- set of upper bounds on nonlinear variables
CO (10)	- vector for linear approximation for nonlinear cost functions

COMMON/CV3/

M	- number of rows in matrix
N	- number of columns in matrix
NCF	- number of nonlinear variables
PHIT	- cost of a nonlinear solution
UZ	- cost of best nonlinear solution
USP	- $UZ\ (1 + \epsilon)^{-1}$
USM	- $UZ\ (1 - \epsilon)^{-1}$
EKO	- cost associated with the lower bounds of the node
MPLUS	- number of rows in the matrix including the cost row (M + 1)

COMMON/CV4/

IX (110)	- columns in basic solution
X (110)	- values associated with columns in IX

IXZ (110)	- columns in best solution
XZ (110)	- values associated with columns in IXZ
XCON (10)	- stores values found in X which are associated with the nonlinear variables
COST	- cost of the solution returned from the LP

COMMON/CV5/

SIGMA (100, 4)	- stores information which defines the current node
TSIG	- temporary storage associated with EKO
LSTMAX	- maximum length which the branching list has achieved

COMMON/CV7/

NPHASE	- stores LP phase code
NF1	- signifies feasible solution when set equal to 1
CFX	- no longer used
IOPT	- used to flag unbounded solution
NOP	- node number
NOPS	- nodes solved
NEWXZ	- flags when new best solution found and should be output

COMMON/CV8/

NXBK	- index of branching variable
XK	- value of branching variable
NOBOL	- number of nodes on list
EKBL (25)	- EKO value associated with each node on the list

COMMON/CV9/

PSIGL (25)	- lower bound associated with each node on list
NXBL (25)	- index of branching variable for each node
XNXBL (25)	- value of branching variable for each node
BLIST (25, 131)	- branching list; contains right-hand-side vector, plus upper bounds, lower bounds, and linear cost approximations for nonlinear variables

COMMON/TMX/

TMO	- time SET was called
EXT	- time when time limit on problem will expire

COMMON/CORE/

AJ (5000)	- columns in core plus basis inverse
JA (101)	- in-core column disc indices
JAK (101)	- dummy storage area
JAREJ (101)	- set to 1 when corresponding in-core column rejected

COMMON/PARAMS/

TMAX	- maximum time before MAPOUT
ITNINV	- iteration of next invert
INVF	- invert frequency
K1	- not used
K2	- not used
K3	- output control parameter
K4	- XCHECK control parameter
K5	- maximum LP iterations before MAPOUT

COMMON/INPUT/

INPUT	- file containing input matrix
INPUTM	- number of rows in matrix
INPUTN	- number of columns in matrix

COMMON/FILES/

IA1	- disc file for matrix less GUB rows
IA2	- disc file for packed matrix less GUB rows
IMAP	- file for starting and terminating basis

COMMON/STATE/

IROW	- current selected row

ITRN	- iteration count
JCOL	- current selected column
JOUT	- rejected column index
JPOS	- selected column index
NDJS	- number of negative DJ's
NPIF	- number of primal infeasibilities
NREJ	- number of rejected in-core columns

COMMON/LIMS/

JNCORE	- number of columns in core
MAXTRY	- maximum number of in-core iterations
NCRMAX	- maximum number of columns which fit in core
NSCAN	- number of disc reads
NTRY	- number of in-core iterations

COMMON/IXX/

IX (100)	- indices of solution columns

COMMON/XX/

X (100)	- values of solution columns

COMMON/TOLS/

CTOL	- cost tolerance for infeasibility
DERTOL	- dual error tolerance; not used
DJTOL	- DJ tolerance
PERTOL	- primal error tolerance
PIVTOL	- pivot tolerance
ZERO	- smallest recognized number

COMMON/BASIS/

IBASIS (101)	- basic columns for non-GUB rows
KEYS (101)	- storage of GUB key columns

COMMON/DJS/

DJ (100)	- values of current in-core DJ's

COMMON/MOVES/

BNDJ	- value of current column bound
DMAX	- largest DJ value stored
DUALER	- dual error; unused
PRMLER	- primal error; unused
THETA	- step chosen by ROW, adjusted in PRIMAL

COMMON/I/

IC	- current cost row
ICOST	- user's cost row
IPHASE	- current LP phase
IPI	- current location of PI vector in basis
JRHS	- user's input RHS
L	- number of GUB rows
M	- number of active interval rows
MC	- last logical column
MPL	- M plus L
NT	- total number of columns (MC + INPUTN)

COMMON/A/

ALPHA (101)	- work space, usually current column inverse

COMMON/B/

BETA (101)	- work space usually values of basic and key variables

COMMON/C/

GAMMA (101)	- not used

COMMON/D/

DELTA (101)	- not used

COMMON/ROWTYP/

IROWTYP (101)	- user's input row types

COMMON/NAMES/

NAME (600)	- state of each variable or column

COMMON/BOUNDS/

BOUNDS (100)	- values of upper bounds
IBDS (100)	- column indices of bound columns
NBDS	- number of bounds

COMMON/RHS/

RHS (100)	- stores user's current right-hand-side

LOCAL VARIABLES

BBCAV2 and BOX1

BLT (10)	- temporary storage for BLO
BBK	- lower bound on branching variable
BBK2	- value of branching variable
COST1	- solution cost for lower branch
COST2	- solution cost for upper branch
CT (10)	- temporary storage for CO
EPSI	- epsilon value from real parameter card
ESIG	- temporary storage for EKO
ICOL	- temporary storage for column index
INDIC	- indicates which branch (upper or lower) is being solved
LSTFRE (25)	- gives locations of storage areas on the branching list which are vacant
MNC	- the negative of NCF
MNX	- the negative of N
NCF1	- NCF

NCF4	- NORA + 3 * NCF
NFREE	- number of gaps (empty location between two filled locations) in the BLIST
NMIN	- index of the lowest bound on the BLIST, or N-1, depending on where it is used
NOL	- index for storage on BLIST
NORA	- M
NXB	- temporary storage for next branching variable
PH1 and PH2	- temporary storage of values from GETPHI
PMIN	- value of lowest bound on BLIST
TSTO (130)	- temporary storage
TITLE (4)	- alphanumeric title of problem
UBK	- upper bound on branching variable
UBK2	- difference between upper bound and value for branching variable
ULT (10)	- temporary storage for ULO
US	- temporary storage for USP

INITA

AJ (100)	- temporary storage for column of matrix
DUM1 and DUM2	- temporary storage for reading unused sections of tape

READIN

NC	- number of basis cards to be read from input

TIMEC

SECS	- actual CPU clock time
XX	- elapsed time on problem

GETASQ

TEMP	- location used while swapping contents of two locations in an array
NEM1	- number of elements in an array minus one

GETC

DIF	- difference between upper and lower bound for a variable
FX1 (10)	- cost function values for lower bounds
FX2 (10)	- cost function values for upper bounds
ICX	- number of variables for which cost slopes are to be derived

NXBRN

BLT (10)	- temporary storage for BLO
CT (10)	- temporary storage for CO
YT (10)	- differences between solution point and lower bounds
FX1 (10)	- cost function values for lower bounds
FX2 (10)	- cost function values for solution point
DIF (10)	- differences between cost functions and linear approximations
NDX (10)	- indices of nonlinear variables
NFX	- the negative of NCF
XT (10)	- solution values for nonlinear variables

PRESET AND PARAMS

IBMAX	- maximum number of nodes which may be stored on BLIST
JBMAX	- maximum number of words of information which may be stored for each node in BLIST
NORA	- number of rows in the matrix including the objective function

LP

B (100)	- basis inverse stored by rows
IORG	- origin of basis inverse
MROWS	- user's number of rows
NCHGS	- user's number of bound columns

NCOLS	- user's number of columns
NWAJ	- storage dimension of the array AJ

SETUP

ID	- local row type being processed
IKOST	- temporary storage of user's cost row
INON	- temporary number of non-GUB rows found
PKT1	- temporary count of GUB row packet columns
PKT	- actual GUB row column being processed

IO

ALPHA	- column to be written or read
B	- address of origin of basis inverse
JCOL	- core position of column being read
JNT	- index of columns read
KEY	- index of key column to be located
KOL1	- last column read on file IA1
KOL2	- last column read on file IA2
KOL	- column to be located on either file or packet number of desired key
NAAM	- not used
NAME	- column name, or position in core to which column is read
PACK (100)	- temporary storage of packed column
ZS	- parameter used to pack coefficients
Z	- parameter used to pack index of coefficient

MAPIN

ATBND	- "ATBND"
BASIC	- "BASIC"
BNDJ	- value of bound
B	- origin of basis inverse

CARD (8)	- image of map card
ENDER	- "END"
ID	- column number from map card
INVERSE	- "INVERS"
KEE	- "KEY"
MM	- number of elements in basis inverse
NAMES (5)	- column indices from map card
NULL	- "NULL"
PKT	- storage of column packet
ROWS	- "ROWS"
TYPE1	- first word on map card
TYPE2	- second work on map card

MAPOUT

IBAS	- count of basis variables
IBND	- count of bound variables
IKEY	- count of key variables
INLL	- count of null variables
JCOL	- user's column index of column processed
JNCORE	- number of columns in core
MAPBAS (100)	- basic column indices
MAPBND (100)	- bound column indices
MAPKEY (1000)	- key column indices
MAPNLL (10)	- null column indices
MM	- number of elements in basis inverse
MP1	- M plus 1

INVERT

ATBND	- column type
BASIC	- column type

BNDJ	- cound on current column
B	- origin of basis inverse
IORG	- origin of first element in B
ITYPE	- row type
JNT	- current column index
JORG	- origin in AJ to which column is read
JTYPE	- variable type
KORG	- origin in AJ to which key column is read
PKTO	- GUB packet number of column in AJ (KORG)
PKT	- GUB packet number of column being processed

FEASCH

BNDJ	- bound on current column
B	- basis inverse
IORG	- origin of any row in B
JPKT	- GUB packet of current column
KEY	- switch to return key processing to key loop
NB	- number of basic variables in a packet
SUMIE	- sum of infeasibilities
SUM	- value of variable before feasibility adjustment

PRIMAL

BASIC	- column type
B	- basis inverse
EPSI	- value of new basic variable
ITYPE	- type of step to be used
JOUTPK	- GUB packet of column rejected
JPOSPK	- GUB packet of column entering
NBVPKT	- number of basis variable in selected GUB row

NPEGLM	- maximum rejection due to degeneracy
NDEG	- number of degeneracy rejections
NEWROW	- row for column changing from key to basic

STATUS

ATBND	- state of a column
BASIC	- state of a column
B	- basis inverse
COST	- value of current objective function
JNSCAN	- columns in core + 1000 times number of rewinds of file IA1
JNTO	- index of last column read from disc
JNT	- last column read from disc (if MNTRY = 0)
MNTRY	- number of in-core iterations
NCOLS	- number of columns read from disc file IA1
NJOUT	- name code of column to be rejected
NOTE (4)	- 40 character comment
X	- elapsed CPU seconds

ROW

BASIC	- state of a column
B	- basis inverse
IB	- basic column index
IORG	- origin of basis inverse
IROW	- row calling parameter, row of zero
ITYPE	- type of step; 1-unbounded, 2-column to zero, 3-column to bound
JCOL	- core index of selected column
JORG	- core origin of selected column
JOUT	- column to be rejected
JPKT	- GUB packet of column selected

JPOS	- disc index of column selected
KORG	- origin of KEY column for packet JPKT
STEP	- step to current row
THETA	- best feasible step

COLUMN

ATBND	- logical column state
BASIC	- logical column state
B	- basis inverse
JCOL	- core position of selected column
JKEY	- core position of key for JCOL (if in GUB row)
JORG	- origin of a row in B
JPKTO	- current stored GUB key packet
JPKT	- GUB packet of new column
JTYPE	- type of column selected
KORG	- origin of KEY in AJ
NCORE	- number of columns in core
NDJST	- number of negative DJ's from disk read
NULL	- column state
PIKEY	- PJ value for current KEY JPKT

CHECK

ATBND	- state of column
BASIC	- state of column
B	- basis inverse
DJ	- current column sensitivity
JCOUNT	- count of columns processed
JFBCH	- number of columns, checked in current batch
JNT	- index of current column

JORG	- origin in AJ to which columns are read
JTYPE	- type of column being processed
KORG	- origin of key column in AJ
NBCH	- number of columns in batch
NFBCH	- number of columns retained from batch
PIKEY	- DJ for current key at KORG
PKTO	- packet of current key
PKT	- packet of new column, JNT

INSERT

B	- basis inverse
DJ	- DJ for column to be stored
DMAX	- largest DJ of stored columns
D (15)	- DJ's of stored columns
ID (15)	- indices of stored columns
JORG	- origin of vacancy for column in AJ
JPOSR	- disc index of column to be rejected
JPOS	- disc index of column to be stored
JREJ	- origin of rejected column in AJ
NPBCH	- number of columns to be saved from batch
N	- number of columns currently saved

KEYCH

B	- basis inverse
IB	- disc index of basic column for current row
IORG	- origin of a row in B
IROW	- row to which key column is shifted when made basic
JCOLPK	- GUB packet of column being moved from KEY
JCOL	- column to be moved

JKEY	- candidate key column
JORG	- origin of a row in B
MPK	- row of column which was KEY
SUM	- temporary storage

PIVOT

ALPHA	- column to be pivoted into basis
B	- basis inverse
DIVOT	- candidate pivot while searching for best
IORG	- origin of pivot row in B
IROW	- pivot row
JORG	- origin of a row in B
JP	- basic column for a row
PIV	- pivot used

SETBND

I	- input disk column index
J	- absolute value of I
K	- new state

DOT

DOT	- double precision inner product of X and Y
DOTS	- single precision inner product of X and Y
M	- vector dimension
SUM	- double precision accumulator
X	- input vector
Y	- input vector

BOUND

BOUND	- value of column bound (or 10**70)
IB	- bound index in IBDS
J	- input disc column index

KEYFIND

I	- dummy variable
JAJ	- potential column's in-core position
JPKT	- GUB packet number for column
JTYPE	- column type
KEYFIND	- position of key found
KEY	- column number of key to be located
PKT	- GUB packet of desired key

ESCAPE

AALPHA	- "ALPHA"
ABASIS	- "BASIS"
ABETA	- "BETA"
ADELTA	- "DELTA"
ADJ	- "DJ"
AGAMMA	- "GAMMA"
AJAREJ	- "JAREJ"
AJA	- "JA"
AKEY	- "KEY"
ANAME	- "NAME "
B	- basis inverse

XCHECK

ATBND	- logical column state
AT	- dummy
BASIC	- logical column state
B	- basis inverse
CALLER	- calling name
IORG	- origin of a row in basis inverse

JAJ	- disk index of an in-core column
JEND	- origin of vacant work space in AJ
JORG	- origin of a column in AJ
J1	- first column in column printout
J2	- last column in column printout

REPGEN CODING DEFINITIONS

COMMON/VECSTG/

VNAME (10)	- stores resource names
C	- temporary storage location used in calculating savings from resource storage
LENP	- length of period under consideration
VLIFE (10)	- expected resource life
INH (10, 16)	- not used
VCOST (10, 5)	- the five costs associated with each resource are stored in this array; in order, they are salvage and truncation, operating, R&D, retention rate, and procurement. (Explained in detail in matrix generator description.)
NAMEN (10)	- not used
COSTS (30, 3)	- cost of operating (1), selling (2), or truncating (3), a resource in the 1st thru 30th year of its life

COMMON/BASICS/

CHAR (5000, 4)	- storage of column names which have been broken down into their four meaningful parts
CODE (20)	- storage of the numbers 1 - 20 in two digit alphanumeric form
PER (10)	- pointers for two digit, alphanumeric code for periods
IYR (10)	- initial year of each period
LYR (10)	- last year of each period

COMMON/OUTS/

OANDM (20)	- operating cost for each year
SALE (20)	- salvage or truncation value for each year
SAVE (20)	- savings from resource storage for each year
EXIST (10, 20)	- number of each type resource available in each year

PURCH (10, 20)	- number of each type resource purchased in each year
STOR (10, 20)	- number of each type resource stored in each year
SALV (10, 20)	- number of each type resource disposed of at end of each year
PROC (20)	- procurement funds spent during each period
PROT (20)	- procurement funds available during each period

COMMON/PARAMS/

RDTOT	- total R&D expenditures
INYR	- initial year of problem
LAST	- last year of problem
NV	- number of resource types
NP	- number of subperiods
TOT	- number of subperiods plus 1
TITLE (4)	- name of specific solution
COST	- total cost of solution

LOCAL VARIABLES

SETUP

FNAME	- problem title (not used)
IED	- "ENDTABLE"
IPT	- "PERIOD"
ITABLE	- table name
IVT	- "VEHICLE"
NPT	- period tables read in
NT	- number of tasks (not used)
NVR	- number of resources read in
TEMP (4)	- temporary storage for column names

INSOLN

BLANK	- " "

IEND	- last year of resource existance
IND	- column number temporary storage
ISTART	- first year of resource existance
S	- "S"
VAL	- column value temporary storage
W	- "W"
X	- "X"

CINFD

PERIOD	- "PERIOD"
ONE	- "01"
SUM	- total cost for a period
SUMT	- total cost for all periods
TCOST	- temporary storage for total procurement
TOTAL	- "TOTAL"
TPROC	- correction factor for procurement

PINFO

TEMP1	- temporary storage locations for alphanumeric output
TEMP2	- temporary storage locations for alphanumeric output
BLANK	- " "
PERIOD	- "PERIOD"
TOTAL	- "TOTAL"

```
AALPHA - 'ALPHA'
                ( LOCAL - MAIN PROGRAM'S ESCAPE )
ABASIS - 'BASIS'
                ( LOCAL - MAIN PROGRAM'S ESCAPE )
ABETA - 'BETA'
                ( LOCAL - MAIN PROGRAM'S ESCAPE )
ADELTA - 'DELTA'
                ( LOCAL - MAIN PROGRAM'S ESCAPE )
ADJ - 'DJ'
                ( LOCAL - MAIN PROGRAM'S ESCAPE )
AGAMMA - 'GAMMA'
                ( LOCAL - MAIN PROGRAM'S ESCAPE )
AJAREJ - 'JAREJ'
                ( LOCAL - MAIN PROGRAM'S ESCAPE )
AJA - 'JA'
                ( LOCAL - MAIN PROGRAM'S ESCAPE )
AJ(5000) - COLUMNS IN CORE PLUS BASIS INVERSE
                (GLOBAL - MAIN PROGRAM'S COMMON / CORE / )
AJ(100) - TEMPORARY STORAGE FOR COLUMN OF MATRIX
                ( LOCAL - MAIN PROGRAM'S INITA )
AKEY - 'KEY'
                ( LOCAL - MAIN PROGRAM'S ESCAPE )
ALPHA(101) - WORK SPACE, USUALLY CURRENT COLUMN INVERSE
                (GLOBAL - MAIN PROGRAM'S COMMON / A / )
ALPHA - COLUMN TO BE WRITTEN OR READ
                ( LOCAL - MAIN PROGRAM'S IO )
ALPHA - TEMP STORAGE FOR ATTRITION
                ( LOCAL - MATRIX GENERATOR'S GENLCP )
ALPHA - RATE OF DECREASE IN SALVAGE VALUE
                ( LOCAL - MATRIX GENERATOR'S YRCOST )
ALPHA - COLUMN TO BE PIVOTED INTO BASIS
                ( LOCAL - MAIN PROGRAM'S PIVOT )
ALTER (288, 9) - ARRAY USED FOR ELIMINATING INFEASIBLE ALTERNATIVES FROM TASK
                (GLOBAL - MATRIX GENERATOR'S COMMON / ALTSTG / )
ANAME - 'NAME'
                ( LOCAL - MAIN PROGRAM'S ESCAPE )
AT - DUMMY
                ( LOCAL - MAIN PROGRAM'S XCHECK )
ATBND - 'ATBND'
                ( LOCAL - MAIN PROGRAM'S MAPIN )
ATBND - COLUMN TYPE
                ( LOCAL - MAIN PROGRAM'S INVERT )
ATBND - LOGICAL COLUMN STATE
                ( LOCAL - MAIN PROGRAM'S XCHECK )
                ( LOCAL - MAIN PROGRAM'S CHECK )
                ( LOCAL - MAIN PROGRAM'S COLUMN )
                ( LOCAL - MAIN PROGRAM'S STATUS )
AU (16) - TEMP. STORAGE FOR ALTERNATIVES
                ( LOCAL - MATRIX GENERATOR'S GENLCP )
```

```
B - BASIS INVERSE
                ( LOCAL - MAIN PROGRAM'S LP )
                ( LOCAL - MAIN PROGRAM'S XCHECK )
                ( LOCAL - MAIN PROGRAM'S ESCAPE )
                ( LOCAL - MAIN PROGRAM'S PIVOT )
                ( LOCAL - MAIN PROGRAM'S KEYCH )
                ( LOCAL - MAIN PROGRAM'S INSERT )
                ( LOCAL - MAIN PROGRAM'S CHECK )
                ( LOCAL - MAIN PROGRAM'S COLUMN )
                ( LOCAL - MAIN PROGRAM'S ROW )
                ( LOCAL - MAIN PROGRAM'S STATUS )
                ( LOCAL - MAIN PROGRAM'S PRIMAL )
                ( LOCAL - MAIN PROGRAM'S FEASCH )
                ( LOCAL - MAIN PROGRAM'S INVERT )
                ( LOCAL - MAIN PROGRAM'S MAPIN )
                ( LOCAL - MAIN PROGRAM'S IO )
BASIC - 'BASIC'
                ( LOCAL - MAIN PROGRAM'S MAPIN )
BASIC - COLUMN TYPE
                ( LOCAL - MAIN PROGRAM'S INVERT )
                ( LOCAL - MAIN PROGRAM'S PRIMAL )
BASIC - LOGICAL COLUMN STATE
                ( LOCAL - MAIN PROGRAM'S XCHECK )
                ( LOCAL - MAIN PROGRAM'S CHECK )
                ( LOCAL - MAIN PROGRAM'S COLUMN )
                ( LOCAL - MAIN PROGRAM'S STATUS )
                ( LOCAL - MAIN PROGRAM'S ROW )
BBK - LOWER BOUND ON BRANCHING VARIABLE
                ( LOCAL - MAIN PROGRAM'S BRCAV2 )
BBK2 - VALUE OF BRANCHING VARIABLE
                ( LOCAL - MAIN PROGRAM'S BRCAV2 )
BETA(101) - WORK SPACE, USUALLY VALUES OF BASIC AND KEY VARIABLES
                (GLOBAL - MAIN PROGRAM'S COMMON / B / )
BLANK - '      '
                ( LOCAL - REPORT GENERATOR'S INSOLN )
                ( LOCAL - REPORT GENERATOR'S RINFO )
BLIST(25,131) - BRANCHING LIST, CONTAINS RIGHT-HAND-SIDE VECTOR, PLUS UPPER
BOUNDS, LOWER BOUNDS AND LINEAR COST APPROXIMATIONS FOR NON-LINEAR VARIABLE
                (GLOBAL - MAIN PROGRAM'S COMMON / CV2 / )
BLO(10) - SET OF LOWER BOUNDS ON NON-LINEAR VARIABLES
                (GLOBAL - MAIN PROGRAM'S COMMON / CV2 / )
BLT(10) - TEMPORARY STORAGE FOR BLO
                ( LOCAL - MAIN PROGRAM'S BRCAV2 )
                ( LOCAL - MAIN PROGRAM'S NXBRN )
BNDJ - BOUND ON CURRENT COLUMN
                (GLOBAL - MAIN PROGRAM'S COMMON / MOVES / )
BOUNDS(100) - VALUES OF UPPER BOUNDS
                (GLOBAL - MAIN PROGRAM'S COMMON / BOUNDS / )
BOUND - VALUE OF COLUMN BOUND (OR 10 ** 70)
                ( LOCAL - MAIN PROGRAM'S BOUND )
BO(100) - RIGHT-HAND-SIDE VECTOR
                (GLOBAL - MAIN PROGRAM'S COMMON / CV2 / )
BUDG (10) - LIMIT ON PROCUREMENT EXPENDITURES IN EACH PERIOD
                ( LOCAL - MATRIX GENERATOR'S GENLCP )
```

```
C - TEMP. STORAGE FOR COST DATA
                (GLOBAL - MATRIX GENERATOR'S COMMON / VECSTG / )
C - TEMPORARY STORAGE LOCATION USED IN CALCULATING SAVINGS FROM RESOURCE
STORAGE
                (GLOBAL - REPORT GENERATOR'S COMMON / VECSTG / )
C - 'COLUMNS'
                ( LOCAL - MATRIX GENERATOR'S MATFILL)
CALLER - CALLING NAME
                ( LOCAL - MAIN PROGRAM'S XCHECK )
CARD(8) - IMAGE OF MAP CARD
                ( LOCAL - MAIN PROGRAM'S MAPIN )
CFX - NO LONGER USED
                (GLOBAL - MAIN PROGRAM'S COMMON / CV7 / )
CHAR(5000,4) - STORAGE OF COLUMN NAMES WHICH HAVE BEEN BROKEN DOWN INTO
THEIR FOUR MEANINGFUL PARTS
                (GLOBAL - REPORT GENERATOR'S COMMON / BASICS / )
CMAX - TEMP. COST STORAGE FOR ORDERING RESOURCES
                ( LOCAL - MATRIX GENERATOR'S GENLCP )
CNAME - COLUMN NAME FOR WHICH RVAL IS BEING DERIVED
                ( LOCAL - MATRIX GENERATOR'S MATFILL)
CODE(20) - STORAGE OF THE NUMBERS 1 - 20 IN TWO DIGIT ALPHANUMERIC FORM
                (GLOBAL - REPORT GENERATOR'S COMMON / BASICS / )
COST - VALUE OF CURRENT OBJECTIVE FUNCTION
                ( LOCAL - MAIN PROGRAM'S STATUS )
COST - TOTAL COST OF SOLUTION
                (GLOBAL - REPORT GENERATOR'S COMMON / PARAMS / )
COST - COST OF THE SOLUTION RETURNED FROM THE LP
                (GLOBAL - MAIN PROGRAM'S COMMON / CV4 / )
COST1 - SOLUTION COST FOR LOWER BRANCH
                ( LOCAL - MAIN PROGRAM'S BRCAV2 )
COST2 - SOLUTION COST FOR UPPER BRANCH
                ( LOCAL - MAIN PROGRAM'S BRCAV2 )
COSTS (30,3) - COST OF OPERATING (1), SELLING (2) OR TRUNCATING (3) A
RESOURCE IN THE 1ST THRU 30TH YEAR OF ITS LIFE
                (GLOBAL - MATRIX GENERATOR'S COMMON / VECSTG / )
                (GLOBAL - REPORT GENERATOR'S COMMON / VECSTG / )
CO(10) - VECTOR FOR LINEAR APPROXIMATION FOR NON-LINEAR COST FUNCTIONS
                (GLOBAL - MAIN PROGRAM'S COMMON / CV2 / )
CTEMP - TEMP. STORAGE FOR COLUMN NAME
                ( LOCAL - MATRIX GENERATOR'S MATFILL)
CTOL - COST TOLERANCE FOR INFEASIBILITY
                (GLOBAL - MAIN PROGRAM'S COMMON / TOLS / )
CT(10) - TEMPORARY STORAGE FOR CO
                ( LOCAL - MAIN PROGRAM'S BRCAV2 )
                ( LOCAL - MAIN PROGRAM'S NXBRN )
DELTA(101) - NOT USED
                (GLOBAL - MAIN PROGRAM'S COMMON / D / )
DERTOL - DUAL ERROR TOLERANCE. NOT USED
                (GLOBAL - MAIN PROGRAM'S COMMON / TOLS / )
DIF - DIFFERENCE BETWEEN UPPER AND LOWER BOUND FOR A VARIABLE
                ( LOCAL - MAIN PROGRAM'S GETC )
DIF(10) - DIFFERENCES BETWEEN COST FUNCTIONS AND LINEAR APPROXIMATIONS
                ( LOCAL - MAIN PROGRAM'S NXBRN )
```

```
DIVOT - CANDIDATE PIVOT WHILE SEARCHING FOR BEST
                ( LOCAL - MAIN PROGRAM'S PIVOT )
DJ(100) - VALUES OF CURRENT IN-CORE DJ'S
                (GLOBAL - MAIN PROGRAM'S COMMON / DJS / )
DJ - DJ FOR COLUMN TO BE STORED
                ( LOCAL - MAIN PROGRAM'S INSERT )
DJ - CURRENT COLUMN SENSITIVITY
                ( LOCAL - MAIN PROGRAM'S CHECK )
DJTOL - DJ TOLERANCE
                (GLOBAL - MAIN PROGRAM'S COMMON / TOLS / )
DMAX - LARGEST DJ OF STORED COLUMNS
                (GLOBAL - MAIN PROGRAM'S COMMON / MOVES / )
DOT - DOUBLE PRECISION INNER PRODUCT OF X AND Y
                ( LOCAL - MAIN PROGRAM'S DOT )
DOTS - SINGLE PRECISION INNER PRODUCT OF X AND Y
                ( LOCAL - MAIN PROGRAM'S DOT )
D(15) - DJ'S OF STORED COLUMNS
                ( LOCAL - MAIN PROGRAM'S INSERT )
DUALER - DUAL ERROR, UNUSED
                (GLOBAL - MAIN PROGRAM'S COMMON / MOVES / )
DUM1 AND DUM2 - TEMPORARY STORAGE FOR READING UNUSED SECTIONS OF TAPE
                ( LOCAL - MAIN PROGRAM'S INITA )
EKBL(25) - EKO VALUE ASSOCIATED WITH EACH NODE ON THE LIST
                (GLOBAL - MAIN PROGRAM'S COMMON / CVB / )
EKO - COST ASSOCIATED WITH THE LOWER BOUNDS OF THE NODE
                (GLOBAL - MAIN PROGRAM'S COMMON / CVB / )
ENDER - 'END'
                ( LOCAL - MAIN PROGRAM'S MAPIN )
EPSI - EPSILON VALUE FROM REAL PARAMETER CARD
                ( LOCAL - MAIN PROGRAM'S BRCAV2 )
EPSI - VALUE OF NEW BASIC VARIABLE
                ( LOCAL - MAIN PROGRAM'S PRIMAL )
ESIG - TEMPORARY STORAGE FOR EKO
                ( LOCAL - MAIN PROGRAM'S BRCAV2 )
EXIST(10,20) - NUMBER OF EACH TYPE RESOURCE AVAILABLE IN EACH YEAR
                (GLOBAL - REPORT GENERATOR'S COMMON / OUTS / )
EXT - TIME WHEN TIME LIMIT ON PROBLEM WILL EXPIRE
                (GLOBAL - MAIN PROGRAM'S COMMON / TMX / )
FNAME - PROBLEM TITLE (NOT USED)
                ( LOCAL - REPORT GENERATOR'S SETUP )
FNAME - FILE NAME
                ( LOCAL - MATRIX GENERATOR'S GENLCP )
FX1(10) - COST FUNCTION VALUES FOR LOWER BOUNDS
                ( LOCAL - MAIN PROGRAM'S GETC )
                ( LOCAL - MAIN PROGRAM'S NXBRN )
FX2(10) - COST FUNCTION VALUES FOR UPPER BOUND
                ( LOCAL - MAIN PROGRAM'S GETC )
FX2(10) - COST FUNCTION VALUES FOR SOLUTION POINT
                ( LOCAL - MAIN PROGRAM'S NXBRN )
GAMMA(101) - NOT USED
                (GLOBAL - MAIN PROGRAM'S COMMON / C / )
I - DUMMY VARIABLE
                ( LOCAL - MAIN PROGRAM'S KEYEND )
```

```
I - INPUT DISK COLUMN INDEX
                ( LOCAL - MAIN PROGRAM'S SETBND )
IA1 - DISC FILE FOR MATRIX LESS GUB ROWS
                (GLOBAL - MAIN PROGRAM'S COMMON / FILES / )
IA2 - DISC FILE FOR PACKED MATRIX LESS GUB ROWS
                (GLOBAL - MAIN PROGRAM'S COMMON / FILES / )
IB - BASIC COLUMN INDEX
                ( LOCAL - MAIN PROGRAM'S ROW )
IB - DISC INDEX OF BASIC COLUMN FOR CURRENT ROW
                ( LOCAL - MAIN PROGRAM'S KEYCH )
IB - BOUND INDEX IN IBDS
                ( LOCAL - MAIN PROGRAM'S BOUND )
IBAS - COUNT OF BASIS VARIABLES
                ( LOCAL - MAIN PROGRAM'S MAPOUT )
IBASIS(101) - BASIC COLUMNS FOR NON-GUB ROWS
                (GLOBAL - MAIN PROGRAM'S COMMON / BASIS / )
IBDS(100) - COLUMN INDICES OF BOUND COLUMNS
                (GLOBAL - MAIN PROGRAM'S COMMON / BOUNDS / )
IBMAX - MAXIMUM NUMBER OF NODES WHICH MAY BE STORED ON BLIST
                ( LOCAL - MAIN PROGRAM'S PRESET )
IBND - COUNT OF BOUND VARIABLES
                ( LOCAL - MAIN PROGRAM'S MAPOUT )
IC - CURRENT COST ROW
                (GLOBAL - MAIN PROGRAM'S COMMON / I / )
ICOST - USER'S COST ROW
                (GLOBAL - MAIN PROGRAM'S COMMON / I / )
ICOL - TEMPORARY STORAGE FOR COLUMN INDEX
                ( LOCAL - MAIN PROGRAM'S BRCAV2 )
ICX - NUMBER OF VARIABLES FOR WHICH COST SLOPES ARE TO BE DERIVED
                ( LOCAL - MAIN PROGRAM'S GETC )
ID - LOCAL ROW TYPE BEING PROCESSED
                ( LOCAL - MAIN PROGRAM'S SETUP )
ID - COLUMN NUMBER FROM MAP CARD
                ( LOCAL - MAIN PROGRAM'S MAPIN )
ID(15) - INDICES OF STORED COLUMNS
                ( LOCAL - MAIN PROGRAM'S INSERT )
IED - 'ENDTABLE'
                ( LOCAL - REPORT GENERATOR'S SETUP )
IEND - LAST YEAR OF RESOURCE EXISTANCE
                ( LOCAL - REPORT GENERATOR'S INSOLN )
IHVN (10) - POINTERS FOR INHERITED VEHICLES
                ( LOCAL - MATRIX GENERATOR'S GENLCP )
IKEY - COUNT OF KEY VARIABLES
                ( LOCAL - MAIN PROGRAM'S MAPOUT )
IKCST - TEMPORARY STORAGE OF USER'S COST ROW
                ( LOCAL - MAIN PROGRAM'S SETUP )
IMAP - FILE FOR STARTING AND TERMINATING BASIS
                (GLOBAL - MAIN PROGRAM'S COMMON / FILES / )
INDIC - INDICATES WHICH BRANCH (UPPER OR LOWER) IS BEING SOLVED
                ( LOCAL - MAIN PROGRAM'S BRCAV2 )
IND - COLUMN NUMBER TEMPORARY STORAGE
                ( LOCAL - REPORT GENERATOR'S INSOLN )
```

```
INH (10, 16) - NUMBER OF EACH TYPE RESOURCE INHERITED FROM EACH YEAR
                (GLOBAL - MATRIX GENERATOR'S COMMON / VECSTG / )
INH(10,16) - NOT USED
                (GLOBAL - REPORT GENERATOR'S COMMON / VECSTG / )
INHYRS - NUMBER OF YEARS FROM WHICH VEHICLES ARE INHERITED
                ( LOCAL - MATRIX GENERATOR'S GENLCP )
INLL - COUNT OF NULL VARIABLES
                ( LOCAL - MAIN PROGRAM'S MAPOUT )
INON - TEMPORARY NUMBER OF NON GUB ROWS FOUND
                ( LOCAL - MAIN PROGRAM'S SETUP )
INPUT - FILE CONTAINING INPUT MATRIX
                (GLOBAL - MAIN PROGRAM'S COMMON / INPUT / )
INPUTM - NUMBER OF ROWS IN MATRIX
                (GLOBAL - MAIN PROGRAM'S COMMON / INPUT / )
INPUTN - NUMBER OF COLUMNS IN MATRIX
                (GLOBAL - MAIN PROGRAM'S COMMON / INPUT / )
INVF - INVERT FREQUENCY
                (GLOBAL - MAIN PROGRAM'S COMMON / PARAMS / )
INVERS - 'INVERS'
                ( LOCAL - MAIN PROGRAM'S MAPIN )
INYR - INITIAL YEAR OF PROBLEM
                (GLOBAL - REPORT GENERATOR'S COMMON / PARAMS / )
IOPT - USED TO FLAG UNBOUNDED SOLUTION
                (GLOBAL - MAIN PROGRAM'S COMMON / CV7 / )
IORG - ORIGIN OF BASIS INVERSE
                ( LOCAL - MAIN PROGRAM'S LP )
                ( LOCAL - MAIN PROGRAM'S ROW )
                ( LOCAL - MAIN PROGRAM'S INVERT )
IORG - ORIGIN OF PIVOT ROW IN B
                ( LOCAL - MAIN PROGRAM'S PIVOT )
IORG - ORIGIN OF A ROW IN BASIS INVERSE
                ( LOCAL - MAIN PROGRAM'S XCHECK )
                ( LOCAL - MAIN PROGRAM'S KEYCH )
                ( LOCAL - MAIN PROGRAM'S FEASCH )
IPHASE - CURRENT LP PHASE
                (GLOBAL - MAIN PROGRAM'S COMMON / I / )
IPI - CURRENT LOCATION OF PI VECTOR IN BASIS
                (GLOBAL - MAIN PROGRAM'S COMMON / I / )
IPT - 'PERIOD'
                ( LOCAL - REPORT GENERATOR'S SETUP )
IP(12) - STORAGE FOR INPUT PARAMETERS ON INTEGER PARAMETER CARD
                (GLOBAL - MAIN PROGRAM'S COMMON / CV1 / )
IROWTYP(101) - USER'S INPUT ROW TYPES
                (GLOBAL - MAIN PROGRAM'S COMMON / ROWTYP / )
IROWTP(100) - INDICATES ROW TYPE J ALL SET TO ZERO EXCEPT GENERALIZED UPPER
BOUND ROWS WHICH ARE SET TO 4
                ( LOCAL - MATRIX GENERATOR'S MATFILL)
IROW - CURRENT SELECTED ROW
                (GLOBAL - MAIN PROGRAM'S COMMON / STATE / )
IROW - ROW CALLING PARAMETER, ROW OR ZERO
                ( LOCAL - MAIN PROGRAM'S ROW )
IROW - ROW TO WHICH KEY COLUMN IS SHIFTED WHEN MADE BASIC
                ( LOCAL - MAIN PROGRAM'S KEYCH )
IROW - PIVOT ROW
                ( LOCAL - MAIN PROGRAM'S PIVOT )
```

```
ISTART - FIRST YEAR OF RESOURCE EXISTANCE
                ( LOCAL - REPORT GENERATOR'S INSOLN )
ITABLE - TABLE NAME
                ( LOCAL - MATRIX GENERATOR'S GENLCP )
                ( LOCAL - REPORT GENERATOR'S SETUP )
ITEMP - TEMP. STORAGE FOR FIRST LETTER OF RNAME
                ( LOCAL - MATRIX GENERATOR'S MATFILL)
ITNINV - ITERATION OF NEXT INVERT
                (GLOBAL - MAIN PROGRAM'S COMMON / PARAMS / )
ITRN - ITERATION COUNT
                (GLOBAL - MAIN PROGRAM'S COMMON / STATE / )
ITYPE - ROW TYPE
                ( LOCAL - MAIN PROGRAM'S INVERT )
ITYPE - TYPE OF STEP. 1-UNBOUNDED. 2-COLUMN TO ZERO. 3-COLUMN   BOUND
                ( LOCAL - MAIN PROGRAM'S ROW )
                ( LOCAL - MAIN PROGRAM'S PRIMAL )
IVT - 'VEHICLE'
                ( LOCAL - REPORT GENERATOR'S SETUP )
IX(100) - INDICES OF SOLUTION COLUMNS
                (GLOBAL - MAIN PROGRAM'S COMMON / IXX / )
IX(110) - COLUMNS IN BASIC SOLUTION
                (GLOBAL - MAIN PROGRAM'S COMMON / CV4 / )
IXZ(110) - COLUMNS IN BEST SOLUTION
                (GLOBAL - MAIN PROGRAM'S COMMON / CV4 / )
IYR(10) - INITIAL YEAR OF EACH PERIOD
                (GLOBAL - REPORT GENERATOR'S COMMON / BASICS / )
J - ABSOLUTE VALUE OF I
                ( LOCAL - MAIN PROGRAM'S SETBND )
J - INPUT DISC COLUMN INDEX
                ( LOCAL - MAIN PROGRAM'S BOUND )
J1 - FIRST COLUMN IN COLUMN PRINTOUT
                ( LOCAL - MAIN PROGRAM'S XCHECK )
J2 - LAST COLUMN IN COLUMN PRINTOUT
                ( LOCAL - MAIN PROGRAM'S XCHECK )
JAJ - DISK INDEX OF AN IN-CORE COLUMN
                ( LOCAL - MAIN PROGRAM'S XCHECK )
JAJ - POTENTIAL COLUMN'S IN-CORE POSITION
                ( LOCAL - MAIN PROGRAM'S KEYEND )
JAK(101) - DUMMY STORAGE AREA
                (GLOBAL - MAIN PROGRAM'S COMMON / CORE / )
JAREJ(101) - SET TO L WHEN CORRESPONDING IN-CORE COLUMN REJECTED
                (GLOBAL - MAIN PROGRAM'S COMMON / CORE / )
JA(101) - IN-CORE COLUMN DISC INDICES
                (GLOBAL - MAIN PROGRAM'S COMMON / CORE / )
JBMAX - MAXIMUM NUMBER OF WORDS OF INFORMATION WHICH MAY BE STORED FOR
EACH NODE IN BLIST
                ( LOCAL - MAIN PROGRAM'S PRESET )
JCOL - CURRENT SELECTED COLUMN
                (GLOBAL - MAIN PROGRAM'S COMMON / STATE / )
JCOL - USER'S COLUMN INDEX OF COLUMN PROCESSED
                ( LOCAL - MAIN PROGRAM'S MAPOUT )
JCOL - CORE POSITION OF SELECTED COLUMN
                ( LOCAL - MAIN PROGRAM'S COLUMN )
                ( LOCAL - MAIN PROGRAM'S IO )
                ( LOCAL - MAIN PROGRAM'S ROW )
```

```
JCOL - COLUMN TO BE MOVED
                ( LOCAL - MAIN PROGRAM'S KEYCH )
JCOLPK - SUB PACKET OF COLUMN BEING MOVED FROM KEY
                ( LOCAL - MAIN PROGRAM'S KEYCH )
JCOUNT - COUNT OF COLUMNS PROCESSED
                ( LOCAL - MAIN PROGRAM'S CHECK )
JEND - ORIGIN OF VACANT WORK SPACE IN AJ
                ( LOCAL - MAIN PROGRAM'S XCHECK )
JERCH - NUMBER OF COLUMNS CHECKED IN CURRENT BATCH
                ( LOCAL - MAIN PROGRAM'S CHECK )
JKEY - CORE POSITION OF KEY FOR JCOL (IF SUB ROW)
                ( LOCAL - MAIN PROGRAM'S COLUMN )
JKEY - CANDIDATE KEY COLUMN
                ( LOCAL - MAIN PROGRAM'S KEYCH )
JNCORE - NUMBER OF COLUMNS IN CORE
                (GLOBAL - MAIN PROGRAM'S COMMON / LIMS / )
                ( LOCAL - MAIN PROGRAM'S MAPOUT )
JNSCAN - COLUMNS IN CORE + 1000* NUMBER OF REWINDS OF FILE IA1
                ( LOCAL - MAIN PROGRAM'S STATUS )
JNT - INDEX OF COLUMNS READ
                ( LOCAL - MAIN PROGRAM'S IO )
JNT - CURRENT COLUMN INDEX
                ( LOCAL - MAIN PROGRAM'S CHECK )
                ( LOCAL - MAIN PROGRAM'S INVERT )
JNT - LAST COLUMN READ FROM DISC (IF MNTRY = 0)
                ( LOCAL - MAIN PROGRAM'S STATUS )
JNTO - INDEX OF LAST COLUMN READ FROM DISC
                ( LOCAL - MAIN PROGRAM'S STATUS )
JORG - CORE ORIGIN OF SELECTED COLUMN
                ( LOCAL - MAIN PROGRAM'S ROW )
JORG - ORIGIN OF VACANCY FOR COLUMN IN AJ
                ( LOCAL - MAIN PROGRAM'S INSERT )
JORG - ORIGIN IN AJ TO WHICH COLUMN IS READ
                ( LOCAL - MAIN PROGRAM'S CHECK )
                ( LOCAL - MAIN PROGRAM'S INVERT )
JORG - ORIGIN OF A ROW IN B
                ( LOCAL - MAIN PROGRAM'S KEYCH )
                ( LOCAL - MAIN PROGRAM'S COLUMN )
                ( LOCAL - MAIN PROGRAM'S PIVOT )
JORG - ORIGIN OF A COLUMN IN AJ
                ( LOCAL - MAIN PROGRAM'S XCHECK )
JOUT - REJECTED COLUMN INDEX
                (GLOBAL - MAIN PROGRAM'S COMMON / STATE / )
JOUT - COLUMN TO BE REJECTED
                ( LOCAL - MAIN PROGRAM'S ROW )
JOUTPK - SUB PACKET OF COLUMN REJECTED
                ( LOCAL - MAIN PROGRAM'S PRIMAL )
JP - BASIC COLUMN FOR A ROW
                ( LOCAL - MAIN PROGRAM'S PIVOT )
JPKT - SUB PACKET OF NEW COLUMN
                ( LOCAL - MAIN PROGRAM'S COLUMN )
                ( LOCAL - MAIN PROGRAM'S ROW )
```

```
JPKT - GUB PACKET OF CURRENT COLUMN
                ( LOCAL - MAIN PROGRAM'S FEASCH )
                ( LOCAL - MAIN PROGRAM'S KEYFND )
JPKTO - CURRENT STORED GUB KEY PACKET
                ( LOCAL - MAIN PROGRAM'S COLUMN )
JPOS - SELECTED COLUMN INDEX
                (GLOBAL - MAIN PROGRAM'S COMMON / STATE / )
JPOS - DISC INDEX OF COLUMN SELECTED
                ( LOCAL - MAIN PROGRAM'S ROW )
JPOS - DISC INDEX OF COLUMN TO BE STORED
                ( LOCAL - MAIN PROGRAM'S INSERT )
JPOSPK - GUB PACKET OF COLUMN ENTERING
                ( LOCAL - MAIN PROGRAM'S PRIMAL )
JPOSR- DISC INDEX OF COLUMN TO BE REJECTED
                ( LOCAL - MAIN PROGRAM'S INSERT )
JREJ - ORIGIN OF REJECTED COLUMN IN AJ
                ( LOCAL - MAIN PROGRAM'S INSERT )
JRHS - USER'S INPUT RHS
                (GLOBAL - MAIN PROGRAM'S COMMON / I / )
JSUB(10) - POINTERS FOR VEHICLE SUBSCRIPTS
                ( LOCAL - MATRIX GENERATOR'S YINTERP )
JTYPE - VARIABLE TYPE
                ( LOCAL - MAIN PROGRAM'S INVERT )
JTYPE - COLUMN TYPE
                ( LOCAL - MAIN PROGRAM'S KEYFND )
                ( LOCAL - MAIN PROGRAM'S CHECK )
                ( LOCAL - MAIN PROGRAM'S COLUMN )
K - NEW STATE
                ( LOCAL - MAIN PROGRAM'S SETBND )
K1 - NOT USED
                (GLOBAL - MAIN PROGRAM'S COMMON / PARAMS / )
K2 - NOT USED
                (GLOBAL - MAIN PROGRAM'S COMMON / PARAMS / )
K3 - OUTPUT CONTROL PARAMETER
                (GLOBAL - MAIN PROGRAM'S COMMON / PARAMS / )
K4 - XCHECK CONTROL PARAMETER
                (GLOBAL - MAIN PROGRAM'S COMMON / PARAMS / )
K5 - MAXIMUM LP ITERATIONS BEFORE MAPOUT
                (GLOBAL - MAIN PROGRAM'S COMMON / PARAMS / )
KEF - 'KEY'
                ( LOCAL - MAIN PROGRAM'S MAPIN )
KEY - INDEX OF KEY COLUMN TO BE LOCATED
                ( LOCAL - MAIN PROGRAM'S IO )
                ( LOCAL - MAIN PROGRAM'S KEYFND )
KEY - SWITCH TO RETURN KEY PROCESSING TO KEY LOOP
                ( LOCAL - MAIN PROGRAM'S FEASCH )
KEYS(101)-STORAGE OF GUB KEY COLUMNS
                (GLOBAL - MAIN PROGRAM'S COMMON / BASIS / )
KEYFND - POSITION OF KEY FOUND
                ( LOCAL - MAIN PROGRAM'S KEYFND )
KOL - COLUMN TO BE LOCATED ON EITHER FILE, OR PACKET NUMBER OF DESIRED KEY
                ( LOCAL - MAIN PROGRAM'S IO )
KOL1 - LAST COLUMN READ, ON FILE IA1
                ( LOCAL - MAIN PROGRAM'S IO )
```

```
KOL2 - LAST COLUMN READ ON FILE IA2
                ( LOCAL - MAIN PROGRAM'S IO )
KORG - ORIGIN IN AJ TO WHICH KEY COLUMN IS READ
                ( LOCAL - MAIN PROGRAM'S INVERT )
KORG - ORIGIN OF KEY COLUMN FOR PACKET JPKT
                ( LOCAL - MAIN PROGRAM'S POW )
KORG - ORIGIN OF KEY COLUMN IN AJ
                ( LOCAL - MAIN PROGRAM'S CHECK )
                ( LOCAL - MAIN PROGRAM'S COLUMN )
L - NUMBER OF SUB ROWS
                (GLOBAL - MAIN PROGRAM'S COMMON / I / )
LAST - LAST YEAR OF PROBLEM
                (GLOBAL - REPORT GENERATOR'S COMMON / PARAMS / )
LEND - LENGTH OF PERIOD UNDER CONSIDERATION
                (GLOBAL - MATRIX GENERATOR'S COMMON / VECSTG / )
                (GLOBAL - REPORT GENERATOR'S COMMON / VECSTG / )
LIFER - TEMP. STORAGE FOR REMAINING USEFUL LIFE OF A VEHICLE
                ( LOCAL - MATRIX GENERATOR'S GENLCP )
LSTMAX - MAXIMUM LENGTH WHICH THE BRANCHING LIST HAS ACHIEVED
                (GLOBAL - MAIN PROGRAM'S COMMON / CV5 / )
LSTFRE(25) - GIVES LOCATIONS OF STORAGE AREAS ON THE BRANCHING LIST WHICH
ARE VACANT
                ( LOCAL - MAIN PROGRAM'S BRCAV2 )
LY - LAST YEAR OF A PROBLEM
                ( LOCAL - MATRIX GENERATOR'S GENLCP )
LYR(10) - LAST YEAR OF EACH PERIOD
                (GLOBAL - REPORT GENERATOR'S COMMON / BASICS / )
M - NUMBER OF ACTIVE INTERNAL ROWS
                (GLOBAL - MAIN PROGRAM'S COMMON / I / )
M - NUMBER OF ROWS IN MATRIX
                (GLOBAL - MAIN PROGRAM'S COMMON / CV3 / )
M - VECTOR DIMENSION
                ( LOCAL - MAIN PROGRAM'S DCT )
MAPBND(100) - BOUND COLUMN INDICES
                ( LOCAL - MAIN PROGRAM'S MAPOUT )
MAPBAS(100) - BASIC COLUMN INDICES
                ( LOCAL - MAIN PROGRAM'S MAPOUT )
MAPKEY(1000) - KEY COLUMN INDICES
                ( LOCAL - MAIN PROGRAM'S MAPOUT )
MAPNLL(10) - NULL COLUMN INDICES
                ( LOCAL - MAIN PROGRAM'S MAPOUT )
MAXL - TEMP. STORAGE FOR VEHICLE LIFE
                ( LOCAL - MATRIX GENERATOR'S GENLCP )
MAXTRY - MAXIMUM NUMBER OF IN-CORE ITERATIONS
                (GLOBAL - MAIN PROGRAM'S COMMON / LIMS / )
MC - LAST LOGICAL COLUMN
                (GLOBAL - MAIN PROGRAM'S COMMON / I / )
MCOL - NUMBER OF COLUMNS IN MATRIX
                ( LOCAL - MATRIX GENERATOR'S GENLCP )
MM - NUMBER OF ELEMENTS IN BASIS INVERSE
                ( LOCAL - MAIN PROGRAM'S MAPOUT )
                ( LOCAL - MAIN PROGRAM'S MAPIN )
MNC - THE NEGATIVE OF NCE
                ( LOCAL - MAIN PROGRAM'S BRCAV2 )
```

```
MNTRY - NUMBER OF IN-CORE ITERATIONS
                ( LOCAL - MAIN PROGRAM'S STATUS )
MNX - THE NEGATIVE OF N
                ( LOCAL - MAIN PROGRAM'S BBCAV2 )
MP1 - M PLUS 1
                ( LOCAL - MAIN PROGRAM'S MAPOUT )
MPK - ROW OF COLUMN WHICH WAS KEY
                ( LOCAL - MAIN PROGRAM'S KEYCH )
MPLUS - NUMBER OF ROWS IN THE MATRIX INCLUDING THE COST ROW (M+1)
                (GLOBAL - MAIN PROGRAM'S COMMON / CV3 / )
MPL - M PLUS L
                (GLOBAL - MAIN PROGRAM'S COMMON / I / )
MROWS - USER'S NUMBER OF ROWS
                ( LOCAL - MAIN PROGRAM'S LP )
N - NUMBER OF COLUMNS IN MATRIX
                (GLOBAL - MAIN PROGRAM'S COMMON / CV3 / )
N - NUMBER OF COLUMNS CURRENTLY SAVED
                ( LOCAL - MAIN PROGRAM'S INSERT )
NAAM - NOT USED
                ( LOCAL - MAIN PROGRAM'S IO )
NAMEN (10) - POINTERS FOR NUMBERING RESOURCES
                (GLOBAL - MATRIX GENERATOR'S COMMON / VECSTG / )
NAMEN(10) - NOT USED
                (GLOBAL - REPORT GENERATOR'S COMMON / VECSTG / )
NAMES(5) - COLUMN INDICES FROM MAP CARD
                ( LOCAL - MAIN PROGRAM'S MAPIN )
NAMES (10) - TEMPORARY POINTERS
                ( LOCAL - MATRIX GENERATOR'S GENLCP )
NAME(600) - STATE OF EACH VARIABLE OR COLUMN
                (GLOBAL - MAIN PROGRAM'S COMMON / NAMES / )
NAME - COLUMN NAME, OR POSITION IN CORE TO WHICH COLUMN IS READ
                ( LOCAL - MAIN PROGRAM'S IO )
NB - NUMBER OF BASIC VARIABLES IN A PACKET
                ( LOCAL - MAIN PROGRAM'S FEASCH )
NBCH - NUMBER OF COLUMNS IN BATCH
                ( LOCAL - MAIN PROGRAM'S CHECK )
NBDS - NUMBER OF BOUNDS
                (GLOBAL - MAIN PROGRAM'S COMMON / BOUNDS / )
NBVPKT - NUMBER OF BASIS VARIABLE IN SELECTED GUB ROW
                ( LOCAL - MAIN PROGRAM'S PRIMAL )
NC - NUMBER OF BASIS CARDS TO BE READ FROM INPUT
                ( LOCAL - MAIN PROGRAM'S READIN )
NCF - NUMBER OF NON-LINEAR VARIABLES
                (GLOBAL - MAIN PROGRAM'S COMMON / CV3 / )
NCF1 - NCF
                ( LOCAL - MAIN PROGRAM'S BBCAV2 )
NCF4 - NORA + 3 * NCF
                ( LOCAL - MAIN PROGRAM'S BBCAV2 )
NCHGS - USER'S NUMBER OF BOUND COLUMNS
                ( LOCAL - MAIN PROGRAM'S LP )
NCOLS - NUMBER OF COLUMNS READ FROM DISC FILE IA1
                ( LOCAL - MAIN PROGRAM'S STATUS )
```

```
NCOLS - USER'S NUMBER OF COLUMNS
                ( LOCAL - MAIN PROGRAM'S LP )
NCORE - NUMBER OF COLUMNS IN CORE
                ( LOCAL - MAIN PROGRAM'S COLUMN )
NCRMAX - MAXIMUM NUMBER OF COLUMNS WHICH FIT IN CORE
                (GLOBAL - MAIN PROGRAM'S COMMON / LIMS / )
NDEGLM - MAXIMUM REJECTION DUE TO DEGENERACY
                ( LOCAL - MAIN PROGRAM'S PRIMAL )
NDEG - NUMBER OF DEGENERACY REJECTIONS
                ( LOCAL - MAIN PROGRAM'S PRIMAL )
NDJS - NUMBER OF NEGATIVE DJ'S
                (GLOBAL - MAIN PROGRAM'S COMMON / STATE / )
NDJST - NUMBER OF NEGATIVE DJ'S FROM DISK READ
                ( LOCAL - MAIN PROGRAM'S COLUMN )
NDX(10) - INDICES OF NON-LINEAR VARIABLES
                ( LOCAL - MAIN PROGRAM'S NXBPN )
NEM1 - NUMBER OF ELEMENTS IN AN ARRAY MINUS ONE
                ( LOCAL - MAIN PROGRAM'S GETASO )
NEWXZ - FLAGS WHEN NEW BEST SOLUTION FOUND AND SHOULD BE OUTPUT
                (GLOBAL - MAIN PROGRAM'S COMMON / CV7 / )
NEWROW - ROW FOR COLUMN CHANGING FROM KEY TO BASIC
                ( LOCAL - MAIN PROGRAM'S PRIMAL )
NF1 - SIGNIFIES FEASIBLE SOLUTION WHEN SET EQUAL TO 1
                (GLOBAL - MAIN PROGRAM'S COMMON / CV / / )
NFRCH - NUMBER OF COLUMNS RETAINED FROM BATCH
                ( LOCAL - MAIN PROGRAM'S CHECK )
NFREE - NUMBER OF GAPS (EMPTY LOCATION BETWEEN TWO FILLED LOCATIONS) IN
THE BLIST
                ( LOCAL - MAIN PROGRAM'S BRCAV2 )
NFX - THE NEGATIVE OF NCF
                ( LOCAL - MAIN PROGRAM'S NXBPN )
NINHP - NUMBER OF INHERITED PERIODS
                ( LOCAL - MATRIX GENERATOR'S GENLCP )
NIV - NUMBER OF INHERITED VEHICLE TYPES
                ( LOCAL - MATRIX GENERATOR'S GENLCP )
NJOUT - NAME CODE OF COLUMN TO BE REJECTED
                ( LOCAL - MAIN PROGRAM'S STATUS )
NL (10) - TEMP. STORAGE USED IN FORMATTING OUTPUT
                ( LOCAL - MATRIX GENERATOR'S GENLCP )
NMIN - INDEX OF THE LOWEST BOUND ON THE BLIST, OR N-1, DEPENDING ON WHERE
IT IS USED
                ( LOCAL - MAIN PROGRAM'S BRCAV2 )
NN (10) TEMP. STORAGE USED IN FORMATTING OUTPUT
                ( LOCAL - MATRIX GENERATOR'S GENLCP )
NOBOL - NUMBER OF NODES ON LIST
                (GLOBAL - MAIN PROGRAM'S COMMON / CVB / )
NOL - INDEX FOR STORAGE ON BLIST
                ( LOCAL - MAIN PROGRAM'S BRCAV2 )
NOP - NODE NUMBER
                (GLOBAL - MAIN PROGRAM'S COMMON / CV / / )
NOPS - NODES SOLVED
                (GLOBAL - MAIN PROGRAM'S COMMON / CV7 / )
```

```
NORA - NUMBER OF ROWS IN THE MATRIX INCLUDING THE OBJECTIVE FUNCTION
                ( LOCAL - MAIN PROGRAM'S BRCAV2 )
                ( LOCAL - MAIN PROGRAM'S PRESET )
NOTE(4) - 40 CHARACTER COMMENT
                ( LOCAL - MAIN PROGRAM'S STATUS )
NP - NUMBER OF SUBPERIODS
                (GLOBAL - REPORT GENERATOR'S COMMON / PARAMS / )
NPRCH   NUMBER OF COLUMNS TO BE SAVED FROM BATCH
                ( LOCAL - MAIN PROGRAM'S INSERT )
NPERYR (10, 3) - FIRST AND LAST YEAR OF PERIOD AND NUMBER OF TASKS IN PERIOD
                (GLOBAL - MATRIX GENERATOR'S COMMON / PRDSIG / )
NPHASE - STORES LP PHASE CODE
                (GLOBAL - MAIN PROGRAM'S COMMON / CV / / )
NPIF - NUMBER OF PRIMAL INFEASIBILITIES
                (GLOBAL - MAIN PROGRAM'S COMMON / STATE / )
NPP - NUMBER OF PERIODS
                ( LOCAL - MATRIX GENERATOR'S GENLCP )
NPTASK (10, 9) - ID NUMBER OF EACH TASK IN PERIOD
                (GLOBAL - MATRIX GENERATOR'S COMMON / PRDSIG / )
NPT - NUMBER OF PERIOD TABLES READ
                ( LOCAL - MATRIX GENERATOR'S GENLCP )
                ( LOCAL - REPORT GENERATOR'S SETUP )
NRD - NUMBER OF VEHICLES HAVING R AND D
                ( LOCAL - MATRIX GENERATOR'S GENLCP )
NREJ - NUMBER OF REJECTED IN-CORE COLUMNS
                (GLOBAL - MAIN PROGRAM'S COMMON / STATE / )
NROW - NUMBER OF ROWS IN MATRIX
                ( LOCAL - MATRIX GENERATOR'S GENLCP )
NV - NUMBER OF RESOURCE TYPES
                (GLOBAL - REPORT GENERATOR'S COMMON / PARAMS / )
NSCAN - NUMBER OF DISC READS
                (GLOBAL - MAIN PROGRAM'S COMMON / LIMS / )
NT - NUMBER OF TASKS
                ( LOCAL - MATRIX GENERATOR'S GENLCP )
NT - TOTAL NUMBER OF COLUMNS (MC+INPUTN)
                (GLOBAL - MAIN PROGRAM'S COMMON / I / )
NT - NUMBER OF TASKS (NOT USED)
                ( LOCAL - REPORT GENERATOR'S SETUP )
NTR - NUMBER OF TASK TABLES READ
                ( LOCAL - MATRIX GENERATOR'S GENLCP )
NTRY - NUMBER OF IN-CORE ITERATIONS
                (GLOBAL - MAIN PROGRAM'S COMMON / LIMS / )
NTSK (9) - NUMBER OF ALTERNATIVES IN TASK
                (GLOBAL - MATRIX GENERATOR'S COMMON / TSKSIG / )
NULL - 'NULL'
                ( LOCAL - MAIN PROGRAM'S MAPIN )
NULL - COLUMN STATE
                ( LOCAL - MAIN PROGRAM'S COLUMN )
NV - NUMBER OF VEHICLE TYPES
                ( LOCAL - MATRIX GENERATOR'S GENLCP )
NVEHU (10) - INDICATES IF VEHICLE USED IN PERIOD
                ( LOCAL - MATRIX GENERATOR'S GENLCP )
```

```
NVR - NUMBER OF VEHICLE TABLES READ
                ( LOCAL - MATRIX GENERATOR'S GENLCP )
                ( LOCAL - REPORT GENERATOR'S SETUP )
NWAJ - STORAGE DIMENSION OF THE ARRAY AJ
                ( LOCAL - MAIN PROGRAM'S LP )
NXBX - INDEX OF BRANCHING VARIABLE
                (GLOBAL - MAIN PROGRAM'S COMMON / CVH / )
NXBL(25) - INDEX OF BRANCHING VARIABLE FOR EACH NODE
                (GLOBAL - MAIN PROGRAM'S COMMON / CV9 / )
NXB - TEMPORARY STORAGE FOR NEXT BRANCHING VARIABLE
                ( LOCAL - MAIN PROGRAM'S BRCAV2 )
NYR - TEMP. STORAGE FOR LAST YEAR OF PERIOD
                ( LOCAL - MATRIX GENERATOR'S GENLCP )
OANDM(20) - OPERATING COST FOR EACH YEAR
                (GLOBAL - REPORT GENERATOR'S COMMON / OCTS / )
ONE - '01'
                ( LOCAL - REPORT GENERATOR'S CINFO )
ONE - 1.0
                ( LOCAL - MATRIX GENERATOR'S GENLCP )
ONEM - -1.0
                ( LOCAL - MATRIX GENERATOR'S GENLCP )
PACK(100) - TEMPORARY STORAGE OF PACKED COLUMN
                ( LOCAL - MAIN PROGRAM'S IO )
PER(10) - POINTERS FOR TWO DIGIT, ALPHANUMERIC CODE FOR PERIODS
                (GLOBAL - REPORT GENERATOR'S COMMON / BASICS / )
PERIOD - 'PERIOD'
                ( LOCAL - REPORT GENERATOR'S CINFO )
                ( LOCAL - REPORT GENERATOR'S PINFO )
PH1 AND PH2 - TEMPORARY STORAGE OF VALUES FROM GETPHI
                ( LOCAL - MAIN PROGRAM'S BRCAV2 )
PHIT - COST OF A NON-LINEAR SOLUTION
                (GLOBAL - MAIN PROGRAM'S COMMON / CV3 / )
PIKEY - DJ VALUE FOR CURRENT KEY JPKT
                ( LOCAL - MAIN PROGRAM'S COLUMN )
PIKEY - DJ FOR CURRENT KEY AT KORG
                ( LOCAL - MAIN PROGRAM'S CHECK )
PIVTOL - PIVOT TOLERANCE
                (GLOBAL - MAIN PROGRAM'S COMMON / TOLS / )
PIV - PIVOT USED
                ( LOCAL - MAIN PROGRAM'S PIVOT )
PKT1 - TEMPORARY COUNT OF SUB ROW PACKET COLUMNS
                ( LOCAL - MAIN PROGRAM'S SETUP )
PKT - ACTUAL SUB ROW COLUMN BEING PROCESSED
                ( LOCAL - MAIN PROGRAM'S SETUP )
PKT - STORAGE OF COLUMN PACKET
                ( LOCAL - MAIN PROGRAM'S MAIN )
PKT - SUB PACKET NUMBER OF COLUMN BEING PROCESSED
                ( LOCAL - MAIN PROGRAM'S INVERT )
PKT - PACKET OF NEW COLUMN, JNT
                ( LOCAL - MAIN PROGRAM'S CHECK )
PKT - SUB PACKET OF DESIRED KEY
                ( LOCAL - MAIN PROGRAM'S KEYEND )
PKTO - SUB PACKET NUMBER OF COLUMN IN AJ(KORG)
PKTO - PACKET OF CURRENT KEY
                ( LOCAL - MAIN PROGRAM'S CHECK )
                ( LOCAL - MAIN PROGRAM'S INVERT )
```

```
PMIN - VALUE OF LOWEST BOUND ON BLIST
                ( LOCAL - MAIN PROGRAM'S BRCAV2 )
PERTOL - PRIMAL ERROR TOLERANCE
                (GLOBAL - MAIN PROGRAM'S COMMON / TOLS / )
PRMLER - PRIMAL ERROR, UNUSED
                (GLOBAL - MAIN PROGRAM'S COMMON / MOVES / )
PROC(20) - PROCUREMENT FUNDS SPENT DURING EACH PERIOD
                (GLOBAL - REPORT GENERATOR'S COMMON / OUTS / )
PROT(20) - PROCUREMENT FUNDS AVAILABLE DURING EACH PERIOD
                (GLOBAL - REPORT GENERATOR'S COMMON / OUTS / )
PSIGL(25) - LOWER BOUND ASSOCIATED WITH EACH NODE ON LIST
                (GLOBAL - MAIN PROGRAM'S COMMON / CV9 / )
PTASK (10, 9) - MULTIPLICATIVE FACTOR FOR ALL VALUES IN ASSOCIATED TASK FOR
EACH PERIOD
                (GLOBAL - MATRIX GENERATOR'S COMMON / PROJTG / )
PURCH(10,20) - NUMBER OF EACH TYPE RESOURCE PURCHASED IN EACH YEAR
                (GLOBAL - REPORT GENERATOR'S COMMON / OUTS / )
R - RATE OF INCREASE IN OPERATING COST
                ( LOCAL - MATRIX GENERATOR'S YRCOST )
R - 'RHS'
                ( LOCAL - MATRIX GENERATOR'S MATFILL)
R1 - PORTION OF OPERATING COST REFUNDED FOR MOTH BALLING RESOURCE
                ( LOCAL - MATRIX GENERATOR'S YRCOST )
RDTOT - TOTAL R AND D EXPENDITURES
                (GLOBAL - REPORT GENERATOR'S COMMON / PARAMS / )
RHS(100) - STORES USER'S CURRENT RIGHT HAND SIDE
                (GLOBAL - MAIN PROGRAM'S COMMON / RHS / )
RNAME(120) - ROW NAMES
                ( LOCAL - MATRIX GENERATOR'S MATFILL)
ROWS - 'ROWS'
                ( LOCAL - MAIN PROGRAM'S MAPIN )
RP(12) - STORAGE FOR REAL PARAMETERS, FIRST FOUR LOCATIONS ARE FOR INPUT
FROM REAL PARAMETER CARD, REST ARE TEMPORARY STORAGE
                (GLOBAL - MAIN PROGRAM'S COMMON / CV1 / )
RTEMP - TEMP. STORAGE FOR ROW NAMES
                ( LOCAL - MATRIX GENERATOR'S MATFILL)
RVAL(100) - VECTOR OF VALUES IN EACH ROW FOR A SPECIFIC COLUMN
                ( LOCAL - MATRIX GENERATOR'S MATFILL)
S - 'S'
                ( LOCAL - REPORT GENERATOR'S INSOLN )
SALF(20) - SALVAGE OR TRUNCATION VALUE FOR EACH YEAR
                (GLOBAL - REPORT GENERATOR'S COMMON / OUTS / )
SALV(10,20) - NUMBER OF EACH TYPE RESOURCE DISPOSED OF AT END OF EACH YEAR
                (GLOBAL - REPORT GENERATOR'S COMMON / OUTS / )
SAVE(20) - SAVINGS FROM RESOURCE STORAGE FOR EACH YEAR
                (GLOBAL - REPORT GENERATOR'S COMMON / OUTS / )
SECS - ACTUAL CPU CLOCK TIME
                ( LOCAL - MAIN PROGRAM'S TIMEC )
SIGMA(100,4) - STORES INFORMATION WHICH DEFINES THE CURRENT NODE
                (GLOBAL - MAIN PROGRAM'S COMMON / CV5 / )
STEP - STEP TO CURRENT ROW
                ( LOCAL - MAIN PROGRAM'S ROW )
STOR(10,20) - NUMBER OF EACH TYPE RESOURCE STORED IN EACH YEAR
                (GLOBAL - REPORT GENERATOR'S COMMON / OUTS / )
```

```
SUM - VALUE OF VARIABLE BEFORE FEASIBILITY ADJUSTMENT
                ( LOCAL - MAIN PROGRAM'S FEASCH )
SUM - TEMPORARY STORAGE
                ( LOCAL - MAIN PROGRAM'S KEYCH )
SUM - DOUBLE PRESISION ACCUMULATOR
                ( LOCAL - MAIN PROGRAM'S OCI )
SUM - TOTAL COST FOR A PERIOD
                ( LOCAL - REPORT GENERATOR'S CINFO )
SUMIE - SUM OF INFEASIBILITIES
                ( LOCAL - MAIN PROGRAM'S FEASCH )
SUMT - TOTAL COST FOR ALL PERIODS
                ( LOCAL - REPORT GENERATOR'S CINFO )
SY - START YEAR OF PROBLEM
                ( LOCAL - MATRIX GENERATOR'S GENLCP )
T(100,10) - STORAGE FOR COLUMNS OF MATRIX ASSOCIATED WITH NON-LINEAR
VARIABLES
                (GLOBAL - MAIN PROGRAM'S COMMON / CV2 / )
TCOST - TEMP STORAGE FOR TOTAL PROCUREMENT
                ( LOCAL - REPORT GENERATOR'S CINFO )
TEMP - LOCATION USED WHILE SWAPPING CONTENTS OF TWO LOCATIONS IN AN ARRAY
                ( LOCAL - MAIN PROGRAM'S GETASO )
TEMP1 - TEMPORARY STORAGE LOCATIONS FOR ALPHANUMERIC OUTPUT
                ( LOCAL - REPORT GENERATOR'S PINFO )
TEMP2 - TEMPORARY STORAGE LOCATIONS FOR ALPHANUMERIC OUTPUT
                ( LOCAL - REPORT GENERATOR'S PINFO )
TEMP(4) - TEMP STORAGE FOR COLUMN NAMES
                ( LOCAL - REPORT GENERATOR'S SETUP )
THETA - STEP CHOSEN BY ROW. ADJUSTED IN PRIMAL
                (GLOBAL - MAIN PROGRAM'S COMMON / MOVES / )
THETA - BEST FEASIBLE STEP
                ( LOCAL - MAIN PROGRAM'S ROW )
TITLE(4) - ALPHANUMERIC TITLE OF PROBLEM
                ( LOCAL - MAIN PROGRAM'S PRCAV2 )
                (GLOBAL - REPORT GENERATOR'S COMMON / PARAMS / )
TMAX - MAXIMUM TIME BEFORE MAROUT
                (GLOBAL - MAIN PROGRAM'S COMMON / PARAMS / )
TMO - TIME SET WAS CALLED
                (GLOBAL - MAIN PROGRAM'S COMMON / TMX / )
TMP(10) - TEMPORARY STORAGE
                (GLOBAL - MAIN PROGRAM'S COMMON / CV1 / )
TOT - NUMBER OF SUBPERIODS PLUS 1
                (GLOBAL - REPORT GENERATOR'S COMMON / PARAMS / )
TOTAL - 'TOTAL'
                ( LOCAL - REPORT GENERATOR'S CINFO )
                ( LOCAL - REPORT GENERATOR'S PINFO )
TPROC - CORRECTION FACTOR FOR PROCUREMENT
                ( LOCAL - REPORT GENERATOR'S CINFO )
TSIG - TEMPORARY STORAGE ASSOCIATED WITH EKO
                (GLOBAL - MAIN PROGRAM'S COMMON / CVE / )
TSTO(130) - TEMPORARY STORAGE
                ( LOCAL - MAIN PROGRAM'S PRCAV2 )
TYPE1 - FIRST WORD ON MAP CARD
                ( LOCAL - MAIN PROGRAM'S MAPIN )
```

```
TYPE2 - SECOND WORD ON MAP CARD
                ( LOCAL - MAIN PROGRAM'S MAPIN )
U (7, 288, 9) - ARRAY OF TASK ALTERNATIVES
                (GLOBAL - MATRIX GENERATOR'S COMMON / TSKSTG / )
UB (10) - CALCULATED UPPER BOUNDS ON RESOURCES
                ( LOCAL - MATRIX GENERATOR'S GENLCP )
UBK - UPPER BOUND ON BRANCHING VARIABLE
                ( LOCAL - MAIN PROGRAM'S BRCAV2 )
UBK2 - DIFFERENCE BETWEEN UPPER BOUND AND VALUE FOR BRANCHING VARIABLE
                ( LOCAL - MAIN PROGRAM'S BRCAV2 )
ULO(10) - SET OF UPPER BOUNDS ON NON-LINEAR VARIABLES
                (GLOBAL - MAIN PROGRAM'S COMMON / CV2 / )
ULT(10) - TEMPORARY STORAGE FOR ULO
                ( LOCAL - MAIN PROGRAM'S BRCAV2 )
UMAX - TEMP. STORAGE FOR GREATEST QUANTITY OF A SPECIFIC VEHICLE WHICH MIGHT
BE USED IN A TASK
                ( LOCAL - MATRIX GENERATOR'S GENLCP )
US - TEMPORARY STORAGE FOR USP
                ( LOCAL - MAIN PROGRAM'S BRCAV2 )
USM = UZ/(1-F)
                (GLOBAL - MAIN PROGRAM'S COMMON / CV3 / )
USP = UZ/(1+F)
                (GLOBAL - MAIN PROGRAM'S COMMON / CV3 / )
UZ - COST OF BEST NON-LINEAR SOLUTION
                (GLOBAL - MAIN PROGRAM'S COMMON / CV3 / )
VAL - COLUMN VALUE TEMPORARY STORAGE
                ( LOCAL - REPORT GENERATOR'S INSOLN )
VAL - TEMP. STORAGE FOR VALUE OF SPECIFIC ROW AND COLUMN
                ( LOCAL - MATRIX GENERATOR'S MAIFILL)
VCOST(10,5) - THE FIVE COSTS ASSOCIATED WITH EACH RESOURCE ARE STORED IN
THIS ARRAY - IN ORDER, THEY ARE SALVAGE AND TRUNCATION, OPERATING, R AND D,
RETENTION RATE, AND PROCUREMENT.
                (GLOBAL - MATRIX GENERATOR'S COMMON / VECSTG / )
                (GLOBAL - REPORT GENERATOR'S COMMON / VECSTG / )
VLIFE (10) - MAXIMUM LIFE OF RESOURCE (VEHICLE)
                (GLOBAL - MATRIX GENERATOR'S COMMON / VECSTG / )
                (GLOBAL - REPORT GENERATOR'S COMMON / VECSTG / )
VMIN  - TEMP. STORAGE FOR MINIMUM QUANTITY OF VEHICLES WHICH CAN BE USED FOR
TASK
                ( LOCAL - MATRIX GENERATOR'S YINTERP )
VNAME(10) - STORES RESOURCE NAMES
                (GLOBAL - MATRIX GENERATOR'S COMMON / VECSTG / )
                (GLOBAL - REPORT GENERATOR'S COMMON / VECSTG / )
W - 'W'
                ( LOCAL - REPORT GENERATOR'S INSOLN )
X - INPUT VECTOR
                ( LOCAL - MAIN PROGRAM'S DOT )
X - 'X'
                ( LOCAL - REPORT GENERATOR'S INSOLN )
X - ELAPSED CPU SECONDS
                ( LOCAL - MAIN PROGRAM'S STATUS )
XCON(10) - STORES VALUES FOUND IN X WHICH ARE ASSOCIATED WITH THE
NON-LINEAR VARIABLES
                (GLOBAL - MAIN PROGRAM'S COMMON / CV4 / )
```

```
XK - VALUE OF BRANCHING VARIABLE
                (GLOBAL - MAIN PROGRAM'S COMMON / CV8 / )
XNXBL(25) - VALUE OF BRANCHING VARIABLE FOR EACH NODE
                (GLOBAL - MAIN PROGRAM'S COMMON / CV9 / )
XT(10) - SOLUTION VALUES FOR NON-LINEAR VARIABLE
                ( LOCAL - MAIN PROGRAM'S NXBRN )
XX- ELAPSED TIME ON PROBLEM
                ( LOCAL - MAIN PROGRAM'S TIMEC )
X(100) - VALUES OF SOLUTION COLUMNS
                (GLOBAL - MAIN PROGRAM'S COMMON / AA / )
X(110) - VALUES ASSOCIATED WITH COLUMNS IN IX
                (GLOBAL - MAIN PROGRAM'S COMMON / CV4 / )
XZ(110) - VALUES ASSOCIATED WITH COLUMNS IN IXZ
                (GLOBAL - MAIN PROGRAM'S COMMON / CV4 / )
Y - INPUT VECTOR
                ( LOCAL - MAIN PROGRAM'S DOT )
YAVL (10) - YEAR RESOURCE FIRST AVAILABLE
                (GLOBAL - MATRIX GENERATOR'S COMMON / ALTSTC / )
YEARS (21) - STORES INHERITED YEARS
                ( LOCAL - MATRIX GENERATOR'S GENLCP )
YRINT (20) - SCALE FACTOR FOR ALL TASKS IN PERIOD
                ( LOCAL - MATRIX GENERATOR'S GENLCP )
YT(10) - DIFFERENCES BETWEEN SOLUTION POINT AND LOWER BOUNDS
                ( LOCAL - MAIN PROGRAM'S NXBRN )
Z - PARAMETER USED TO PACK INDEX OF COEFFICIENT
                ( LOCAL - MAIN PROGRAM'S IO )
G9H8 8 7==!,977 H9!879IG9= 97=!9H
                (GLOBAL - MAIN PROGRAM'S COMMON / TOLS / )
ZS - PARAMETER USED TO PACK COEFFICIENTS
                ( LOCAL - MAIN PROGRAM'S IO )
```

REFERENCES FOR VOLUME I

1. J. C. Hetrick, "Mathematical Models in Capital Budgeting," Chapter 7. New Decision Making Tools for Managers; edited by E. C. Bursk and J. F. Chapman, (Cambridge, Harvard University Press, 1963) p. 186.

2. J. E. Falk and R. M. Soland, "An Algorithm for Separable Non-Convex Programming Problems," Management Science, Vol. 15, No. 9, May 1969.

3. E. M. L., Beale, "Advanced Algorithmic Features for General Mathematical Programming Systems," Integer and Nonlinear Programming, edited by J. Abadie, North-Holand Publishing Company, 1970.

REFERENCES FOR VOLUME II

4. R. New, "Optimal Planning Over Time — OPT," Journal of Systems Management, March 1972.

5. R. M. Soland, "An Algorithm For Separable Non-Convex Programming Problems II: Non-Convex Constraints," Management Science, Volume 17, No. 11, July 1971.