AD

AD 742215

REPORT NO. RG-TR-72-5

AN AUTOMATIC, CONTINUOUSLY VARIABLE GAIN CONTROLLER FOR THE LANCE DIRECTIONAL CONTROL ELECTRONICS

by
Pat H. McIngvale

February 1972

Approved for public release; distribution unlimited.

U.S. ARMY MISSILE COMMAND
Redstone Arsenal, Alabama

Reproduced by
NATIONAL TECHNICAL
INFORMATION SERVICE
Springfield, Va. 22151

DDC
RECEIVED
MAY 24 1972
B

Form 1473, 1 DEC 65 PREVIOUS EDITION IS OBSOLETE

DISPOSITION INSTRUCTIONS

Destroy this report when it is no longer needed. Do not return it to the originator.

DISCLAIMER

The findings in this report are not to be construed as an official Department of the Army position unless so designated by other authorized documents.

ACCESSION for
NTIS White Section
DDC Buff Section
UNANNOUNCED
JUSTIFICATION
BY
DISTRIBUTION/AVAILABILITY CODES
Dist. AVAIL. and/or SPECIAL
A

TRADE NAMES

Use of trade names or manufacturers in this report does not constitute an official indorsement or approval of the use of such commercial hardware or software.

UNCLASSIFIED
Security Classification

DOCUMENT CONTROL DATA - R & D

(Security classification of title, body of abstract and indexing annotation must be entered when the overall report is classified)

1. ORIGINATING ACTIVITY (Corporate author)
Guidance and Control Directorate
Directorate for Research, Development,
Engineering and Missile Systems Laboratory
U.S. Army Missile Command
Redstone Arsenal, Alabama 35809

2a. REPORT SECURITY CLASSIFICATION
Unclassified

2b. GROUP
NA

3. REPORT TITLE
AN AUTOMATIC, CONTINUOUSLY VARIABLE GAIN CONTROLLER FOR THE LANCE DIRECTIONAL CONTROL ELECTRONICS

4. DESCRIPTIVE NOTES (Type of report and inclusive dates)
Technical Report

5. AUTHOR(S) (First name, middle initial, last name)
Pat H. McIngvale

6. REPORT DATE
1 February 1972

7a. TOTAL NO. OF PAGE
41

7b. NO. OF REFS
2

8a. CONTRACT OR GRANT NO.

b. PROJECT NO. (DA) 1X222251D231
AMC Management Structure Code No.
c. 527E.12.12500

d.

9a. ORIGINATOR'S REPORT NUMBER(S)
RG-TR-72-5

9b. OTHER REPORT NO(S) (Any other numbers that may be assigned this report)
AD

10. DISTRIBUTION STATEMENT
Approved for public release; distribution unlimited.

11. SUPPLEMENTARY NOTES
None

12. SPONSORING MILITARY ACTIVITY
Same as No. 1

13. ABSTRACT
A desire to increase accuracy of the LANCE directional control system (in the presence of variable crosswinds) prompted an investigation into methods of applying a continuous time varying gain controller to the directional control electronics. A series of hybrid computer simulations by the contractor (LTV Aerospace Corporation) indicated that the best accuracy is obtained when the gain varies with time in the same manner as the missile static margin. A function generator was designed whose output voltage reproduced the time varying characteristic of nominal static margin. With this function generator as the driving source, three variable gain amplifiers were designed that utilized three different concepts. Breadboard models of these amplifiers were constructed and laboratory evaluations were performed. From the data produced by the laboratory evaluations, it was possible to choose the variable gain amplifier design that best met the requirements of the LANCE directional control system. A preliminary design of a dual-band function generator to allow for either a light or a heavy warhead was considered. A firm design of this is not possible until more simulations (using the heavy warhead) are performed. Preliminary consideration was given to the increased components required to implement the continuously variable gain controller and the problem of packaging it in the present directional control system. It appears feasible that the variable gain controller can be packaged in the required space using presently available technology.

DD FORM 1 NOV 65 1473 REPLACES DD FORM 1473, 1 JAN 64, WHICH IS OBSOLETE FOR ARMY USE.

UNCLASSIFIED
Security Classification

14. KEY WORDS	LINK A ROLE	LINK A WT	LINK B ROLE	LINK B WT	LINK C ROLE	LINK C WT
LANCE directional control system						
Time varying gain controller						
Electronic gain system						
Dual-band function generator						

1 February 1972 Report No. RG-TR-72-5

AN AUTOMATIC, CONTINUOUSLY VARIABLE GAIN CONTROLLER FOR THE LANCE DIRECTIONAL CONTROL ELECTRONICS

by
Pat H. McIngvale

DA Project No. 1X222251D231
AMC Management Structure Code No. 527E.12.12500

Approved for public release; distribution unlimited.

Guidance and Control Directorate
Directorate for Research, Development, Engineering
and Missile Systems Laboratory
U.S. Army Missile Command
Redstone Arsenal, Alabama 35809

ABSTRACT

A desire to increase accuracy of the LANCE directional control system (in the presence of variable crosswinds) prompted an investigation into methods of applying a continuous time varying gain controller to the directional control electronics. A series of hybrid computer simulations by the contractor (LTV Aerospace Corporation) indicated that the best accuracy is obtained when the gain varies with time in the same manner as the missile static margin. A function generator was designed whose output voltage reproduced the time varying characteristic of the nominal static margin. With this function generator as the driving source, three variable gain amplifiers were designed that utilized three different concepts. Breadboard models of these amplifiers were constructed and laboratory evaluations were performed. From the data produced by the laboratory evaluations, it was possible to choose the variable gain amplifier design that best met the requirements of the LANCE directional control system. A preliminary design of a dual-band function generator to allow for either a light or a heavy warhead was considered. A firm design of this is not possible until more simulations (using the heavy warhead) are performed. Preliminary consideration was given to the increased components required to implement the continuously variable gain controller and the problem of packaging it in the present directional control system. It appears feasible that the variable gain controller can be packaged in the required space using presently available technology.

CONTENTS

		Page
1.	Introduction	1
2.	Function Generator	2
3.	Multiplier Gain Control Concept	8
4.	FET Gain Controller	14
5.	Photocell-Lamp Gain Controller	16
6.	Selection of the Best Gain Control Concept	25
7.	Dual-Gain Capability	26
8.	Hardware Comparison Between Present and Proposed Gain Controllers	32
9.	Conclusions	32

1. Introduction

When designing an automatic control system for a guided missile, there are several conditions under which the control system gain must receive special consideration. For example, when a missile first leaves its launcher it is usually at a low velocity so that air vanes have low effectivity which lowers the overall control system gain. A similar condition exists when a missile with air vanes operates at high altitude where the less dense air causes the vane effectiveness to be reduced. In both cases the electronic gain must be increased to keep the control system gain at its desired level.

In the case of the LANCE directional control system, it is the presence of crosswinds (especially those of variable velocity or direction) that make a variable electronic gain desirable. If the directional control gain is at its optimum value, the missile will precisely weathercock into the wind to correct for any drift and will fly along the desired path. However, if the gain is too high the missile will maintain an insufficient crab angle and consequently will drift downwind. Conversely, the effect of a low gain will be too great a crab angle with the resulting upwind flight of the missile. It has been found that the optimum gain is a function of the missile static margin which changes continuously during the boost phase of a flight because of fuel depletion and velocity change. Because of this, a fixed gain can only be optimum for a very short increment of time. Likewise, a two-step gain such as used in the present LANCE directional control system is a poor compromise when the static margin varies as it does in the LANCE boost phase of flight. If the gain is to be adjusted to minimize the missile's tendencies to fly upwind or downwind, then it will be necessary to vary the gain with time in the same manner that the static margin varies. This report deals with the results of a study to investigate continuously time variable, automatic gain control techniques and their application to the LANCE directional control system.

In the past, when it was necessary to have a continuously time-varying gain in a missile control system, a rather bulky system consisting of a precision potentiometer, an electric motor, and a precision cam was used. This was the control attenuator timer of the Jupiter and early Pershing systems. Such an electromechanical system with its bulk, high-power requirement, and inherently unreliable nature has no application in a modern, lightweight, tactical missile. Therefore, a first requirement for a potential gain control system is that it be all electronic, preferably solid state, lightweight, and have a current requirement low enough that a major redesign of the LANCE power supply would not be required.

The first step in this study was the design of an electronic function generator to produce a voltage variable with time that closely approximates the nominal static margin. Three methods of varying the electronic system gain in response to the function generator voltage were explored. This exploration consisted of designing the variable gain circuits, building

breadboards, and performing laboratory evaluations. In addition, the basic function generator circuit was modified as required to interface with the gain control circuits. The best gain control system, from a technical standpoint, was chosen after comparing the performance of all three. A preliminary design of a two-band function generator is given and a comparison of the hardware required to implement the variable gain system and the present two-step gain system is made.

2. Function Generator

For a variable gain system to be of any value, it is necessary that it be driven by the proper function. Therefore the function generator circuit is considered first. The desired function is the missile nominal static margin shown in Figure 1. This curve is the result of a series of hybrid computer studies[1] on the accuracy of the directional control system.

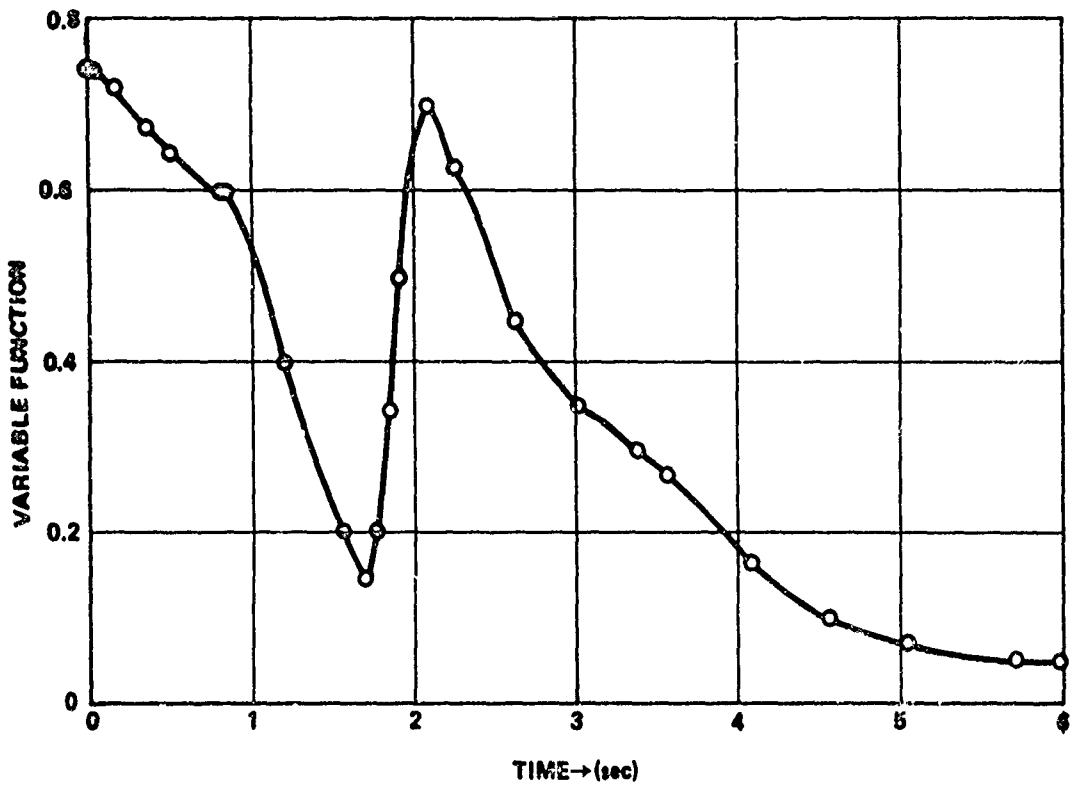

Figure 1. Nominal Static Margin Function

[1] Directional Control System Slope Studies Report, Missiles and Space Division – Michigan, LTV Aerospace Corporation, Report No. 7-57020/1R-34, 24 June 1971.

After some consideration it was decided to use a diode function generator, similar to those used in analog computers except that it would be greatly simplified. This circuit uses an integrator to provide a positive-going voltage ramp in response to a step voltage which is switched in when the function is started (t = 0.0) and a unity gain operational amplifier to provide a negative-going ramp. These ramps provide the time base for the function. The breakpoints on the function are provided by diodes which are biased by suitable resistors between the ramp and the supply voltage with polarity being determined by whether a positive or negative slope is required. For example, consider the circuit of Figure 2.

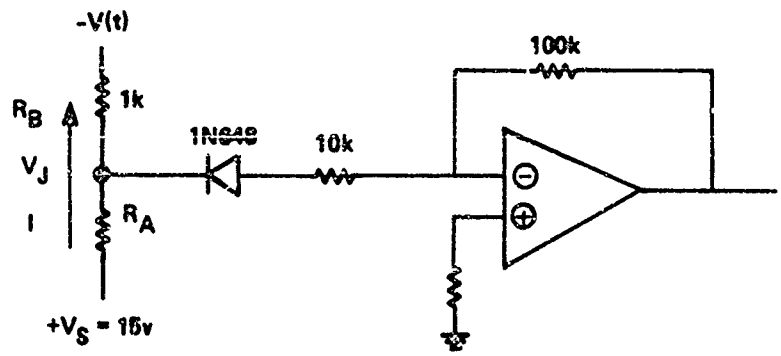

Figure 2. Example of One Segment of a Diode Function Generator

If it were determined (from the d sired curve) that a positive breakpoint was needed at t = 1.6 seconds and the design of the time-base generator was such that at t = 1.6 the ramp had a value V(t) = ±2.13 volts, the appropriate biasing resistors could be calculated as follows. The diode (1N 648) begins conduction when there is approximately 0.5 volt from anode to cathode. In the circuit of Figure 2, this means that the junction of R_A and R_B must be at a voltage of V_J = -0.5 volt at the breakpoint (t = 1.6). Resistor R_B was arbitrarily chosen as 1 kilohm for all breakpoints. Then the current (at t = 1.6) is:

$$I = \frac{[+15 - (-2.13)]\text{volts}}{R_A + 1 \text{ kilohm}} \qquad (1)$$

and the junction voltage is

$$V_J = +15v - I(R_A) \qquad (2)$$

It has been determined that $V_J = -0.5v$ for the diode to begin conduction so that

$$-0.5v = +15v - I(R_A) \quad .$$

Equation (1) is substituted for I in this equation to yield:

$$R_A = 9.51 \text{ kilohm} \quad .$$

A more general equation results from writing Equation (1) as

$$I = \frac{+15v - [-V(t)]}{R_A + 1 \text{ kilohm}} \quad \text{(for positive slopes)} \quad (1a)$$

and

$$I = \frac{V(t) - (-15v)}{R_A + 1 \text{ kilohm}} \quad \text{(for negative slopes)}. \quad (1b)$$

Writing Equation (2) in the same form gives:

$$-0.5v = +15v - I\,R_A \quad \text{(for positive slopes)} \quad (2a)$$

$$+0.5\ v = V(t) - I(1 \text{ kilohm}) \quad \text{(for negative slopes)} \ . \quad (2b)$$

Substituting terms of Equation (1a) into Equation (2a) and terms of Equation (1b) into (2b) yields:

$$R_A = \frac{15.5 \text{ kilohm}}{V(t) - 0.5} \quad (3)$$

where the absolute value of V(t) is used. By using this method, the various breakpoints can be set. When building the circuit it will probably be necessary to adjust these values slightly to compensate for the knee on the diode conduction curve. Once the diode begins conducting, the amplifier will have an output voltage that increases with increasing time or decreases with increasing time, depending on whether the diode and its biasing voltages are arranged for positive or negative slopes. The steepness of the slope can be adjusted somewhat by varying

the gain (closed-loop) of the amplifier. If a steeper slope is desired, two breakpoints can be made to occur simultaneously.

Using these principles the first function generator circuit was designed as shown in Figure 3. In this circuit R_{IC} was used to set the initial condition for the function (7.5 volts at t = 0). Each amplifier had only one or two breakpoints associated with it and the zener diodes were used to clamp segments of the curve when their function interfered with the desired shape of the curve. This was done to avoid adding extra segments to cancel the unwanted segments. It will be noted that the output voltage (Figure 4) is a factor of 10 greater than the desired function. This was done because it is easier to work with voltages of the larger magnitude and it was reasoned that the higher voltage could be more versatile in driving the gain-change circuits. This will be seen in the discussion on the gain-change circuits.

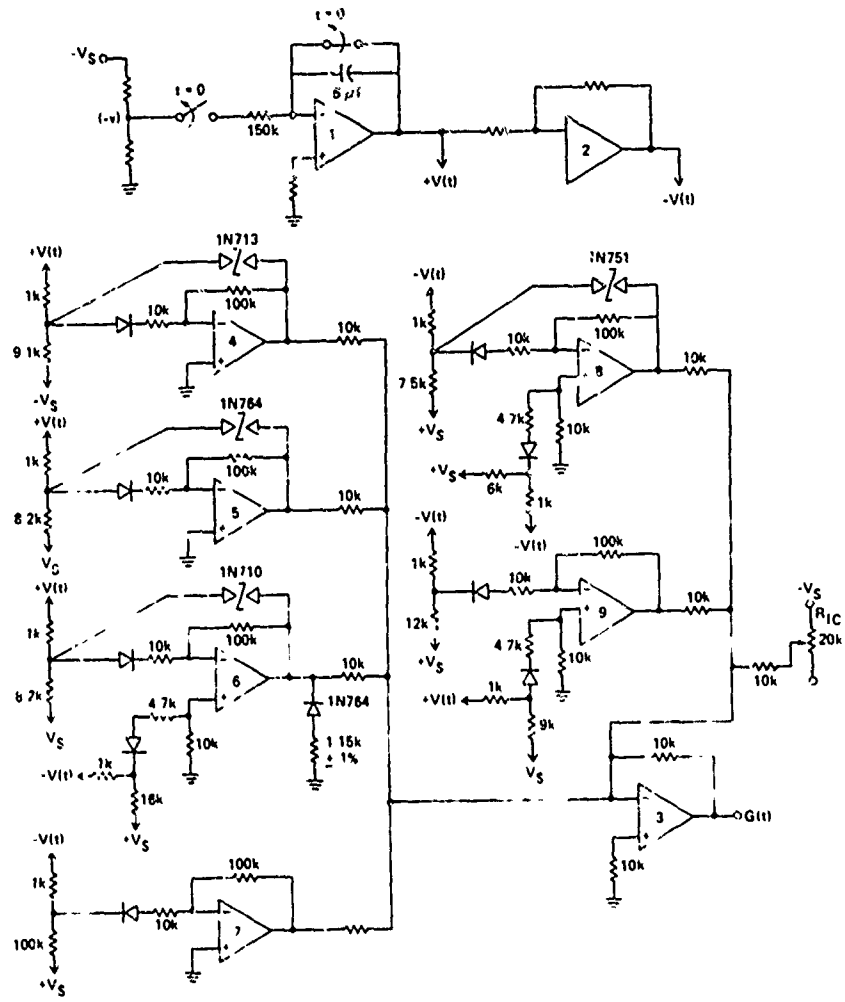

Figure 3. Function Generator Circuit (First Design)

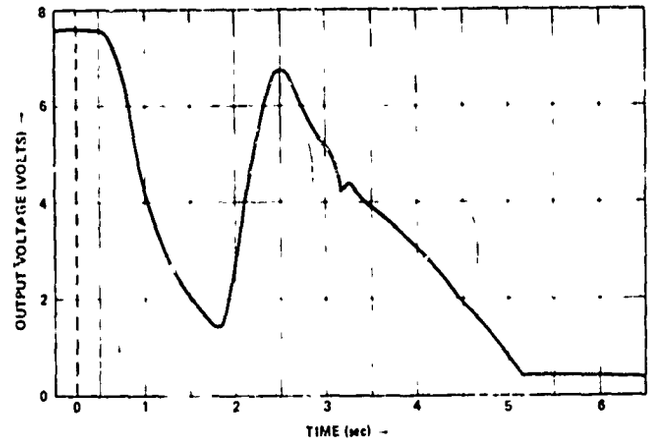

Figure 4. Output of First Function Generator Design

Although the function (Figure 4) is a reasonable approximation of the desired curve, this design was found to be unsatisfactory. The current requirements were too high, the nine operational amplifiers made it too expensive and bulky, and the function was not close enough to the desired curve. Therefore, the circuit was redesigned to produce the circuit shown in Figure 5. This circuit is actually the end point of a series of design iterations in which each design was simpler and produced an improved function from the preceding design.

This final circuit uses an increased slope ramp from the time base generator to allow the breakpoints to be spaced more accurately (because of a greater ΔV between breakpoints). By having one amplifier serve all the segments, it actually is easier to control the function and the zener diodes could be eliminated. The slopes are adjusted by varying the gain for that segment through the input resistor selection. All of the function generators had an idiosyncracy of driving to a large negative value at some time beyond 6 seconds. This is not a problem because the directional control system is turned off at that time; but to eliminate its occurrence, the zener feedback was placed around the integrator so that the timing ramp stops just beyond 6 seconds and the function stays constant thereafter. A relay is used to start the timing ramp (K1 and K2). The relay is arranged so that current through the relay coil on the launcher holds the circuit in the reset condition and removal of the current (at missile first motion) starts the function generator. The output of this circuit is shown on Figure 6 along with the desired curve for comparison. It is seen that the function is reproduced quite well.

This function generator circuit meets the requirements set forth earlier. It is all solid state electronic, the current drain is reasonably low, and it is a relatively simple circuit for the function that it performs. The operational amplifiers are three 741's in a single hybrid microcircuit. This package, by Mini-Systems Inc., has been quite

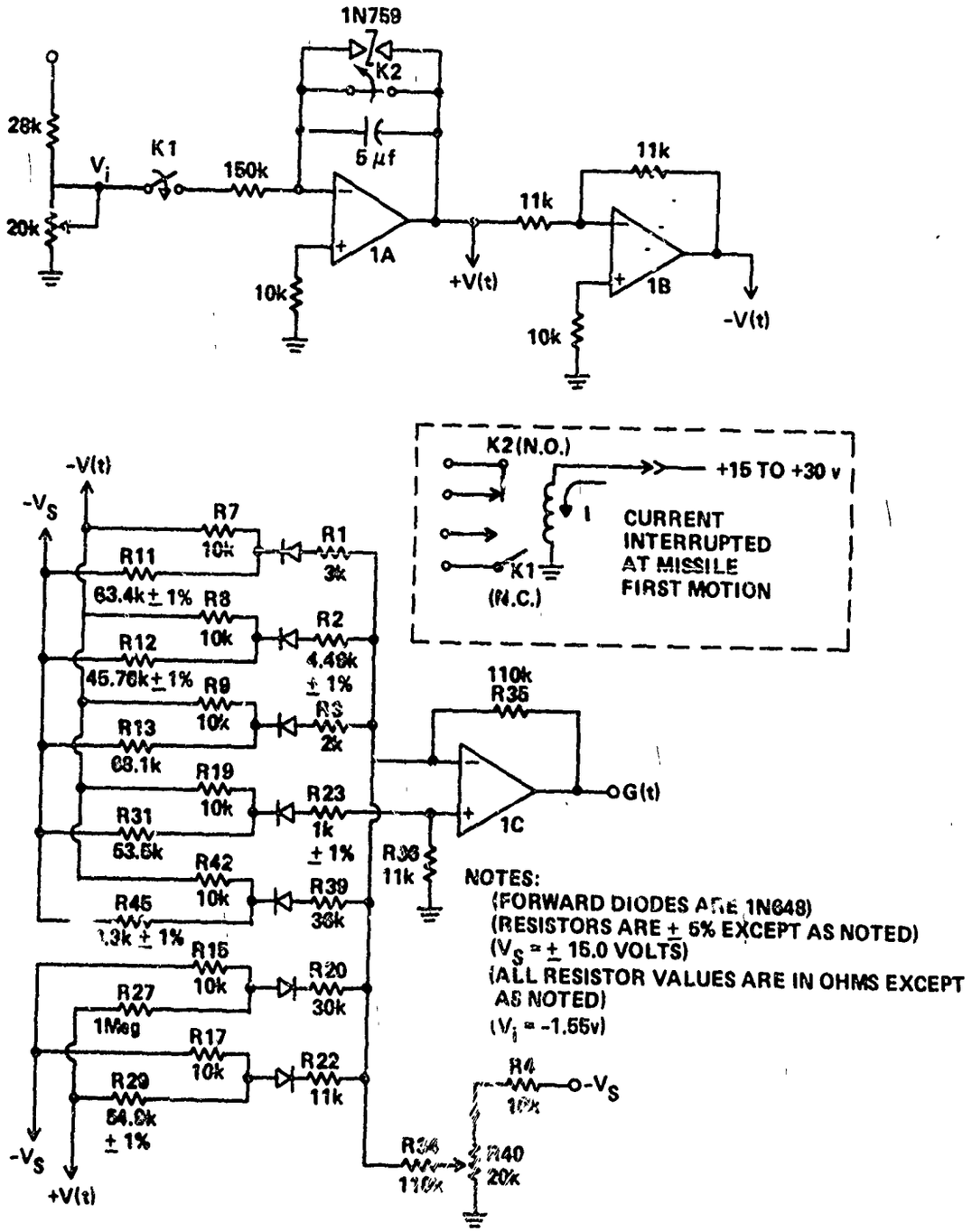

Figure 5. Function Generator Schematic (Final Design)

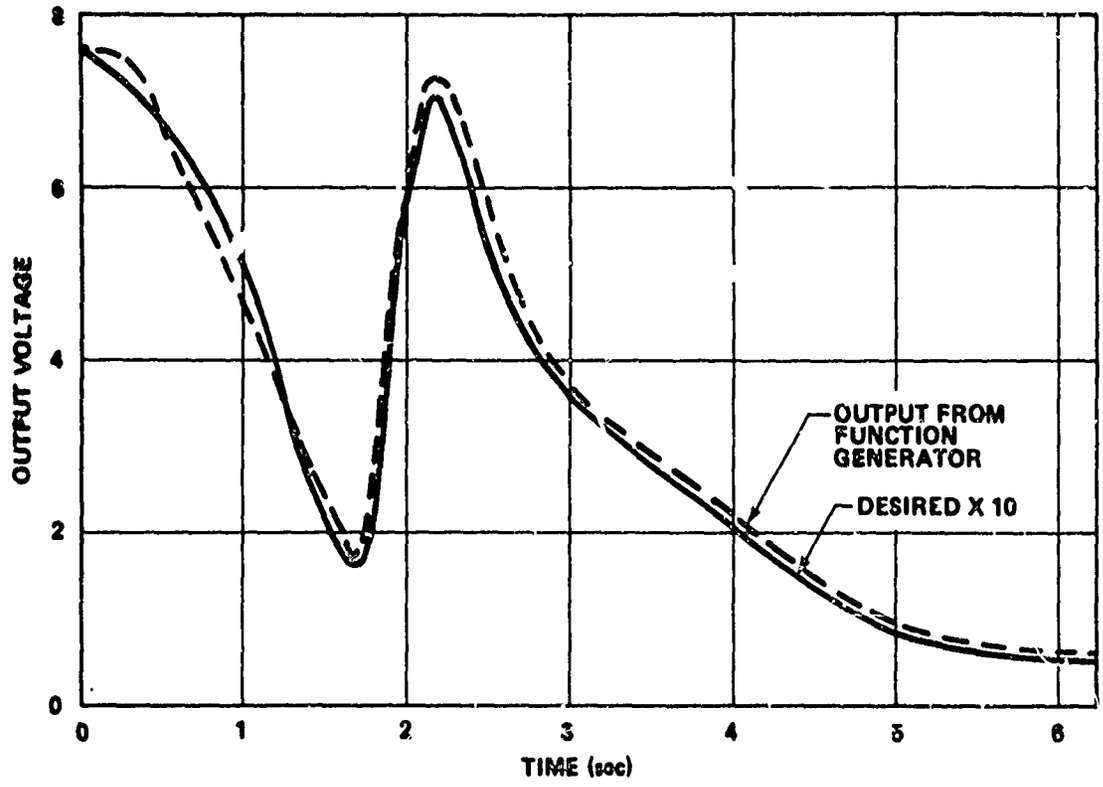

Figure 6. Desired Function and Ouput of Final Function Generator Design

satisfactory in the breadboard circuit and, if used in a flight configured circuit, would reduce the bulk of the package. The relay(s) could be subminiature type(s) and the resistors could all be 1/8 watt so that packaging this circuit should cause no real problem.

3. Multiplier Gain Control Concept

The first gain control concept explored made use of the principle of electronic multiplication. Electronic multipliers come in various shapes and sizes but all function basically as indicated in Figure 7.

Figure 7. Functional Diagram of an Electronic Multiplier

The factor K is usually 0.1 or 0.01 depending on the circuit in question. It became obvious that if X were the control signal and Y were the controlling voltage (output from the function generator) then the output Z would be controlled by both inputs (X and Y). Furthermore, the gain (of the signal) is dependent upon the Y input. If X is the signal input and Z is the signal output, the gain through the multiplier is:

$$A = \frac{Z}{X} = \frac{XYK}{X} = YK \ . \tag{4}$$

Thus the gain is controlled by a fixed multiplier (K) and the Y input which will become G(t) in the overall system. Assume that K = 0.1 and recalling that the function generator discussed earlier had an output of G(t) = 10 (static margin); then, the gain through the multiplier is A = G(t) (0.1) = static margin, which is the desired function. It is then necessary to insert the multiplier in the signal path to achieve the variable gain circuit.

The choice of where to insert the multiplier in the LANCE directional control electronics (DCE) becomes a simple matter by referring to the block diagram (Figure 8) of this system.

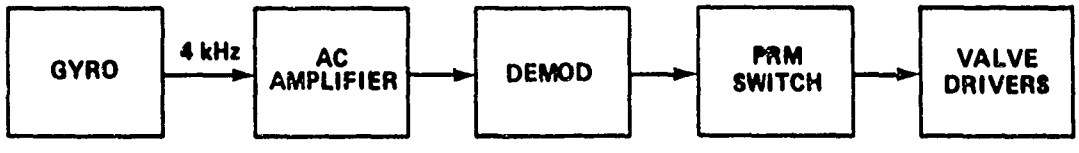

Figure 8. Block Diagram of One Control Channel of the Directional Control Electronics

The DCE demodulator is a diode bridge circuit so that the only linear gain element in the electronics is the AC amplifier. This is the reason the step gain changing is performed here also. An additional factor that makes the AC amplifier a convenient location for gain changing is the relatively low signal level in this stage. The basic LANCE AC amplifier using the two-step gain system is shown in Figure 9. In this amplifier the first stage (Q1) provides the proper load impedance to the gyro while the second stage (Q2) provides the gain. The gain of Q2 is determined by the unbypassed emitter resistance. Gain 1 is the high gain and either gain 2 or gain 3 provide the low gain depending on the mission. In the present configuration only two out of the three gains are usable.

From Figure 9 it is obvious that the multiplier can be inserted between Q1 and Q2 and the circuits of Q3, Q4, and Q5 can be replaced with a single resistor. The result is the gain controllable AC amplifier shown in Figure 10. The multiplier chosen for this circuit was the

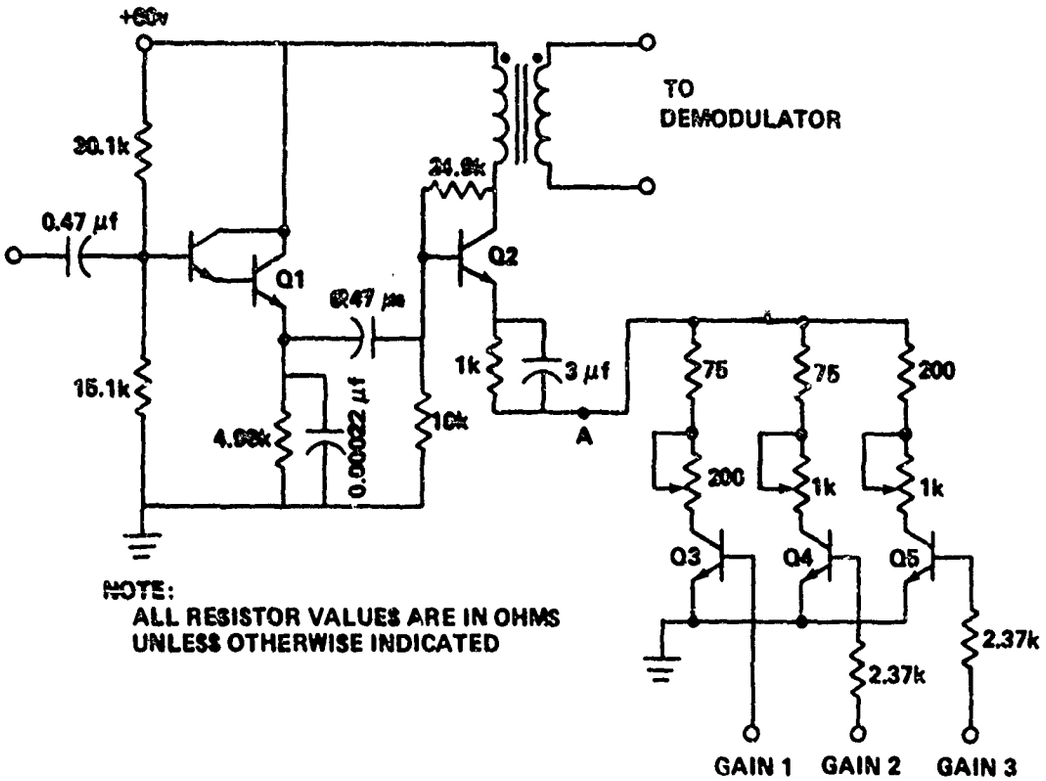

Figure 9. Present AC Amplifier

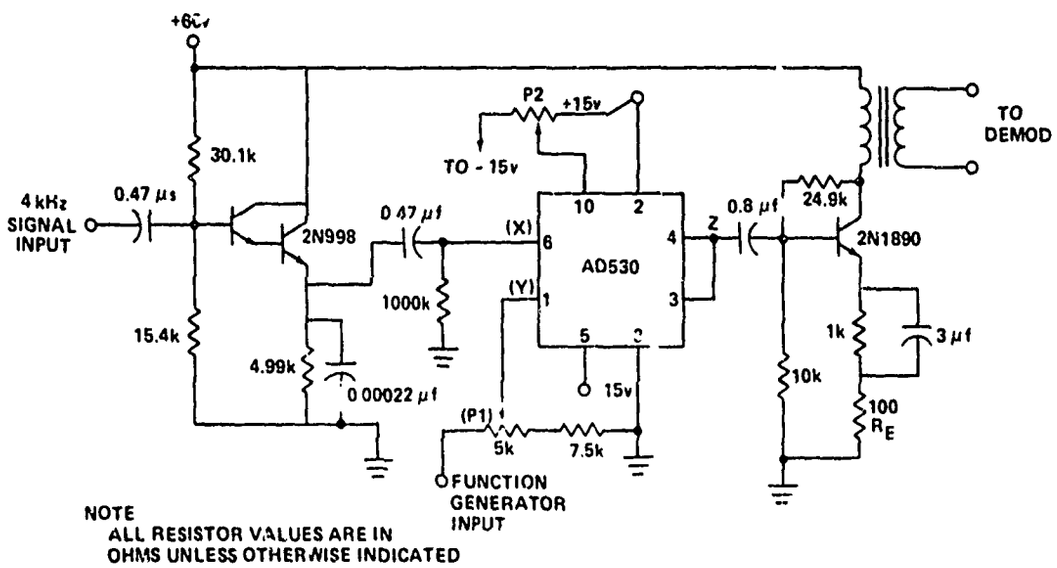

Figure 10. Gain Controllable AC Amplifier Using Electronic Multiplication

Model AD530 by Analog Devices. This is a monolithic integrated circuit device contained in a TO-100 package. The K associated with the output product (Z = XYK) is 0.1, which validates the earlier assumption. The output stage emitter resistor (R_E) was set at 100 ohms to assure adequate gain of this stage. The potentiometer (P1) is to allow trimming of the overall circuit gain.

The preliminary accuracy studies had indicated that a gain of

$$A_S = 17 \text{ (Static Margin)} \tag{5}$$

was the desired value. This means that the maximum value needs to be:

$$A_S = (17)(0.75) = 12.75 \quad .$$

This was set up on the breadboard circuit by putting in a 4 kHz signal to the input (of the same magnitude as presently used in checking out the DCE) and adjusting P1 to give the proper output with a voltage of 7.5 volts on the control input (Y) of the multiplier. Then using a manually variable DC voltage as the control input, the gain as a function of control voltage was measured. This was performed on two separate AC amplifiers and the results plotted on Figure 11. Even though no effort was made to match the two circuits (5-percent resistors were used), it can be seen that the two curves practically coincide. One possible problem that becomes obvious is that the gain does not go to zero when the control voltage is zero. The original circuits did not contain trimming networks even though the multiplier has trimming inputs for X_o, Y_o, and Z_o. A 20-kilohm trimpot (P2) was added to the Y_o input (Figure 10) to null this offset. The nulling procedure consists of setting the Y input (control voltage) to zero and nulling the output with P2 when there is an input to X. The gain versus control voltage of the trimmed amplifier is the third curve of Figure 11. It was not necessary to use the X_o and Z_o nulling inputs since the output goes to zero when X goes to zero regardless of the control voltage. If the small error at the lower control voltages can be tolerated it would be more economical to omit the two trimpots (one per amplifier) and the resultant nulling procedure. If greater accuracy is desired, it can be obtained by using the nulling networks.

The two controllable gain AC amplifiers were driven by the function generator in laboratory tests and were found able to perform exactly as desired. This gain control system could be installed in the DCE as shown in the block diagram of Figure 12.

The final item for consideration is the gain in the memory circuit. This circuit is for the purpose of nulling out any DC offsets in the DCE.

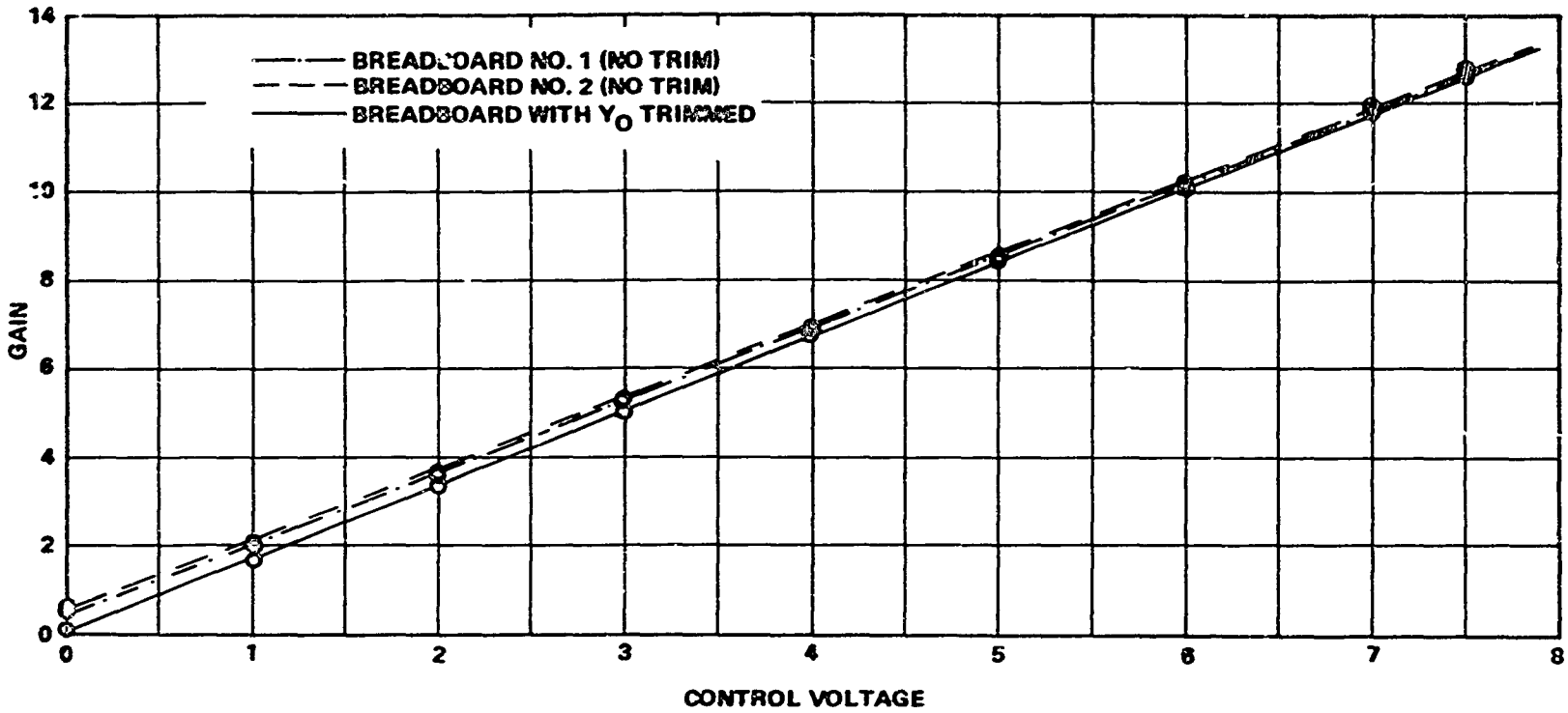

Figure 11. Gain as a Function of Control Voltage in the Electronic Multiplier Gain Controller

The major offset contribution is from the gyros but the nulling circuit will null out any offset voltage through the pulse ratio modulation (PRM) switch. Figure 13 shows the memory as it exists in the present LANCE.

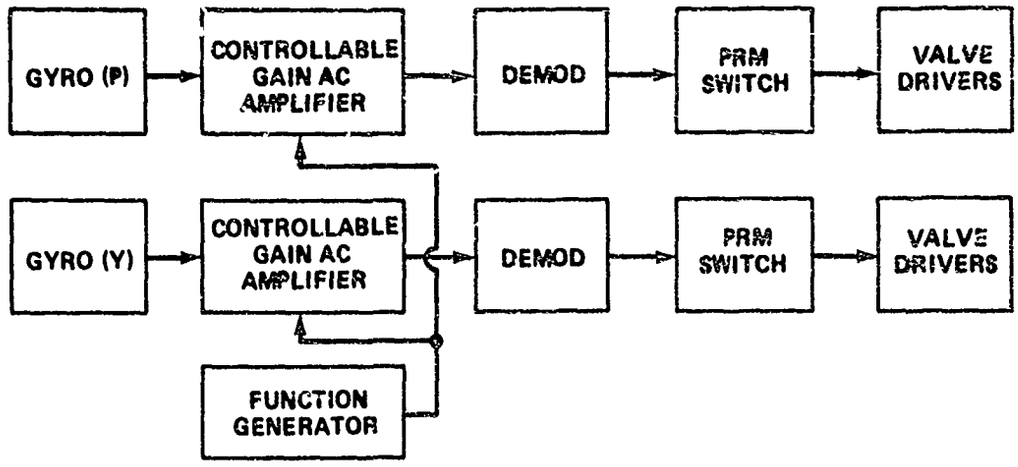

Figure 12. Block Diagram Showing the Addition of a Variable Gain System to the Directional Control Electronics

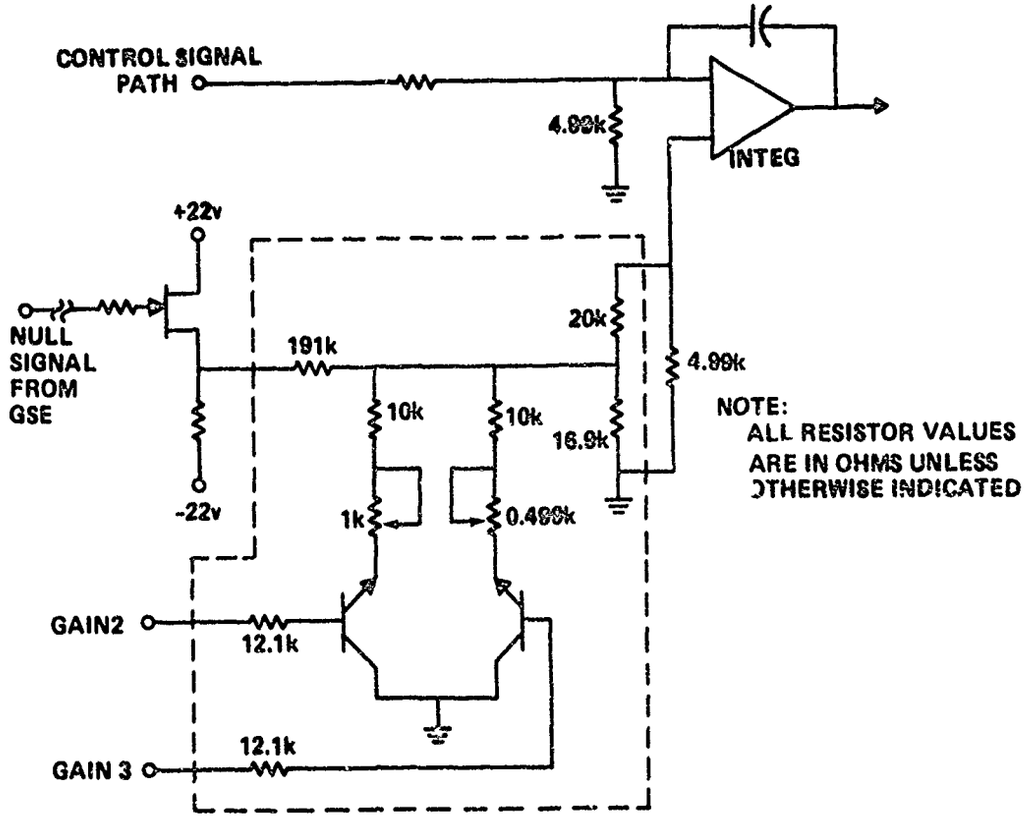

Figure 13. Gain Change Section of Memory Circuit (Step Gain Change)

Any offset at the output of the PRM switch is amplified and inverted in the GSE and stored on capacitor C5. The field effect transistor (FET) provides a very high impedance discharge path for C5 and the nulling voltage is divided across R4 and R10 to give the proper input to the integrator to null the output of the PRM switch. This is the gain 1 condition. When gain 2 or 3 is switched in, a lower resistance is paralleled with R10 to effectively lower the gain of the memory circuit by lowering the input voltage to the integrator. This circuit would be modified as shown in Figure 14 to accommodate the continuously variable-gain system. This circuit was not breadboarded and tested but it would obviously work in the same manner as the gain controller in the signal flow path.

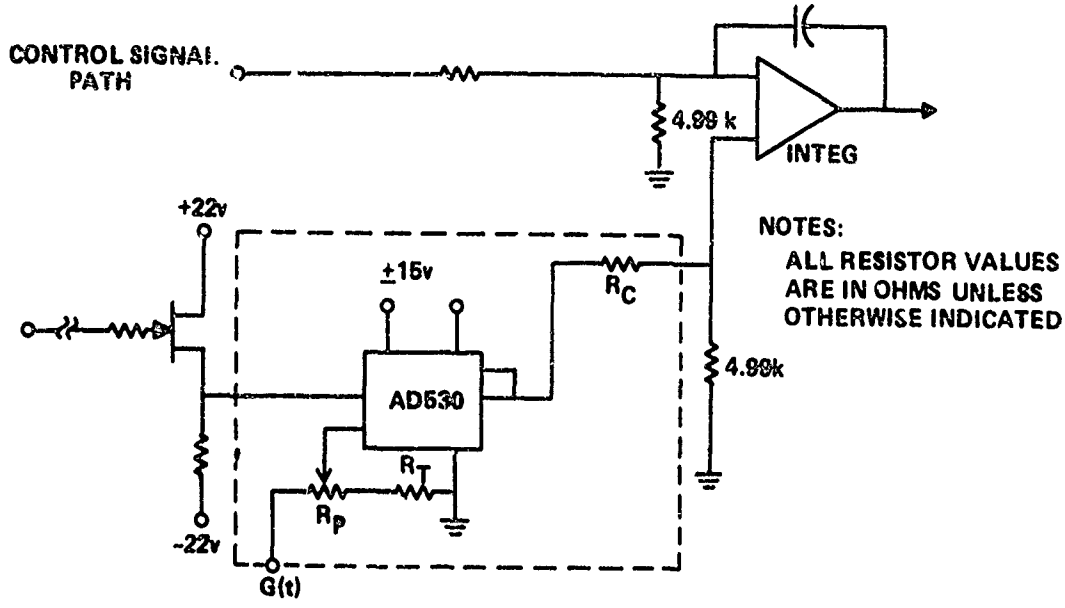

Figure 14. Gain Control Section of Memory Circuit (Continuously Variable Gain Controller)

4. FET Gain Controller

The second gain control approach investigated uses a FET as the variable gain element. It was suggested that when the draingate voltage (of an FET) is less than the channel pinch-off voltage, the device is useful as a voltage controlled resistor.[2] In this region, the incremental drain-source resistance (R_{dS}) is controlled by the voltage

---

[2] "FETS as Voltaged Controlled Resistors," Siliconix Incorporated Application Tip, 15 September 1966, Revised.

from gate source. It was reasoned that the AC amplifier (Figure 9) could be modified by substituting the FET (operated in the proper region) for the gain control switches and resistors in the collector circuit of Q2. Then, as the unbypassed emitter resistor (R_{dS}) was varied as a function of the control voltage, the gain of the Q2 amplifier stage would vary. Varying the Q2 emitter resistor (in discrete steps) is the manner in which the step gain control system operates.

The circuit of Figure 9 was modified by removing Q3, Q4, Q5, and their associated resistors and putting a 2N3823 FET between point A and ground. The gain was measured through the amplifier as the gate voltage of the FET was varied. These data are shown on Figure 15. The gain versus control voltage curves were run with the drain and the source grounded. As the curves of Figure 15 show, the best linearity is gained with the source grounded. Also, from Figure 15 it is noted that the control voltage variation over the entire linear range is small and that positive and negative control voltages are required.

The final gain controlled amplifier design using this concept is shown in Figure 16. The voltage divider (R1 and R2) was added to make the circuit respond to the magnitude of control voltage which it receives from the function generator. The resistor (R_E) was added to give control of the maximum gain through the amplifier. This was necessary because the minimum resistance of the FET (in the linear region) is too large for the amplifier to have the necessary maximum gain. In the configuration of Figure 16, the effective emitter resistance is the parallel combination of R_E and R_{ds} of the FET.

Curves of gain versus control voltage for two values of R_E are shown in Figure 17. The function generator output must be modified as shown in Figure 18. This modification is accomplished by adjusting R40 of Figure 5. This sets the starting point of the function of 1.75 instead of 7.5 as in the original. No other modifications are required. Laboratory functional tests using the function generator to drive the variable gain amplifier were successfully carried out. The main drawback to this method of controlling the gain can be seen from Figure 17. From this curve it is noted that a total gain variation of only approximately 2:1 can be realized with this circuit. The nonlinearity of the curve could probably be overlooked but in the LANCE DCE a gain variation of greater than 12:1 is required.

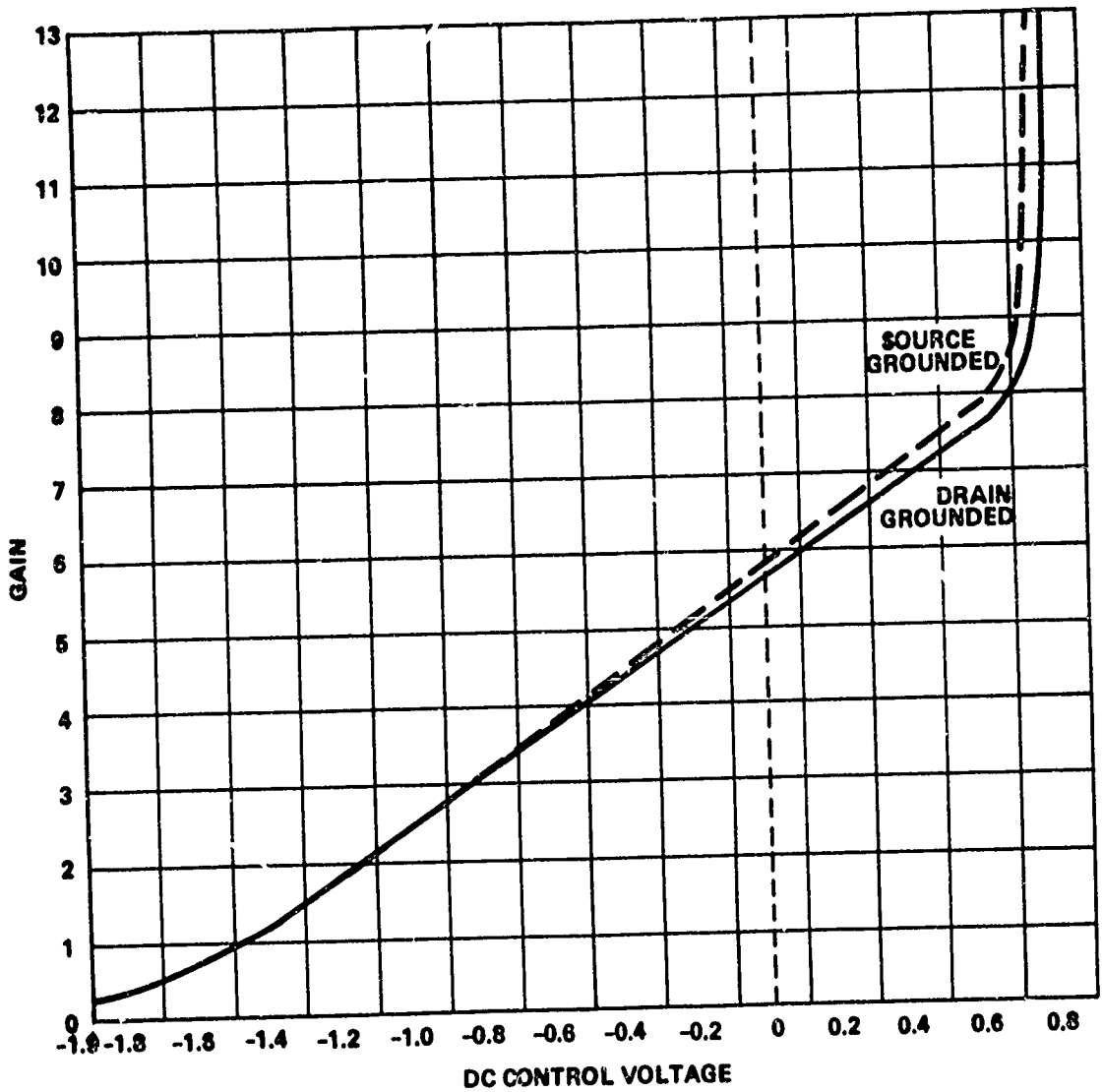

Figure 15. Amplifier Gain Versus Control Voltage (FET)

5. Photocell-Lamp Gain Controller

Another device whose resistance can be smoothly varied in response to an outside stimulus is the photoconductive cell. These cells, made of cadmium sulphide or cadmium selenide, are low in cost and can be designed to have light-to-dark resistance ratios that vary by 100:1 up to 10,000:1. Although the photocells can basically be thought of as resistors that vary as a function of the light impinging them, there are operating phenomena associated with these devices which must be considered. The most important in this application are nonlinearity, speed of response, and light history effect or the dependence of the instantaneous conductance, at a given light level, on the cell's previous

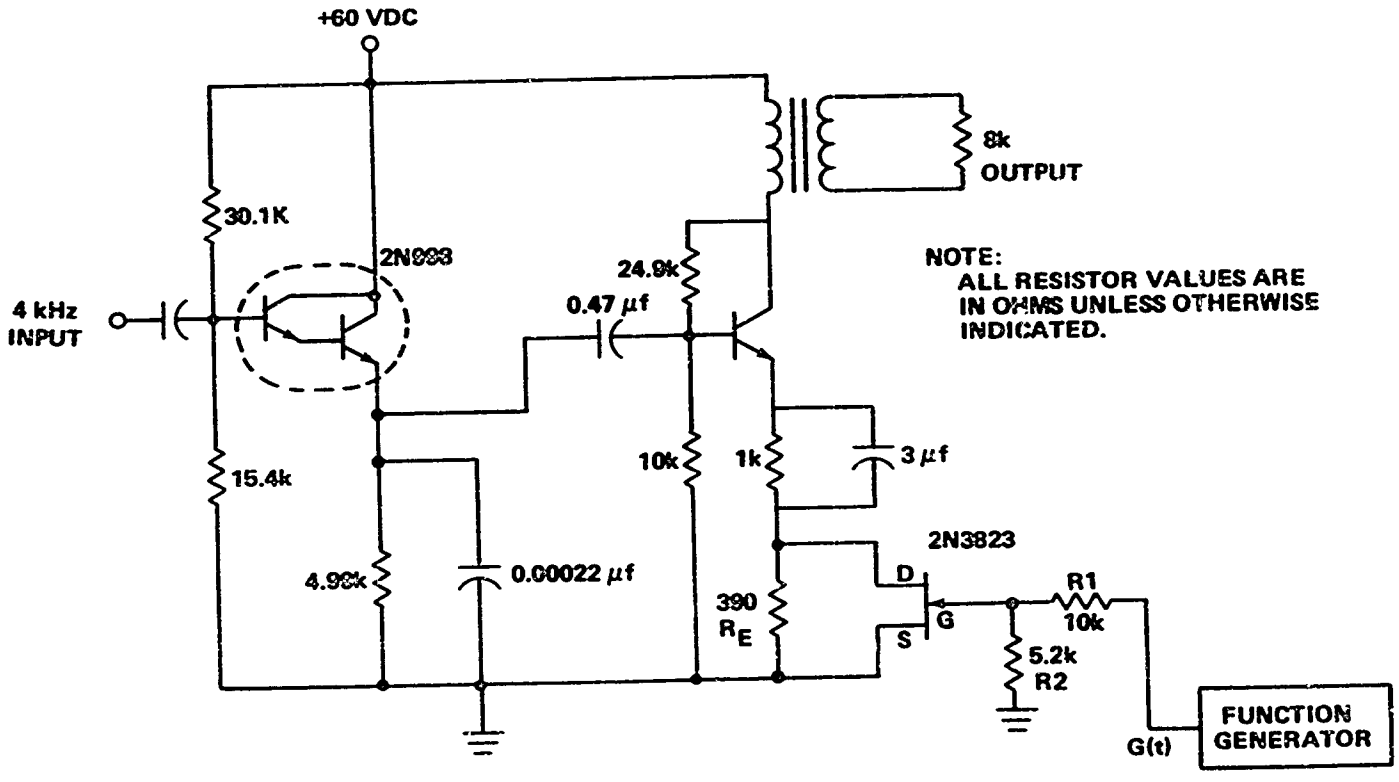

Figure 16. Field Effect Transistor (Variable Resistance) Gain Control Amplifier

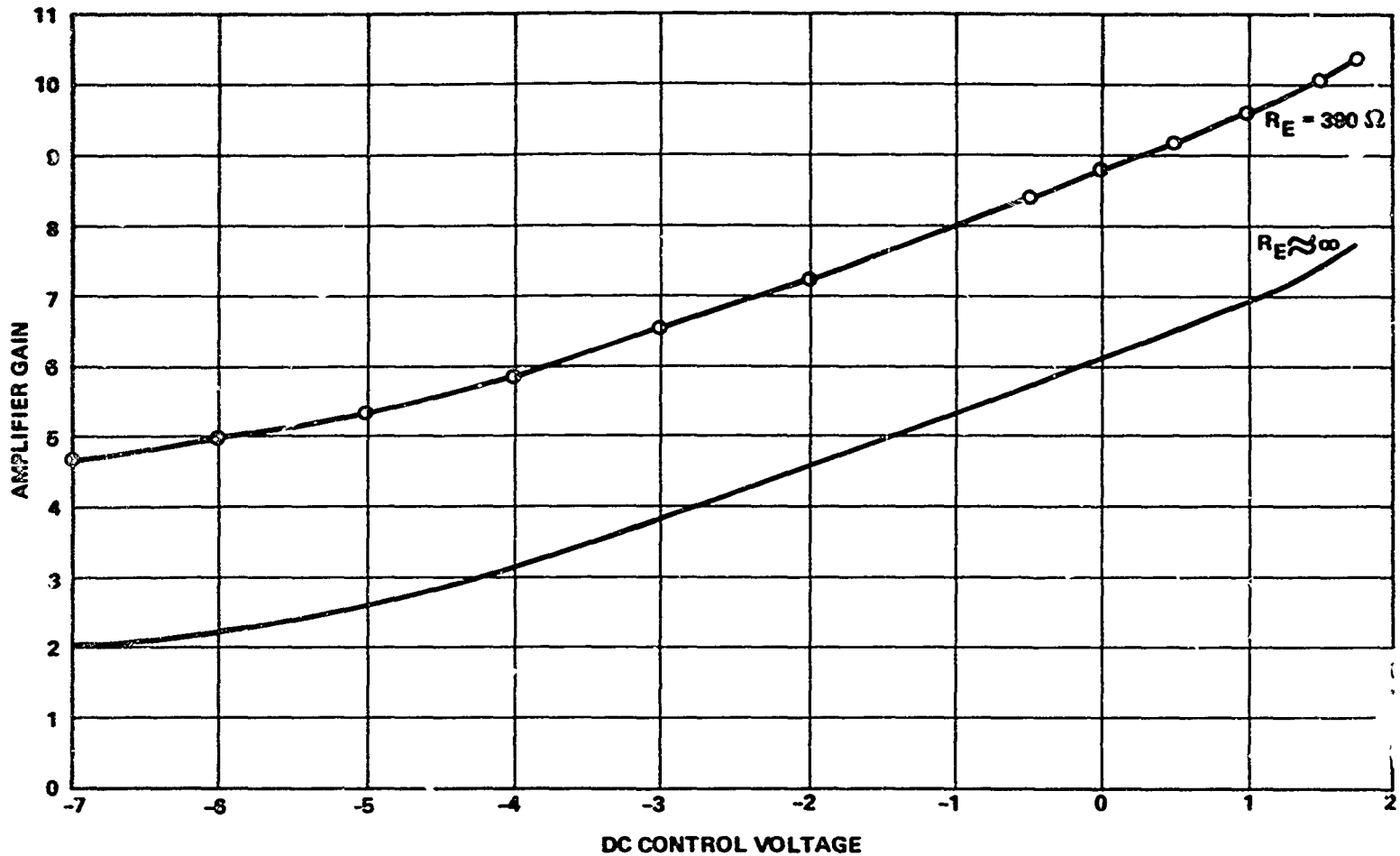

Figure 17. Gain Versus Control Voltage in the FET Gain Control Circuit

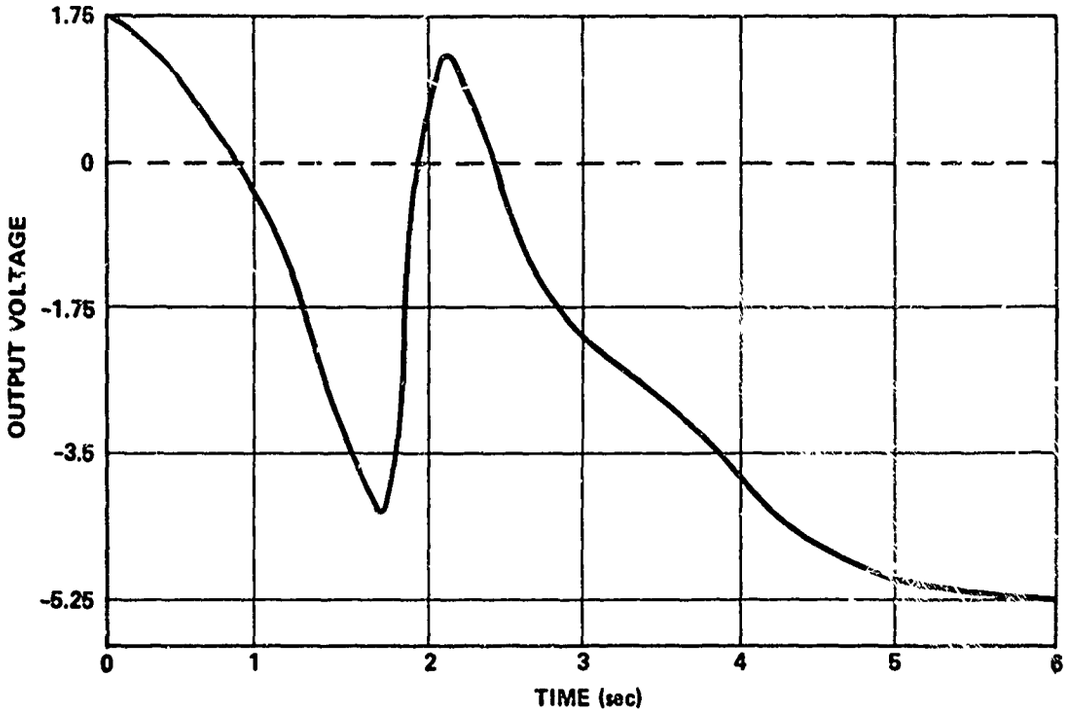

Figure 18. Function Generator Output for Use with the FET Variable Gain Circuit

exposure to light and the duration of this exposure. To determine how these phenomena would affect the use of the photocell in a variable gain amplifier, the experimental circuit of Figure 19 was built.

This circuit (Figure 19) is a modification of the basic LANCE AC amplifier with the variable resistor (photocell) being used in the same manner that the FET was used in the previous section. In addition, a lamp and driving circuit was designed. It was not possible to obtain an optimum lamp/photocell combination (matched according to spectral output/response) because readily available hardware had to be utilized. It was thought that the design principles could be satisfactorily proven without undue concern of such things as matching the lamp to the photocell. Therefore, a Clairex CL504L photocell and a GE313 incadescent lamp were used in the experimental circuit. A variable resistor R_T was put in series with the photocell and a series of gain versus control voltage curves were run with different values of R_T as shown in Figure 20. These curves show that the gain can be varied over a wide range in response to the control voltage. Figure 20 also points out the nonlinearity of the photocell's resistance. It can be seen, however, that as the gain versus control voltage slope is made steeper the linear section of the curve is extended. A first attempt at linearizing the gain versus control voltage response was to take the linear

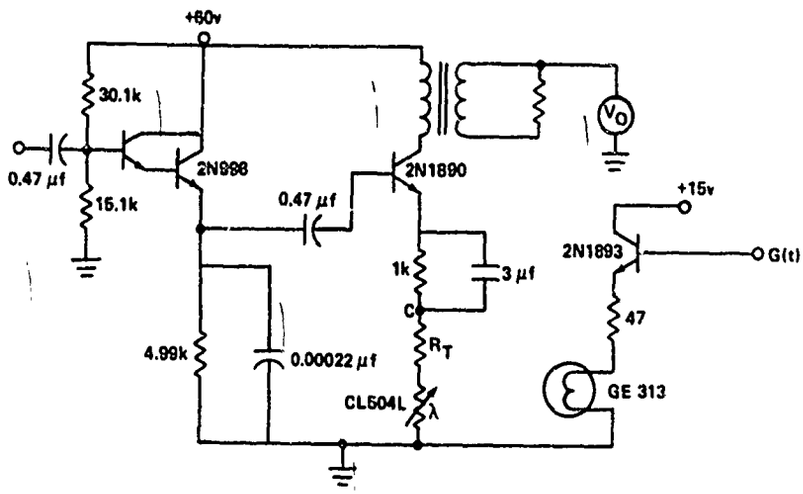

Figure 19. First Design of Photocell-Lamp Variable Gain Amplifier

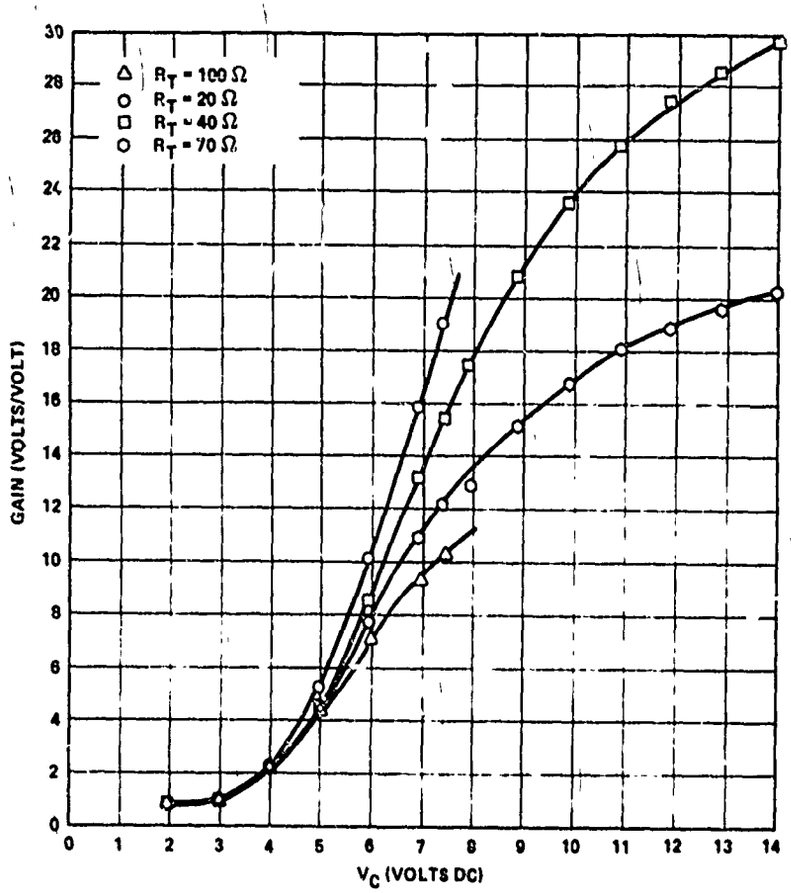

Figure 20. Gain Versus Control Voltage in the Photocell-Lamp Gain Controller (First Design)

section of the R_T equal 40-ohm curve for the operating point and reducing the gain through the total amplifier by attenuating the input to the second stage. This was incorporated into the second photocell-lamp design shown in Figure 21. A gain versus control voltage curve was run on this circuit and is shown in Figure 22. The curve still displays

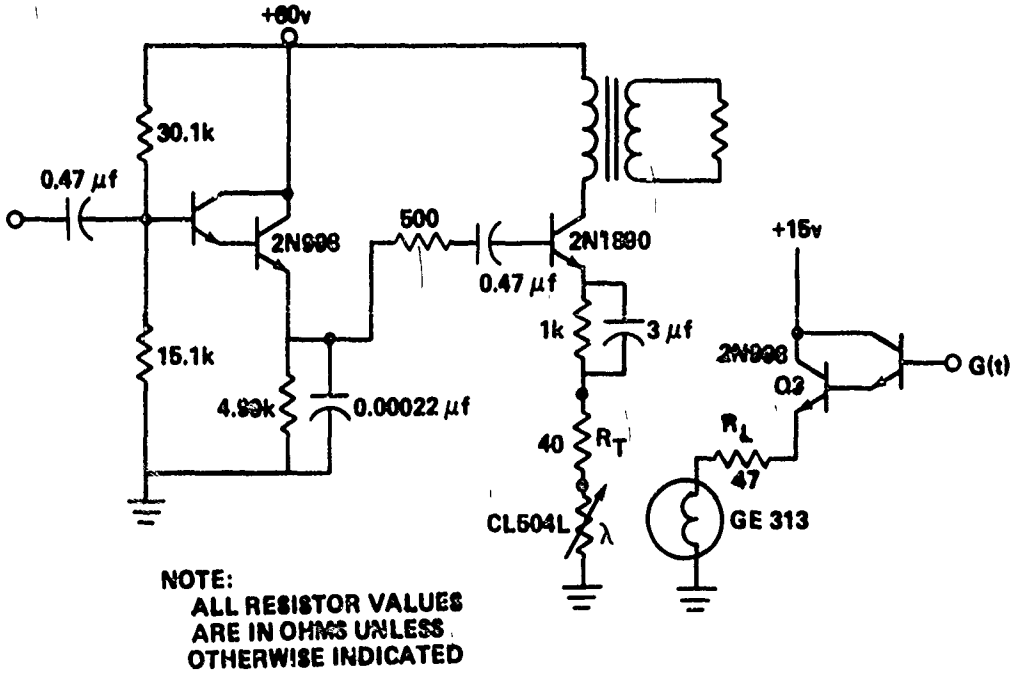

Figure 21. Second Design of the Photocell-Lamp Variable Gain Amplifier

some nonlinearity but with a little more adjustment (increasing the control voltage range a little and increasing the attenuation resistor) would probably be satisfactory. This would require modification of the function generator to make it operate over the voltage range required (ΔV = 1.5 volts as opposed to the original ΔV = 7 volts) and to start at 8.4 volts rather than 7.5 volts. The new function would be as shown in Figure 23. It would be relatively easy to modify the function generator (Figure 5) to give this output. The feedback resistor (R35) would have to be lowered in proportion to the decrease in ΔV(i.e., the new $R35 = \frac{5.1\ v}{7.0\ v}$ (110 k) = 80 k). The starting voltage is easily adjusted by the potentiometer R40. The breakpoints remain the same but some adjustment of the input resistors (R1, R2, R3, R23, R39, R20, R22) may be required to keep the slopes at the proper values.

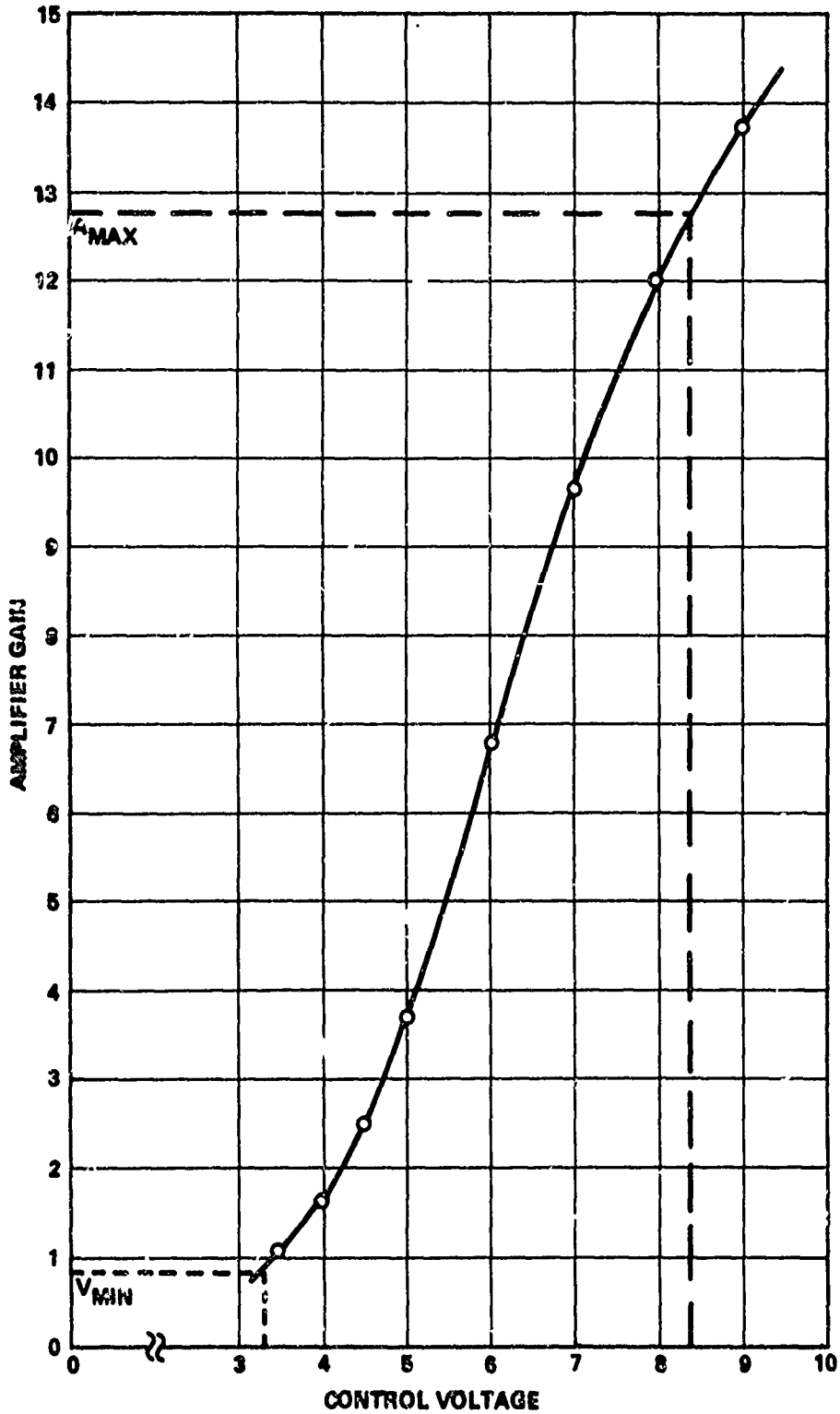

Figure 22. Gain Versus Control Voltage in the Photocell-Lamp Gain Controller (Second Design)

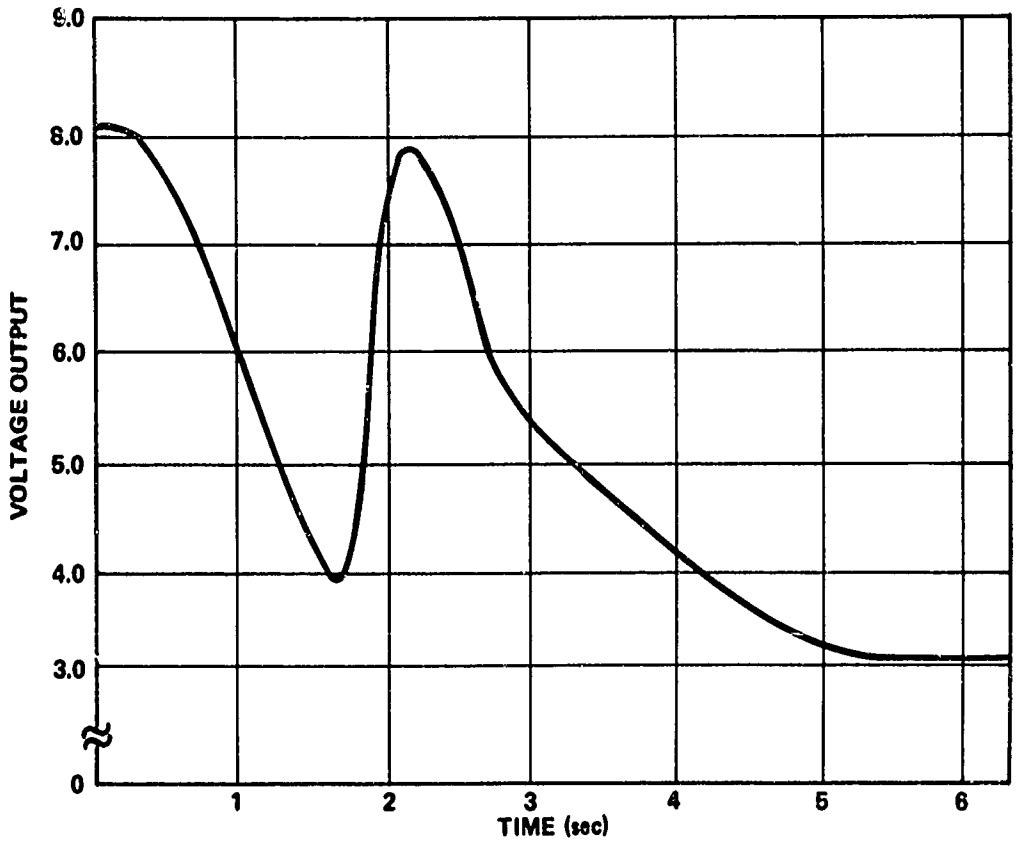

Figure 23. Function Generator Output for Use with the Photocell-Lamp Gain Controller

In considering the speed response of the circuit, the gain change section of Figure 21 (R_T, photocell, lamp, R_L, and Q3) was used separately. The 15-volt supply was applied to the top of R_T and the output was measured at the junction of R_T and the photocell. Thus the voltage across the photocell would indicate how its resistance was changing which is an indication of how the gain of the amplifier will vary. Experiments were performed by putting a varying control voltage in and recording (on an oscilloscope camera) the response of the voltage across the photocell. The results of this experiment are shown in the photographs of Figure 24 for two different control voltage bands. The function generator circuit was not available for this experiment so the control voltage was manually varied. As can be seen from Figure 24, there is a definite lag in the response of the photocell-lamp combination to the control voltage. This lag is most noticeable as the control voltage increases and the resistance decreases. It should be pointed out that the photocell voltage traces of Figure 24 are inverted to allow easier comparison of the rise and fall times. As the control voltage decreases there is very little lag. As can be seen further, the lag is reduced

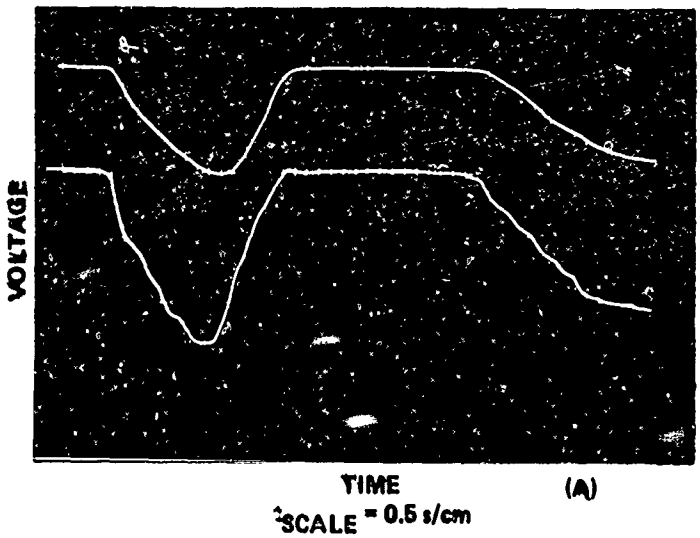

VOLTAGE ACROSS
PHOTOCELL (INVERTED)
2v/cm

CONTROL VOLTAGE
2v/cm
(MAX ≅ 9 VOLTS)
(MIN ≅ 4 VOLTS)

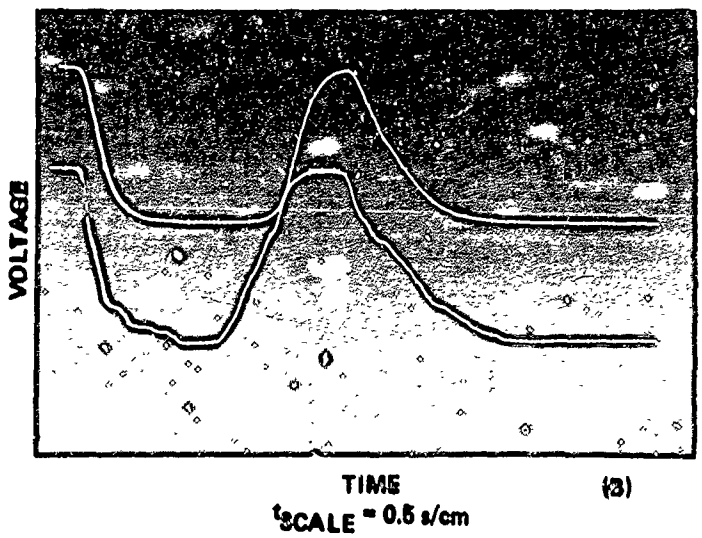

VOLTAGE ACROSS
PHOTOCELL (INVERTED)
5 v/cm

CONTROL VOLTAGE
2 v/cm
(MAX ≅ 15 VOLTS)
(MIN ≅ 7 VOLTS)

Figure 24. Oscilloscope Photographs of the Voltage Across the Photocell as the Control Voltage is Varied Over Two Voltage Regions

the lag is reduced greatly by varying the control voltage over the higher voltage range of Figure 24b. A large part of this lag is attributable to the incadescent lamp rather than the photocell. There is a visibly noticeable lag between the application of increased control voltage and increased brightness of the filament. Unfortunately there was no optical measurement equipment available that would allow separating the lag due to the lamp from the lag of the total photocell-lamp combination. Nevertheless, it is felt that the total lag could be decreased considerably (possibly to the point where it would be insignificant) by using a solid-state lamp instead of the GE313. For example, the Monsanto MV50 is a diffused gallium arsenide phosphide diode that emits light in the visible spectrum (peak emission wavelength = 6500 Å). It has a turn-on and a turn-off time of 1 nanosecond. It is very likely that by using a light source of this type and a photocell whose peak spectral response is in the 6500 Å range, an acceptable time response to the control voltage could be obtained. Furthermore, because there is only one positive slope on the control function, a small "lead factor" could be designed into the breakpoint of this positive slope to help compensate for the time delay.

Light history effect would be of no particular concern in this application. If this circuit were used in a missile control system it would be enclosed in a sealed box and would remain in total darkness until the system is turned on. Therefore, the conductance from one photocell to the next should be uniform and a standard calibration technique could be worked out.

6. Selection of the Best Gain Control Concept

Although all of the gain controllers can be used to control the gain of the directional control system as a function of the control voltage, G(t), there is one approach that is clearly superior. All of the approaches described met the requirements that they all be solid state electronics, lightweight, and require low power (if the solid state light source is used in the photocell-lamp circuit). It appears that one of the approaches using the variable resistor in the emitter lead of Q2 would be the easier choice to incorporate into the present directional control electronics. The present step-gain controllers could be removed and the new variable resistor circuit installed in their place. Very little package redesign would be necessary.

Unfortunately, both approaches that use the variable resistor approach have serious drawbacks. The FET approach is the simplest and probably would be the least expensive but it lacks the necessary range of gain variation. The nonlinearity of the semilinear region is probably not large enough to preclude the use of this concept if a smaller range of gains was needed.

The photocell-lamp concept offers more than enough gain variation so that this is not a source of difficulty. The gain versus control voltage characteristic, while nonlinear, is not so grossly nonlinear as to preclude the use of the circuit in LANCE. The main drawback for this circuit is the time delay (or lag) in its response to the control voltage.

Although it is recognized that the exaggerated time delays seen in the experimental circuit would be considerably diminished through use of a solid state light source (light emitting diode), this is nevertheless an area of concern. If the third alternative had not been so promising, this approach would have been further pursued to the extent of purchasing solid state lamps and re-evaluating the circuit with them. However, time was a factor which made this approach undesirable.

The other alternative, the electronic multiplier circuit, appears to meet all the requirements. This design (Figure 10) does require slightly more modification to the AC amplifier's present design than the other two approaches; but even so, the repackaging effort should be minimal to accommodate this redesign. As can be seen in Figure 11, the linearity of the gain versus control voltage is good as is the reproducibility between the two gain controllers. The gain controller is all solid state and the current requirements are low (maximum quiescent current is 6 ma/multiplier). The Y input impedance is nominally 6 megohms so that the input load presented to the function generator is the 12.5 kilohm of the gain-adjust network. The parallel combination of four of these (two in the AC amplifiers and two in the memory circuit) gives a total impedance of slightly greater than 3 kilohms. The Model 741 operational amplifier is rated for 20 volts (peak to peak) when operating into a load resistance of 2 kilohms. Therefore, the function generator should experience no difficulty in driving the total gain control system without the aid of buffer amplifiers. From these considerations it seems that the best choice of the candidate gain controllers is the electronic multiplier approach.

7. Dual-Gain Capability

It is necessary in the LANCE DCE to have two sets (or bands) of gains available because the basic LANCE must be capable of carrying either a light or a heavy warhead. Figure 25 shows the nominal static margins for both conditions. In the present (step gain change) DCE, the same high gain is used for both heads but a higher or lower final gain is used depending upon the warhead. Figure 26 is a schematic of the timing circuit which drives the gain change circuits of Figures 9 and 13. When the warhead is mated to the missile, a jumper in the connecting plug between the gain 3 signal input and 22 volts enables gain 3 and disables gain 2. If the other warhead is used, the connection between the gain 3 signal input and 22 volts is left open which enables gain 2 and disables gain 3.

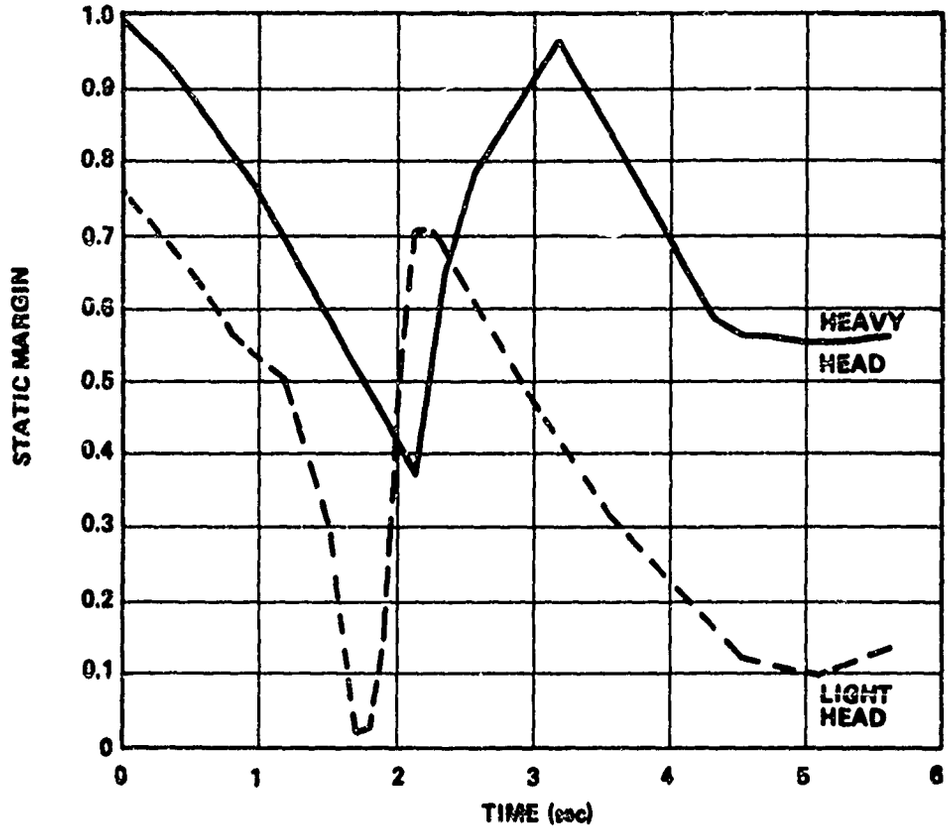

Figure 25. Static Margin Versus Time for Light and Heavy Heads

If the continuously variable gain control system is to be applied to the LANCE DCE, it will be necessary to change the basic function generator circuit of Figure 5. Although the two static margin curves of Figure 25 are generally similar, it will be necessary to have two function generators if it is desired to closely approximate both curves. To effect a small savings in space and components, the common elements of both function generators can be shared. The time-base generator and inverter (amplifiers 1A and 1B of Figure 5) and the associated relay and voltage divider can be common to both generators as can the summing amplifier and the initial condition source. Then it is only necessary to switch the resistor and diode networks to change the break points and slopes. Figure 27 is a schematic diagram of the dual-band function generator. One resistor-diode network will have the same values as Figure 5 (for the light head) and the other network will be chosen to simulate the optimum heavy head gain (which will be essentially the same as the curve of Figure 25). The actual switching from one gain band to the other can be accomplished in either of two ways. Figure 27 shows how jumpers in the warhead connector could be used to do the switching similar to the present system. The disadvantage is that it requires 15 wires to be run to the

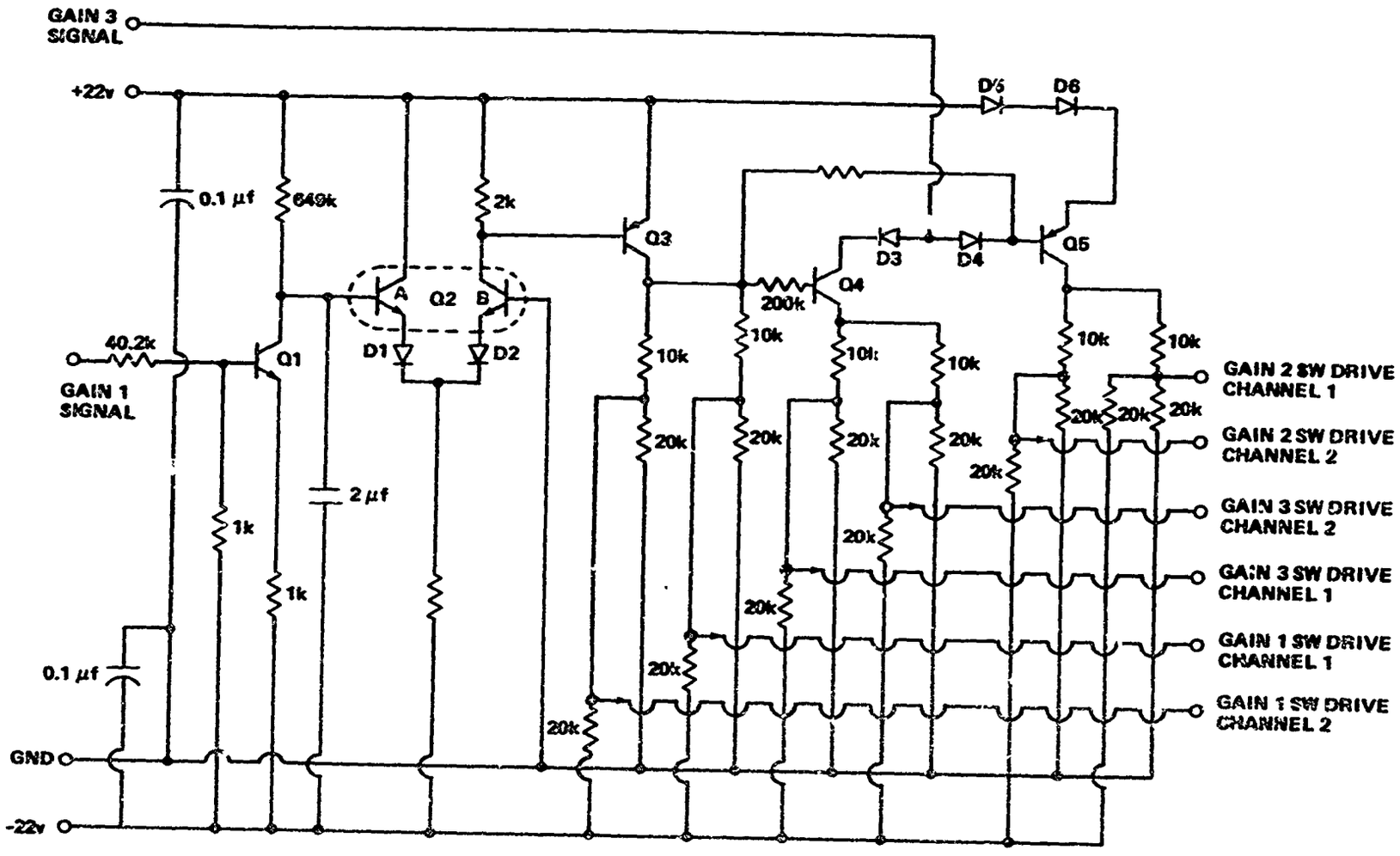

Figure 26. Timing Circuit

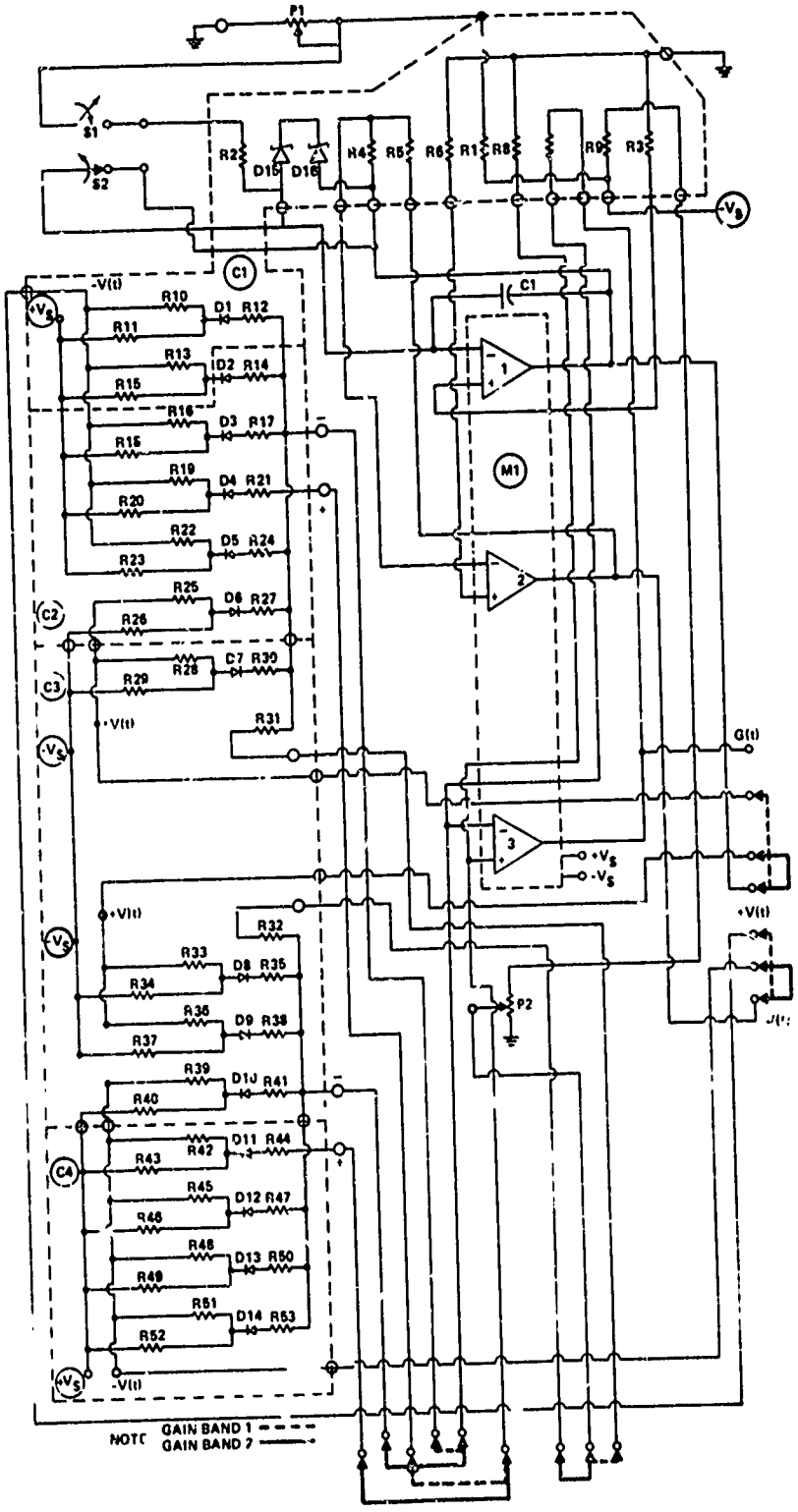

Figure 27. Dual-Band Function Generator

connector and 15 terminals in the connector. It is not likely that these many pins are available for this use and redesign of the wiring harness would be extensive. An alternate method would use relays to do the switching inside the DCE and the same single wire to the warhead plug would or would not activate the relay depending on whether a jumper was connected to the 22-volt supply. In this approach the same wiring harness and connector scheme as presently used would continue in use. It appears from these considerations that using relays to switch to the required gain band would be the most desirable method.

Because the total dual-band circuit of Figure 27 is a more complex circuit than the timing circuit of Figure 26, it will require some ingenuity to package the dual-function generator in the volume alloted to the timing circuit. One approach that seems feasible is the use of the recently introduced CORDIP microminiature passive networks by Corning Electronics. These networks are custom built combinations of resistors, capacitors, and diodes available in standard 14 and 16 pin dual-in-line packages. The 16 pin package has maximum dimensions of 0.86 by 0.28 by 0.2 inch. The circuit of Figure 27 has been sectioned (dotted lines) to indicate how the fixed resistors and diodes might be contained in four CORDIP packages. If the TRI-741 operational amplifier package is also used, then the only other components are two potentiometers, the integrating capacitor, and two to four relays. More study of the packaging problem is required, of course, but it appears feasible to package the dual-function generator in the DCE.

There is another possibility that is worthy of some consideration. It will require that further hybrid simulations be performed to determine how the missile (with heavy head) will behave if the light head function is used with the maximum gain being boosted to the heavy head maximum. That is, the light head curve of Figure 25 transposed up the vertical scale to have the same initial value as the heavy head curve. This is shown graphically in Figure 28. Also a possible compromise phase margin curve is shown that might allow using the same function with different initial conditions for light and heavy heads. If a compromise function could be found or if the light head function with a different initial condition could be used for the heavy head, then the dual-band problem becomes quite simple. The initial conditions of the function generator depend on the voltage divider R4 and R40 (Figure 5) and the input resistor R34. To increase the initial condition from 7.5 (static margin $\times$ 10) to 10, R34 needs only to be reduced from 110 kilohms to a lower value which is found as follows: the amplifier gain is given by,

$$A = \frac{R35}{R34} \tag{6}$$

also,

$$V_{pot}\, A = V_{out} \tag{7}$$

where V_{pot} is fixed at 7.5 volts and the desired V_{out} is 10 volts. Then

$$7.5 \text{ v}\left(\frac{110 \text{ kilohms}}{R34}\right) = 10 \text{ volts}$$

and

$$R34 = 82.5 \text{ kilohms}$$

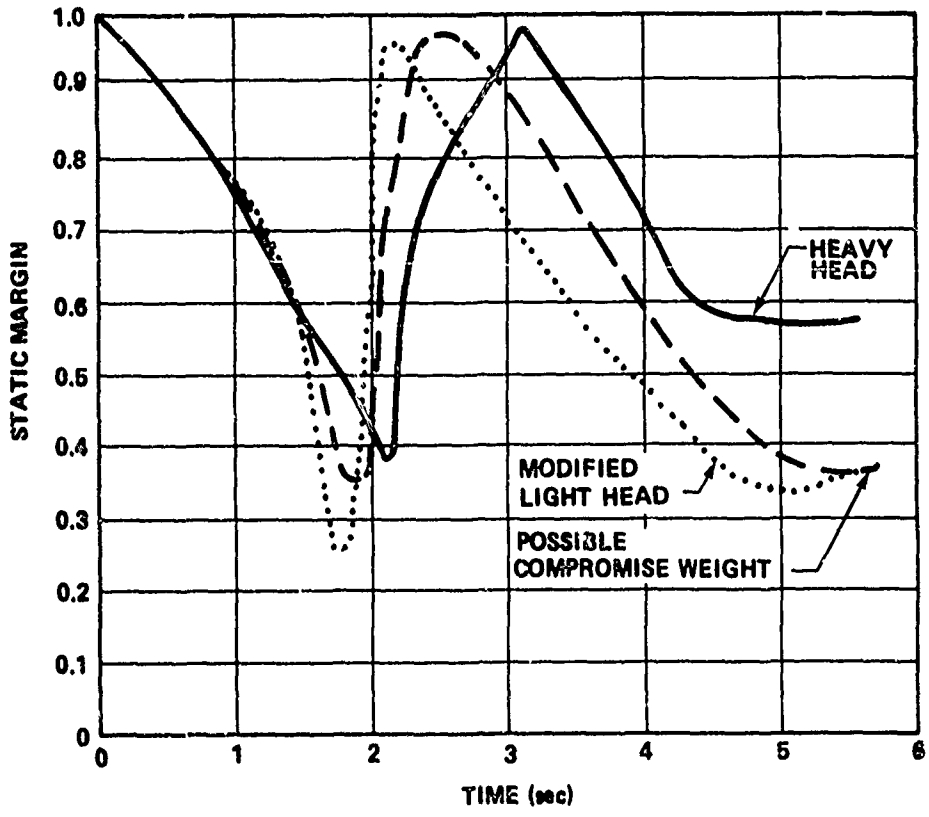

Figure 28. Comparison of the Static Margins for the Heavy Head, Modified Light Head, and a Compromise Weight

Because the initial condition can be changed by simply changing the value of R34, the dual band can be obtained by merely switching values of R34 (either by use of a relay or jumper wires run to the warhead plug). Thus, it is seen that obtaining the dual-gain capability is relatively simple if a compromise gain-time function exists. Before a variable gain system is implemented on LANCE, a considerable amount of simulation effort should be devoted to determining whether such a compromise function exists.

8. Hardware Comparison Between Present and Proposed Gain Controllers

When consideration is given to replacing one electronic circuit or system within an existing package, it is necessary to compare the old with the new circuits to determine how practical such a replacement will be. A comparison between the existing two-step gain changer and the proposed variable gain controller (electronic multiplier concept) will be presented. As already mentioned the two-step controller is made up of a timing circuit (Figure 26), the AC amplifier with switchable emitter resistors (Figure 9), and the gain switching network in the memory circuit (Figure 13). A breakout of the parts required for the step and the continuously variable gain controllers is given in Table I. It should be mentioned that the function generator of Table I is the two-function, dual-band design of Figure 27 and that the quantities of Table I will be a worst-case condition. Table II gives the total parts count for each method of gain control and includes both channels of the directional control electronics.

The circuit-by-circuit complexity of the proposed versus the present system can readily be seen from Table I. It will be noted that the AC amplifier and memory gain changer are simplified in the continuously variable system whereas the complete dual-band function generator is considerably more complex than the timing circuit it will replace. However, Table II points out that the total parts count of the proposed continuously variable gain control system is not significantly greater than that of the step gain system.

9. Conclusions

A continuously variable, automatic gain controller can be applied to the LANCE directional control electronics. A controller has been designed and a breadboard tested that will control the system electronic gain as a function of time in the same manner that the nominal static margin varies. The automatic gain controller (chosen from three concepts investigated) utilizes modern semiconductor devices to achieve a variable gain capability without using electromechanical components with their inherent disadvantages. Because all solid state electronics are used, the added current drain required for the gain controller is low and it is believed that by using presently available packaging techniques, the system can be substituted for the two-step gain controller presently in the directional control system.

The chosen gain controller is not represented as a flight ready system. No temperature or other environmental testing has been performed because of the time and money associated with building flight-worthy circuit boards, complete with military approved semiconductors, and performing the necessary testing. Additionally, it is realized that

Table I. Parts Count of the Circuits for the Step Gain and Continuously Variable Gain Systems

	Resistors	Capacitors	Transistors	Diodes	Integrated Circuits	Relays
Timing (Figure 26)	26 fixed	3	5	6 general purpose	---	---
AC amplifier (step) Figure 9	11 fixed 3 variable	4	5	---	---	---
Memory (step) (Figure 13)	7 fixed 2 variable	---	2	---	---	---
Function generator (Figure 27) dual band	53 fixed 2 variable	1	---	14 general purpose 2 zeners	3 (op-amp)	2-4
AC amplifier (continuous) Figure 10	9 fixed 2 variable	5	2	---	1 (AD530)	---
Memory (continuous) (Figure 14)	2 fixed 2 variable	---	---	---	1 (AD530)	---

Table II. Total Parts Count for the Step and Continuous Gain Controllers

	Resistors	Capacitors	Transistors	Diodes	Integrated Circuits	Relays
Total step control (2 channel)	62 fixed 10 variable	11	19	6 general purpose	0	0
Total continuous control (2 channel)	75 fixed 8 variable	11	4	7 general purpose 2 zeners	5	2-4

before such a system could become part of the LANCE directional control electronics it would be subject to a considerable amount of redesign by the prime contractor which would nullify any environmental testing results. Therefore this study only shows how a continuously variable gain control can be achieved, pointing out the advantages and disadvantages of alternate approaches, and considering briefly the problem of packaging the automatic gain controller in the directional control electronics.