742135

FSTC-HT-23-1105-71

US ARMY FOREIGN SCIENCE AND TECHNOLOGY CENTER

PLASTICS IN ARMOR MATERIEL
CHAPTER 2: PROSPECTIVE PLASTICS FOR ARMOR APPLICATIONS
CHAPTER 4: APPLICATION OF PLASTICS IN SERVICING AND REPAIR OF ARMOR MATERIEL

By

I.M. Belkin
L.M. Romantseva
V.A. Sukhanova

Country: USSR

DDC
RECEIVED
MAY 24 1972
C

This document is a rendition of the original foreign text without any analytical or editorial comment.

Reproduced by
NATIONAL TECHNICAL
INFORMATION SERVICE
Springfield, Va. 22151

Approved for public release; distribution unlimited.

48

UNCLASSIFIED
Security Classification

DOCUMENT CONTROL DATA - R & D

(Security classification of title, body of abstract and indexing annotation must be entered when the overall report is classified)

1. ORIGINATING ACTIVITY (Corporate author)
Foreign Science and Technology Center
US Army Materiel Command
Department of the Army

2a. REPORT SECURITY CLASSIFICATION
Unclassified

2b. GROUP

3. REPORT TITLE
Plastics in Armor Materiél, Chapter 2: Prospective Plastics for Armor Applications; Chapter 4: Application of Plastics in Servicing and Repair of Armor Materiél

4. DESCRIPTIVE NOTES (Type of report and inclusive dates)
Translation

5. AUTHOR(S) (First name, middle initial, last name)
I. M. Belkin, L.M. Romantseva, V.A. Sukhanova

6. REPORT DATE
21July71

7a. TOTAL NO. OF PAGES
44

7b. NO. OF REFS
N/A

8a. CONTRACT OR GRANT NO.

b. PROJECT NO.

c. T702301 2301

d. Requester Mr. Gooch AMXST-CM

9a. ORIGINATOR'S REPORT NUMBER(S)
FSTC-HT-23- 1105-71

9b. OTHER REPORT NO(S) (Any other numbers that may be assigned this report)

10. DISTRIBUTION STATEMENT
Approved for public release; distribution unlimited.

11. SUPPLEMENTARY NOTES

12. SPONSORING MILITARY ACTIVITY
US Army Foreign Science and Technology Center

13. ABSTRACT

Chapter 2 consists of short descriptions of the major synthetic polymer materials in use today including preparation and use.

Chapter 4 is a short description of their uses in fuel supply and repair and construction of armored materiél.

DD FORM 1 NOV 65 1473 REPLACES DD FORM 1473, 1 JAN 64, WHICH IS OBSOLETE FOR ARMY USE.

UNCLASSIFIED
Security Classification

UNCLASSIFIED
Security Classification

14. KEY WORDS	LINK A ROLE	LINK A WT	LINK B ROLE	LINK B WT	LINK C ROLE	LINK C WT
plastics						
polymers						
plastic welding						
epoxide adhesives						
armored materiél						
POL supply						
Plastic Formation						
Packing material						
Food Packaging						
Synthetic Material						
Thermoplastic Material						
Polymerization						
Solid Mechanical Property						
Polyether Resin						
Resin						
Polycondensation						
Molding Material						
Glass Textolite						
Fiberglass						
Armor						
Corrosion Protection						
Adhesive						
Welding						
POL Storage						
Storage Tank						
POL Handling Equipment						
COSATI Subject Code: 11, 19, 13, 07						
COUNTRY CODE: UR, GY, UK						

UNCLASSIFIED
Security Classification

TECHNICAL TRANSLATION

FSTC-HT-23-1105-71

ENGLISH TITLE: Plastics in Armor Materiêl; Chapter 2: Prospective Plastics for Armor Applications; Chapter 4: Application of Plastics in Servicing and Repair of Armor Materiêl.

FOREIGN TITLE: Plastmassy v bronetankovoy tekhnike; Glava II: Perspektivnye plastmassy v bronetankovoy tekhnike; Glava IV: Primenenie plastmass pri obsluzhivanii i remonte bronetankovoy tekhniki.

AUTHOR: I. M. Belkin, L. M. Romantseva, V.A. Sukhanova.

SOURCE: Plastmassy v bronetankovoy tekhnike, USSR Ministry of Defense, Moscow, 1965.

Translated for FSTC by Leo Kanner Associates

NOTICE

The contents of this publication have been translated as presented in the original text. No attempt has been made to verify the accuracy of any statement contained herein. This translation is published with a minimum of copy editing and graphics preparation in order to expedite the dissemination of information. Requests for additional copies of this document should be addressed to Department A, National Technical Information Service, Springfield, Virginia 22151. Approved for public release; distribution unlimited.

Chapter 2: Prospective Plastics for Armor Applications

Polyethylene

The raw material from which polyethylene is made is the gas ethylene which is obtained by the cracking of petroleum products or as one of the coke gases. The ethylene molecules take part in the polymerization reaction which occurs under varying technological regimes: either under high pressure, 1100 - 1500 kg/cm^2, in the presence of catalysts (oxygen or peroxide compounds), or under a pressure of 1 - 6 kg/cm^2 in the presence of organometallic catalysts. The more progressive method is the production of polyethylene under low pressure, since this demands neither the complicated apparatus nor the huge compressor which is necessary for the production of polyethylene under high pressure. In the last few years news of the application of radiation to the production of ethylene has appeared in print. For this can be used, for example, the gamma radiation of the isotope Co^{60} and radio-isotopes of other elements.

Polyethylene is a hard material, white when in thick sheets, transparent and colorless in thin sheets. The density of polyethylene is 0.92-0.96 gm/cm^3, i.e. polyethylene is 2.8 times as light as aluminum and 8.5 times as light as steel. Polyethylene has a number of valuable properties: it is water-impermeable, elastic over a wide range of temperatures, acid- and alkali-resistant, as well as resistant to oxidizing and other chemical energy reagents. Thus, polyethylene has wide application in industry. Vessels made of polyethylene are used for the transport of spirits, hydrochloric, sulfuric and hydrofluoric acids, as well as other acids.

Polyethylene does not absorb water and it is gas-impermeable. From it are made films. From one kilogram of polyethyle can be made 300 meters of film with a width of 120 cm. Polyethylene films find application in the food industry and in every-day life as a packing material which keeps fresh meats, bread, flour, coffee, fruits, etc. Food products packed in

polyethylene film keep for a long time their taste, which is especially important for products which spoil quickly.

An excellent packing material is paper covered with a thin layer of polyethylene. The film is applied onto the paper by special rolling mills or conveyor machines which turn out in a minute 100 meters of paper with a width of 170cm.

A comparatively new use of polyethylene film with a thickness of 0.4 mm is the construction of balloons used for researching of the upper layers of the atmosphere.

From ethylene is made a great deal of tubing for cold water and for water not hotter than 50°C, as well as tubing for acids, alkalis, and salt solutions. Polyethylene tubing is convenient, since it can be wound upon large spindles which makes it easier to transport. Polyethylene tubing is non-corrosive and does not conduct heat well. The most important advantage of polyethylene tubing is its lightness. One kilometer of steel tubing weighs 12,000 kg., while one kilometer of polyethylene tubing of the same diameter weighs only 680 kg. Also, polyethylene tubing is 1.2 times cheaper than copper tubing and 2.5 times cheaper than stainless steel tubing.

Polyethylene has very good dielectric properties. Thanks to this, polyethylene finds wide application in the electrotechnical industry. From polyethylene is made high quality cable insulator for radar, radio, and television equipment.

As far as the working of polyethylene is concerned, it is a typical thermoplast. Polyethylene can be extruded, cast under pressure and blown. Polyethylene also lends itself to mechanical processing: it can be sanded, planed, and drilled.

Lately, in connection with the mastering of production of polyethylene under low pressure, a method has been worked out for the covering of metal surfaces with a protective layer of polyethylene plastic. Such protective films are excellent means of protecting metal articles from corrosion.

Polypropylene

Polypropylene is another polymerized plastic which has properties similar to those of polyethylene. Polypropylene is produced by the polymerization of propylene in the presence of special catalysts. Polypropylene has a regular linear structure. Under usual temperatures it is elastic, strong and light (its density is 0.90 gm/cm^3). Its chemical stability is similar to that of polyethylene: it is acid- and alkali-resistant; it has a higher melting point than polyethylene; it can withstand boiling water and other liquids as hot as 150°C. Polyethylene is used for the production of pipes, centrifugal pumps, components of chemical equipment, containers for storage batteries, medical instruments, electronics

radio-, and television equipment.

Lately, the Kursk Plant for Production of Synthetic Fibers has begun production of a polypropylene fiber which is stronger than nylon or capron (nylon-6) fiber. From such a fiber is produced rope, brush bristle, thread, and fabrics for everyday and technical use.

In the last few years a wide assortment of articles made from machine produced fabrics and textiles made from polypropylene fiber has been shown in international exhibitions in the FRG, in Holland, in France, and in Italy. Now in the USSR a method has been found for the coloring of polypropylene fibers in bright and pretty colors. Great interest has been generated by the porous polypropylene fibers from which has been developed cloth which "breathes" by permitting air in; in the near future this will be widely used by itself and in combination with other fibers for the production of consumer goods.

The copolymers of propylene with ethylene and many other compounds have great technical importance. Such materials have great mechanical strength, high dielectric properties, and resistance to corrosive mediums.

Polyisobutylene

A substance with properties similar to those of rubber can be obtained by the polymerization of isobutylene. This substance is called polyisobutylene. The polyisobutylene molecule is not double-bonded, as is the rubber molecule. Therefore, this substance does not harden, does not "age" in the air, and is not vulcanized.

Polyisobutylene is light (density=0.92gm/cm^3), is water-resistant, and acid-resistant, and is therefore used for producing acid-conveying tubes, replacing stainless steel. Usually instead of pure polyisobutylene a composition of polyisobutylene and filler polymer or other polymers is used. Thus a mixture of polyisobutylene and polyethylene is used as insulation for underwater and ultrahigh frequency cable.

A number of compounds of polyisobutylene and asbestos and talc are used as protective coverings on chemical equipment.

Polyvinylchloride

Today it is likely that there is not a single person who does not know of the use of one of the most widely used polymers, polyvinylchloride.

The method of production of polyvinylchloride is polymerization in the presence of initiators, benzoyl peroxides, hydrogen peroxide and others.

Polyvinylchloride (PVC) is a white, readily-colorable powder. Water, alcohol, and other solutions do not act upon polyvinylchloride. Because

of its high electro-insulating properties, PVC is widely used for the insulation of conductors, cables, and the like. In the preparation of cable one ton of PVC takes the place of three tons of lead.

The use of plastic compounds based on PVC economizes on lead, rubber, cloth shielding, and besides this noticeably simplifies the production of cable. Cable in shielding made from plastic is considerably lighter: the specific weight of PVC is 1.38 gm/cm^3, while the specific weight of lead is 11.34 gm/cm^3.

Polyvinylchloride resin is used for the making of tablecloths, raincoats, and other household items.

Vinyl is made by impregnating fabric with polyvinylchloride. Vinyl is used as decorative or upholstery fabric. Polyvinylchloride foam , (PVC-1, PVC-E), is used for thermal insulation and for cushioning materials.

PVC films are used to cover stainless steel, brass-nickle, and unfinished aluminum. Pipes and rods are made from these materials. The cost of a vinyl-plastic tube with a lenth 10 m., and a diameter of 50 mm. is 15 rubles, of cast iron pipe it is 27 rubles, of a lead pipe it is 42 rubles, and of a stainless steel pipe it is 146 rubles.

From polyvinylchloride is also made artificial leather, and artificial suede. In 1963 288 million pairs of shoes with soles made of artificial leather were made. If real leather had been used instead, more than 10 million animal skins would have been needed.

Fluoroplastics

The plastics obtained through the polymerization of fluoridated ethylene, usually either trifluorochloroethylene (fluoroplastic-3) or tetrafluorochloroethylene (fluoroplastic-4) have many unusual qualities.

The production of fluoroplastics began relatively recently. Now polytetrafluoroethylene is produced in the U.S.A. (where it is called Teflon), in England (fluon), and in the USSR (fluoroplastic-4), while polytrifluorochloroethylene is produced in the USA (Kel-f)(fluoreten), in the FGR (chostaflon), and in the USSR (fluoroplastic-3), [3].

The distinguishing properties of the fluoroplastics are their high thermal and chemical stability, and their excellent dielectric properties. These properties do not change in conditions of high humidity, since the fluoroplastics do not absorb water.

The fluoroplastics markedly widened the temperature limits under which plastics could be used. Fluoroplastic-4 can be used in temperatures from -260 to +250°, i.e. the temperature interval within which it can be used is more than 500°.

In normal temperatures fluoroplastic-4 is white in color and feels like a hard resin; under a temperature of about 327°C it becomes plastic and transparent. The thermal decomposition of the fluoroplastic begins at about 450°C. It does not burn and does not swell in water.

Nevertheless, the most remarkable property of fluoroplastic-4 is its unusual chemical stability which exceeds the stability of all other known materials, in which number we count the noble metals gold and platinum. Fluoroplastic-4 is impervious to the action of hot sulfuric acid and concentrated hydrofluoric acid, alkalis, bromine, chlorine, fluorine, hydrogen peroxide, ozone, etc. Even "czars' vodka," (a boiling compound of one part nitric acid and three parts concentrated hydrochloric acid) shows no effect on it. It won't go into solution, and it absorbs no organic solution. Only in relation to molten alkali metals is this plastic unstable. The metal sodium at 200°C slowly destroys it.

The exceptionally high dielectric properties of the fluoroplastic-4 independent of the frequency of the current and of the temperature (within the limits of -60° to +200°C.) permit its use in high frequency and ultra-high frequency installations.

The low coefficient of friction of the fluoroplastics makes possible their use as bearings; such bearings last for 20 years in the same conditions under which steel bearings break within one to one and a half years.

The fluoroplastics lend themselves well to mechanical working (machining, drilling, milling, sawing, etc.)

By adding to this polymer fillers (graphite, asbestos, coke dust, glass fibers) it is possible to change and improve its physical properties, i.e. its buckling strength, its hardness, and it thermal-conductivity.

Regardless of the difficulty encountered in the making of articles from fluoroplastics and of the expense (one kg. costs approximately 40 rubles, while one kg. of polyethylene costs 68 kopecks), from it are manufactured items for the atomic and chemical industries, tubing, valves, stopcocks, and other components which work in corrosive media.

For example, a stainless steel coil in an apparatus used to make hot sulfuric acid lasts 6-8 months, while the same coil made from normal steel with a coating of fluoroplastic lasts 1.5-2 years.

Soviet industry has mastered a new method for the making of extremely thin calibrated films (with a thickness of 5-15 microns) out of fluoroplastic-4. These films keep their elasticity even in very low temperatures (down to -100°C.).

The preparation from fluoroplastic of the fiber, "ftorlon," which has a relatively high density has been mastered. It is possible to use this fiber under conditions where corrosive media are resent and under high temperatures which other fibers cannot withstand.

Fluoroplastic is often called a material of the future, but even

now rocket and rocket ship components are often made from fluoroplastic. Over the border they make nozzles, gaskets, fins, and the nosecone which is meant to return in the atmosphere, and even the insulation for temperatures up to 3300°C., and components of airplanes, of equipment used in atomic energetics, of components used in accelerators of elementary particles out of fluoroplastic.

Fluoroplastic has still another important property. Imagine, a rocket returns from space and enters the atmosphere. In a fraction of a second the temperature on the surface has risen several thousand degrees. The outer skin of the rocket, made of fluoroplastic, begins to vaporize , but the vaporization goes so slowly and dissipates so much heat that several minutes pass before even 2-3 mm. of the surface has vaporized. It is very important that the surface does not melt, but turns into a gas, and that because of the poor thermal-conductivity of the fluoroplastic the temperature on the surface can reach 6500°C., while at a depth of no more than a few millimeters the temperature remains 0°.

The properties of fluoroplastic-3 are similar to those of fluoroplastic-4, although the chemical stability of the first is less: Fluoroplastic-3 is destroyed, for example, by chlorosulfonic acid, by fluorine, and by some organic solutions.

Polystyrene

Polystyrene, made by the polymerization of styrene (vinylbenzoyl), finds wide application in all scientific-technological and industrial fields.

Styrene is easily polymerized; the process occurs even under room temperature. Polystyrene is water-resistant and has high dielectric properties, permitting its use as a high frequency dielectric. From polystyrene are made components of radio and electronic equipment and cable sheathing of high-frequency cable. The dielectric constant for a frequency of 10^6 gh is 2.6-3.0. Its high alkali- and acid-resistance permits its use as a anti-corrosion material for chemical instruments and laboratory vessels.

Because of its transparency and its high coefficient of light refraction, polystyrene is used in the manufacture of optical glass, transparent models, and toilet articles; because of its physiological harmlessness, it is possible to make out of it products of hygenic significance and containers for the pharmaceutical industry.

The disadvantages of polystyrene are its brittleness, its low temperature-resistance, and its inclination to age. To remove these disadvantages, copolymers of styrene with acrylonitrile and divinyl which have good mechanical properties, resistance to the effect of the atmosphere, resistance to corrosive mediums, and also resistance to breaking, are used.

The most widely used brands of polystyrene found across the border are

"trotikul" and "viktron." These brands have similar properties to the polystyrene produced in the USSR.

Polystyrene foams and poro-foams ("poroplasty").[1] Very light materials, i.e. foam and poro-foam, find wide application in construction, in the building of refrigerating units, in transport, and in other branches of industry as well as in everyday life. The specific weight of such materials is 0.01-0.2 gm/cm^3. We can compare this to the specific weight of other materials: pine-wood=0.5, oak=0.8, brick=2.3, concrete=1.35-2.33, and steel=7.85 gm/cm^3.

An idea of the significance of such a low specific weight is given by the following example: one cubic meter of foam with a weight equal to 30 kilograms can keep afloat in water 970 kilograms, while one cubic meter of wood with weight 500-600 kg. can keep afloat only 400-500 kg.

Balls of polystyrene foam are used in the production of life-saving devices. A ball with a weight of 17 kg. can keep afloat 320 kg.

From foam are made sound- and heat-insulating coverings for floors, ceilings, and walls; these materials have significance in ship and plane building.

The most widely used foams are PS-1, PS-4 (USSR), styropor (FGR) and styrofoam (USA). Styropor slabs of 1 cm. thickness have the same heat-insulating properties as brick with a thickness of 20 cm.

Polyvinyl Alcohol

Polyvinyl alcohol is not produced directly through polymerization, but instead by the saponification of polyvinylacetate, and therefore contains up to two percent acetylene groups.

Polyvinyl alcohol is most often used in a plasticized form, for which the best softening agent is glycerin. This polyvinyl alcohol has high elasticity and is used in the making of gasoline and gasoline resistant hoses. Polyvinyl alcohol with a small amount of softening agent is used in the preparation of articles made of artificial leather; for example, drive belts, and polishing disks, and the like.

Because of its physiological harmlessness, polyvinyl chloride is used in the food industry (as a gelling agent). Surgical thread made from polyvinyl alcohol disappears as the wound heals.

Polyacrylates

The polyacrylates, especially the polymethylmethacrylate, i.e. the polymer of the methyl ether of methacrylic acid , which is called "plexiglass" or organic glass has won general acknowledgment. [3,4]

[1]Foam materials with open, connecting pores are called "poroplasty," and foams with closed, non-connecting pores are "penoplasty," (foams).

This polymer is made through the polymerization of the methyl ether of methacrylic acid , heated in the presence of peroxide initiators. By heating the polymer to 300°C., one can again change it into a liquid, since it undergoes the reverse process, depolymerization. This property of the polymer is used for the waste products.

Organic glass is transparent; it allows in 73.5 % of the ultraviolet rays, while at the same time normal silicate glass admits less than one percent. The combination of extreme transparency and mechanical strength makes possible the use of organic glass as windows and glazing in cars, planes, and also its use in the optical and watch industries. Its basis disadvantages are its low heat-resistence and low surface hardness.

Polymethylmethacrylate articles are made through the processes, stamping, vacuum-forming, pressing, blowing, etc. Individual articles of polymethylmethacrylate can be welded with a stream of air heated to the temperature 200-225°C.

Fiber-glass plastic made with a base of polyacrylates keep a reasonably high strength (1200 kg/cm^2 -- breaking strength) and are heat-resistant to 200-250°C.

The introduction into the polymer chain of reactive groups (hydroxylic, aminic, double salt, and others) opens wide possibilities of further modifications of polyacrylates, and makes possible their conversion into valuable thermoreactive polymers. Such polyacrylates could serve as bases for heat resistant coverings of foams and bonding agents.

Thus, with a polyacrylate base, containing free hydroxylic groups (F-3), can be produced foams with heat-resistance to 300°C., while at the present time is produced polyurethane foam, PU-101, which can withstand heats of only 170-180°C.

Further research in the area of polyacrylates is opening new perspectives of industrial use in various branches of industry.

Foreign brands of organic glass based on polymethylmethacrylate which are widely used are the german "plexiglas," the english "diakon," and the american "lucite."

Polyformaldehyde

One of the new synthetic materials is polyformaldehyde which is a linear polyplast of formaldehyde. Polyformaldehyde is obtained through the polymerization of extremely pure formaldehyde in an inert solution, for example, toluene, in the presence of catalysts (amine or metal-alkali salts of stearic acid). An important characteristic of polyformaldehyde is its low cost, because its preparation demands only the cheap and common substance, formaldehyde.

Under normal temperatures it is a crystalline powder which melts at 180°C., and is easily colored different colors. Polyformaldehyde is thermo-

plastic and is easily worked by the methods of extrusion, pouring under pressure, and pressing.

Articles made of polyformaldehyde are distinguished by their durability, resilience, handsome outward appearance, and their high wear-resistance. They keep their elasticity and mechanical durability in temperatures up to 120°C. Humidity in the air has almost no effect on the mechanical properties of this polymer since it absorbs so little water. Polyformaldehyde is smooth to the touch and has a very low coefficient of friction. The good anti-friction properties of polyformaldehyde make it useful in the production of bearings which work without grease and in the making of other machine components (bushings, gears, etc.). Polyformaldehyde is one of the few materials which combine good physical-mechanical properties with high dielectric properties. This material is characterized by low electrical conductivity over a wide range of frequencies even under high temperatures.

In comparison with zinc, polyformaldehyde has five times the specific tensile strength. It can be reworked six times as often. It can be drilled, ground, milled, and polished. Polyformaldehyde is considerably more impermeable to gasoline fumes, alcohol, ether, and chlorine compounds than is polyethylene in film form. Because of this property, one can predict a great future for polyformaldehyde in the film manufacturing industry.

A disadvantage of polyformaldehyde is its low resistance to acids and alkalis.

Nevertheless, the combination of valuable properties possessed by polyformaldehyde makes possible its use as a construction material, as a replacement for non-ferrous metals and alloys in machine construction, instrument building, radio engineering, and even in the manufacture of components of refrigerators, tableware, and other everyday and household articles.

Of the foreign brand names of polyformaldehyde, widely known is "delrin."(USA)

Epoxide Resins

Epoxide resins are manufactured in our industry through the reaction, polycondensation of epichlorhydride with diphenylpropane. A molecule of the resin contains the epoxide group

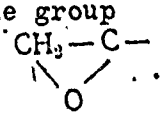

The properties of the epoxide resins can be changed a great deal, depending upon the relations of the components and on the conditions of the process. In view of their linear character of their molecule, epoxide resins of light molecular weight are thermoplastic, and because of its softness, solubility, and low water-resistance this substance is not useable for a number of technological purposes. With the addition of hardeners,

epoxide resins become three-dimensional polymers. This is acheived through the addition of certain organic compounds; for example, amines and thermo-reactive resins (phenylformaldehyde or urea-formaldehyde resins), and by other methods.

The advantages of epoxide resins are their small amount of shrinkage, and their high adhesive quality to metal, glass, wood and other materials. Epoxide resins can withstand temperatures up to 120°C. and have great mechanical strength.

Epoxide resins mix easily with other polymers which is used in the making of materials with the properties stated above.

Of these mixtures containing epoxide resins, most interesting are epoxide-phenolic resins (which in comparison with epoxide resins have great heat resistance), epoxide-polyester resins (which have high impact resistance), epoxide-polyamide resins (which have high adhesive properties in comparison with polyamides). Epoxide resins are used to make glues, liquid and laminated plastics, lacquers, etc.

Glues made from epoxide resins give such tight bonds that it is possible to use them successfully for the "glueing" of metals in place of the usual processes of welding and riveting.

This method of glueing is used, for example, for the components of helicopter rotors and automobile brake-drum lining.

Glues based on epoxide resins are used in liquid form as well as in powder and stick form(for example, "aral'dit-1). To use "aral'dit-1" the surface of the metal is heated to 220°C. and either the powder is sprinkled on, or the stick is rubbed on. The glue melts and flows onto the surface to be glued. The glueing takes place in a temperature between 140-240°C. in the course of 2-10 minutes (the higher the temperature, the less time it takes).

The two-component glue VK-32-EM is for the glueing of steel, duralumin, and other metals when heated. The strength of the adhesive bond in a temperature of 20°C is sufficiently great (150-170 kg./cm^2).

Epoxide glues harden with the application of heat (with the addition of anhydrides of organic acids) and without heat (with the use of amines as hardeners).

The Institute of Welding Technology in Bratislavia, Czechloslovakia prepared for a machine construction exhibit a model of a bridge in which all parts were glued together with epoxide glue. For the bridge of length six meters and width 2.6 meters made of duralumin panels with a thickness of 1.5 mm. only six kilogramms of glue were used.

In the last few years epoxide resins have begun to be used in the manufacture of dies; this has great significance in the mass production of machines. Earlier such dies were made of metal, and this demanded a great amount of skilled labor. Thus for the manufacture of light automobiles,

...rly 300 large, 900 medium-sized, and over 1.5 million fine dies and stamps were needed, on the production of which was usually spent 1-1.5 years. By mastering the method of casting plastic blanks for the production of these dies, the time needed decreased 10-15 times. This is especially important considering the tremendous volume of industrial construction going on in our country. Now, to retool for a new series of machines is much easier and much quicker than before; this in its turn lowers the cost of the machines themselves

Epoxide resins are widely used as brightly colored coverings. In these cases the resin is already hardened into patterned sheets. Epoxide resins are very effectively used as binding agents in the moulding of large articles by the contact process with the use of fiberglass filler.

Using epoxide resins as a base electro-insulating compounds, hardened by both the hot and cold method, are made. These compounds are water-resistant, can withstand temperatures up to 120-130°C, and are used for the filling of circuit coils, transformers, choke coils, for the strengthening of the turns of the coils in electrical machines, for the glueing of high-voltage porcelain insulators, and for insulation at the connecting point of conductors.

The use of epoxide resins in the electronics industry economizes on copper, lowers by three to four times the weight of transformers and markedly improves the insulation quality.

Powdered and fiber materials are used for the making of these compounds; for example, glass and cotton fibers, and powdered iron. The brands of epoxide resins made and used in the Soviet Union are ED-5 and ED-6.

Polyamide (Nylon)

Polyamides are synthetic materials which contain in their chains the amide group —CO—NH— . To this group belong capron, nylon ("anid"), "enant," and others. Their molecules have a linear structure and consist of repeating structural units which contain amide groups from which comes the name, polyamide.

Depending on the starting materials, polyamides are divided into two groups. The first group of polyamides is the polymers of the salts of hexamethyldiamine and dibasic organic acids. The second group of polyamides is obtained by the polymerization of aminocarboxylic acids. Besides the homogenous polyamides of each of these groups, also manufactured are the mixed polyamides polymerized together.

The homogenous polyamides are hard thermoplastic polymers with good flex strength, resistant to wear, and with a high melting point (+200°C.). Polyamides are resistant to cold alkalis, to dilute acids, to organic solutions, to the action of microorganisms, to mould, and to washing substances. They are extremely cold-resistant (remain elastic at -50°C.).

Thanks to these properties, homogenous polyamides are widely used in the making of various machine parts (Illus. 10).

Mixed polyamides, as opposed to homogenous polyamides, have markedly wider limits of plasticity within the limits of their change from solid state to melted state. For example, the polyamide resin C-6 is a product of joint polycondensation of the salts CG and AG and caprolactam under a high temperature.

The resin C-6 is meant for polyamide films, films made from mixed polymers and also pressed materials. Lacquer films made from the resin C-6 have high elasticity and can be easily reinforced with other materials.

Lately, the polyamides-for example, capron-are being used for the making of machine parts (bearings, pinion gears, bushings, and the like). Strength, high resistance, a low coefficient of friction, elasticity under low temperatures, the possibility of molding a large number of parts with complicated configurations are qualities which make these material irreplaceable in the making of machine parts. Now the polyamides successfully compete with ferrous and non-ferrous metals: one ton of capron replaces eight tons of brass or bronze, seven tons of copper or two tons of aluminum.

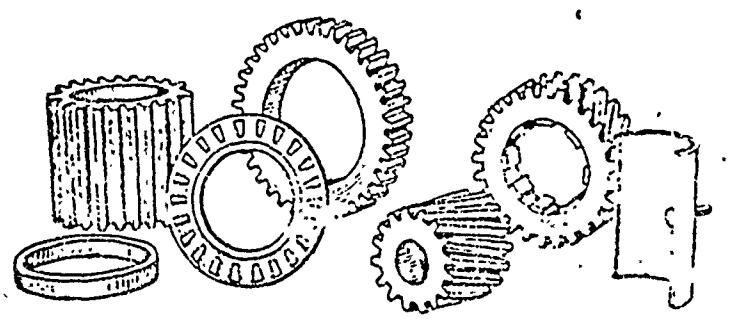

Illustration 10. Parts made from polyamides.

The polyamides are distinguished not only by their strength and wear-resistance, but also by their excellent resistance to the action of oil and grease, gasoline, ether and other solutions. Parts made of polyamides (bearings, gears, and cams, and others) work well in corrosive media, as well as in conditions of poor lubrication (or completely without lubrication).

From polyamides are also made the rotors for centrifugal pumps, needle valves for hydraulic drives, the screw-propellors of steamships and cutters, gaskets, and braces. From polyamides can be made films which are excellent materials for covering hotbeds and greenhouses.

Polyamide resins can be used alone or with fillers. Thus, the polyamide P-68-T10 is a polyamide resin with talc as a filler. It is used as a electro-insulator, as a antifriction substance, as a building material in electrical engineering and machine construction. It can also find use in the making of parts (for example, in frictional joints with insufficient lubrication).

At this time polyamides are basically used in the production of syn-

thetic fibers, items from which distinguish themselves by their strength, resilience, and chemical stability. These items lose little strength in humid conditions; they are pleasing to the eye; they clean easily, do not rot , and are not damaged by moths.

In the Soviet Union the most widely manufactured fiber is capron. This fiber is very valuable because of its abrasion resistance and bending strength and tensile strength (60-70 tensile km[1]). The high cold-resistance of capron permits articles made of capron to retain their elasticity in temperatures down to -70°C. The hygroscopicity of capron is in all 3-4%, while the specific weight is 1.13-1.15 gm/cm^3. It is 2.2 times as light as aluminum and 7 times lighter than steel.

Capron fiber has many technological uses. The ability of capron to retain 93-95% of its strength while wet permits its use in the manufacture of rope and fishing gear, where one ton of capron supplants 4-6 tons of hemp and flax.

Capron rope with a diameter of 30 mm. can support 1740 kg., where hemp rope of the same diameter can support only 680 kg.

From capron obtained by various methods can be manufactured parts of radioelectronic equipment(boards, brackets, knobs, insulators). To increase its hardness, to capron can be added 2-5% of graphite powder.

Articles made of babbit B83 wear twelve times more than those made of capron; articles made of bronze Br-MC-3-18 wear seven times more than articles made of capron with 5% graphite. The wear-resistance of capron undergoing dry friction is twice that of textolite and 100-150 times that of bronze. In connection with its high wear-resistance and low coefficient of friction capron is used to make bearings, gears, cams, pulleys and other parts.

In various countries capron carries different names: In East Germany it is "dederon," in West Germany it is "perlon," in Czechloslovakia it is "silon," in Poland it is "stilon," in Switzerland it is "grilon," and in the USA it is nylon.

Polyurethanes

Polyurethanes are new synthetic resins made by the reaction of diisocyanate with dihydric alcohols.

The properties of polyurethanes are reminiscent of those of the polyamides, but polyurethanes are more resistant to the action of oxygen. They are distinguished by high physical-mechanical properties, resistance to dilute mineral acids and alkalis, resistance to water and steam, and also to many organic compounds (hydrocarbons, aldehydes, ketones, and organic oils). Polyurethanes have high adhesive ability and high dielectric properties. The density of polyurethanes is between 1.17-1.22 gm/cm^3, and the yield temperature is between 175-182°C. The limit of their breaking strength is between 500-600 kg's., and the water absorption rate is 0.14% per 24 hours.

[1]Tensile kilometers are the units of fiber strength which show the length to which the thread can be extended before it breaks from its own weight.

The usual polyurethanes are thermoplastic resins with linear structures and high melting points. But polyurethanes can also be thermohardening if they are made by the reaction of diisocyanates with dihydric alcohols.

From polyurethanes are made construction materials, electroinsulating materials, adhesives, colored-lacquer coverings, gasoline- and oil-resistant rubber, synthetic fibers, artificial leather, etc. The use of polyurethane instead of natural rubber in the production of tires lengthens their lifetime by three to four times.

Articles made of polyurethane (laminates, pipes, and the like) are manufactured by pressing, pouring and extrusion. Pieces made from polyurethane by pouring under pressure are distinguished by their resistance to water and steam. Therefore, polyurethanes can be used for the manufacturing of filter cloth, drive-belts, and cable insulation.

The polyurethane foams-for example, "porolon"- have especially valuable properties. They can have very low volumetric weights (down to 0.2 gm/cm^3), while at the same time having high mechanical strength (the limit of the strength under pressure is 14 kg/cm^2), and having water-resistance, resistance to the action of solutions, and having the property of being easily colored.

The polyurethane foams can be both elastic and rigid. The elastic polyurethane foams are used to make car seats, plane seats, sponges, pillows, and mats.

The rigid polyurethane foams are used to manufacture heat- and sound-insulation. Wall panels are made from three layers; the inside is polyurethane foam, while the outside layers are plywood.

The Moscow Industrial Council, "sovnarkhoz," puts out a rigid foam, PU-101, which bonds easily with metals, plastic laminates, has a volumetric weight equal to 0.23-0.26 gm/cm^3, and which can be used in temperatures between -60°and +130°C.

Polycarbonates

Polycarbonates are new thermoplastic polymers which by chemical nature are polyesters of carbonic acid. Phosgene, phenol, and acetone serve as raw materials for the production of polycarbonates. Polycarbonates have a number of valuable properties which determine their use.

Polycarbonates have a density equal to 1.2 gm/cm^3, a yield temperature between 285-300°, a limit of compression strength of 900-950 kg/cm^2, a limit of stretching strength equal to 670-750 kg/cm^2, and a water absorption rate of 0.1% per 24 hours.

Of the physical-mechanical properties of the polycarbonate signicant is their high impact strength, the stability of the dimensions of articles manufactured from them, and the resistance of these articles to the action of the atmosphere.

Polycarbonate articles can be made through all the advanced manufacturing techniques, which are known for thermoplasts: pouring under pressure, extrusion, pressing, vacuum-forming, and others.

Because of the good properties of the polycarbonates, they are widely used in many areas of the economy as construction materials (Illus. 11), especially for the needs of the new technology, machine-construction, and of the radio- and electronic industries. From polycarbonates are made strong non-inflammable films for the movie and photo industries as well as insulation films for the electronic industries.

Polycarbonates are resistant to the action of light and oxidizing agents even in temperatures of up to 120°C., although they are not as chemically stable as the fluoroplastics and the polyamides. Their high solubility in several technical solutions permits their forming, spinning into thread, and glueing together.

It is important to mention such valuable properties of the polycarbonates as its taking on of a shiny surface, absence of smell and taste, easy sterilization, physiological harmlessness, and low-inflammability. They look pretty, are transparent and look like plexiglass; they can be colored any tint, transparent or opaque.

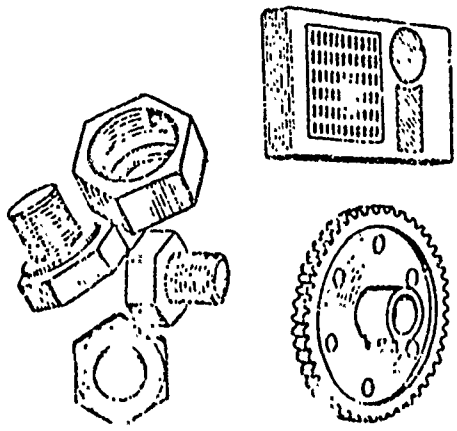

Illus. 11
Articles made from polycarbonates

Polycarbonates lend themselves to mechanical working. They can be machined, drilled, milled, planed, sawed, cut, chiseled, ground and polished. Pieces of this can be welded with the help of hot air and dryed welding-rods made of polycarbonates.

The rigidity and strength of polycarbonates combined with their stable size and low specific weight make them likely materials for the manufacture of body-shells, roofing, safety valves, grating, calculating machines and machines used in everyday life and in the household, and also various fixture parts.

In addition to their high specific impact strength, polycarbonates are characterized by their rigidity, hardness and elasticity. As opposed to

many other plastics, polycarbonate laminates do not shatter on impact. This property makes it fit the needs in many cases of the defense industry.

Polycarbonates are used in the manufacture of medical equipment (hypodermics, ampules, and the like) and in the manufacture of consumer goods (dishware, artist supplies, laminates and films, packing material, etc.).

At the present time, polycarbonates are produced outside the USSR under various brand names, "makrolin," (W. Germany), "penlait" (Japan), and "leksan" (USA).

Polyester Resins

Polyester resins are made through the polycondensation of polyhydric alcohols (glycol, glycerine, pentaerythritol and others) or their derivatives from diacids (maleic acid, phthalic acid, adipic acid, and others). The most widely used polyester resins are glyptal and glycol. They are produced through the polycondensation of ethylglycol and glycerine with phthalic anhydride.

Polyester resins and articles made from them are hardened hot and cold without pressure (vacuum forming and forming under weak vacuum). Therefore, uncomplicated and relatively cheap equipment - wood, plaster, and aluminum forms and jigs-are used. Very strong, large-scale articles can be made; for example, cisterns, truck-beds, boats, ship shells, and wagon chassis, automobile chassis, construction panels, etc.

Lately, the production of fibre-glass materials based on polyester resins has developed. The resin PN-1 (a product of the polycondensation of diethylglycol with the anhydrides of phthalic and maleic acids)is often used for this purpose.

These fibre-glass materials are strong construction materials. They are glass fabric impregnated with the polyester resin PN-1.

Great interest for industry is generated by the polyester resin, polyethyleneterephthalate upon which is based the soviet polyester fiber "lavsana" which takes the place of wool ("darclan" in the USA, "terylene" in England). Polyethyleneterephthalate is made from the dimethyl ester of terephthalic acid and ethylglycol.

The fiber, "lavsan," is heat-conductive, noncrumpling, resistant to cold alkalis, has a high yield temperature (260°C) and is water-absorbing to 0.5%. "Lavsan" has an exceptional resistance to the action of the rays of the sun, high resistance to stretching and other deformations, and can therefore support heavy weights. Concerning thermal stability, material made of "lavsan" exceeds all other technological fabrics with the exception of fibre-glass and asbestos.

The combination of these properties permits the wide use of the fiber "lavsan" in the preparation of engineering fabric, cord, and electric insulating materials, and filtering fabrics.

Ropes, canvas, conveyor belts, insulation films, are also made out of "lavsan." Very strong films with thicknesses between 2-20 mic. are also made.

Lately, springs have begun to be produced out of polyester resins.

Aminoplasts

Aminoplasts are aniline-formaldehyde resins. Aminoplasts are based on resins made by the polycondensation of urea, melamine, thiourea, and dicyanidediamine with formalin.

Concerning the electric-insulating and mechanical properties, the water- and heat-resistant properties, the uric resins give way to the phenolformaldehyde resins, but the uric resins are colorless, light-resistant, and transparent, and so they can be colored in the brightest tints.

Because of the decorativeness of articles made from the aminoplasts, and because they can take on all possible colors, they are widely used in the production of everyday and household articles; for example, dishware, medical equipment, perfume containers, and toilet articles.

The fairly high adhesive properties of uric resins permit their use in the preparation of glueing compounds, lacquers, and complex items; the high refraction coefficient of poured uric resins makes possible their use in the manufacture of optical glass.

The solutions of uric resins in water are used in the textile industry to make products made of cotton, linen, and rayon wrinkle-free.

The impregnation or surface covering with solutions of uric resins in water with the addition of certain salts decreases the flammability of organic materials.

The aminoplasts are less water- and heat-resistant than the phenoplasts, and are, therefore, only limitedly used in electrical engineering. They can withstand over a prolonged time temperatures up to 65°, and can withstand for a short time temperatures up to 90°C. Melamine powders are resistant to arc-discharges; in reaction to electrical arcs they release gases (nitrogen, hydrogen, and others), extinguishing the arc, and are therefore used in the manufacture of dry, high-tension circuit-breakers, in the press-stamping of telephone and radio components, and automobile accessories, etc.

From the aminoplasts are made layered materials by the impregnation of paper with the condensates of uric or melamine-uric resins. It is also possible to impregnate filler material with atomized solutions of the resins in water. They are subsequently dried in a drying room. The filler can be, besides paper, wood veneer.

Layered aminoplasts are used as decorative materials; for example, washable wallpaper. Decorative plastic laminates are made by the pressing of packets of impregnated papers or veneers. For the decorative sheet to have the right color, shade, tint, or pattern, the sheet is either colored

or is printed with a design by which the sheets are made to look like marble or expensive wood.

Using uric resin the foam material "mipora" which is heat- and sound-insulating is produced.

"Mipora" has a very low specific weight which is equal to 10-20 kg/m^3, and a heat conduction coefficient of 0.026 kilocalories/meter •hr • degree.

"Mipora" does not burn, but it chars at 500°C.

Phenoplasts

Under the term "phenoplasts" fall those plastics which are made on a basis of phenol-aldehyde resins.

Of all artificial fibers made with formaldehyde, first place in terms of use and tonnage is held by the phenol-formaldehyde resins in present day technology. In industry they are called by the names, phenoplasts, bakelites, carbolites, and the like.

Phenol-formaldehyde resins are made by the polycondensation of formaldehyde

$$\left(\begin{matrix}H\\H\end{matrix}\!\!>C=O\right)$$

with phenol (C_6H_5OH) and crezol ($C_6H_4(CH_3)_2$), as well as with their derivatives.

The use along with the phenols of their derivates leads to the forming of various types of resins with various chemical and physical properties. The joint reaction of phenols with formaldehydes is a complicated chemical process called polycondensation during which a large number of stable intermediate products which are able to react with the starting chemicals as well as with each other are formed.

Normally, the joint reaction of phenol with formaldehyde takes place quite slowly. A number of catalysts - acids and alkalis - are used to speed it up. With either catalyst the reaction proceeds very quickly, but it leads to different kinds of resins. It is possible to make either thermoplastic or thermo-hardening resins, depending on which catalyst, acid or alkali , is used.

In industry the thermoplastic phenol-formaldehyde resins are known by the name, "novolachnye," while the thermo-hardening resins are known as "rezol'nye." In the initial stage the melted or dissolved, thermo-hardening resin is called "rezol." With heating "rezol" goes at first into stage B, or "rezitol," and then into the final stage C, or "rezit."

"Rezitol" does not melt; with the application of heat it only softens. "Rezitol" absorbs solutions, but it does not dissolve. In the final stage C the resin is completely non-soluble and does not soften with the application of heat.

Depending on the initial chemical ingredients, on the conditions under which the condensation takes place, and on the amount of hardening the rezit undergoes, different "rezit's" with varying properties are obtained. This characteristic in turn determines the technical conditions of the working of the resin by means of molding and pouring.

There are three basic types of "rezit:"

1. "BAKELIT," which is obtained from the "rezol" resin made from a mixture of phenol and formaldehyde in the ratio 6:7 with 1% ammonia.

2. "KARBOLIT," in the preparation of which the "rezol" resin is prepared in two stages: first the mixture of phenol and formaldehyde in ratio 7:6 is heated in the presence of 0.5% of zinc acetate; then more formaldehyde is added making the ratio 6 moles of phenol to 7 moles of formaldehyde and this mixture is polycondensed.

3. "NEOLEJKORIT," is made by the condensing of one mole of phenol with two moles of formaldehyde in the presence of 3% sodium hydroxide.

It is significant that the "rezol'nyj" and "novolachnyj" conditions are reversible; through the respective chemical processes the resins can go from one state to the other. By treating the "rezols" with an excess of phenol they can be changed into the "novolach" state, i.e. they become thermoplastic. On the other hand, if the "novolach" resins are treated with an excess of formaldehyde and the alkali catalyst is used instead of the acid, then from "novolak" can be obtained "rezol," and even "rezit."

This remarkable characteristic of the "novolak" and "rezol" resins of changing from one state to the other is widely used in the production of phenoplasts - plastics made on a basis of phenol-formaldehyde resins.

There are two types of phenoplasts: moulded or formed and poured materials.

Poured resins are made from liquid resins poured into moulds and hardened. At present the basic phenol resins are poured "rezit," "neolejkorit," and poured "karbolit." These are hard, tough, non-melting, and non-soluble materials. They are usually made in the form of blocks, sheets, rods and other blank-shapes. Poured "rezit" and "neolejkorit" are used characteristically as decorative resins from which are made especially valuable plastics which are termed "precious." The natural color of the "rezol" resins is yellow. They can be used in the place of ivory, amber, shell and mother of pearl.

More widely used is "neolejkorit" which is very similar in appearance to ivory. It is used in the making of jewelry and toilet articles, billiard balls and technical products, for example electro-insulators, instrument cases,etc.

The transparent, poured resins are also widely used for the construction of models used in the method of optically determining stress in structures. For this a model made of poured resin is subjected to stress and a polarized light is shined through it. Under stress poured resins become optically anisotropic, and on the screen appear iridescent lines which show the stress in the model.

"Karbolit," made first by G. S. Petrovyj in 1912, is a very valuable poured "rezit." Differing from other poured "rezites," "karbolit" has high dielectric properties which permit its use in the electronic industry. At present, because of the wide assortment of available high quality resins, karbolit is used only limitedly. "Karbolit" is put out in block form from which articles are made by machine working. "Karbolit" products - for example, electroinsulators, electrical receptacles, telephones, etc. - have a very black color.

Moulding Material on Long-Stapled Filler

"Voloknit." Long-stapled fillers are used to heighten the mechanical properties and especially the specific impact strength of moulded articles. Representative of this group of moulding material with increased mechanical properties is "voloknit," which is made from a "rezol"-emulsion resin base. The filler is cotton pulp (43-48%).

THE PROPERTIES OF "VOLOKNIT" (FROM GOST 5689-60)

Density, gm/cm^3	1.45
Water-absorption for 24 hours, %	0.4
Marten's yield temperature, °C.	140
Specific impact strength, kg-cm/cm^2,	9
Static-flex strength limit, kg/cm^2	800
Electric strength, kilowatt/mm	4
Specific surface electrical resistance, ohms	10^{10}

"Voloknit" is a stable material in relation to weak acids and alkalis, though strong acids and alkalis destroy it.

"Asborezit's." Phenol-formaldehyde resin is usually used as a binder in the manufacture of the "asborezit's." Chrysolite asbestos of the highest quality as well as talc and kaolin are used as fillers.

The technological process of the preparation of the "asborezit's" consists of mixing, tabletting, rolling and drying.

Articles made of "asborezite" have high frictional properties, and high heat-resistance. "Asborezit's" are primarily used in the making of brake shoes. Also from them are made manifolds and instrument parts which must work under very high temperatures.

Brands widely used in the USSR are KF-3 and K-6-B, the properties of which are listed below.

	KF-3	K-6-B
Density, gm/cm^3	1.7-1.95	1.95
Water absorption for 24 hours, %	0.7	0.5
Marten's yield temperature, °C	200	200
Strength limit, under static bending, kg/cm^2	700	700
" " " ", under compression, kg/cm^2	1000	800
Electric strength, kilowatts/mm	1.0	-

Phenoplast laminates. Plastic laminates are composites made of alternating layers of filler and binder. Cloth, paper, and wood veneers, as well as other materials are used as fillers.

Depending on the nature of the filler, plastic laminates are divided into three groups; textolite, micarta, and wood-laminate plastics.

Textolite. Textolite has great significance among the plastic laminates. Textolite is widely used in machine construction because it combines mechanical strenth near to that of metals with the typical properties of plastics; it is water and chemical-resistant, has good antifriction properties, lightness, etc.

The properties of textolite are determined by the character of the filler (fabric) and its binder (resin), and also the weight relationship between them. Textolite usually consists of approximately 30-40% resin.

Fabric thinner or with greater specific strength makes textolite which is thinner or with greater specific strength. Cotton and the synthetic cloths - "mitkal', byas', capron," and "bashmak"-fabric, etc. - are used as filler.

Impregnated and sprayed fabric is pressed into boards of various thicknesses, from which are made articles through mechanical finishing; some articles can be made simply by pressing impregnated board.

Parts for machine construction and electrical articles can be made from textolite board by machine finishing. Textolite bushings for bearings can be directly moulded or cut and finished from board. Because of the good anti-friction properties of textolite, bushings made of it can work without lubrication, but only with water-cooling of the working parts, since textolite does not withstand heat well. To increase the heat conductivity and anti-friction properties, graphite is added during the preparation of the textolite.

The use of textolite bearings in lathes significantly prolongs their service-life in comparison to those with bearings made of nonferrous metals.

Gears used in the automobile and aviation industries which are practically noiseless, and acid-resistant piping for the chemical industry are made of textolite.

Textolite based on capron and nylon fillers have a number of good technical properties, low water-absorption rate, and non-significant dielectric losses.

The Properties of Textolite, Brand A (GOST 2910-54)

Density	gm/cm^3	1.3-1.4
Limit of Stretch Strength along the base	kg/cm^2	600
Limit of Stretch Strength along the fiber	kg/cm^2	450
Marten's yield temperature	^oC	135

Asbotextolite (Asbestos-textolite) is a laminated plastic in which the filler is asbestos fabric and the binder is "rezol'" resin (the amount

of resin in the impregnated material is 40-50%).

Asbotextolite boards are distinguished by their heat-resistance and good frictional properties. They are used characteristically as brake shoes, belts, and clutch discs.

Nevertheless, the cost and rarity of long-stapled asbestos used in the preparation of asbestos fabric limits the use of asbotextolite.

Besides, the mechanical properties of asbotextolite are not as high as those of textolite.

The Properties of Asbotextolite

Density, gm/cm^3	1.6
Cross-breaking strength, kg/cm^2	1000
Specific impact strength, $kg\text{-}cm/cm^2$	25
Brinell hardness, kg/mm^2	30-45
Oil-absorption, %	1.0
Gasoline-absorption, %	1.0

"Getinaks" (micarta). "Getinaks" is a laminate-plastic with paper filler. It has higher electro-insulation properties, especially where the parts have to work under a humid atmosphere, than textolite.

"Getinaks" is used in the preparation of electro-insulators, sandwich and tubular panelling, gripping jaws, insulating washers, gaskets, tubing, and cylinders.

The Properties of "Getinaks"

Density, gm/cm^3	1.3-1.4
Marten's yield temperature, °C	150-160
Strength limit, kg/cm^2	
Cross-breaking (perpendicular to layers)	1500
Stretching	1250
Compression (perpendicular to layers)	1500-2500

Wood-laminate plastics. At the present, plastics based on wood impregnated with "rezol'" resins are widely used. Wood rods and sawdust can be impregnated with resins, but the wood-laminate plastics made by impregnating wood veneers and subsequently pressing the material are the most widely used by industry and they go by the names, "lingofom," or "fanerit."

Plywood is the wood-laminate plastic with a thickness of 0.5-1.2 mm from which veneers are made. In the USSR birch is usually used; in other countries beech is primarily used.

The division of the wood-laminate plastics into various brands is determined greatly by the method of assembly of the wooden sheets. Thus, all the wooden layers are assembled in such a way that the grain always

runs parallel in the brand of wood-laminate plastic called DCP-A. This construction has the greatest strength in one direction; this property is needed in the construction of bearings, and spindles.

In the assembly of DSP-B, also called delta-wood ("del'ta-drevecina"), after every 10-20 sheets with parallel grains a sheet is added with the grains running perpendicular to the others.

Often the grain is alternated in each sheet; this gives the material equal properties in each of the two perpendicular directions. This method of assembly is used for the laminate DSP-V.

The laminate DSP-G made with a star-shaped assembly by placing the layers such that the grains of neighboring layers run at approximately 30° to each other has a more equal distribution of the mechanical properties.

The wood-plastic laminates have good mechanical properties and are used in ship , automobile, aviation, and machine-construction, as well as in the electronics industry. In the chemical industry they are used in the making of equipment which must work under significant mechanical stress. Wood-plastic laminates are very useful in the making of slip-bearings, noiseless gears, rods and spindles for looms, and for lathe bearings, replacing non-ferrous metals. The use of plastic bearings increases the service-life of the lathes with the subsequent lowering of idle-time(bronze bearings usually have to be replaced every few days or even shifts, while plastic bearings last several months). By replacing the bronze, for every ton of lathe, 120-180 gm of ferrous metal is saved; because of the low coefficient of friction, the expenditure of electrical energy is lowered by 15-25%.

Wood-plastic laminates are effectively used for friction joints in hydraulic assemblies, in ship and crane assemblies, in drilling and earth-moving equipment. Boards and sheets of DSP are excellent materials for home-construction because of their strength, hygenic qualities, and resistance to rotting.

The Properties of Wood-Plastic Laminates

Density, gm/cm^3	1.3
Strength limit, kg/cm^2	
Stretching	1100-2800
Shearing	120-140
Cross-breaking	1000-2800
Brinell hardness, kg/mm^2	150
Water absorption, for 24 hours, %	5

Glass-Fiber-Resin Materials, ("Stekloplastika")

In the last few years, the new materials, based on the compound of high polymers with glass filler, the so-called "stekloplastiki" (glass-fibre-resin materials), have found wide application. It is possible to divide, depending on the mechanical-physical properties, the glas -fibre-resin material which are produced at the present time into the following groups:

1. Steklo (glass)-textolite.
2. Anisotropic "stekloplastiki" of the type SVAM.
3. Fibre-glass.
4. Rigid (resin-bonded) sheet and figure glass-fibre-resin material.

"Steklotextolite." The most widely used form of the native glass-fibre-resin materials is glass-textolite, the industrial production of which began in 1948 in our country.

Glass-textolite is a laminated board material made through the pressing of sheets of glass fabric impregnated with resin binder and laid together in parallel layers.

Glass-textolite can also be made from a combination of glass fabric and cotton fabric. Such materials are produced in flat boards or sheets of thickness 0.5-15 mm and dimensions 1000 X 2400 mm with a volumetric weight of 1.6-1.85 gm/cm^3.

Glass-textolites are used as construction and electro-insulating materials. Glass thread with a thickness of around 0.3mm is used in the preparation of glass-textolite for construction. Glass fabric of thickness 0.08-0.1mm is used for electro-insulating material.

The Properties of Glass-Textolites Depending on Use

	Electrical Glass-Textolite	Construc. Glass-Textolite
Density, gm/cm^3	1.65-1.85	1.85
Water-absorption for 24 hours, %	2.0	2.5-5
Marten's yield temperature, °C	180	185-200
Stretching strength limit, kg/cm^2		
along the base	-	1100-2700
along the thread	-	800-1550

The Properties of Glass-Textolites Depending on Type of Resin

	Phenol	Epoxide	Polyester	Silicone
Specific Weight, gm/cm^3	1.80	1.90	1.85	1.95
Strength limit, kg/cm^2				
Stretching	2800	3900	1800-3500	2500
Bending	3900	5000	2100-3500	2500
Compressing	3000	380	800-3200	2300
Specific impact strength, kg/cm^2	48-55	156	56-65	-

All the brands of the glass-textolites have considerably higher mechanical and physical properties and better electrical properties than the plain textolites, "getinaks " (micarta), and other plastic laminates.

Glass-textolites for construction purposes find along with plastics wide application in the automobile, aviation, machine construction, and other industries. Outside of the USSR they make out of glass-textolites fuselages for helicopters, fuselages and wings for planes and gliders, radar domes, launching tracks for jet engines, shielding, fuel-tank containers, ventilation pipes, fuel-transport tubing.

In our country the best known construction glass-textolite is the brand KAST-V, based on a modified phenol-formaldehyde resin. At present new glass-textolite brands have been developed for electro-insulation; for example, ST-38 (based on the polyesteracrylate 39-EhBC), ST-11 (based on the polyesteracrylate 911-MC), STEhF (on a base of epoxide-phenol resin). Such glass-textolites are used in the electronics industry.

Anisotropic glass-fibre-resin-materials of the Type SVAM. "Steklovoloknistye anizotropnye materialy"-(SVAM), fibre-glass anisotropic materials are glass-fibre-resin materials (laminated glass-fibre sheets) made by the simultaneous application of binding substance upon layerings of parallel, uni-directional, elementary glass fibres.

Depending on the purpose for which the material is being made and the type of resin, the amount of glass fiber in the laminated glass-fibre sheets is 65-80% by weight. Various modifications of the phenol resins are used as binder; for example, amide carbide, melamine, epoxide, unsaturated polyester, polyamide resins, etc. Laminated fiber-glass sheets can also be made by spreading the glass fibers cross-wise upon a removable board attached to a drum apparatus.

Laminated glass-fibre sheets made from glass fibre with a diameter of 15-20 mic. is used for the preparation of very strong construction materials, and made from very thin glass fibre is material with good dielectric properties. By means of hot pressing on hydraulic presses several sheets of unidirectional fibers or with criss-crossed fibers a single sheet of laminate can be obtained. This sheet is called a "steklofanera" (glass-veneer).

The strength of the anisotropic glass-fibre-resin materials along their width and length depends upon the distribution of the glass fibers and the method by which the sheets are put together.

SVAM has good specific strength, exceeding the specific strength of other forms of glass-fiber-resin materials, wood, aluminum and some kinds of steel. Strength of construction material is a very important consideration, but in aviation and rocket construction, in the automobile and tank industries lightness has no less importance. The two factors, strength and lightness, can be combined into one index, specific strength which shows the relation of the strength of the material to its specific weight.

If we compare the strength of the steel, 30XGSA, with a comparable glass-fibre-resin material, we find that the steel has some small advantage. But, if we take into consideration the fact that steel is 4-5 times heavier, than it turns out that glass-fibre-resin materials have a specific strength 3-4 times higher.

Fiberglasses. By fiberglasses are meant certain thermo-hardening fibrous materials based on phenol-formaldehyde and other resins combined with glass fibers by means of direct and poured pressing.

The most widely known fiberglass is the moulding material AG-4 which is distributed under the name "V and S." It is made by different methods and has various characteristic strengths and areas of application.

The Properties of Fiberglasses
(from GOST 10087-62)

Material based on:

A. Continuously parallel glass threads (moulding material AG4C)
B. Broken glass threads (moulding material AG-4V)

	A	B
Specific weight	1.7-1.9	1.7-1.9
Strength limit, kg/cm^2		
Stretching	5000	800
Compression (along the threads) . .	2000	1300
Cross-breaking	2500	1200
Specific impact (kg-cm/cm^2)	150	30

The moulding material AG-47 is made of continuous glass thread, NS-170/2 and NS-150/2 on a base of the same binder as the material AG-4V. The binder is 25%-30% of the total.

The production of AG-4S has a number of advantages over the production of AG-4V; for example, the process is continuous, completely automated, and the manufactured material is very homogenous. The good technological properties of AG-4S permit the making of articles out of it by rolling, spreading, and moulding under low pressure.

Cable made of AG-4S with glass filler tape with a thickness of 1 cm. can support a weight of 2 tons. Water and oil-resistance are valuable properties of fiberglass. A sample made of AG-4 with an area of 1m^2 absorbed in 24 hours 50 mg of liquid.

AG-4 is most widely used in the machine-construction and electronics industries where it is used in place of copper, aluminum, zinc and other non-ferrous metals and alloys. It is estimated that one ton of fiberglass takes the place of three tons of non-ferrous metals in machine construction freeing them for those machines and equipment where metal cannot be replaced by other materials.

Rigid (resin-bonded) and rolled sheets of fiberglass. To the group of rigid (resin-bonded) plastic laminate sheets belong materials obtained through various processes, made of cloth-fiberglass and non-fabric fiberglass, and made from synthetic binder. Phenol, polyester, epoxide, silicon and other resins are used in the preparation of these glass-fibre-resin materials. For the reinforcement of these materials, glass cloth, net, canvas, braids, and unidirectional thread are used.

For the preparation of sheet glass-fiber-resin material various methods are used: contact, spraying, vacuum and compression moulding.

Polyester and epoxide glass-fiber-resin materials are of low volumetric weight while retaining extreme strength because they combine the properties of fiberglass with those of synthetic resins. They are difficult to ignite, non-hygroscopic, and are resistant to the action of the atmosphere. These properties create various possibilities for their application in construction. Transparent, translucent, and opaque glass-fiber-resin materials serve as good material for the building of roofing for houses, summer sport structures, cottages, hospitals, and pavillions.

The largest geodesic "hangar" in Europe was built in England; this spherical structure has a diameter of 21 meters, height of 16 meters, is built to withstand the most difficult conditions -temperatures from -50 to +80°C, winds up to 70 meters/second, and icing to a thickness of 50 mm. This hangar is made up of tri-layer panels made of polyester fibre-glass-resin material. These panels are as strong as construction steel and are five times lighter. Hangars, similar to the one described, can be used in arctic conditions for the locating of radar installations. They are radio wave-transparent.

In comparison with other forms of glass-fiber-resin materials, polyester, flat, fibrous, and shaped plastic sheets, as well as in the shape of small moulded parts and large-scale construction parts are the most widely used.

In other countries polyester and epoxide plastics are used in varied industries as new construction and electro-insulating materials.

Chapter 4: Application of Plastics in Servicing and Repair of Armor Materièl

Plastics and the Protecting of Metals from Corrosion

The conditions under which tanks, self-propelled artillery, armored transports, and special-purpose wheeled vehicles are used and taken care of vary greatly. Some machines are used in conditions of high humidity; others are used in low temperatures; others in high temperatures.

Most metals decay as a result of corrosion. An idea of the amount of metal ruined by corrosion is given by the following statistic. Each year just the direct loss of metal from corrosion is more than ten percent of the yearly yield of smelted metal. This quantity is approximately equal to the yearly production of metal in such countries as France, Italy, Belgium, and Switzerland.

Corrosion makes the machines wear out quickly, decreases their strength and reliability. The protection of metals from corrosion is an important scientific problem, and a number of researchers are working on its solution.

Steps are taken to protect the metals from corrosion beginning with the smelting and continuing with the manufacturing processes of the parts made for the machines. For example, the parts are covered in the factory with thin coatings of chrome, zinc, cadmium, nickle, and copper, and some parts are oxidized, painted, or covered with phosphate.

Steps for the protection of parts from corrosion are taken in the armed forces while the machines are serviced and when they are put in storage. The covering of the parts with lubricating grease (technical petroleum jelly, cannon grease, and others) is given an especially large amount of time and labor; The lubricating grease must be heated, and the grease covering is as a rule covered with paper. At the end of the storage time of the parts they must undergo the changing of the grease which is called re-slushing.

In order to get rid of the time-consuming processes needed for the protection of metals in the armed forces, certain metal parts are replaced

with plastic parts; in the corrosion-proofing of the parts polymer materials - films, pastes, greases, adhesives, and others - are widely used. Polymers increase the storage life of corrosion-proofed articles in comparison with other methods of corrosion-proofing. They significantly lower the cost and work needed for corrosion-proofing. In addition their remarkable properties come into play; for example, they are resistant to the action of acid and alkali solutions, are gas and steam-impermeable, are water-insoluble, are strongly adhesive to metals, and their properties are stable in a wide range of temperatures.

Paper impregnated with an elastic polymer is very successfully used in the protection of metal from corrosion. Often parts are covered with paper impregnated with polyethylene.

Parts covered with such a material will not corrode for a prolonged period of time in a temperature range -50 - +65°C. A protective material is also made from ethylcellulose in mineral oil with the addition of copal, ceresine, and parafin.

Widely used are the polymer films with which corrosion-proofed metal parts are wrapped and covered. The chemical industry puts out various films: cellophane, cellulose-triacetate, cellulose-acebutirate, ethylcellulose, polyamide, polyethylene, fluoroplastic, pervinylchloride, polystyrene, and others.

The most widely used film for corrosion-proofing is polyethylene. At the present more than 30% of the polyethylene made under high pressure in the world is made into film. Polyethylene films are impermeable to steam; their constant diffusion (penetration) of steam is equal to 10^{-7} gm/hr-cm^2, which is approximately 1,000 times less the diffusion rate of cellophane. Experience has shown that polyethylene film of thickness 0.2mm prolongs the storage life of parts by 15 times in comparison with the storage life of articles corrosion-proofed in packing paper.

Metal articles can be reliably stored and kept corrosion-free in sealed packets, sacks, and boxes made of film. In this case the parts are kept insulated from the outside air. Often the film is applied by spraying the articles with polymer, or by spraying the material with which the articles are wrapped. A wrapping paper one side of which is covered with a thin film of polyethylene is made.

For many years an instrument which was corrosion-proofed by means of a thin film on a fabric shell was exhibited at the VDNX. The instrument was covered with cloth tape and wrapped in gauze soaked in starch. On the gauze was applied with an atomizer a dense coat of pervinylchloride resin with a thickness of 1.5mm. Such a film is elastic, gasoline and oil resistant, and retains its properties in temperatures ranging from +40° to -40°C. Corrosion-proofed in such a manner and stored in an open square in various weather conditions for two to three years, the instrument suffered no damage from corrosion.

The so-called "cocoon" (illus. 29) method of protection for war materiél which includes tanks, self-propelled artillery and armored transports is described in detail in print. All important external parts are wrapped and three to four coats of the protective covering (enamel) which includes

in its make-up polyvinylchloride resin are applied. A coat of aluminum paint is applied over the resin, and this paint protects the enamel from the sun. Material corrosion-proofed by the "cocoon" method can be stored in the open. The corrosion-proofing is removed without difficulty; it is cut and peeled off.

Unfortunately, a film which is absolutely impermeable to gases does not exist. Water vapor and chemically active gases contained in the atmosphere penetrate through the films to the metal parts, and as a result corrosion begins. Therefore, areas in which hermetically sealed parts are stored must be kept free of water vapor. To remove the water vapor moisture absorbing materials, silica gel, is placed under the film. The silica gel is periodically checked and when necessary replaced. Ocasionally inactive gases, nitrogen, or inert gases, helium or argon, are pumped through the film into the corrosion-proofed articles.

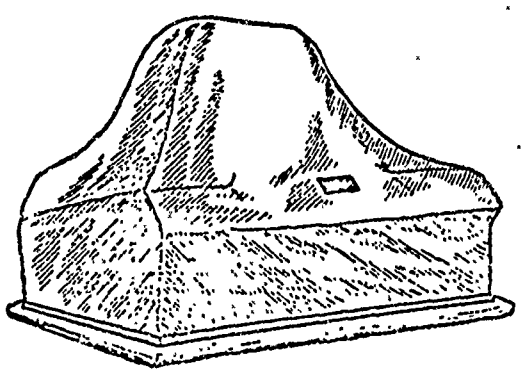

Illustration 29
A Tank corrosion-proofed by means of a "cocoon."

Corrosion retarders and evaporating inhibitors have been widely used in the last few years. In most cases they are complex organic compounds. Well known are the urotropine, benzoate, phosphate, and other inhibitors. Phosphate inhibitor is composed of sodium nitrite, double substituted ammonia phosphate, soda ash and other substances. The inhibitor vapor is adsorbed (absorbed) by the surface of the part, and it protects the part from corrosion for 10-15 years, even in humid atmosphere. According to foreign data, it lasts for 10 to 15 years.

Well known is the very simple method of corrosion-proofing with evaporating inhibitors. Urotropine salts (hexamethylenetetramine) and sodium nitrite are dissolved in water. Paper with which the metal parts are wrapped is impregnated with a 25% solution of the inhibitor. The parts are further wrapped with a parafin paper.

A more effective method for the use of the inhibitors has been suggested by I. Gridnevym [10]. To the solution of the inhibitor is added 10% gly-

cerine, 5% oxyethylcellulose, and 0.5% soda ash. The inhibitor solution thus obtained is very viscuous and therefore remains on the parts even in conditions of high humidity. The effectiveness of the new composition of the inhibitor is shown by the following data. Out of 1,786 corrosion-protected parts in three years only three parts were damaged by corrosion. Using a water solution of the inhibitor in the same time out of 1, 786 parts about 44% were damaged by corrosion.

There exists another method of protecting metal parts from corrosion in which delicate instruments are stored in plastic containers filled with inert gases and water-absorbers.

The anti-corrosion property of oil is greatly enhanced by the addition of polymers. They are sometimes called inhibiting oils. For example, the anti-corrosion property of the dehydrated oil MT-16p is greatly increased with the addition of 1% silicon liquid.

The Spraying of Polymers

The spraying on of thin polymer films onto metal and non-metal surfaces is widely used for the manufacture and also repair of armored materiél. They are sprayed on as decorative coverings as well as for anti-corrosion protection. Small dents in various kinds of parts with thin walls, for example, auto tail-lights, can be repaired by spraying; spraying can be used for the gluing of large-scale parts.

The gas-flame, spinning, vibrating, vibrating-spinning, and suspension methods of covering with polymer have greater significance. Following we examine these methods.

a. Gas-flame technique. The gas-flame technique consists of the blowing of powdered polymer into and through the flame of an acetylene torch; the polymer is thus heated to the temperature of the flame and then melts. The melted particles are forced through the torch nozzle onto the surface of the article. After the polymer cools it forms a strong film on the article.

A simplified schematic of the apparatus used for the spraying of the polymer with a gas-flame is shown in illustration 30. The compressed air from tank 1 is sent through the air-purifier 2 where it is cleansed of dust and moisture. The dry air is lead through the feeder tank 3 where the loosely-packed polymer is contained . The polymer powder is sucked into the burner through the pipe connecting the burner with the feeder tank by means of the vacuum created in the burner 4. Simultaneously a acetylene-air mixture is burning in the burner. The burner is fed through tubes connecting it with the compressed air tank and the acetylene tank. In the burner are two fan-shaped flames through which the polymer powder is blown. The melted polymer particles are blown onto the surface of the article by their own inertia; they adhere to its surface and harden into a film. To increase the film's density it is sometimes rolled.

The technique of spraying the polymer powder, PFN-12, heated to 160°-170°C is used with success for the repairing of dents on the surfaces of

wings, bodies, and cabins of aircraft. Dents used to be repaired with solder, approximately 15 kg. of which was needed for every car. Gas-flame spraying is much more economical, since the powder PFN-12 is five times as cheap as solder. The labor needed for routine repairs is decreased 15% by the new method.

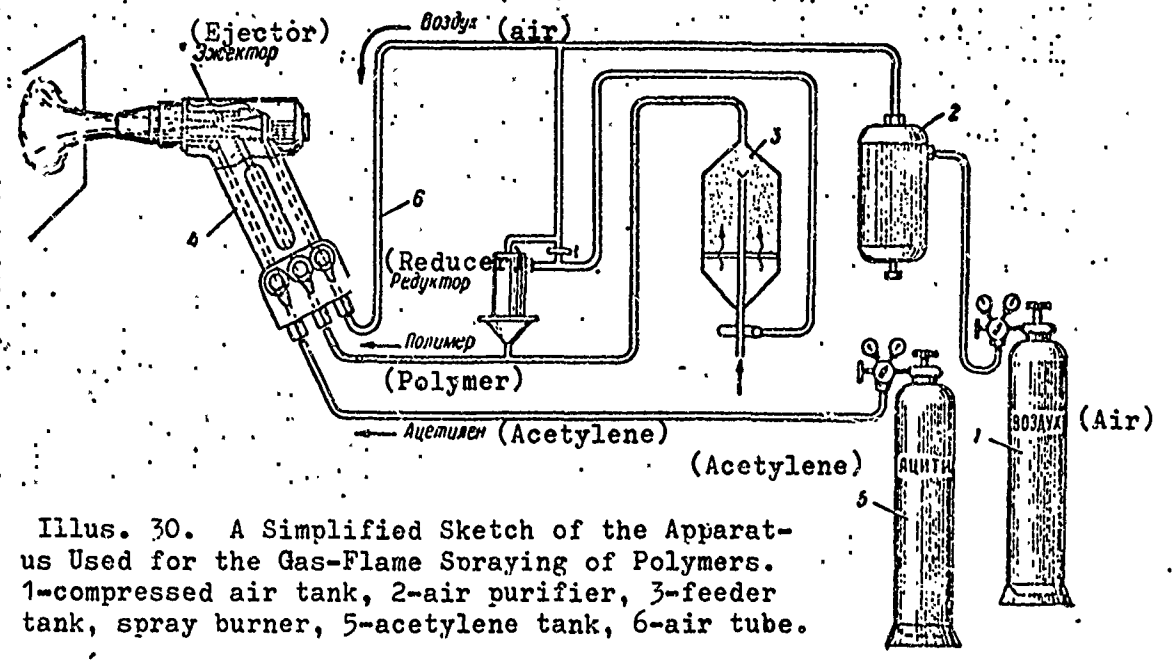

Illus. 30. A Simplified Sketch of the Apparatus Used for the Gas-Flame Spraying of Polymers. 1-compressed air tank, 2-air purifier, 3-feeder tank, spray burner, 5-acetylene tank, 6-air tube.

The working parts of cultivators (plows, etc.) are being covered with polymer by means of gas-flame spraying with the help of the Engineers Corps. Soil will not stick to the blades of the cultivators if their surface is covered with a 100 mic. thick layer of "capron."

The apparatus UPN-4L, made in our factories, is a gas-flame sprayer which sprays 2.5 kg. of polymer in an hour. Using a cylindrical nozzle through a single opening a strip 15-20 mm. is sprayed. Using a flat nozzle a strip 65-70 mm is covered. The feeder tank holds 3.25 liters.

Gas-flame spraying is distinguished by its high productivity; it permits the covering of articles which have complex configurations. A disadvantage of this technique is the burning of the polymer (thermal oxidation) by prolonged heating and the resulting poisonous gases which are released by the burning. As a result of this destruction the strength of the covering is sharply decreased. To avoid this the article which is sprayed to melt the polymer is heated. The most convenient method is to heat the article in an oven to a temperature 50° higher than the yield temperature of the polymer. Articles which are to be turned on a lathe are first heated, then quickly placed on the lathe, spun and sprayed with the polymer which

melts and adheres to the article, leaving a covering of equal thickness and of high quality.

b. Vortex technique. In the vortex technique, the pre-heated piece is lowered into a vessel containing "boiling" polymer powder. Particles of polymer come into contact with the surface of the hot piece and melt, strongly adhering to the surface. The vortex technique is finding wider and wider use because of the simplicity of the equipment needed and the high quality of the covering. Small pieces which have been carefully degreased are covered using this method. The apparatus used for this technique is shown in illustration 31. The part, 1, is suspended in a chamber, 2, on the bottom of which lies the dry polymer powder, 3; the polymer powder particles range in size from 100-350 mic. The compressed air is passed through the air cleaner where it is dried and purified. It then passes through a regulator, 4, into the chamber, 2, through holes in the chamber bottom. The compressed air lifts the polymer dust surrounding the part, 1, with "boiling" polymer. The particles evenly accumulate on the hot surface of the part and melt, leaving a hard film. The process takes about 2-14 seconds. Then the part is removed and put into an oven so that the particles will melt evenly and the part cool slowly. To prevent burning (oxidation) the chamber is filled with an inactive gas (nitrogen) instead of with air. The thickness of the covering is determined by the kind of polymer, the time the part is suspended in the chamber, and the surface temperature of the part. To stop the particle from cooling the chamber is surrounded by a thermostatic sleeve which contains a circulating liquid kept at a constant temperature.

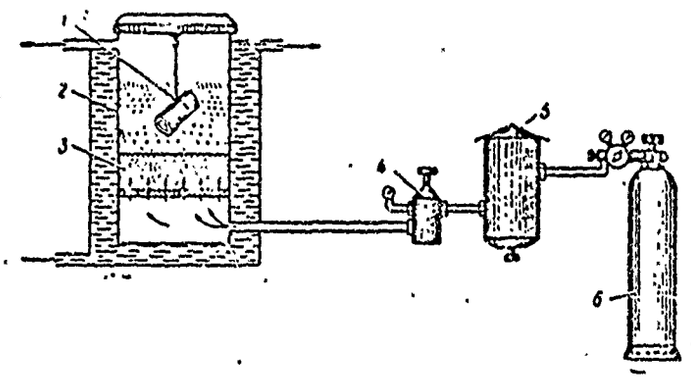

Illus. 31. Sketch of the Apparatus Used for the Vortex Spraying of Polymers: 1-part; 2-chamber; 3-polymer powder; 4-regulator; 5-air cleaner; 6-compressed air tank.

The thickness of the covering is measured with magnetic and electromagnetic micrometers. A less productive method is the measuring of the dimensions of the article before and after spraying with a caliper.

The temperature to which polyethylene should be heated for spraying of high density film should not exceed 300°; for polyamides - 280°; for polyvinylbutyral - 290°C. Parts meant to have decorative-protecting coverings should be heated to 350°-380°C.

To achieve a decorative-protective covering using the vortex technique, the Kalinin Car Factory uses polyvinylbutyral mixed with titanium oxide and coloring substances.

For example, a light-green colored covering is achieved through the use of the following mixture: (by weight), 97.5% polyvinylbutyral, 2.47% titanium oxide, and approximately 0.03% green pigment. With the addition instead of the pigment of 9% bauxite the mixture takes on a red-brown color. Depending on the amount of blue coloring added, the covering can be orange, red, or violet. Compared to the covering with chrome polymer spraying decreases the labor needed by ten times.

A disadvantage of the vortex technique is the impossibility of obtaining an even covering of polymer on foil and on articles with sharp edges because of the tendency of the polymer film to creep from sharp edges. These uncovered areas must be protected.

c. Vibration technique. In this technique, the polymer powder is shaken by means of a electromagnetic or pneumatic vibrator. This method is used in those cases where the allowing of oxygen into the covering chamber could cause difficulties.

The previously degreased and heated part is fastened inside the chamber with the dry polymer powder. The chamber is vibrated mechanically or electromagnetically and the powder begins to "boil." At the bottom of the chamber is an electrovibrating membrane. When the electromagnet is switched on, the membrane, chamber and polymer powder begin to vibrate. The polymer powder comes into contact with the hot surface of the part, melts, and adheres. The vibration technique is used for the application of thin coverings.

d. Vibro-vortex technique. The department of technical mechanics in the AN BSSR (Academy of Sciences, BSSR) has worked out the vibro-vortex technique which combines the vibration technique with the vortex method. The vibro-vortex apparatus (UVN) has been exhibited at the VDNX USSR. A sketch of the apparatus is given in illustration 32. It consists of the apparatus 1 in which the covering is applied and the control panel which regulates the temperature and controls the process. The article is fastened in the apparatus; the apparatus is sealed. Before being placed in the apparatus, the article is carefully degreased and heated to the correct temperature. The polymer powder comes in contact with it, melts and adheres.

The vibro-vortex technique produces coverings of very high quality. It covers all extremities of the part, very evenly, and the thickness of the covering can reach 0.5 mm. In addition, the components of the compound do not separate.

The apparatus has several attachments for the increasing of its capacity. These attachments permit the covering of the inside portions of cylinders, as well as housings which are larger than the apparatus.

The high productivity of this process makes possible the automation of polymer spraying.

e. Suspension technique. Fluoroplast coatings are applied using this technique. The suspension is made from fluoroplast powder and organic solutions. The suspension is applied with a sprayer or a brush onto the surface of the part to be coated. In the process of drying in ovens at temperatures of 120-150°C, the solution evaporates and a thin layer of polymer is left on the surface of the part. At the conclusion of the operation, the film is melted in the ovens at a temperature of 260-270°C. To make thicker coatings the process is repeated several times.

For the application of thin polymer coatings electrical fields can be used.

Adhesive Compounds, Used in the Repair of Armored Materiél

An analysis of the damages and failures of armored materiél during the Second World War shows that a significant percent of those machines damaged were cracked. When the machines were used during the winter, motor blocks, crankcases, gear boxes, water pump bodies, and other units were often damaged by cracks. Many of these parts with cracks were welded, and in some cases they were replaced with new parts. At present the attitude toward the repair of parts with cracks has been changed by the appearance of various polymer adhesive compounds which adhere very strongly and form exceedingly strong joints. Repair units can depend on these adhesive compounds for the gluing of metals and plastics, metals with wood, glass and plastic. The strength of the glued joint is so high that these glues can be used in the place of rivets and bolts.

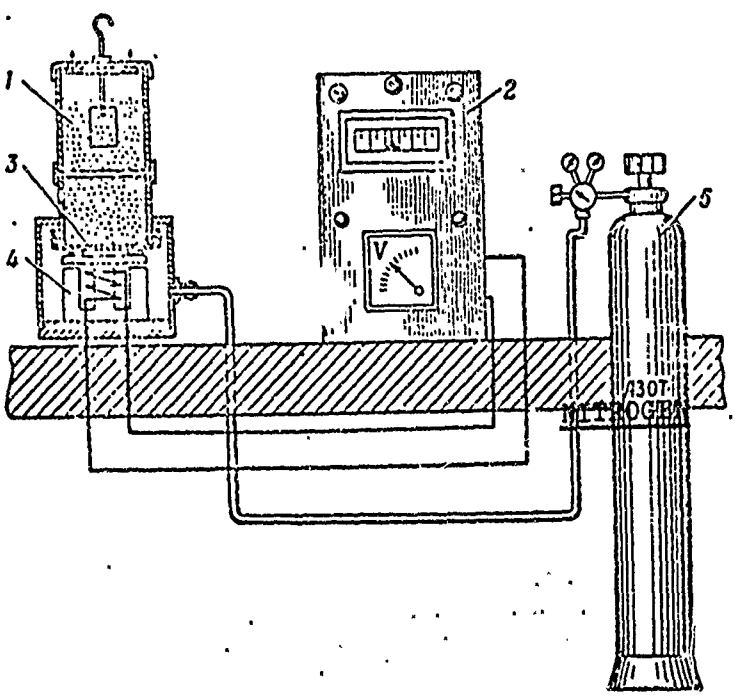

Illus. 32. Apparatus Used for the Vibro-vortex Spraying of Polymers: 1-chamber, 2-instrument panel, 3-porous bottom, 4-electromagnetic vibrator, 5-compressed gas tank.

These adhesive compounds make possible the increasing of productivity of those working in the field and shorten the time the machines being repaired must sit idle. Together with this must be mentioned the significant decreasing of the cost of the repair work. The glues can be mixed right where the work is being done, if a small repair kit, containing measuring glasses, a porcelain crucible, portland-cement - brand 500, and synthetic resins with hardener are available, along with metal filings and glasscloth.

The epoxide resins, EhD-5, EhD-6, EhD-40, are widely used in repair work. Dibutyl phthalate is used as a softening agent; this yellow liquid is used to increase the plasticity and specific impact strength of the adhesive compound. To accelerate the hardening process the hardener polyethylenepolyamine is added to the compound. To the adhesive compounds are added fillers such as metal filings, fiberglass, glass cloth and other materials.

The gluing takes place in the following sequence. Holes are drilled at the ends of the crack. The edges of the crack are prepared as if for welding. The areas which are to be glued are degreased with gasoline or acetone, after which the glue is applied onto the edges of the crack with a brush or sprayer. Often a patch made of glass cloth impregnated with epoxide resin or other adhesive compound is laid over the crack for reinforcement. Next the patch is flattened and pressed with a roller. The adhesive compound hardens in a day at room temperature, and hardens in an hour in a temperature of 60°C. Clearly, that time is not available in the field. Therefore to accelerate the hardening a solution of dimethylaniline in methylmetacrylate is added to the compound. With this addition the adhesive compound hardens in several minutes.

The choice of adhesive compound is determined by the nature of the material which is to be glued. For the repair of cracks in steel or iron parts for every 100 parts by weight of resin and 20 parts softening agent are used 100 parts metal filings (filler). For the gluing of aluminum parts, portland-cement or aluminum powder (100 parts by weight) is used as filler. The hardener is added immediately before the gluing of the part. The adhesive compounds are toxic; therefore, work with them should be conducted only in special clothing, gloves, and in well-ventilated working areas.

The epoxide adhesive compounds are widely used for the repair of tanks and automobiles. Cracks are repaired, dents straightened, defects in cast parts fixed, pipes repaired, and additional parts are added, as well as other repair work done with them.

Several methods for the repair of cracks and breaks with the help of adhesive are shown in illustration 33. After the glue is mixed and the surface prepared the glue is evenly spread on the surface to be joined. Cracks in thin pieces and pieces which undergo little stress are usually sprayed with a compound in which no filler has been added, as in "a." The breaks in "b" are repaired with a metal patch laid on the adhesive. For strength above the patch several layers of glass cloth impregnated with the adhesive compound can be laid on top of the patch as in "c." Sometimes punctures in thick parts are fixed with the gluing in of a stopper as in "d." The strengthening of the glued parts is sometimes achieved by the gluing of patches onto both sides or by the use of reinforcing braces as in "e" and "f."

Along with the epoxide adhesives, good results have been obtained with carbinol glues in the repair of ebonite and plastic blocks and battery housings; these carbinol glues are made in the proportions, 100 parts by weight of carbinol to three parts benzoyl peroxide. Carbinol glue hardens in a day.

In auto repair shops lately has appeared the method of gluing linings in brake drums and of glueing clutch plates in some automobiles. The synthetic adhesive used for this purpose is VS-10T which is made from polyvinylacetol and phenol resin. The glue VS-10T is heat resistant, non-water soluble, nor soluble in acids or gasoline. The glueing in of brake linings economizes on non-ferrous metals and is accomplished in a shorter time. Linings glued in can be used until completely worn out, while linings riveted in can only be used till 50% of their thickness is worn away, because the rivets begin to rub and wear on the surface of the brake drum and pressing disks. Besides this, the frictional area of the riveted linings is 15% less than that of the glued in linings; this improves the frictional properties of the lining. The shearing strength of the joint is twice that of the riveted joint even in temperatures up to 300°C.

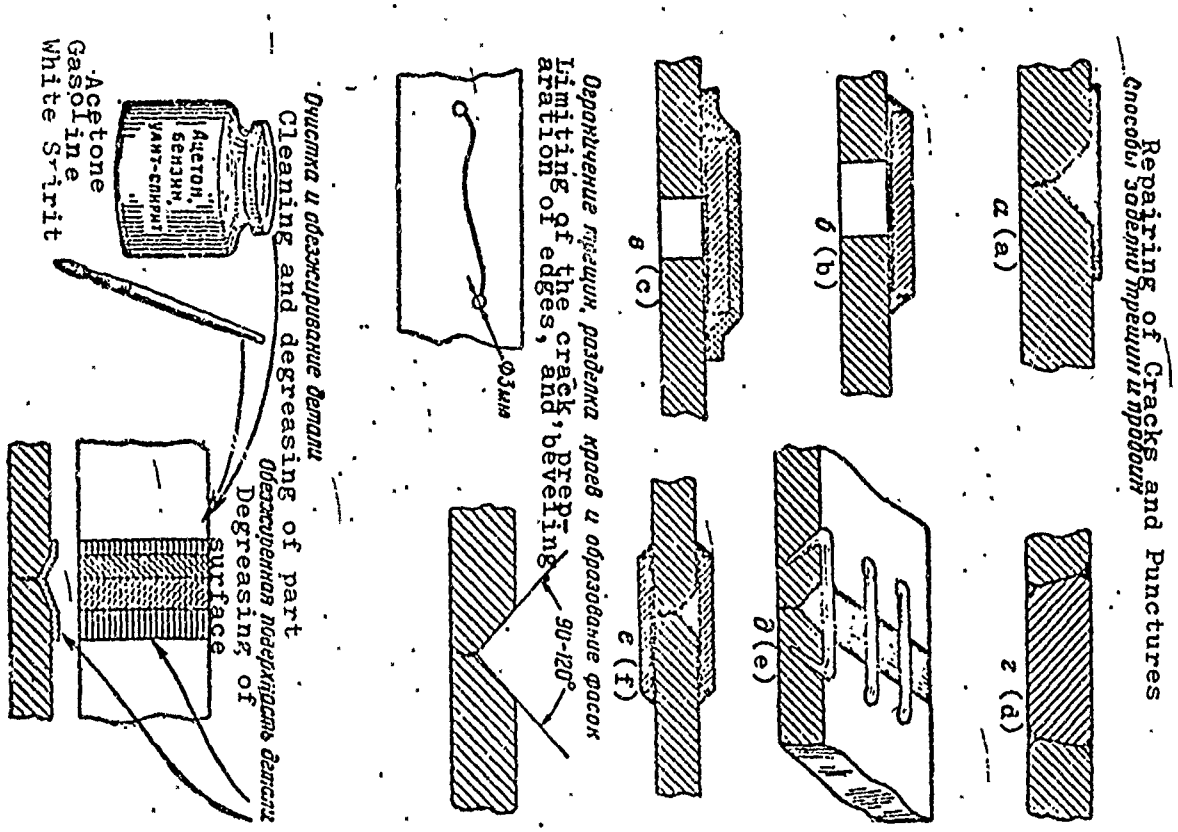

Illus. 33. Some examples of the repair of cracks with the use of adhesive compounds.

After careful cleaning and degreasing of the surface to be glued, a even layer of glue 0.2mm thick is brushed on. The glue is allowed to soak in, after which the linings are pressed into the brake drums with a special tool which holds a pressure of three kg/cm². After a half hour, as the solution evaporates from the glue, the brake linings are squeezed together with the brake drums in a pressure wheel and placed in a drying closet.

A similar method is used for the gluing of brake linings to friction discs.

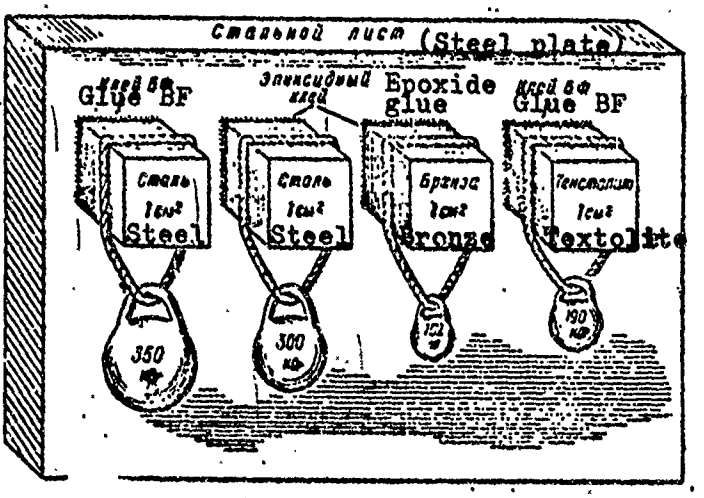

Illus. 34 Comparative Strength of Several Adhesive Compounds.

The Scientific Research Institute for Plastics has developed a large number of adhesive compounds with various purposes. The number of known compounds based on polymers has reached several dozen. There are glues - for example, RAF-50 - which do not lose their properties even in temperatures as high as 300°C. For the gluing of polyvinylchloride to metals the glues, PEhD, PFEhD, and PH-Eh, are recommended. These glues contain polyvinylchloride, epoxide, and other resins. Before use 10% hardener is added.

The strength of the adhesive compounds depends on the nature of the materials being glued and on the composition of the adhesive. The numerical shearing strength limits of several adhesive bonds is given in illustration 34. Thus, the strongest bond is between the same kind of metal joined with BF glue; using the same glue the bond between steel and textolite is only half as strong.

The Welding of Plastics

In machine construction, welding is the most used way of joining two metals. The melting temperature of steel is higher than 1000°C; thus the parts which are to be welded are heated with extremely hot heat sources;

for example, electric arcs or gas torches. The welding can be done in different ways. With the appearance of plastics in armored materiél, their welding has taken on a great significance. Only the welding of thermoplasts is easy. Thermo-hardening plastics are usually joined with glue; occasionally they are welded with high-frequency or ultrasonic equipment. Plastics are not heated for welding above 400°C. Therefore the welding equipment is distinguished by its simplicity and low cost. It is possible to weld any plastic part. Nevertheless, the overheating of the plastic for the welding causes the plastic to decompose. Under-heating results in a low quality welded joint. Thus, the welding has to be done quickly but with a careful control of the temperature: Viniplasts and polymethylmetacrylates should be welded with a temperature between 200-250°C, while polyvinylchloride compounds and polyethylene should be welded between 180-200°C.

We shall take a short look at several methods for the welding of plastics which are shown in illustration 35.

a. Hot gas welding. This technique of welding is widely used. It is used especially often in repair work, coating with polymer films, and for the lining of articles with plastics. The process of welding plastics with hot gases is very similar to that of metal welding; the equipment is similar as well as are the techniques. The principle of the welding is the heating of the areas of the plastics which are to be welded with hot air (heated in a gas flame or electrical torch). The heated areas are easily joined and then pressed together with a special roller.

A high quality bond is obtained through welding with the electrically heated hot air nozzle (illustration 35, a). Inside the nozzle 1 is the coil 2, which is heated by electric current. The air from the compressed air tank 3 is blown through the coil which heats the air to the temperature necessary to soften the plastic. The hot air stream is directed along the prepared area of the plastic which is to be welded, and the plastic is heated to a plastic state in which it is easily joined with the help of a little pressure. Occasionally when large thick sheets of plastic are to be welded, the joint is primed with a welding stick 4 made of the same plastic. As in metal welding the preparation of the surfaces which are to be welded is very important. These surfaces have to be degreased and scored. For the welding of thick plates, they are chamfered. The welded joint is packed with a roller 5.

b. Friction welding. The welding of solids of revolution (tubes, rods, and other shapes) can be done on a lathe utilizing the heat caused by the friction between two articles spinning against each other, (illustration 35, b). Part 6 is attached to the spindle of the lathe while part 7 is attached to the stock. By means of a special attachment, a clamp, part 7 can be kept immobile or freed to revolve with part 6 which will be pressed against it. The lathe is switched on and the spindle turns the face of part 6 against part 7 which is held immobile. When the heat from the friction is high enough, part 7 is freed to revolve with part 6 to which it is now welded, and as the parts spin together they cool.

c. Ultrasonic welding. This new form of welding consists of the changing of ultrasonic vibrations into heat energy and thus heating the surface of plastics which are to be welded. It is assumed that the welded surfaces

are in such close contact that the mutual diffusion of the macromolecules will cause a strong bond between the welded surfaces. The high quality of the weld, the possibility of welding in difficult to reach places, the high productivity of the process, the absence of marks left by instruments, the possibility of welding under water, and the retaining of the transparency of the plastics in the area of the weld, and other advantages all guarantee a great future for this method.

9 Зак. 662

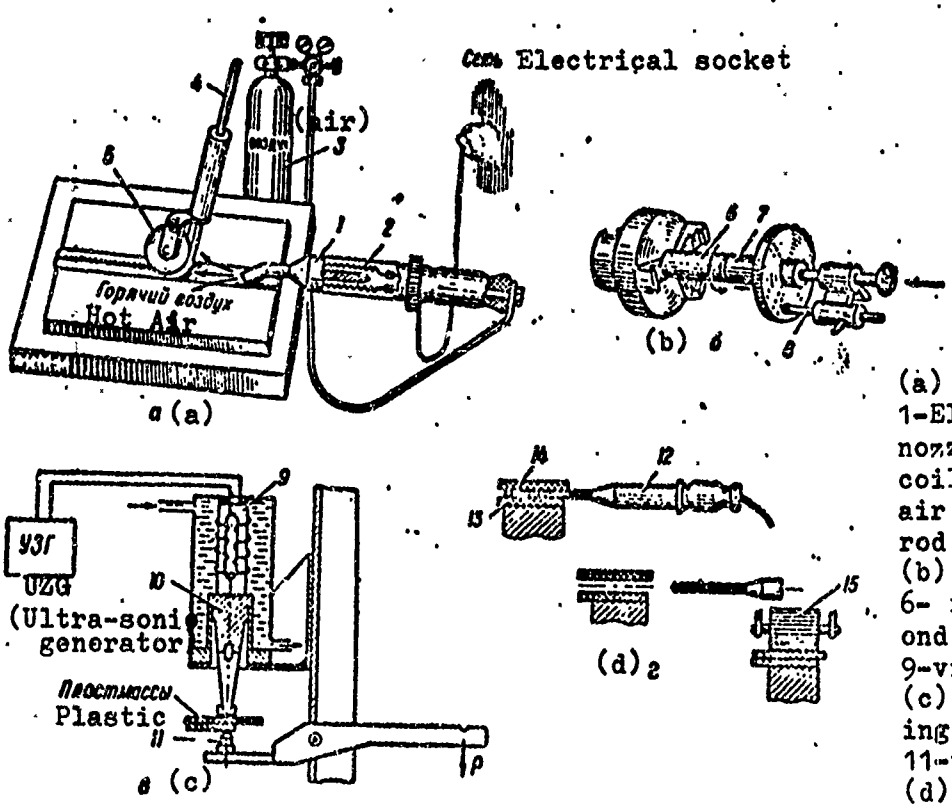

(a) Hot Gas Welding 1-Electridal heat nozzle; 2-electric coil; 3-compressed air tank; 4-welding rod; 5-roller; (b) Friction welding 6- first part; 7-second part; 8-clamp; 9-vibrator; (c) ultrasonic welding; 10-wave guide; 11-plastic holder; (d) Thermal contact welding; 12-heating element; 13-,14-plastic sheets; 15-roller.

Illus. 35 Several Methods of Plastic Welding

A second electrode is not necessary for ultra-sonic welding; therefore, the bottom part to be welded can be any thickness. The conditions of the welding guarantee a minimal amount of heat which is important in the applying of high-quality oriented films. It is interesting that the surfaces do not need to be cleaned before being welded because they are cleaned automatically during the welding.

A sketch of the ultra-sonic welding apparatus is given in illustration 35, (b). The vibrator (9) and the waveguide (10) are attached to the upper part of the apparatus. At the bottom is the holder for the plastic to be welded (11). Several kinds of apparatus for the ultra-sonic welding of plastics are being produced. All are supplied with the magnetostriction converter, PMS-15A. The welding apparatus UZAP-2 allows the beforehand

programming of automatic pressing together of the parts and of time during which they undergo the welding. The area of the weld is equal to 10 cm^2, while the diameter of the welded parts can vary between 30 to 120 mm. The welding apparatus UZAP-3 which has a working frequency of 20 khz works with the ultra-sonic generator UZG-10U. It is meant for the welding of parts made with polyvinylchloride, polyamides, polystyrene, and polymethylmetacrylates. The squeezing pressure for the welding of external joints can be varied between 12-50 kg. The dimensions for articles to be welded are 85X26X2 mm. The welding time for articles of such size is two seconds. The apparatus UZAP-4 is made for the ultra-sonic welding of plastic pump rotors. The dimensions of these plastic welded articles are : diameter 65-95mm; height 20-52mm; and thickness 6-20mm. The welding time is 2 seconds.

Of all the methods high-frequency welding is the most efficient. It is between 5-10 times more efficient than the other methods of welding plastics. The strength of the weld is equal to the strength of the material. The areas of the plastic which are to be welded are connected to a high-frequency generator with frequencies between 75-100 Mhz. Heat is created as a result of the dielectric loss in the welded areas, and this heat is sufficient to raise the temperature of the parts to the welding temperature. The parts are joined with a slight pressure. Plastics such as polyethylene and polystyrene which have a small dielectric phase loss angle are normally not welded with this method.

d. Thermal contact welding. This is probably the simplest method of welding. The heating of the plastics, which are usually rather thin, is accomplished simply by putting them in contact with a heating instrument; for example, electric irons, soldering irons, hot rollers, heating plates, etc. After heating and pressing together the parts which are to be rolled it is necessary for the strength of the weld that they be rolled.

A sketch of the welding of thin sheets of plastic is shown in illustration 35, (d), in which the heating element, 12, is placed between two sheets of plastic, 13 and 14. After being heated and having the heating element removed, the sheets are packed with roller 15. Polyethylene, polypropylene, polyamides, and polymethylmetacrylates are welded without using primer material. Welding rods are used for the welding of articles made of viniplast, fluoroplasts, and other materials with limited plasticity.

The Role of Plastics in the Fuel Supply Corps

The mission of the Fuel Supply Corps is the supplying of fuel and lubricants on time and in the necessary quantities to the armored forces. Speedy refueling of tanks, self-propelled artillery, armored transports, and automobiles is of utmost importance for the Fuel Supply Service. The fueling of military vehicles in field conditions is organized, as a rule, in rest areas and areas set aside for the inspection and servicing of materiél. For this the POL depots must be mobile; they must be able to quickly break camp and move into the assigned region and be set up again.

In the last war the military POL supplies were stored in metal tanks, which caused well known difficulties during relocations. The transport of unfilled tanks and containers demanded approximately the same number of vehicles as the transport of filled tanks. The new use of plastic in the

Fuel Supply Service has made possible the lightening of the containers and tanks. Containers based on a special brand of synthetic rubber, capron, polyvinylchloride, and other polymers are replacing the metal containers. Extremely strong tanks are made multi-layered. The insides of the fuel tanks are coated with nitrile rubber which is not dissolved by gasoline. The outer layer of the tanks is made from polyamide fiber ("anide") which is very strong and permits the transport of the tanks over great distances. A polyamide, gas-impermeable film is laid between the inside and outside layers of the tanks; this film prevents the penetration (diffusion) of the fuel through the walls of the tank. The soft, elastic tanks are easily stored, and they weigh little. It is calculated that to transport plastic POL tanks which are unfilled but have a capacity of 500 m^3, two vehicles are needed, while for the transport of metal containers with the same capacity, no less than 50 vehicles are needed.

Soft, elastic tanks have been made in West Germany for the storing of lubricants. In England various containers for the transport of POL supplies are manufactured. POL supplies are transported by railroad and water transport in plastic containers with capacities 14,440, 24,700, 38,000 liters. The normal appearance of english plastic tanks is shown in illustration 36.

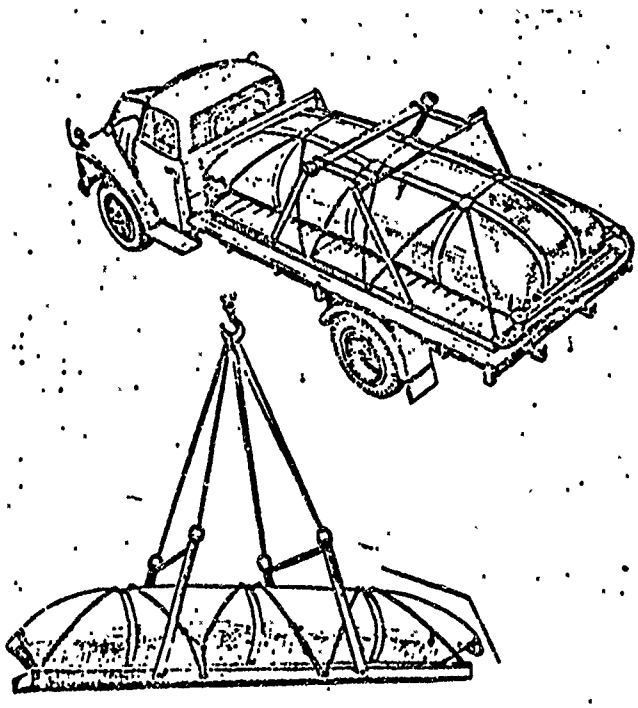

Рис. 36. Пластмассовые резервуары для горючего

Illus. 36 Plastic Fuel Tanks

The role of pipeline has grown sharply under the modern tempo of military action. Pipeline transport is usable for the supplying of troops with fuel even in the field. Still found in the stores of pipeline laying units are metal pipes the laying of which goes comparatively slowly. Lately, because of the accelerated growth of the chemical industry, the possibility

of replacing steel pipe with plastic pipe has appeared; the plastic pipes are lighter and cheaper than steel and they can be laid with a speed of 2-3 km/hr. A running meter of steel pipe with an internal diameter of 10 cm weighs 11 kg and costs 26 rubles to manufacture. A polyethylene pipe of the same dimensions weighs only 1.8 kg and costs only 18 rubles to manufacture. Pipe made of viniplast is still expensive, though it is also lighter than steel pipe. Plastic pipes do not corrode, their service life is longer and their stretching strength is in a number of cases equal to that of steel pipe. Plastic pipe can be used in temperatures between -50-+70°C without losing their elasticity. The pressure loss in plastic pipe is 40% less than that in steel pipe. Pipe made of glass-plastic is very strong. Pipe made of polyethylene and viniplast is usually made by extrusion. Machines have been made and are working now which make the pipe, dig the trenches, and lay the pipe. POL tanks and containers can be repaired with epoxide resins and various glues. Often used is the resin EhD-6 with the softening agent dibutylphthalate and filler, iron powder or cement. For 10 gm of epoxide resin heated to 60°C, two grams of dibutylphthalate are needed. Next 17 gm of iron powder is added. Immediately before the use of the adhesive, two grams of polyethylenepolyamine is added. This adhesive hardens in a half hour.

The use of epoxide resins for the repair of POL containers has an indisputable advantage - no work with an open flame is needed.

The elastic, soft tanks can also be repaired with adhesives which harden without heating.

Some pump parts and pipeline sealing rings are being made now out of capron and polyethylene. Prolonged use of pumps and fuelers is impossible without the use of plastics. This is especially important for the pumping of chemically aggressive liquids (alkali and concentrated acids). More and more often porous fluoroplasts are being used in the place of gauze strainers; they purify to diameters between five and twenty-five microns. Polyvinylchloride tubing work well with aggressive liquids. Pressure tubing made of fabric and synthetic rubber withstand twice the pressure as do usual tubing. Capron with cotton fabric impregnated with carboxylated latex makes the best purifying medium of mechanical impurities for fuels. The replacement of steel alloys with glass-textolites lowers the cost of pumping equipment by five times.

Plastic coatings reliably protect metal pipe from corrosion. Polyvinylbutyral and cresol-formaldehyde resins are added to enamels which are used to coat the insides of containers and pipe.

In conclusion, we point out that low-molecular polyisobutylene can be an excellent additive for lubricating oils. Lubricants with this additive have optimal temperature-viscosity characteristics. The service life of motors and machines are lengthened with their use and the quality of use is also improved.

BIBLIOGRAPHY

Losev, I. P., Trostyanskaya, E. B., Khimiya sinteticheskikh polimerov, [The Chemistry of Synthetic Polymers], Goskhimizdat Press, 1960.

Kargin, V. A., Slonimskij, G. L., Kratkie ocherki po fiziko-khimii polimerov, [Short Notes on the Physical-Chemistry of Polymers], MGU-izdat Press, 1960.

Zarubezhnye promyshlennye polimernye materialy i ikh komponenty, [Foreign Industrial Polymer Materials and their Components], USSR Academy of Sciences Press, Moscow, 1963.

Suslov, N. I., et al, Nemetallicheskie materialy (Spravochnik), [Non-metallic Materials (Handbook)], Mashgiz Press, Moscow-Sverdlovsk, 1962.

Andrianov, K. A., Vysokomolekulyarnye soedineniya dlya ehlectricheskoj isolyatsii, [High-molecular Compounds for Electrical Insulation], Gosehnergoizdat Press, Moscow-Leningrad, 1961.

Losev, B. I., Monina, M. L., "Conquerors of Metals," Znanie, 1963.

"Exhibit prospectus," VDNKh USSR.

"Materiél and Armament; the Rear and Supplying of the Armed Forces," Voenno-meditsinskij Zhurnal, No. 1-12, 1962-1964.

Topchiev, A. V., Krentselx B. A., Polyolefiny-novye sinteticheskie materialy, [Polyolefins-New Synthetic Materials], USSR Academy of Sciences Press, Moscow, 1958.

Bratsikhin, E. A., Tekhnologiya plasticheskikh mass, [Technology of Plastics] Goskhimizdat Press, 1963.

Oksenxtevich, A. E., Leonicheva, S. K., Konstruirovanie plastmassovykh kuzovov avtomobilej, [The Construction of Plastic Automobile Bodies], TsINTIAM Press, Moscow, 1964.

Katalogi na zapasnye chasti otechestvennykh avtomobilej, [Catalog of Spare Parts for Native Automobiles]

Novye materialy v tekhnike (Sbornik), [New Materials in Technology (Manual)] Khimiya Press, Moscow, 1964.

"Express Information" Vsesoyuznyj institut nauchnoj i tekhnicheskoj informatsii, 1960-1964.

Pavlyuchuk, A. I., et al., Sinteticheskie materialy v toplivnoj apparature porshnevykh dvigatelej, [Synthetic Materials in Fueling Units of Piston Engines], TsBTI TsNIITA Press, Moscow, 1961.

Avtomobili SSSR. Katalog-spravochnik, [Automobiles of the USSR. Catalog-Manual], TsINTIAM Press, Moscow, 1963.