AD

TECHNICAL REPORT

WVT-7205

APPLICATION OF FILAMENT WINDING TO CANNON AND CANNON COMPONENTS
PART I: STEEL FILAMENT COMPOSITES

AD 741819

D D C
RECEIVED
MAY 16 1972
C

APRIL 1972

Reproduced by
NATIONAL TECHNICAL
INFORMATION SERVICE
Springfield, Va 22151

BENÉT WEAPONS LABORATORY

WATERVLIET ARSENAL

Watervliet, New York

AMCMS No. 3297.16.6681

105

APPROVED FOR PUBLIC RELEASE; DISTRIBUTION UNLIMITED.

Unclassified

Security Classification

DOCUMENT CONTROL DATA - R & D

(Security classification of title, body of abstract and indexing annotation must be entered when the overall report is classified)

1. ORIGINATING ACTIVITY (Corporate author)
Watervliet Arsenal
Watervliet, N.Y. 12189

2a. REPORT SECURITY CLASSIFICATION
Unclassified

2b. GROUP

3. REPORT TITLE
APPLICATION OF FILAMENT WINDING TO CANNON AND CANNON COMPONENTS
PART I: STEEL FILAMENT COMPOSITES

4. DESCRIPTIVE NOTES (Type of report and inclusive dates)
Technical Report

5. AUTHOR(S) (First name, middle initial, last name)
Robert L. Cullinan
Giuliano D'Andrea
Martin S. Ferguson

6. REPORT DATE
April 1972

7a. TOTAL NO. OF PAGES
103

7b. NO. OF REFS
18

8a. CONTRACT OR GRANT NO.
AMCMS No. 3297.16.6681

b. PROJECT NO.

c.

d.

9a. ORIGINATOR'S REPORT NUMBER(S)
WVT-7205

9b. OTHER REPORT NO(S) (Any other numbers that may be assigned this report)

10. DISTRIBUTION STATEMENT
Approved for public release; distribution unlimited.

11. SUPPLEMENTARY NOTES

12. SPONSORING MILITARY ACTIVITY
U.S. Army Weapons Command

13. ABSTRACT

The feasibility of utilizing high strength steel wire filaments for filament wound composites has been established from both a design and fabrication aspect. Feasibility was established through the design, fabrication and burst testing of numerous cylinders made of steel filament/epoxy jackets with fiberglass, titanium and steel liners

Although a high density filament was utilized, its extremely high strength and high composite efficiency resulted in composite cylinders which showed >50% weight savings over gun steel cylinders designed to the same burst strength.

This study resulted in the fabrication of a composite 106mm R.R. gun tube made of 0.100" rifled steel liner and a steel filament/epoxy jacket which was proof fired with no deleterious effects.

Details of illustrations in this document may be better studied on microfiche

DD FORM 1 NOV 65 1473 REPLACES DD FORM 1473, 1 JAN 64, WHICH IS OBSOLETE FOR ARMY USE.

Unclassified

Security Classification

Unclassified
Security Classification

14. KEY WORDS	LINK A ROLE	LINK A WT	LINK B ROLE	LINK B WT	LINK C ROLE	LINK C WT
Filament Winding						
Continuous Filament Composites						
Steel Wire Filaments						
Pressure Testing						
Netting Analysis						
Composite Gun Tube						
Recoilless Rifle, 106MM						
Reinforced Plastics						
Epoxy Resins						
Guns (Ordnance)						
Fabrication						
NOL Rings						
Linings						
Composite Material						
Experimental Design						
Epoxy Laminates						
Pressurization						

Unclassified
Security Classification

AD

TECHNICAL REPORT

WVT-7205

APPLICATION OF FILAMENT WINDING TO CANNON AND CANNON COMPONENTS
PART I: STEEL FILAMENT COMPOSITES

BY

ROBERT L. CULLINAN

GIULIANO D'ANDREA

AND

MARTIN S. FERGUSON

APRIL 1972

BENÉT WEAPONS LABORATORY

WATERVLIET ARSENAL

Watervliet, New York

AMCMS No. 3297.16.6681

APPROVED FOR PUBLIC RELEASE; DISTRIBUTION UNLIMITED.

APPLICATION OF FILAMENT WINDING TO CANNON & CANNON COMPONENTS

PART I: STEEL FILAMENT COMPOSITES

ABSTRACT

The feasibility of utilizing high strength steel wire filaments for filament wound composites has been established from both a design and fabrication aspect. Feasibility was established through the design, fabrication and burst testing of numerous cylinders made of steel filament/epoxy jackets with fiberglass, titanium and steel liners.

Although a high density filament was utilized, its extremely high strength and high composite efficiency resulted in composite cylinders which showed >50% weight savings over gun steel cylinders designed to the same burst strength.

This study resulted in the fabrication of a composite 106mm R.R. gun tube made of 0.100" rifled steel liner and a steel filament/epoxy jacket which was proof fired with no deleterious effects.

Cross-Reference Data

Filament Winding

Continuous Filament Composites

Steel Wire Filaments

Pressure Testing

Netting Analysis

Composite Gun Tube

Recoilless Rifle, 106MM

Reinforced Plastics

Epoxy Resins

Guns (Ordnance)

Fabrication

NOL Rings

Linings

Composite Material

Experimental Design

Epoxy Laminates

Pressurization

TABLE OF CONTENTS

	Page
Abstract	i
Glossary	vi
Objective	1
Background	1
Approach	2
Introduction	
I General	3
II Steel Filaments	3
III Filament Winding	5
	9
Characterization	
I Material Tests	15
II Pull-Out Tests	16
III Flat Specimen Tests	17
IV NOL Ring Tests	21
	23
Fabrication and Testing	
A. Composite Test Cylinders	26
1. Fiberglass Liners	26
2. Titanium Liners	27
3. Steel Liners	39
	49
B. Composite Gun Tube	65
Conclusions	73
Appendix A	79
Appendix B	84
Appendix C	89
DD Form 1473	

LIST OF TABLES

		Page
Table I	Properties of Continuous Fibrous Reinforcements for Composite Materials	4
Table II	Minimum Tensile Strengths of Rocket Wire Vs. Wire Diameter	8
Table III	Physical and Chemical Properties of Rocket Wire	8
Table IV	Resin-Pullout Tests: 1095 Steel 1/8" Rod	19
Table V	Resin-Pullout Tests: 1065 Steel .012" Wire	19
Table VI	Resin-Pullout Tests: Titanium 1/8" Rod	20
Table VII	Burst Pressure Data: E Glass/Music Wire Filament Wound 93mm Cylinders	28
Table VIII	Burst Pressure Data: E Glass/Rocket Wire Filament Wound 60mm Cylinders	37
Table IX	Burst Pressure Data: N.S. 355 Rocket Wire Cylinders with Titanium Liners	42
Table X	106mm Composite Test Cylinder - Strain Vs. Pressure Data	60
Table XI	Test Firing Data - 106mm (Stub) "Recoilless Rifle"	70

LIST OF FIGURES

1.	Prepreg Glass Filaments Helically Wound on an Aluminum Mandrel	11
2.	Overall View of a Horizontal Type Filament Winding Machine	12
3.	Schematic of One Helical Wound Circuit	13
4.	Mandrels Used in Fabricating Characterization Test Samples	22
5.	Schematics of Two Types of Filament Wound, Ring Type, Tensile Specimens	25

LIST OF FIGURES (Cont'd)

		Page
6.	Tensioning Device for Prepreg Glass Roving	31
7.	Feeding Fixture Utilized for Steel Filaments	32
8.	Sketches of Two Types of Wire Pretreatments	33
9.	Schematic of Pressurization Fixture Used for Fiberglass Liner Cylinders	35
10.	Fiberglass Liner Cylinders After Pressure Testing	36
11.	Fiberglass Liner Cylinders After Pressure Testing	36
12.	Titanium Liner Cylinder (SN-4) After Pressure Testing	43
13.	Titanium Liner Cylinder (SN-5) After Pressure Testing	44
14.	Titanium Liner Cylinder (SN-6) After Pressure Testing	45
15.	Titanium Liner Cylinder (SN-7) After Pressure Testing	46
16.	Size and Weight Comparison of Titanium Liner Composite Cylinder Vs. Gun Steel Cylinder for Two Design Pressures	48
17.	Drawing of Conventional 106mm M40A1 Gun Tube	50
18.	Dimensional Drawing of Steel Liner Test Cylinder (OCL-1)	51
19.	Schematic of End Caps Used for Winding Pressure Test Cylinders	53
20.	Four Stages of Winding the Steel Liner Cylinder	55
21.	Steel Liner Test Cylinder Before Testing with Strain Gages Attached	57
22.	Schematic of a Pressure Test Cell Used to Measure Burst Strength	58
23.	Plot of Pressure Vs. Strain (at O.D.) for OCL-1 Cylinder	62
24.	Representative Pressure-Strain Curve Illustrating the Contributions of Metallic Liner and Composite Jacket to Cylinder's Burst Strength	62
25.	Steel Liner Cylinder (OCL-1) After Pressure Testing	63

LIST OF FIGURES (Cont'd)

		Page
26.	Close-up View of the Ruptured Area on OCL-1	63
27.	Size and Weight Comparison of Steel Liner Composite Cylinder Vs. Gun Steel Cylinder Designed	64
28.	Dimensional Sketch of 106mm Stub Gun Liner	67
29.	View of Machined 106mm Stub Gun Liner Before Winding	67
30.	Two Views of 106mm Composite Stub Gun	68
31.	Schematic of 106mm Tube Showing Overall Composite Build-up	71
32.	Firing Set-up for 106mm Composite Stub Gun	72
33.	ESP and Pressure Travel Curve of 106mm M40A1 Conventional Tube Showing Expected Weight Savings When Composite Materials are Used	75
34.	Dimensional Sketch and Required Calculations for Geodesic End Dome Contour of 81mm Mandrel	83
35.	Typical Output Data from GUNTU II Computer Program	92

GLOSSARY

Accelerator - A material which when mixed with a catalyzed resin will speed up the curing time by promoting the chemical reactions between curing agent and resin.

Amines - Synthetic resins derived from reactions with ammonia; these may be primary, secondary or tertiary, depending on the number of hydrogen atoms replaced by organic radicals.

B-Stage - An intermediate curing stage in the reaction of epoxy resins. The resin in an uncured prepreg is usually in this stage.

Breaking Factor - Breaking load divided by the original width of test specimen, expressed in pounds/in.

Catalyst - (curing agent or hardner) - Reactive agent which when added to a resin causes polymerization.

Cure - To change the properties of a resin by chemical reaction; usually accompanied by the action of heat and/or curing agent with or without pressure.

Elastic Deformation - An elongation caused by an applied load under which no part of the deformation remains after removal of the load i.e. elastic deformation is reversible.

End - A strand of roving consisting of a given number of filaments gathered together; an individual thread, fiber or wire.

Epoxy Novalac - Epoxy resins made by the reaction of epichlorohydrin with a novalac resin (phenol-formaldehyde); offers better resistance to high temperatures than epoxies alone.

Epoxy Resins - Thermosetting resins based on the reactivity of the epoxide group; noted for their excellent adhesion, strength and chemical resistance when formulated into protective coatings, adhesives and structural plastics.

Gel Time - That interval of time extending from the introduction of a catalyst into a liquid resin system until the interval of a gel or "tack free" formation.

Geodesic - Shortest distance between two points on a surface.

Glass Roving - A collection or bundles of continuous glass filaments; for filament winding the bundles are generally wound as bands (20-end; 60-end) or tapes with as little twist as possible.

I.D. - Inside diameter

Impregnate - In reinforced plastics; the saturation of the reinforcement with resin.

Interlaminar Shear Strength - Maximum shear stress existing between layers of a filament wound material.

KSI - 10^3 lbs/in^2 (psi)

Laminate - To unite sheets of material by a bonding material usually with pressure and heat; a product made by so bonding.

Matrix - In composites, it's considered the continuous binder phase.

MEK - Methyl Ethyl Ketone

Mil - A unit of length equal to 1/1000 of an inch (0.001") used especially for the diameter of wire.

Monolithic - Exhibiting large uniformity.

Netting Analysis - The analysis of filament wound structures which assumes that the stresses induced in the structure are carried entirely by the filaments, and the strength of the resin is neglected; and also the filaments possess no bending or shearing stiffness, and carry only the axial tensile loads.

O.D. - Outside diameter.

Organic Resins - Any of a large class of synthetic products that are used chiefly as plastics.

Plastic Deformation - A permanent, irrecoverable deformation caused by an applied load which exceeds the elastic limit of the material.

Polyamide - A polymer in which the structural units are linked by amide of theoamide groupings.

Polymer - A long chain molecule, made up of hundreds, thousands, even tens of thousands of repeating units called monomers, which often have molecular weights running into the millions.

Polymerization - A chemical reaction resulting in the union of monomers to form large molecules.

Pre-preg - Ready to use material in which the reinforcement has been impregnated with resin and stored. The resin is partially cured (B-stage) and supplied to the fabricator who lays or winds the finished shape and completes the cure with heat and/or pressure.

Proportional Limit - The greatest stress which a material is capable of sustaining without deviation from proportionality of stress and strain (Hooke's law).

Resin - Rich - Areas within composites which are filled with resin and lack sufficient reinforcing material.

Resin - Starved - Areas of insufficient resin.

Specific Strength - Comparative engineering strength property of materials obtained by tensile strength/density; expressed in inches.

Specific Modulus - Comparative stiffness property obtained from elastic modulus/density; expressed in inches.

Static Fatigue - Failure of a part under continued static load; analogous to creep-rupture failure in metals, but often the result of aging accelerated by stress.

Stress Concentration - The magnification of the level of an applied stress in the region of notch, void or inclusion.

Stress Corrosion - Preferential attack of areas under stress caused by the interaction of the stress and corrosive environment, where the environment alone would not have caused corrosion.

Thermoset Resin - A plastic which, when cured changes into a substantially infusible and insoluble material.

Thermoplastic Resin - A plastic capable of being repeatedly softened and hardened by increase and decrease in temperature; change upon heating is essentially physical rather than chemical.

Voids - Gaseous pockets that have been trapped and cured into a composite.

Wet Winding - In filament winding, the process of impregnating the filaments with resin just prior to or upon their contact with the mandrel.

Winding Pattern - A total number of individual circuits required for a winding path to begin repeating by laying down immediately adjacent to the initial circuit.

Winding Tension - The amount of tension on the reinforcement as it makes contact with the mandrel.

OBJECTIVE

The objective of this program is to develop within the Army Weapons Command the fabrication technology and design concepts necessary for the application of filament wound, fiber reinforced composites to cannon and cannon components.

Particular emphasis being placed on the development of a lightweight, high strength composite system to be utilized in the fabrication of lightweight, multi and single-shot weapons, i.e., mortars, launchers, and recoilless rifles.

BACKGROUND

Previous work [1] in fabricating multi-shot weapons with organic composite materials has established that a metallic liner is necessary to protect the bore from the erosion damage of hot propellant gases. This same study investigated the use of a high strength fiberglass jacket over thin metallic liners to eliminate this problem. However, because of the strain incompatibility between the glass composite and the steel liners, buckling of the liner occurred upon pressurization. The yield strain of the glass jacket is almost six times that of the steel liner so that, upon internal pressurization, the thin steel liner follows the jacket out and as a result is strained into its plastic region. After pressurization, the glass jacket returns to its original state causing buckling failure of the metallic liner.

1. Eig, M., "Feasibility of Using Glass-Reinforced Plastics in the 81mm Mortar," Picatinny Arsenal Technical Reports: #3400-November 1966; #3401-February 1967.

APPROACH

Accepting the fact that a monolithic liner will provide the best erosion protection for composite gun tubes, then, there are two main approaches for eliminating the strain incompatibility problem between composite jacket and metallic liner.

a. Utilization of a Higher Modulus Composite Jacket:

By bringing the modulus of the jacket more in line with that of the liner, minimization or elimination of the strain incompatibility will result. The high strength and/or modulus values attributed to filament-wound organic composites can be attributed largely to the reinforcing filament; therefore, a higher modulus composite jacket requires the utilization of a higher modulus filament.

b. Induced Compressive Stresses and Strains Into the Liner:

This may be done to the liner before winding, through an auto-frettage process (i.e., inducing favorable residual stresses in the liner) or during fabrication by winding the filaments under tension. In the latter method, both the jacket and liner are left with residual compressive stresses. Upon pressurization, the liner must strain from a negative value, through zero, to a positive value. Since total strain equals the absolute sum of its negative and positive strains, a condition is set up in the liner whereby it could, theoretically, double its maximum strain and yet remain elastic.

INTRODUCTION

I. General

The strength properties of organic composites are directly related to the reinforcing filaments. Table I lists the physical properties of the most commercially used filaments. Extensive R&D effort and money have been spent over the last six years on graphite and boron filaments because of their high strength/density ratios. This property is extremely important in the aerospace field and, needless to say, costs money to obtain it. For instance, the aforementioned filaments' cost was about $300 to $500/lb when this project commenced. Today they still range in the $200 to $350/lb category which makes them almost prohibitive for large-scale use in ordnance items.

This study concerns itself with readily available, inexpensive, high strength, and high modulus steel filaments. The use of steel filaments as the reinforcing agent in organic composites is not entirely new. In the early 1960's the Bendix Corporation [2] investigated the possibility of utilizing high strength steel wire for the fabrication of the early Polaris composite rocket cases.

Their efforts seemed encouraging; however, the Navy at that time decided to go with fiberglass because of its more extensive use and known design criteria. Since that time very little effort has been directed toward the use of steel wire in filament-wound composites. With the advent of advanced composites, boron, graphite, and beryllium filaments have drawn most of the R&D efforts because of their admittedly high specific strength and specific modulus (Table I).

2. Werts, W.E., "Fabrication of Wire-Wound Vessels for Mortar Cases," presented at the National Aerospace Manufacturing Forum, Los Angeles Meeting S.A.E., October 1961.

TABLE I

PROPERTIES OF CONTINUOUS FIBROUS REINFORCEMENTS

Fiber Type	Fiber Material	Density LBS/IN^3	Ten. Str PSI X 10^3	Spec. Str IN X 10^6	Elas. Mod PSI X 10^6	Spec Mod IN X 10^7
Glass	E-Glass	0.092	500	5.4	10.5	11.4
	S-Glass	0.090	650	7.2	12.6	14.0
	4H-1	0.096	730	7.6	14.5	15.1
	SiO_2	0.079	850	10.8	10.5	13.3
Polycrystal-line	Al_2O_3	0.114	300	2.6	25.0	21.9
	ZrO_2	0.175	300	1.7	50.0	28.6
	Carbon-Graphite	0.057	250	4.4	40.0	70.0
	Boron Nitride	0.069	200	2.9	13.0	18.8
Multi-Phase	Boron/Tungsten	0.095	400	4.2	55.0	57.8
	Boron/SiO_2	0.085	330	3.9	53.0	62.5
	B_4C/B/W	0.095	390	4.1	62.0	65.0
	SiC/Tungsten	0.125	300	2.4	67.0	52.0
Metallic	Tungsten	0.697	580	0.8	59.0	8.5
	Molybdenum	0.369	320	0.9	52.0	14.1
	Rene 41	0.298	290	1.0	24.0	8.1
	Steel	0.280	600	2.1	29.0	10.3
	Beryllium	0.066	185	2.8	35.0	53.0

The biggest drawback to the use of steel wire, in the eyes of the aerospace investigators, is its density. This explains why steel filaments, with a density of 0.280lbs/in ^{3}, were never considered. However, from an ordnance point of view, where the chief material competitor is high strength steel, and cost becomes important because production lots per weapon can run into the millions, the investigation of steel wire composites becomes more acceptable.

This project was initiated to determine the feasibility of utilizing lighter weight steel wire composites in cannon items and, in particular, the fabrication of such items by the filament winding technique.

The following describes the "steel filaments" used and the "filament winding" technique employed.

II. Steel Filaments

The filaments utilized throughout this study were supplied by the National Standard Company, Niles, Michigan. In the early 60's, National Standard collaborated with Bendix Corporation in its Polaris rocket case work and realized that, for steel filaments to compete with fiberglass, very high strength steel would be required to make the strength-to-weight ratio comparable to fiberglass. As a result of their work, special proprietary processes were developed which allowed them to produce carbon and stainless steel wire with 20% greater tensile strengths than the presently available music wire as shown in Table II,[3].

3. National Standard Company, Technical Data Bulletin #SWT-101, March 1968.

TABLE II

MINIMUM TENSILE STRENGTHS (KSI) VS. WIRE DIAMETER*

Wire Diameter (ins.)	Standard Music Wire	Carbon Steel Rocket Wire	NS-355 Rocket Wire
0.004	439	575	500
0.006	415	540	475
0.008	390	525	450
0.010	387	495	445
0.012	377	475	435
0.015	365	440	420
0.018	356	425	415
0.020	350	415	407
0.025	341	395	397
0.030	330	385	393

* Source: National Standard Co. data

This project includes the study of both carbon steel Rocket Wire and NS-355 stainless steel Rocket Wire. Their physical and chemical properties are listed in Table III.

Remarks:

1. Carbon steel filament, if not coated, is very susceptible to corrosion. Most suppliers can provide this filament with coatings such as brass, zinc, tin, cadium, and others.
2. Stainless steel filament has a very high corrosion resistance but may be susceptible to stress corrosion.
3. Carbon steel Rocket Wire, when compared to standard music wire, shows a 15% increase in the torsional proportional limit and a 10% improvement in torsional yield point (at 0.2% offset).
4. The NS-355 stainless wire has the highest proportional limit (192 ksi), making it one of the most elastic materials available on the market.

One of the steel filament's most important characteristics besides its obvious advantage of high strength and high modulus, is its extremely high composite efficiency. The composite efficiency of steel wire is 95%[4], whereas for glass it is 58%[5]; and, for boron 70%[6].

4. Rosato, D.V. and Grove, C.S., "Filament Winding," John Wiley and Son, New York, New York, 1964, p. 180.

5. Rosato, D.V. and Grove, C.S., "Filament Winding," John Wiley and Son, New York, New York, 1964, p. 180.

6. Rosato, D.V. and Grove, C.S., "Filament Winding," John Wiley and Son, New York, New York, 1964, p. 66.

Composite efficiency is the ratio of the composites' test strength to theoretical composite strength. The steel wire ratio actually means that 95% of the filament's strength goes into high strength composites or, it also suggests: (a) no loss in strength is caused by mechanical damage

TABLE III

PHYSICAL AND CHEMICAL PROPERTIES OF ROCKET WIRE

CHEMISTRY:

	Weight (%)	
	Carbon Steel	NS-355
Elements	Rocket Wire	Rocket Wire
Carbon	0.80 - 1.00	0.10 - .18
Manganese	0.25 - 1.00	-
Nickel	-	4.0 - 5.0
Molybdenum	-	2.0 - 3.0
Chromium	-	15.0 -16.0

PHYSICAL CONSTANTS:

	Carbon Steel	NS-355
Density	Rocket Wire	Rocket Wire
LBS./IN.^{3}	.2833	.282
GMS./CC	7.841	7.805
Thermal Expansion Coefficient		
68 - 212°F	-	6.4×10^{-6} IN/IN/°F
68 - 1150°F	-	7.2×10^{-6} IN/IN/°F

from the winding operation, and (b) good bond between filament and matrix. In summary, if wires having tensile strengths of 500,000 psi are utilized, one can expect composite materials with strengths exceeding 300,000 psi and this is a major reason for investigating the feasibility of using wire in ordnance items.

III. Filament Winding

It is not within the scope of this report to explain filament winding fabrication in detail. Many informative books and technical reports have been written on this subject [7,8,9]. As a brief introduction, however, filament winding can be described as a fabrication technique for forming lightweight composite parts having high strength and/or high modulus properties. The fabrication technique is made possible by exploiting the remarkable strength and modulus properties of continuous filaments. These filaments are impregnated with a suitable organic resin system (matrix) and are then actually wound upon a form (mandrel) which corresponds in shape to the desired interior configuration of the fabricated component (Figure 1). The mandrel may be removed or disposed of after the organic resin has been cured, or it may remain an integral part of the completed structure as in the case of a gun tube liner.

This simple explanation indicates that filament winding is an ideal composite fabrication technique for cannon tubes, and other pressure vessels having suitable surfaces of revolution.

7. Rosato, D.V. and Grove, C.S., "Filament Winding," John Wiley and Son, New York, New York, 1964.

8. Shibley, A., Peritt, H., and Eig, M., "A Survey of Filament Winding," PLASTEC Report #10, Picatinny Arsenal, May 1962.

9. Newling, D.O., "Filament Winding: A Critical Survey of Materials, Processes and Applications," U.K. Atomic Energy Authority, AWRE Report No. 081/63.

The winding machine utilized throughout this study was a commercial laboratory-type winder shown in Figures 1 and 2. This horizontal-type winder has a chain driven carriage and is capable of winding pieces having a maximum diameter of 12" and an overall length of 60". It can wind in both helical (15° to 85°) and circumferential modes.

One of the greatest advantages of composite materials over homogeneous isotropic materials (such as steel) is that the directional strength ratio can be varied with the structure. This enables the designer to conceive of structures in which the material is utilized with a high degree of efficiency and results in even further weight reduction. In filament winding, this variance of directional strength is accomplished by use of both helical and hoop winding.

The winding machine may be envisaged as a lathe where the mandrel sets horizontally between centers similar to the lathe's headstock and tailstock. The filament feeding head is chain-driven and is linked to the machine's headstock through an idler gear. As the mandrel is rotated about its longitudinal axis, the feeding head traverses backwards and forwards the length of the mandrel (Figure 3).

If the Rc (ratio of rpm of mandrel drive shaft/idler sprocket) of the machine is preset at a 1:1 ratio then increasing or decreasing the size of the timing sprockets will vary the carriage traversing speed. When the helical gear drive is employed, this leads to an increase or decrease in the helical winding angle. A second gear drive changes the winding mode from helical to circumferential. In this gear drive a separate control (Zero-max) regulates the traversing speed of the carriage and thereby controls the filament spacing when circumferential windings are used.

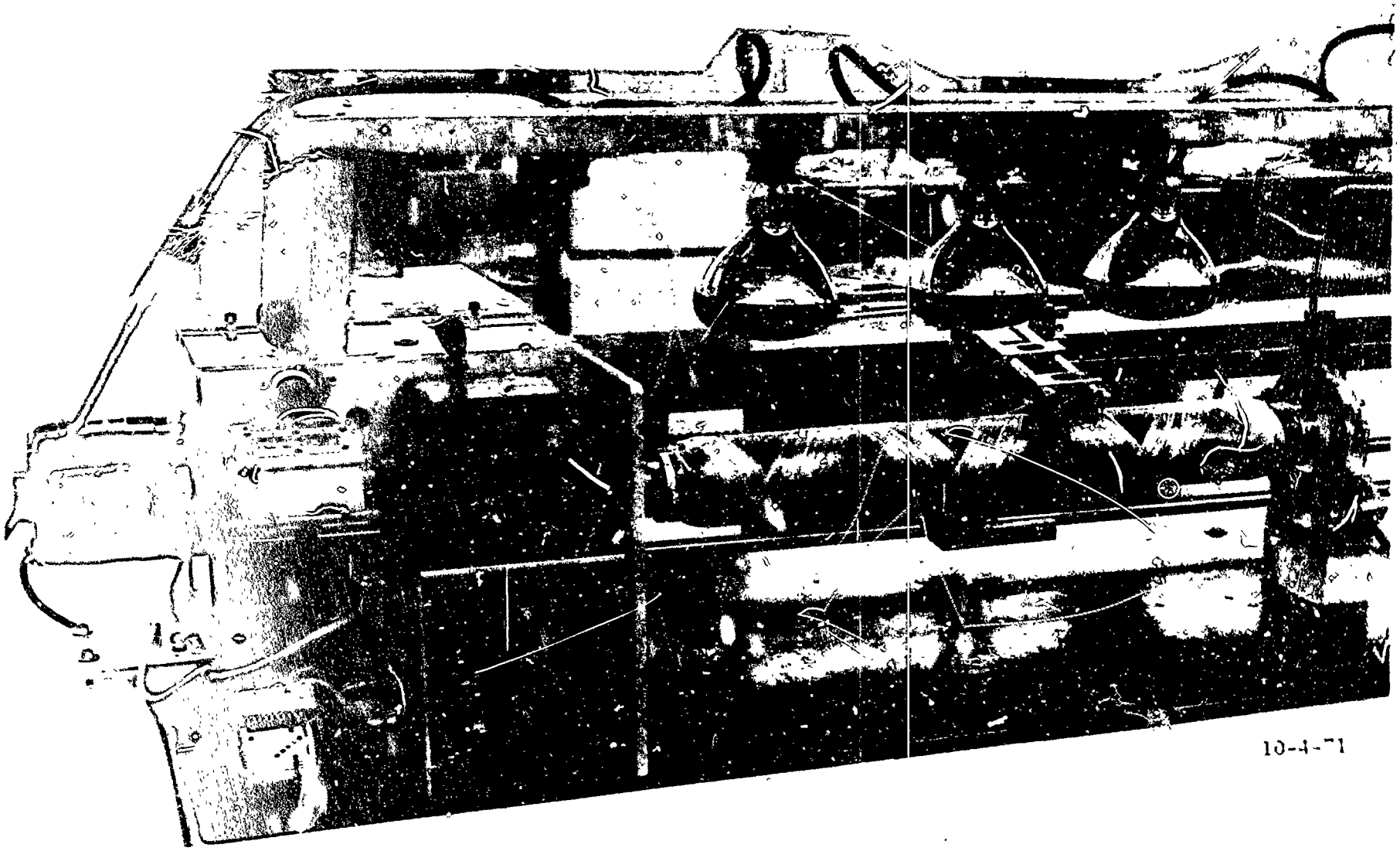

Figure 1 Prepreg Glass Filaments Helically Wound on an Aluminum Mandrel

Figure 2 Overall View of a Horizontal Type Filament Winding Machine

10-6-71

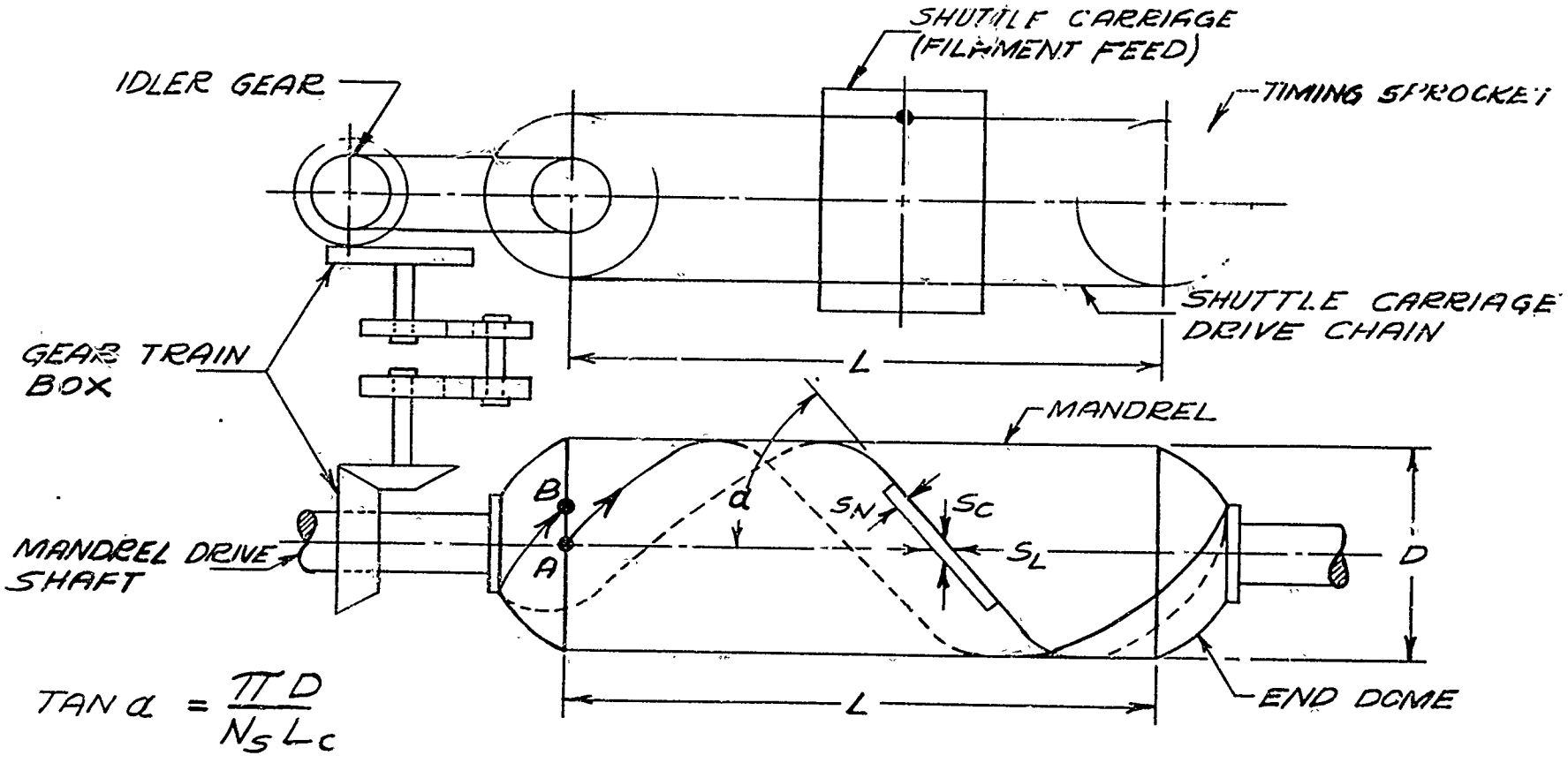

$$\tan \alpha = \frac{\pi D}{N_S L_C}$$

α = HELIX ANGLE

D = MANDREL DIAMETER

S_N = FILAMENT BAND WIDTH

S_C = CIRCUMFERENTIAL COMPONENT OF S_N

S_L = LONGITUDINAL COMPONENT OF S_N

N_S = NO. OF SPROCKET TEETH IN TIMING SPROCKET

N_C = NO. OF CARRIAGE DRIVE CHAIN LINKS

R_c = RATIO OF R.P.M. OF $\frac{\text{MANDREL DRIVE SHAFT}}{\text{IDLER SPROCKET}}$

L = LENGTH OF CYLINDRICAL PORTION, INCHES

L_C = LENGTH PER CHAIN LINK, INCHES

POINT A START OF FIRST HELICAL TRAVERSE

POINT B START OF SECOND HELICAL TRAVERSE

Figure 3 Schematic of One Helical Wound Circuit

There are basically three winding modes with any type of filament winder: circumferential, longitudinal, and helical.

1. Circumferential: Most commonly called hoop windings because here the filament is laid down essentially at 90° to the axis of the mandrel. Hoop windings are capable of resisting hoop stresses only.

2. Longitudinal: Longitudinal windings are laid down along the axis of the mandrel and are capable of resisting longitudinal stresses only. For some pressure vessels, like a gun tube, it is necessary to withstand longitudinal loads whether they be in the form of acceleration forces from firing, gun tube droop, or just from dropping of tube during handling.

It is quite apparent that with a lathe-type winder it is impossible to wind at 0° to the mandrel. Longitudinal reinforcements can be hand-laid on the mandrel any time during the winding sequence and a uni-directional fabric material of the desired reinforcement is generally used to develop this longitudinal strength.

3. Helical: When integral-end closures are required, or components themselves have slopes of more than 30°, or hand-laid longitudinal fibers become impractical, helical winding patterns are employed. The actual helix angle will depend on the relative rotating speed of the mandrel to the traversing speed of the feed.

In a thin walled, enclosed cylinder subject d to internal pressure, the hoop stress is twice the longitudinal stress. It can be shown through a netting analysis [10] that the theoretical maximum strength/weight ratio for this type of pressure vessel can be obtained at a winding angle of 54.75°.

10. Rosato, D.V. and Grove, C.S., "Filament Winding," John Wiley and Son, New York, New York, 1964, p. 193.

In this case, helical windings can replace both circumferential and longitudinal patterns. In general practice, however, most pressure vessels are a combination of circumferential along with the helical winding patterns in order to obtain better interlaminar shear strengths within the composite.

Sample calculations required to set up winder and mandrel for winding are presented in Appendix A.

CHARACTERIZATION

At the initiation of the program, the need for characterization of the Wire Reinforced Plastic (WRP) system was realized. Physical and mechanical testing of raw materials and sample lots of wire composites were performed to obtain basic data on this high strength steel reinforcement system.

Initial WRP specimens were produced from sample lots of 4 mil 1090 steel and 6 mil 1070 steel music wire supplied by National Standard Co. The vendor's specifications for these common types of wire were minimum ultimate tensile strengths of 439 and 350 ksi, respectively. Twelve mil 1065 wire was also investigated on a sample basis and was found to be too large a diameter and too low in strength for practical winding usage. Actual winding tests indicated that the 6 mil wire offered the best trade-off in tensile strength versus ease of handling in winding. After this initial sample evaluation, further work was carried out with two lots of the higher strength 6 mil Rocket Wire available from the same vendor.

These were NS-355 Stainless Steel Rocket Wire having a minimum tensile strength of 435 ksi (435 ksi tensile wire was accepted in lieu of the stated 475 ksi minimum in order to speed delivery dates), and brass-coated Carbon Steel Rocket Wire with a minimum strength of 540 ksi. These stated strengths were verified in the laboratory and results are shown under (a) and (b) of "Material Tests".

Several resin matrices were investigated to select one showing optimum cured properties and exhibiting ease of handling for winding operations. The systems considered were as follows:

1. Shell Epon 828 resin with General Mills Versamid 140 polyamide hardener in equal parts.

2. Shell Epon 828 resin (100 parts) with CIBA 906 Araldite Hardener, a low viscosity anhydride cure (80 parts), and an amine accelerator in two parts/hundred (pph) resin. Accelerators used were BDMA, DMP-30, or DMP-10.

3. A polyfunctional epoxy novalac designated as CIBA EPN1138 was used in equal parts with the above CIBA 906 with 1-4 pph accelerators as mentioned in #2 above.

I. <u>Material Tests</u>:

Specimens of 0.006" diameter Rocket Wire and the epoxy matrix were checked to verify mechanical properties.

a. Stainless steel NS-355 wire tensile tests agreed well with specification values and gave the following average data from eleven specimens taken at random from spools of the total fifty-pound lot:

Ultimate Tensile Strength:	435 ksi
Yield Strength (.2% offset):	425 ksi
% Elongation:	5.5

b. The lot of brass-coated Carbon steel wire also fell within specifications and gave the following average data for nine random samples:

Ultimate Tensile Strength:	540 ksi
Yield Strength (.2% offset):	490 ksi
% Elongation:	6.8

c. Properties of the epoxy matrix material were studied in cured sheet form. Flat plate specimens were cast using the Shell 828 - CIBA 906 - BDMA matrix material and normal cure cycle. These plates, approximately 0.1" in thickness, were cut on a milling machine to standard flat tensile specimens (ASTM #D-638) having a gage length of 1.25" and width of 0.25". Results of tensile tests using formica tabs in 14 samples are summarized below:

Ultimate Tensile Strength:	Range - 8 to 12 ksi Average - 11.5 ksi
Yield Strength (.2% offset):	Average - 10.8 ksi
% Elongation:	Average - 12

II. Pull-Out Tests:

Samples designed to measure shear resistance of resin to wire pull-out were prepared and tested. In this test [11], a 1.0" diameter matrix ring, 1/4 to 1/2" long, was cast around a single length of reinforcing material. The steel used to simulate reinforcement was 12 mil

11. Marshall, D.W., "Research on Wire-Wound Composite Materials," M.I.T. Report #R62-43, November 30, 1962.

1065 wire and 1/8" 1095 drill rod. Titanium rods of 1/8" diameter were included in the pull-out tests for comparison purposes and to simulate adhesion to the liner material. The force required to remove the reinforcement, at a rate of 0.01"/min, from the matrix under shear was measured by the Tinius-Olsen Tensile machine and converted to pull-out strengths. Testing of the various resins and the effect of several surface treatments of the steel and titanium are summarized in Tables IV, V, and VI.

These results show a marked increase in resin adhesion if the material is cleaned prior to the bonding. Smaller differences can be seen from one type of epoxy to another with the ultimate bond approaching strengths of 3000 psi which is the shear strength of the resin itself. The smaller differences noted between formulations thus become almost insignificant when compared to increases in adhesion gained in an effective pretreatment. A resin system exhibiting low viscosity for good impregnation, extended room temperature pot life, and a relatively short elevated temperature cure cycle is ideal for winding applications. The system chosen for further study was the system employing Shell 828 epoxy resin, CIBA 906 anhydride curing agent, and BDMA amine accelerator. This system exhibited an optimum combination of the desired properties. Density tests on this matrix material yielded a value of 1.22 gm/cc ($0.044\#/in^3$).

TABLE IV

RESIN PULLOUT TESTS: 1095 STEEL (1/8" ROD)

PULLOUT SHEAR STRENGTHS (psi)

MEAN VALUES

RESIN TYPE	TRICHLOROETHYLENE SOLVENT CLEANED	VAPOR DEGREASED AND PHOSPHATE COATED
828/906/BDMA	$1660_{(5)}$*	$2820_{(4)}$
828/DMP30	$1480_{(6)}$	$1520_{(2)}$
1138/906/ACCEL.	$1520_{(2)}$	$2615_{(9)}$

TABLE V

RESIN PULLOUT TESTS: 1065 STEEL (.012" WIRE)

PULLOUT SHEAR STRENGTHS (psi)

RESIN TYPE	NO PRETREATMENT		HOT CAUSTIC/TOLUENE CLEANING TREATMENT	
	RANGE	MEAN	RANGE	MEAN
828/906/BDMA Group 1	---	$1140_{(1)}$*	1465 - 1720	$1600_{(4)}$*
828/906/BDMA Group 2	1175 - 1340	$1260_{(3)}$	1245 - 1670	$1400_{(3)}$
828/906/BDMA Postcured 18 hrs @ 350°F	1220 - 1225	$1225_{(2)}$	1675 - 1865	$1770_{(2)}$
1138/906/BDMA (NOVALAC)	594 - 685	$650_{(3)}$	656 - 688	$670_{(2)}$

* Subscripts denote number of samples (S/N).

TABLE VI

RESIN PULLOUT TESTS: 1/8" DIA. TITANIUM ROD

PULLOUT SHEAR STRENGTHS (psi, mean)

	RESIN SYSTEM TYPE	
SURFACE PRETREATMENT	828/906/BDMA IN 50/40/1. RATIO	1138/906/BDMA IN 50/50/1. RATIO
WIRE BRUSHED & SOLVENT WIPED	2025.	2375.
VAPOR BLASTED	2780.	3115.
ACID ETCHED*	3245.	3045.
SAND BLASTED	3310.	3205.

Notes: 1. Three samples were tested for each value shown above.

*2. Acid Etch Reference: Lee and Neville. Composition = 15gm NaF, 7.5 gm CrO_3, 75 gm H_2SO_4 in 375 gm H_2O. Etched 60 sec @ 40°C.

III. Flat Specimen Tests:

Efforts in producing valid tensile/modulus specimens were directed towards samples of several geometries. The initial windings were produced circumferentially on a drum 11" in diameter by 7" long (Figure 4c). Reinforcement used was the 4 and 6 mil carbon steel and 8 mil AFC77 stainless wire, while the resin matrix was the Shell 828, CIBA 906, and BDMA accelerator previously selected. Numerous specimens of 2, 3 and 4 layers thick were wound producing samples with a reinforcement weight fraction of 89%. Some difficulties were encountered in machining these wound specimens to produce flat tensile samples. Transverse cuts across the reinforcement frequently produced a shattering of the brittle epoxy matrix. The curvature of the fully cured specimen also produced an undesirable effect. Several of these composite windings were produced with the resin advanced to the partially cured B-stage. Flat specimens were then made by removing the windings and accomplishing the final cure between clamped plates in an oven at 350°F. Alignment of the reinforcement was difficult to retain during cure with some wires giving a "fishtail" effect. Additional samples were given the final cure at 3[illegible]°F between plates of a 100-ton press. Only slight improvement was gained using this method.

To correct this problem, a mandrel was designed (Figure 4a) to wind two flat specimens 1/2" wide by 9.5" long. The drive on the winding machine was modified with a cam giving 1/2" lateral travel so that the wire spacing could be accurately controlled. These specimens can then be tested with a minimum of machining to separate the two sections

Figure 1 Mandrels Used in Fabricating Characterization Test Samples

at the radius. Formica tabs were used to grip specimens in the tensile machine.

The representative range of data shown below is given for information purposes. The values are felt to be low because of problems mentioned in sample preparation and in tensile mount fixturing of flat laminate specimens. Data was generated from 22 specimens of four-layer composites of unidirectionally wire reinforced epoxy.

Elastic Modulus:	13 to 15 x 10^6 psi
Ultimate Tensile Strength:	1.5 to 2 x 10^5 psi
Yield Strength (.2% offset):	1 to 1.9 x 10^5 psi
% Elongation:	3 to 10

IV. NOL Ring Tests:

The use of "NOL Rings" has become a common test for evaluation of the cylindrical strengths of reinforced composites. The standard tensile ring, developed by the Naval Ordnance Laboratories [12], has the following dimensions: 5.75" inside diameter by 0.25" wide by 0.125" thick. A view of an NOL mandrel with a filament wound sample is shown in Figure 4b. Rings wound to these dimensions are tested in a tensile machine by utilizing a "split-D" test jig to apply the load to the specimen. Figure 5a presents a schematic of NOL tests and equations for calculations of stress and modulus.

Two NOL rings (0.10" thick rather than the standard 0.125" thickness), made from 8.4 mil AFC77 and 4 mil Carbon steel wires, respectively, were

12. Erickson, P.W., Perry, H.A., and Barnet, F.R., "Status of the NOL Ring Test for Glass Roving Reinforced Plastics," SAMPE Filament Winding Conference Transactions, March 1961, p. 246.

wound and loaded in tension to the maximum of the tensile machine (10,000 lbs). This load, equivalent to 200,000 psi tensile stress, was carried by the ring with no failure.

In the course of carrying out these tests, the investigators recognized the difficulty in effectively determining the modulus from the standard NOL ring. Efforts were spent on modifying the "dees" whereby the four edges were highly polished back about 1" to eliminate any gripping or frictional problems during the test. The "dees" were also cut back leaving about 1" of unsupported ring which provided an area for the mounting of strain gages and an extensometer. Although this latter method was a definite improvement, it was still difficult to obtain pertinent data from the standard ring.

Future work is planned with samples prepared and tested utilizing the "Racetrack Split-D" [13] which appears to be a distinct improvement over the standard NOL tensile test. The fixture, shown in Figure 5b, provides for a straight section adjacent to the split in the "dees" which substantially reduces the high bending stresses encountered in the NOL test. These bending moments in the ring, where the split occurs, leads to test data which is not truly representative of composite strength. The "racetrack" provides a flat section on which strain gages may be mounted to record load-strain properties.

13. Dow, N.F., Shu, L.S., Rosen, B.W., and Zwehen, C.H., "Design Criteria and Concepts for Fibrous Composite Structures," Final Report under NASA Contract #NASw-1377, July 1967, p. 96.

TENSION TEST	SCHEMATIC	STRESS EQUATION	MODULUS EQUATION	NOTES
SPLIT DEE NOL (a)	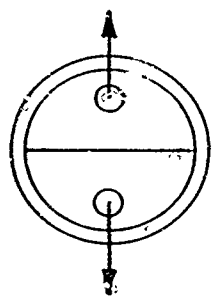	$S_{UT} = \frac{P_U}{2bt}$	A $E_t = \frac{\frac{P}{2bt}}{\frac{\Delta e}{\pi D_{avg}}}$	HEAD MOVEMENT (TAKEN AS THE DISTANCE BETWEEN THE "DEES") IS MEASURED, AND MODULUS IS CALCULATED FROM EQUATION "A" WHERE "e" IS TWICE THE DISTANCE BETWEEN THE "DEES". SPECIMEN USED: $D_i = 5\frac{3}{4}''$ $b = \frac{1}{4}''$ $t = \frac{1}{8}''$
NASA RACETRACK (b)	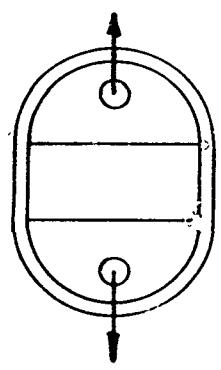	$S_{Ut} = \frac{P_U}{2bt}$	B $E_t = \frac{P}{2bt_\epsilon}$	DIMENSIONS OF THE SEMI CIRCULAR RINGS ARE SAME AS IN (a). THE CENTER UNSUPPORTED PORTION IS OF DIMENSIONS $5\frac{3}{4}''$ LONG BY $\frac{1}{4}''$ WIDE. AN EXTENSOMETER IS MOUNTED ON ONE OF THESE UNSUPPORTED LENGTHS, AND MODULUS IS CALCULATED FROM EQUATION "B". "ϵ" IS TAKEN AS THE MEASURED CHANGE IN LENGTH DIVIDED BY THE EXTENSOMETER GAUGE LENGTH.

Figure 5 Schematics of Two Types of Filament Wound, Ring Type, Tensile Specimens

FABRICATION AND TESTING

A. COMPOSITE TEST CYLINDERS

The results of the initial characterization of bond strength and unidirectional tensile strength indicated that the steel wire/epoxy system was, indeed, a feasible composite system. The next objective was to determine the overall fabrication techniques needed to effectively produce cylinders from this composite system.

It was the intent of this project to utilize metallic liners to provide the necessary abrasion resistance to the tube. These liners should also provide the tube with the necessary longitudinal strength so that only circumferentially wrapped filaments are needed to provide the hoop strength. The following fabrication techniques involve only hoop-wrapped steel wire for this reason. It is possible, however, to helically wind this reinforcement in the same manner as glass, boron, and graphite.

Single wires and four wire band widths (.025") have been helically wound in this laboratory. The major disadvantage in helically winding a rigid reinforcement like steel or boron is that the thin band widths result in many filament crossover points. These crossover points produce areas rich in resin and/or voids which can lead to premature failure of the composite.

This project concerned itself with the fabrication of steel wire/epoxy composite jackets wound over three different liner materials. The liners selected were fiberglass, titanium, and steel.

1. Fiberglass Liners

Initial experience in fabricating and testing composite vessels was obtained from filament winding glass liners with the steel/epoxy system. Four pressure vessels were fabricated with the following dimensions and characteristics:

a. All cylinders were 11.5" in length by 3.685" inside diameter.

b. Cylinder #1 consisted entirely of pre-preg E-glass (E-787/E-802 - U. S. Polymeric Corp.) while the other three consisted of the helically wound E-glass (liners) and a hoop wound jacket made of four layers of 6 mil high carbon steel wire in place of some of the glass.

In all cases, no additional resin was added to the wire. The entire winding operation was done under infrared lamps which caused excess resin from the pre-preg to flow sufficiently to wet each layer of the steel wire. Winding patterns and test results are shown in Table VII.

This initial qualitative test was another step forward in establishing the feasibility of utilizing steel wire as a reinforcing fila- n The wire reinforcement could certainly be handled on conventional winding equipment with little trouble and the qualitative data from this test showed that the specimens which contained the wire layers, although having a wall thickness only 4/5 of the all-glass cylinders, had a 30% increase in hoop strength. This indicated that the wire was contributing greatly to the composites' overall burst strength.

The encouraging results of the qualitative test stimulated investigation into further pressure testing whereby closer control of the design parameters was maintained. (The design criteria used for this test is

TABLE VII

BURST PRESSURE DATA: E-GLASS/MUSIC WIRE FILAMENT WOUND (93mm) CYLINDERS

	CYLINDER DESIGNATION			
	1	3	4	5
WINDING PATTERN (LAYERS)	10 Helix-Glass 7 Hoop-Glass	4 Helix-Glass 4 Hoop-Wire 4 Hoop-Glass	6 Helix-Glass 4 Hoop-Wire 3 Hoop-Glass	6 Helix-Glass 4 Hoop-Wire 3 Hoop-Glass
WALL THICKNESS (IN.)	0.125	0.087	0.100	0.100
DYNAMIC PRESSURE (KSI)	7.6	7.9	8.9	8.1
HOOP STRENGTH (KSI)	112	166	165	148
STRAIN (%)	1.67	2.28	2.50	3.00

shown in Appendix B). In this second test, all the cylinders were fabricated to 2.398" I.D. and 10" in length and were fabricated in pairs, i.e., two halves cut from one longer wound cylinder.

For this test, the cylinders were designed assuming a 4 to 1 ratio of hoop-to-longitudinal stress. Although there are little or no longitudinal stresses generated in the testing procedure utilized for rupturing these cylinders, the 4 to 1 ratio is generally utilized in designing recoilless rifles and was selected for this test. An attempt was made in this test to develop all of the required longitudinal strength with E-glass alone, wound at the pre-selected helical angle. The required hoop strength was then developed by hoop winding a jacket of either E-glass or steel filaments.

Materials

The pre-preg E-glass utilized for this test was 20-end roving E-787/E-801 (U. S. Polymeric Corp.). This system is made of E-801 glass, impregnated with an epoxy resin formulation which is very similar to the Epon-828/anhydride/amine resin used by this laboratory for its wet winding. The average tensile strength of the impregnated roving was 275,000 psi.

The steel wire used in fabricating the steel wire/epoxy jackets was the 6 mil NS-355 Rocket Wire with an average tensile strength of 435,000 psi.

The resin formulation selected for utilization with the steel wire was Epon-828 (100 parts), CIBA-906 (80 parts), and BDMA (2 parts). This resin system, which showed good bond strength in the pull-out test, is almost a replica of the resin system used in the pre-preg glass.

Fabrication Technique

Four different helical angles ($55^{o}6'$; $45^{o}6'$; $33^{o}48'$; $26^{o}40'$) were selected for this test to provide the necessary longitudinal strength. With each helical angle, two cylinders were wound with an all-hoop-wound E-glass jacket, and two with an all-hoop-wound steel wire jacket. (The design criteria used for these test cylinders is shown in Appendix B).

The tension on the E-glass was maintained at 0.33 lbs/end through the use of a standard constant tensioning device (Figure 6). This tension device allows for the presetting of any roving tension from 1/2 to 21 lbs. The setting used throughout this work was 6.6 lbs/roving.

Tension was maintained on the steel wire through the use of spring-loaded set screws on each of the individual spools which provided the necessary drag of the spools on their respective stationary axial rods (Figure 7). This tension, constantly monitored with a hand portable tensiometer, was maintained at 1.5 lbs/end throughout the winding by tightening or loosening the set screws.

The pre-preg E-glass was wound directly from its standard constant tensioning device to the winder. The steel wire was run from the spools through a solvent bath (perchloroethylene) on through a sandwiched foam wiper and then onto the winder for application to the cylinder (Figure 8a). Additional resin was applied to the steel fibers by brushing resin on the wire at the mandrel. As mentioned previously, the same resin formulations are used in both the pre-preg glass and wet-wound steel wire, thus eliminating any problems that might arise from the use of dissimilar matrices.

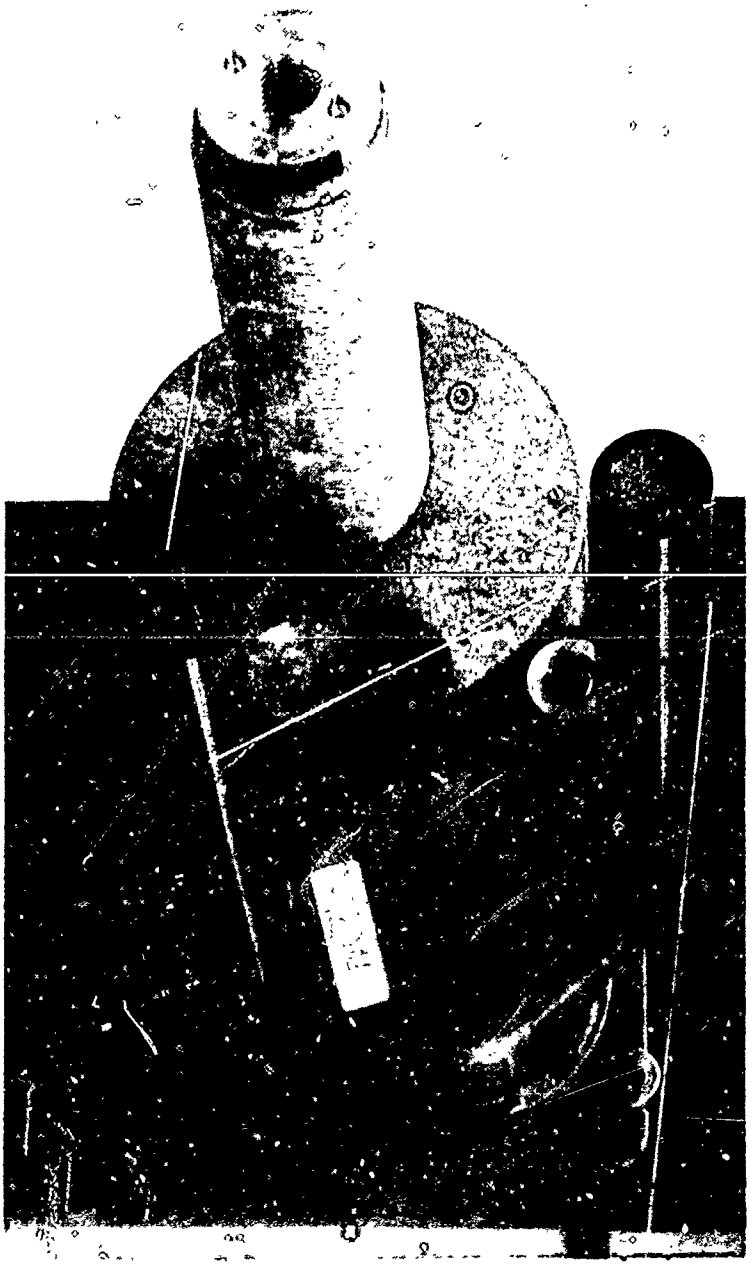

10-5-71

Figure 6 Tensioning Device for Prepreg Glass Roving

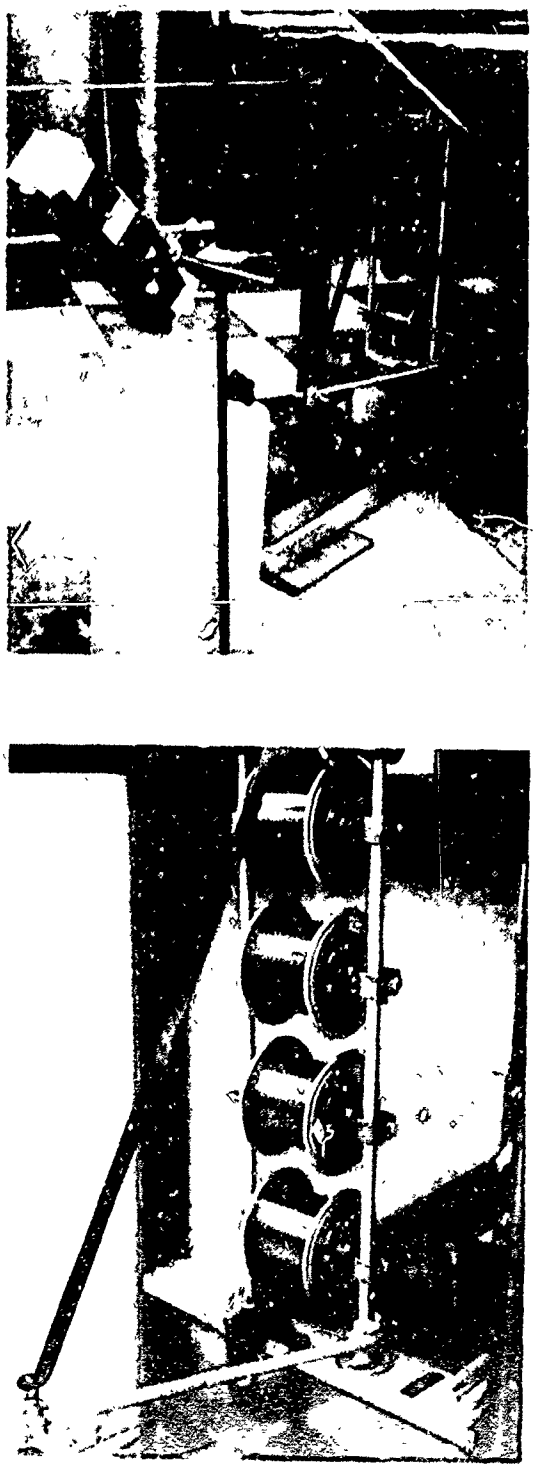

Figure 7 Feeding Fixture Utilized for Steel Filaments

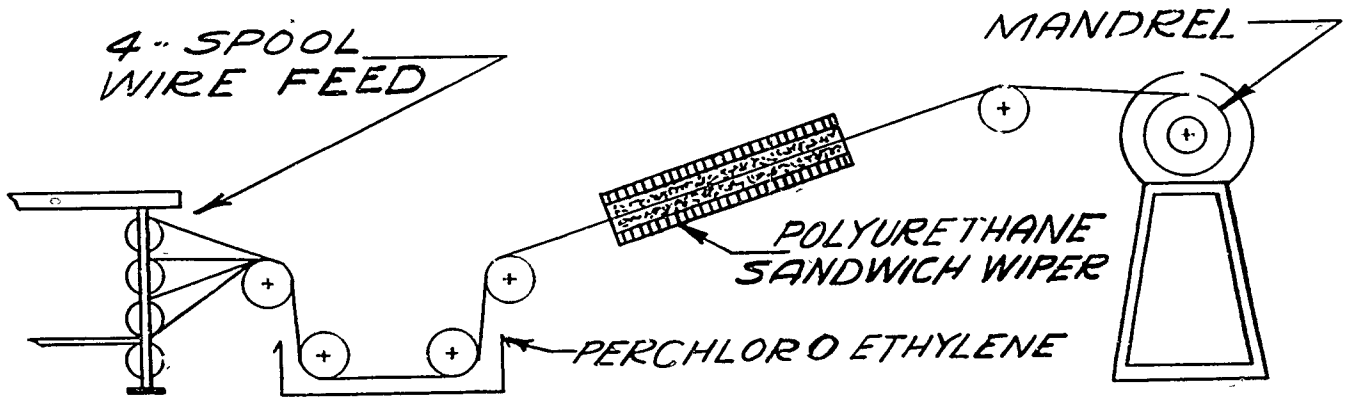

SOLVENT/WIPER WIRE PRETREATMENT

A.

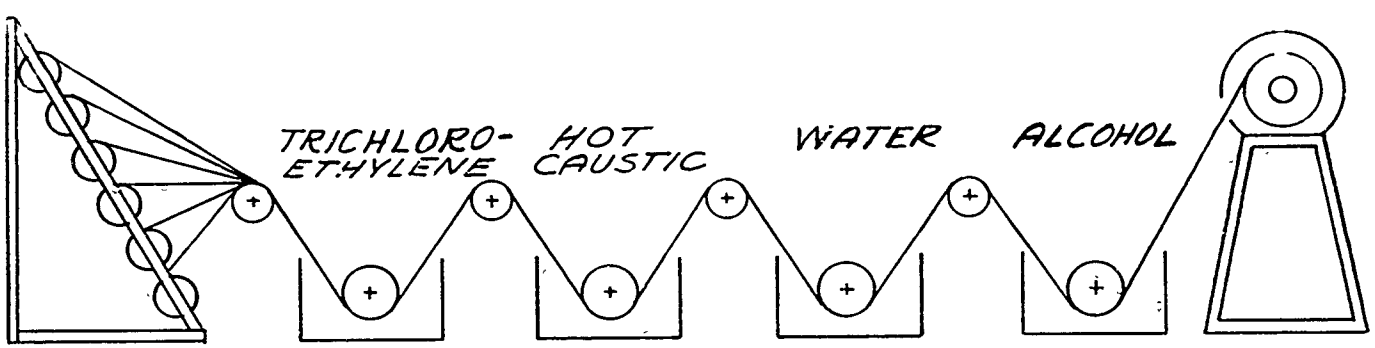

HOT CAUSTIC/SOLVENT WIRE PRETREATMENT

B

Figure 8 Sketches of Two Types of Wire Pretreatments

Test and Results

These cylinders were pressure-tested at facilities available at the Watervliet Arsenal's Materials Engineering Branch [14]. The test fixture (Figure 9) permits the application of internal pressure with the specimen in essentially the open-end condition, i.e., without end restrictions. The strain gages on the inside of the fixture are calibrated to measure the pressure within the specimen. The steel filler sleeve is placed within the specimen to reduce the fluid volume needed and the steel restraining rings prevent possible extrusion of the pressure seals. Strain gages are also mounted on the individual cylinders so that the strain of the cylinders during pressurization can be determined.

The test fixture is actuated by a hydrodynamic system operating on the principle of energy storage in a liquid-charged accumulator. Upon release, fluid transfer occurs into the fixture and test specimen. Through this manner, dynamic pressures of 20,000 psi are obtainable with the above equipment. The results of this test program are shown in Table VIII.

Figures 10 and 11 show the sixteen cylinders after dynamic burst testing. In almost all cases, a good center section rupture was realized. Center ruptures are very desirous in this type of test because they negate the possibility of stress concentrations being set up in the cylinders from the end restrictions of the test facility.

The prime reason for this test was to determine if cylinders fabricated with steel filaments could be pre-designed in the same manner as conventional

14. Kendall, D., Eig, M. and Davis, D., "Effect of Loading Rate and Winding Sequence on Fatigue and Rupture of Pressurized Filament-Wound Glass-Reinforced Plastic Cylinders," Picatinny Arsenal Technical Report No. 3693, August 1968, p. 5.

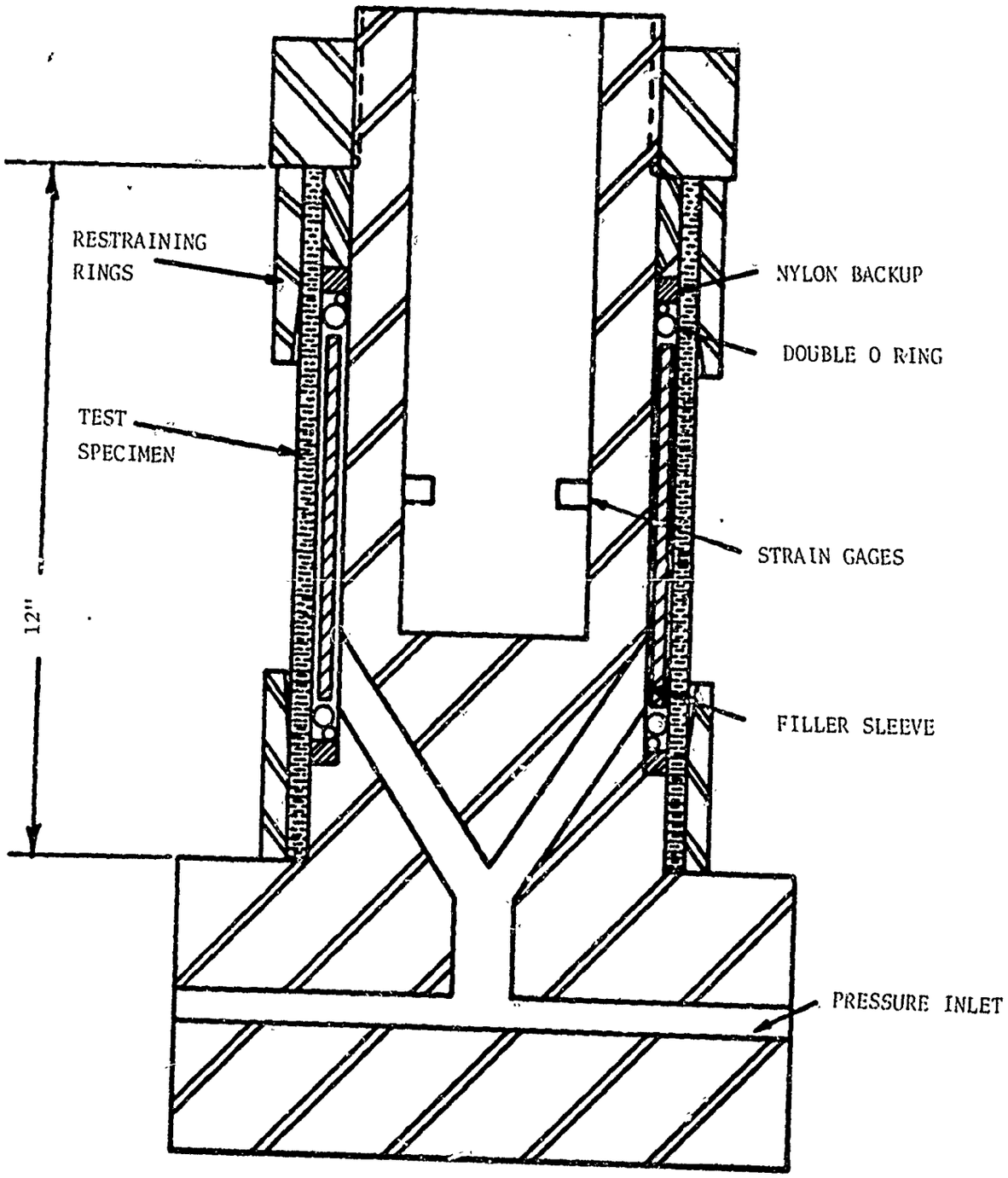

Figure 9 Schematic of Pressurization Fixture Used for Fiberglass Liner Cylinders

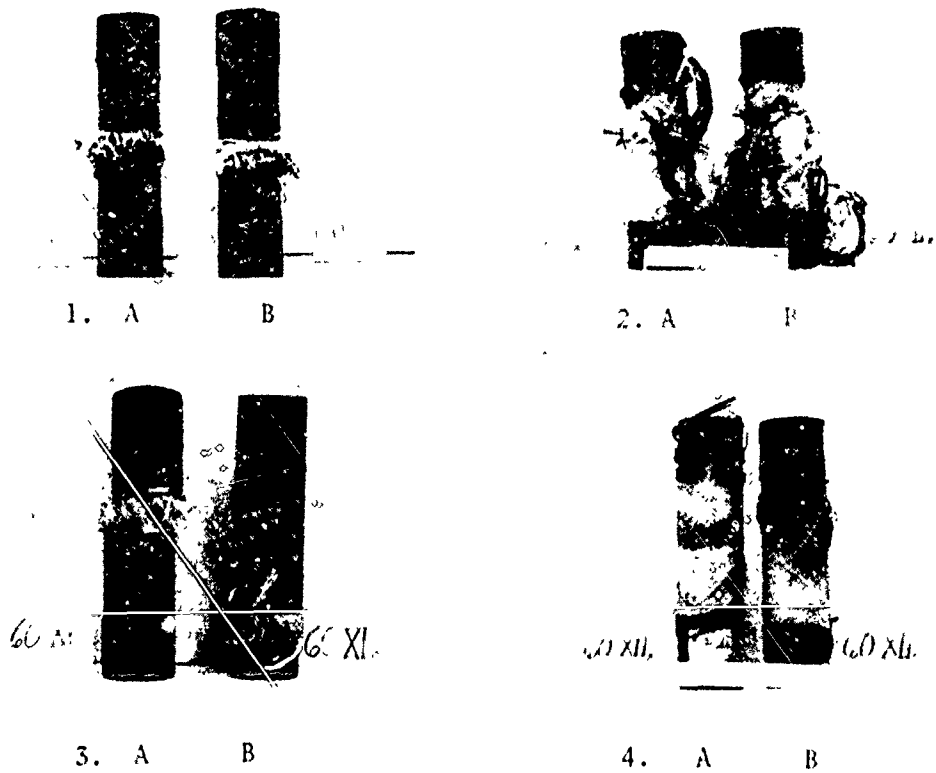

Figure 10 Fiberglass Liner Cylinders After Pressure Testing

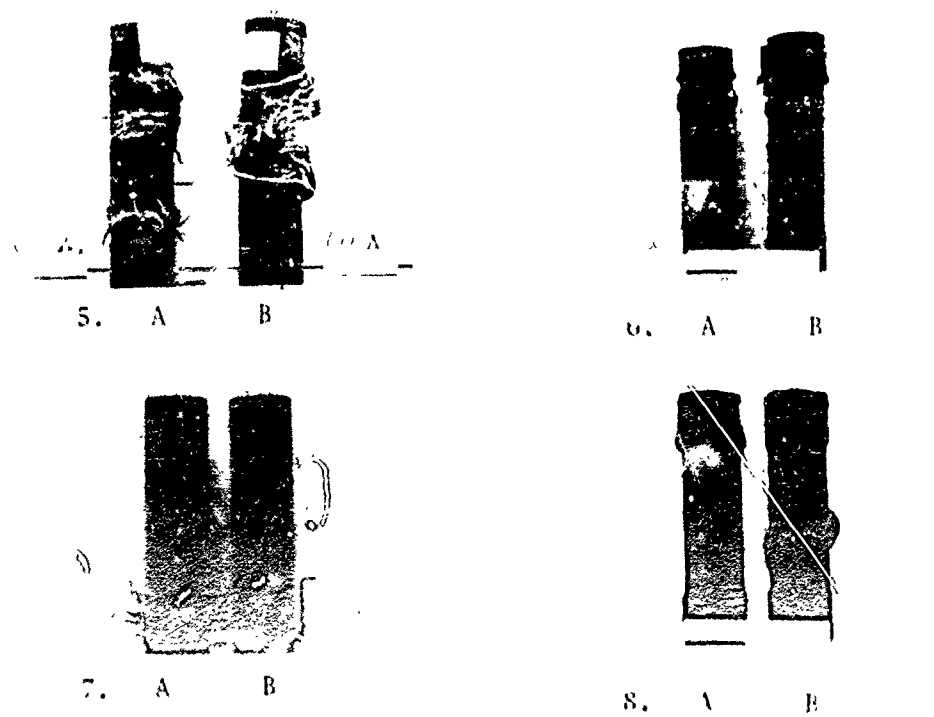

Figure 11 Fiberglass Liner Cylinders After Pressure Testing

TABLE VIII

BURST PRESSURE DATA: E GLASS/ROCKET WIRE FILAMENT WOUND 60mm. CYLINDERS

SPECIMEN NO.	COMPOSITION	HELICAL ANGLE	NO. HELICAL LAYERS	ENDS/IN (A)	NO. HOOP LAYERS	ENDS/IN (A')	AVG. O.D. (IN)	BURST PRESS (KSI)	DESIGN PRESS. (KSI)	REMARKS
1A	E-Glass	55°6'	8	352	7	224	2.729	16.5	14.0	*1B Experienced a delayed failure after 0.33 seconds at 18,000 psi
1B	E-Glass	55°6'	8	352	7	224	2.728	18.0*	14.0	
2A	E-Glass & Steel Wire	55°6'	8	352	3	176	2.663	11.0	12.4	
2B	E-Glass & Steel Wire	55°6'	8	352	3	176	2.672	10.3	12.4	
3A	E-Glass	45°6'	4	360	12	214	2.689	17.4	13.8	* Cylinders originally designed for 4 hoop layers but mechanical difficulties with winder after 2nd layer resulted in termination at this point
3B	E-Glass	45°6'	4	360	12	214	2.687	17.3	13.8	
4A	E-Glass & Steel Wire	45°6'	4	360	2*	159	2.533	4.1	5.5	
4B	E-Glass & Steel Wire	45°6'	4	360	2*	159	2.533	3.9	5.5	
5A	E-Glass	33°48'	4	430	12	230	2.728	15.9	12.9	
5B	E-Glass	33°48'	4	430	12	230	2.735	15.5	12.9	
6A	E-Glass & Steel Wire	33°48'	4	430	6	150	2.605	9.3	10.5	
6B	E-Glass & Steel Wire	33°48'	4	430	6	150	2.600	9.2	10.5	
7A	E-Glass	26°40'	2	492	14	216	2.698	16.3	14.0	
7B	E-Glass	26°40'	2	492	14	216	2.701	16.5	14.0	
8A	E-Glass & Steel Wire	26°40'	2	492	6	161	2.552	7.5	10.3	
8B	E-Glass & Steel Wire	26°40'	2	492	6	161	2.560	8.6	10.3	

reinforcements. The all-glass cylinders, on the average, showed a 22% increase in their actual burst strength over the designed pressure. The glass and steel filament cylinders, on the other hand, showed an average decrease in burst strength to designed strength of 17%.

The present theory of design (Appendix B) of the composite tubes with glass liners is only preliminary. A number of refinements with appropriate experimental verifications remain to be explored; in particular, inelastic behavior and the effect of filament crossovers.

Previous work [15] shows that, "It may be possible for helical-wound composites to carry a higher load because of the internal agency generated by the crossovers."

This statement seems to agree with the results obtained with the all-glass cylinders (Nos. 1, 3, 5, and 7). When helically-wound glass liners are reinforced with the hoop-wound steel filaments, different results are obtained which might result because of the use of materials with dissimilar moduli.

These reasons, along with the effect of pre-loading (tensioning) of the filaments during winding, might explain these discrepancies and will be investigated fully in future work.

In lieu of the above, the investigators felt that the steel filaments are indeed comparable to the present state-of-the-art of filament winding designing and, therefore, an additional two-phase fabrication program, using monolithic metallic liners, was initiated. The first phase involved the fabrication with titanium liners while the second concerned itself with all-steel liners.

15. Tsai, S.W., Adams, D.F., and Donner, D.R., "Analysis of Composite Structures," NASA Contractor Report #CR-620, NASA, Washington, D.C., November 1966.

2. Titanium Liners

The reason for investigating steel wire composites, was to find a higher modulus composite system (in comparison to glass/epoxy) for use as jackets over metallic liners. A closer match of strain rates between jacket and liner should eliminate the buckling problem experienced when glass/epoxy jackets were coupled with metallic liners.

The Brunswick Corporation, Lincoln, Nebraska, under a contract from Watervliet Arsenal, investigated the use of titanium as a suitable metallic liner. Titanium was selected because of its low density, low modulus, and its relatively high strength and abrasion resistance for a non-ferrous metal.

Materials

The material selected for liner use was 6Al 4V titanium alloy with the following physical properties:

Tensile Strength	-	170,000 psi
Yield Strength	-	150,000 psi
Elastic Modulus	-	17×10^6 psi

Tubing with 3.685" ($\pm$ .007") I.D. was formed from 0.020" thick by 24' long sheet stock which was round-welded and heat-rolled. The tubing was then cut into 12" lengths for liner use. The tubing supplier (Carpenter Steel Company) guarantees the strength of the weld to be greater than the material itself.

The reinforcement wire utilized for this study was the 6 mil diameter NS-355 Rocket Wire, mentioned previously, having a minimum

tensile strength of 435,000 psi. The wire is supplied on single end spool packages with an average of 5 lbs of wire/spool.

The matrix material for this study was the same (epoxy resin-anhydride hardener-amine accelerator) system utilized throughout the project.

The wire pretreatment selected for this phase was one which was recommended by Brunswick for use when bonding epoxy to stainless steel. This pretreatment (Figure 8b) has been found (by Brunswick in the past) to provide an excellent bond between stainless steel and epoxy resins.

Several references were researched in regard to finding the optimum surface preparation of the titanium for bonding to the wire/epoxy jacket. Many chemical etchants based on fluorides were cited but no direct etchant versus bond strength was found. The easiest production pretreatment-sand blasting followed by vapor degreasing-was tried on the first titanium lined cylinder (S/N-4). This proved so successful that it was used for the balance of the cylinders.

Fabrication Technique

An aluminum mandrel (6061) was turned from cylinder stock to the required 3.685" O.D. It was 12" long with oversize lock rings attached at each end which were used to contain the titanium liner and to tie off the reinforcement at the start and finish of winding. The steel wires were set up on a rack holding six spools. The tension (2 lbs) on each spool was controlled through the use of a spring-loaded washer working on the side of the spool. The six wires were fed onto a common pulley

to form a band width of approximately .036" wide. This band was then fed through the pretreatment baths and a pass of 7' was provided from the alcohol bath to mandrel to allow for drying of the wire. The catalyzed resin was applied by brush and squeegee at the mandrel.

After the required thickness (layers) were wound, additional local reinforcement was applied to the outboard 3" of cylinder at each end. This tapered buildup was done to assure rupture in the 6" gage length and it consisted of alternate layers of 143 glass cloth (unidirectional) and hoop-wound steel (Figure 13) until an additional buildup of 0.156" was obtained at the ends. Cylinders were gelled (tack-free) under an infrared lamp in the winder for 4-6 hours while revolving slowly to prevent resin run-off. Additional cure followed in a circulating oven for two hours at 250°F and for two hours at 350°F.

Test and Results

Six titanium lined cylinders were fabricated with the steel epoxy jackets under this contract. Cylinder Nos. S/N-4 through S/N-7 were pressure-tested at Brunswick Corporation's facilities and the results of this testing are shown in Table IX.

The test fixture consisted of a cold-drawn (C-1141) steel axis threaded onto ends to take a heavy steel end fitting. All of the longitudinal loads developed by the expansion of the specimen during the hydrostatic pressurization would be taken out by the steel axis.

The problems involved in sealing the cylinders for pressurization to 20,000 psi were difficult to solve. Initial sealing techniques called for a fixture designed to seal each end of the test cylinder in epoxy resin.

TABLE IX

BURST PRESSURES OF WIRE WOUND TITANIUM LINERS (3.685" I.D.)

SERIAL NUMBER	CONSTRUCTION	WALL THICKNESS INS.	BURST PRESSURE KSI	COMPUTED FIBER STRESS KSI	COMMENTS
SN-1, 2 & 3	-	-	-	-	Three preliminary cylinders without liners. They were constructed in order to develop optimum fabrication techniques for the winding of the test cylinders.
SN-4	0.020" thick 6Al 4V titanium liner with a jacket of 17 layers of hoop wound NS-355 wire (6 mil)	0.120	20	450	Cylinder ruptured on 3rd attempt; (1) 17,400 psi and seal failed, (2) 18,000 psi and seal failed again, (3) maintained 20,000 psi for 3 seconds before cylinder burst. It ruptured at transition area between hoop wraps and the longitudinal glass cloth build-up at one end indicating possible stress concentration at this point (See Fig. 12)
SN-5	(same as SN-4)	0.120	>20	N/A	Cylinder was pressurized three times. Each time the pressure reached 20,000 psi (capacity of equipment) the seals failed. Upon inspection of cylinder, after testing, there was no evidence of fiber damage (See Fig. 13)
SN-6	0.020" thick 6Al 4V titanium liner with a jacket of 12 layers of hoop wound NS-355 (6 mil)	0.104	14.5	475	A 1" wide rupture, 360° around cylinder at the transition area (See Fig. 14)
SN-7	(same as SN-6)	0.104	15.6	500	A 1.5" wide rupture, 270° around cylinder. Again rupture was located near transition area (See Fig. 15)
SN-7 & 8	(same as SN-6)	0.100	-	-	These two cylinders have straight O.D. with no glass build-up at the ends as other cylinders had. These cylinders have yet to be tested.

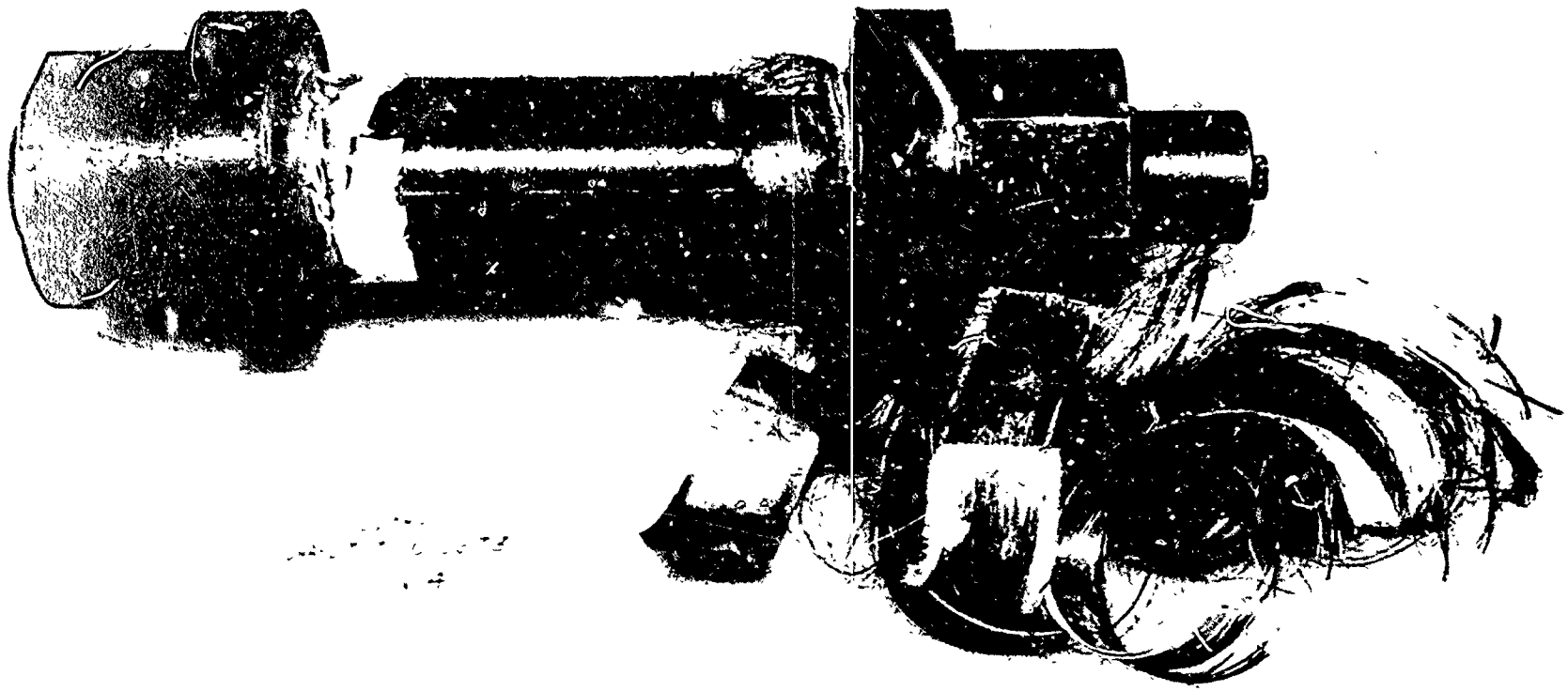

Figure 12 Titanium Liner Cylinder (SN-4) After Pressure Testing

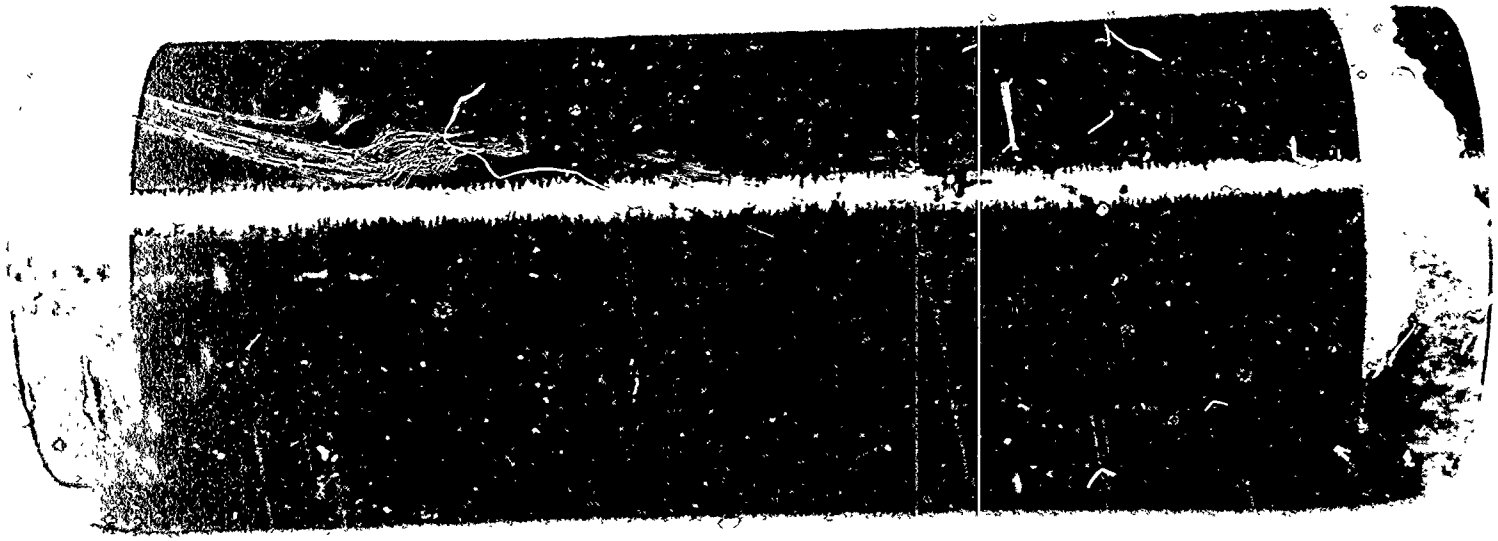

Figure 15 Titanium Liner Cylinder (SN-5) After Pressure Testing

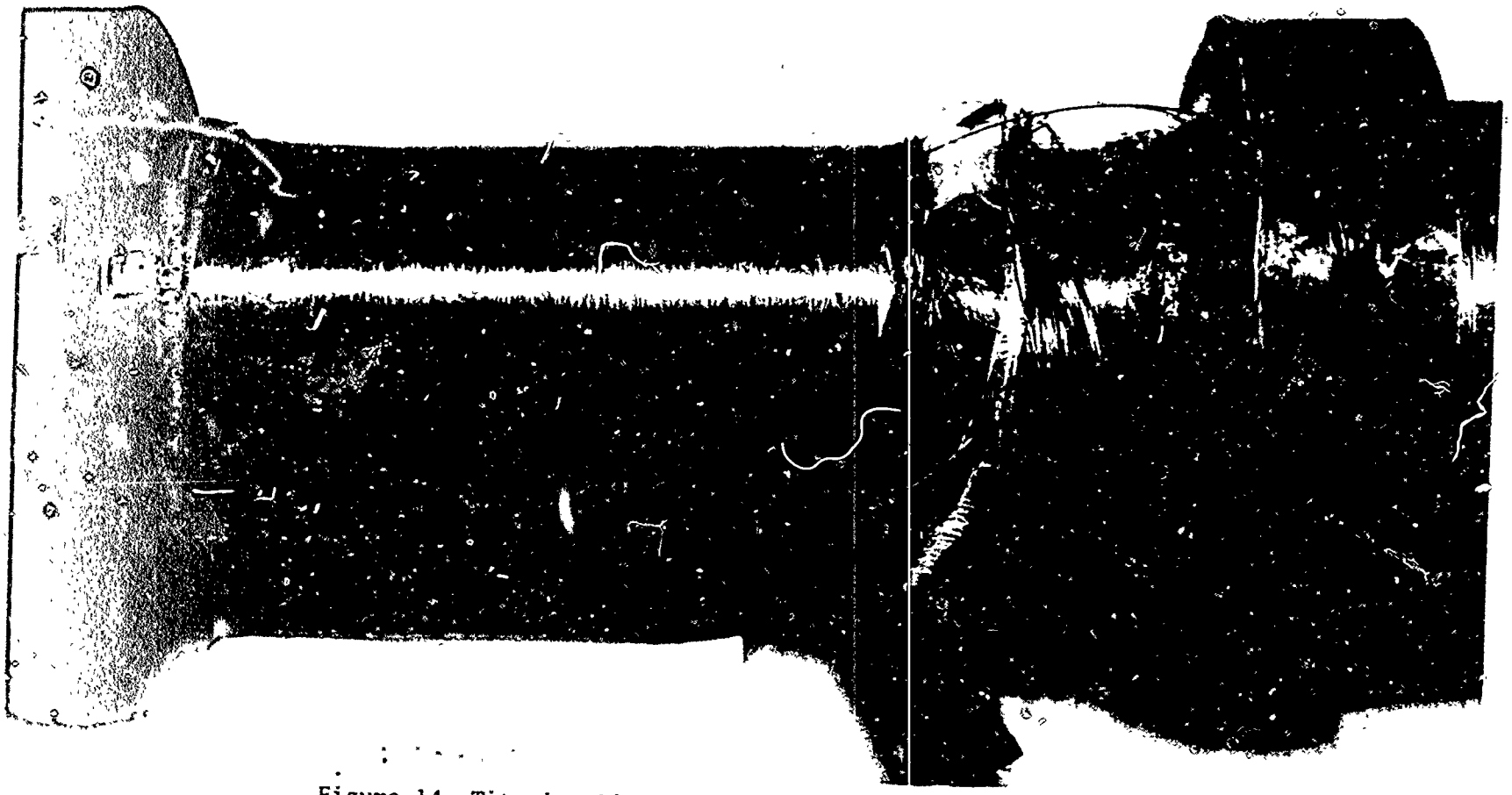

Figure 14 Titanium Liner Cylinder (SN-6) After Pressure Testing

Figure 13 Titanium Liner Cylinder (SN-7) After Pressure Testing

The hydraulic fluid, however, caused the cylinder wall to expand enough to induce peel-loads on the bond between the epoxy and the specimen and leak paths quickly developed.

This problem was finally solved by cutting down the shaft of the test fixture to allow the use of V-shaped leather cup seals backed with a steel ring. Even with this seal arrangement on the I.D. of the cylinder, it was necessary to pot the O.D. of each cylinder end with an aluminum-filled epoxy in order to prevent the tube expansion from initiating leak paths.

Cylinders S/N-1, S/N-2, and S/N-3 were the initial attempts by Brunswick at fabricating with steel wire. They were preliminary attempts which did not contain the titanium liners and were never pressure-tested.

Cylinders S/N-4 and S/N-5, the first to contain the liners, were designed to rupture at 20,000 psi. This is the capacity of this hydrostatic test facility and, as is shown in Table IX, great difficulty was experienced in trying to burst these two cylinders. The design pressure was lowered to 15,000 psi for cylinders S/N-6 and S/N-7. Cylinders 8 and 9 were fabricated similar to 6 and 7 (without the build-ups at the end), and sent to Watervliet Arsenal, but, to date, have not been tested.

Figure 16 shows a comparison between the composite cylinders tested and a cylinder fabricated of conventional gun steel. With the composite construction shown for the 20,000 psi burst pressure, wall thickness is reduced by over 50% and the weight is reduced by almost 70%. A weight saving of about 60% is also shown for the 14,000 psi burst composite cylinder when compared against a similarly designed all-steel cylinder.

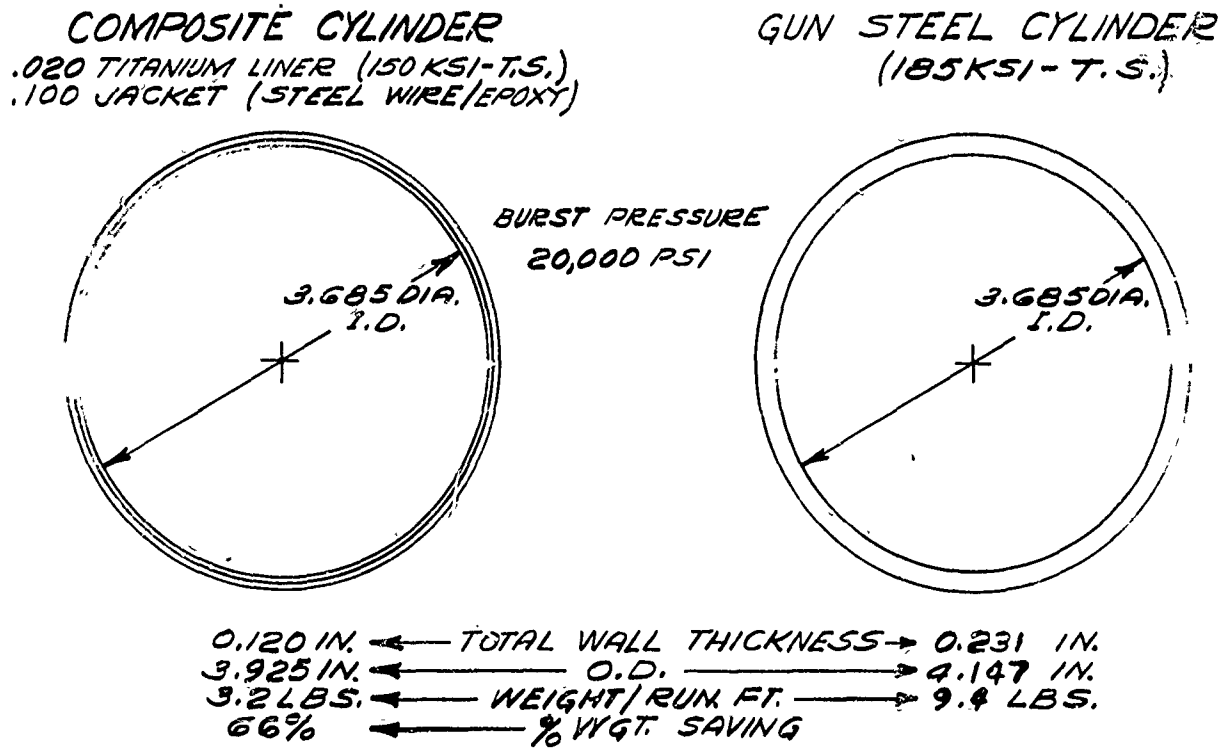

A

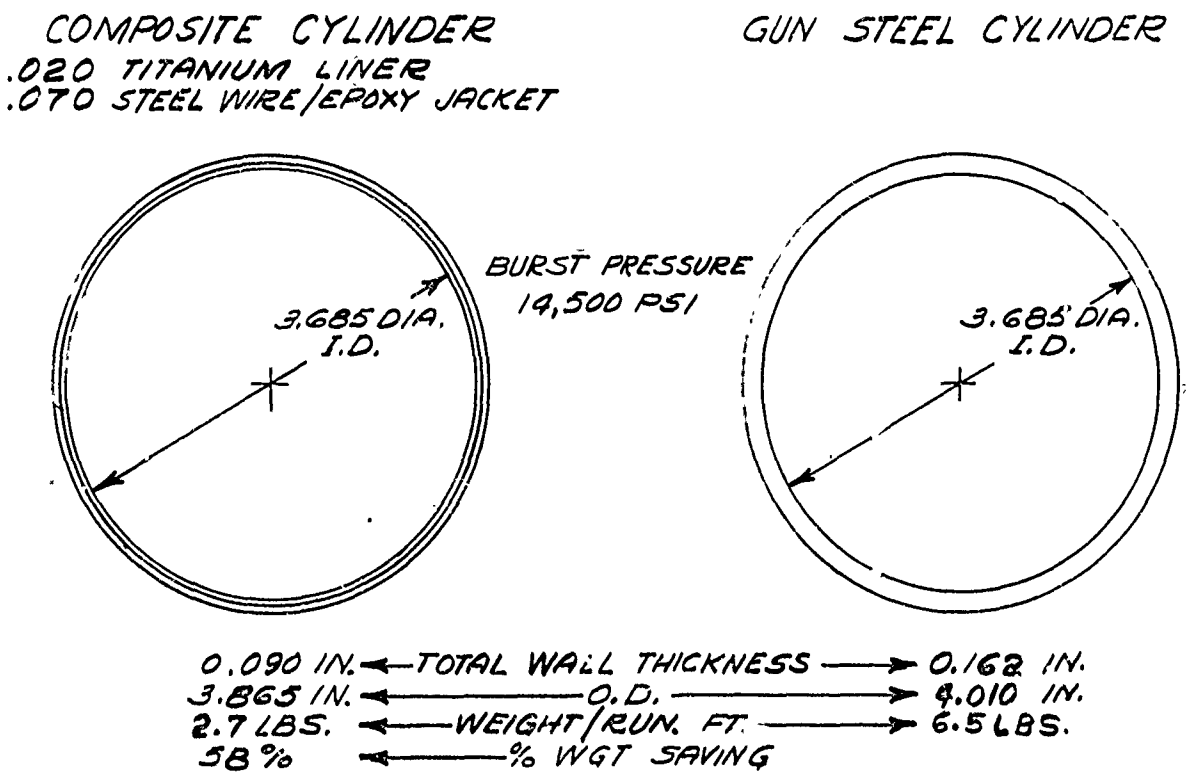

B

Figure 16 Size and Weight Comparison of Titanium Liner Composite Cylinder Vs. Gun Steel Cylinder for Two Design Pressures

This interim study demonstrated that the excellent tensile strength of small wires (NS-355 Wire, in particular) can be retained in a cylindrical composite utilizing commercial filament winding technology. When the wire is wound with an epoxy matrix, it retains almost all its virgin strength which greatly aids in the designing of composite structures.

3. Steel Liners

The results experienced with the titanium liners and steel wire jackets led the investigators to believe that lightweight recoilless rifles (R.R.) could be successfully designed, fabricated, and tested.

A finished conventional 106mm M40A1 tube was procured and modified for use as a rifled steel liner. The conventional tube (Figure 17) is made of gun steel and is 9' long. This tube was first cut in half into 2 each 54" lengths. The 54" muzzle section was then cut into two sections (OCL-1 and OCL-2) and machined to the dimensions shown in Figure 18. The difference between #1 and #2 lies in the fact that the wall thickness in the 12" gage length is different for each one. OCL-1 has a wall thickness of 0.100" (from the groove depth of the rifling to the outside) while OCL-2 has a 0.050" wall.

These two cylinders were fabricated to act as test samples to assure correct design and fabrication techniques before the stub (54") 106mm R.R. was prepared.

Materials

The steel liners themselves are conventional gun steel (modified 4330 steel) with an ultimate yield strength of 160 ksi and ultimate

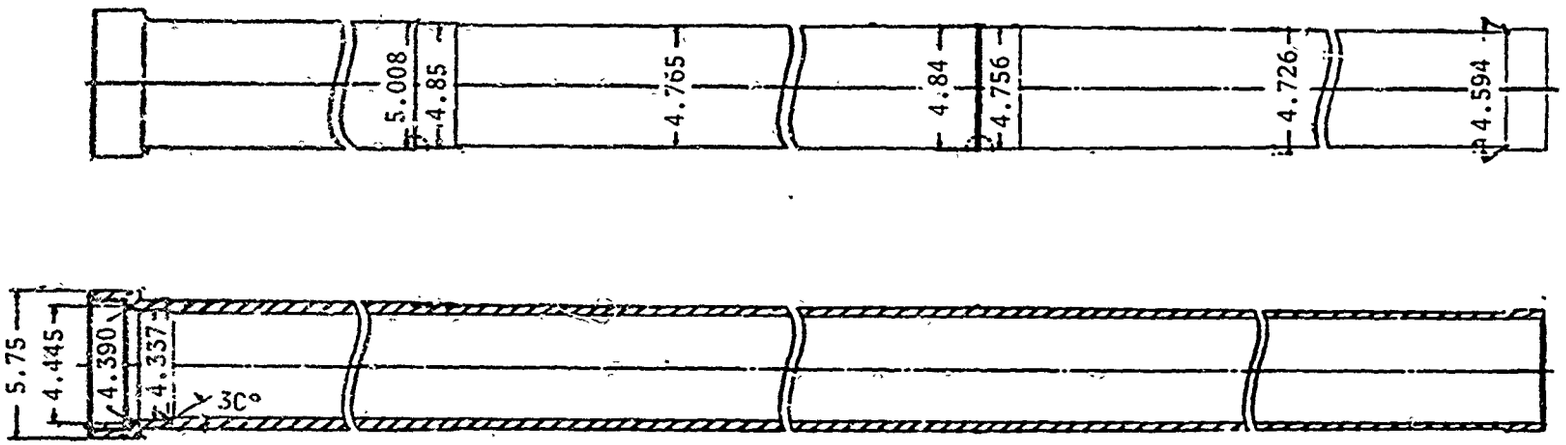

Figure 17 Drawing of Conventional 106mm M40A1 Gun Tube

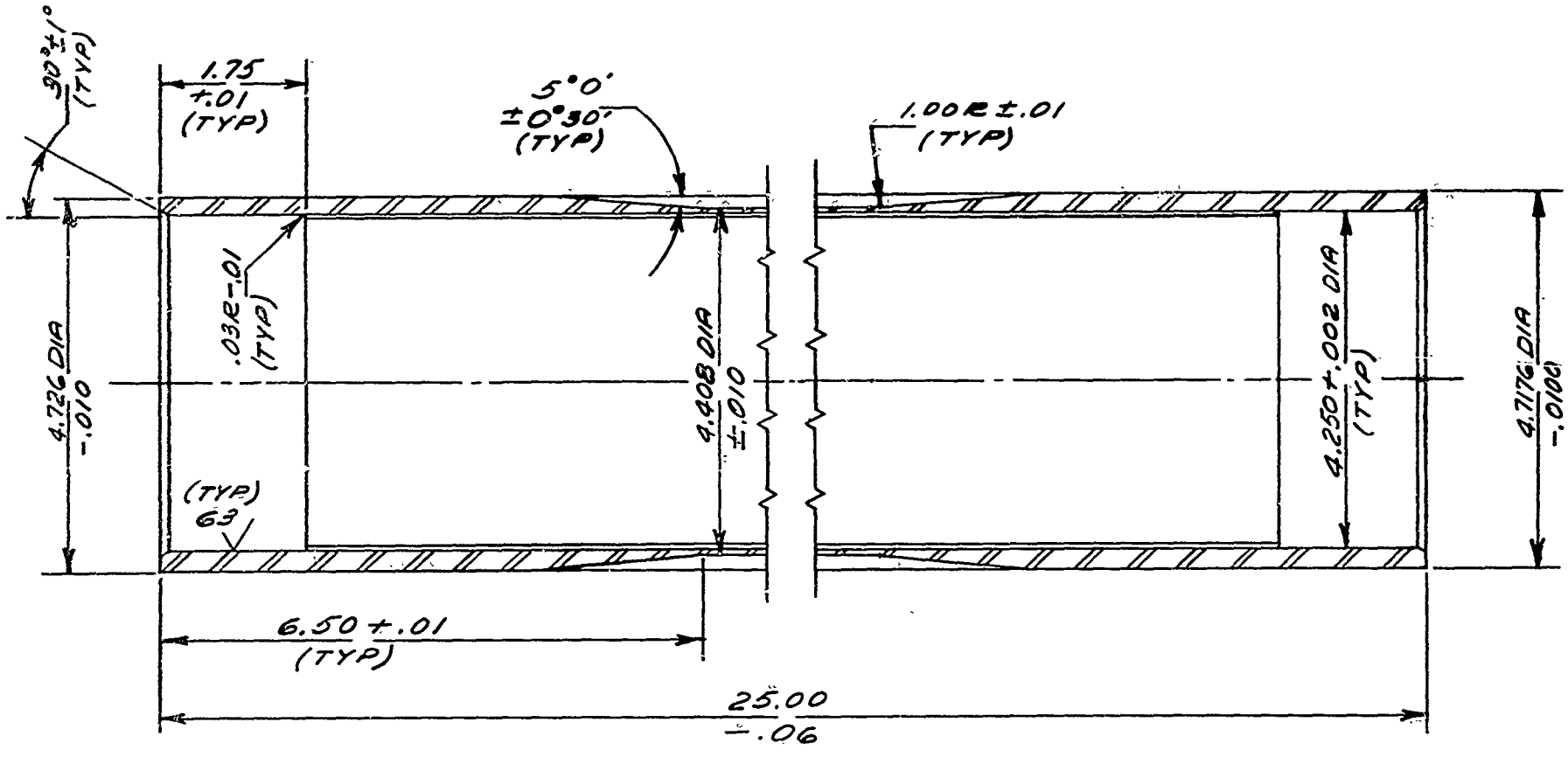

Figure 18 Dimensional Drawing of Steel Liner Test Cylinder (OCL-1)

tensile strength of 185 ksi. Both cylinders were machined to a 12" gage length with a 5° taper back to the large O.D. and differ only in their wall thicknesses.

The 6 mil NS-355 Rocket Wire was again utilized as the jacket reinforcement and the same epoxy-anhydride-amine resin system was used for the matrix. Individual tensile samples were taken from the four spools of wire (two samples taken before and again after winding). The average wire tensile strength for these 16 samples was 457,000 psi. This value shows a 5% increase over the original 435,000 psi tensile strength and was utilized in the design computations shown Appendix B.

Fabrication Technique

For these, rather heavy test cylinders, aluminum (6061) end caps (Figure 19) were fabricated to support these liners during the winding sequence. In this test, the wire was fed simultaneously from four spools to form an approximate band width of .025". The wire pretreatment selected was the solvent-wipe technique and the catalyzed resin was applied by brush and squeegee at the mandrel. No unusual difficulties were encountered in winding the circumferential layers in this manner.

To assure a good bonding between the steel wire/epoxy jacket and steel liner, the entire outside diameter of the cylinder was sand-blasted and then wiped thoroughly with solvent (MEK) just before winding.

Cylinder OCL-1 was filament wound with 23 layers of hoop winding in the 0.100" wall gage length. The larger shoulder sections received only 19 layers of hoop windings. No slippage or other difficulties were

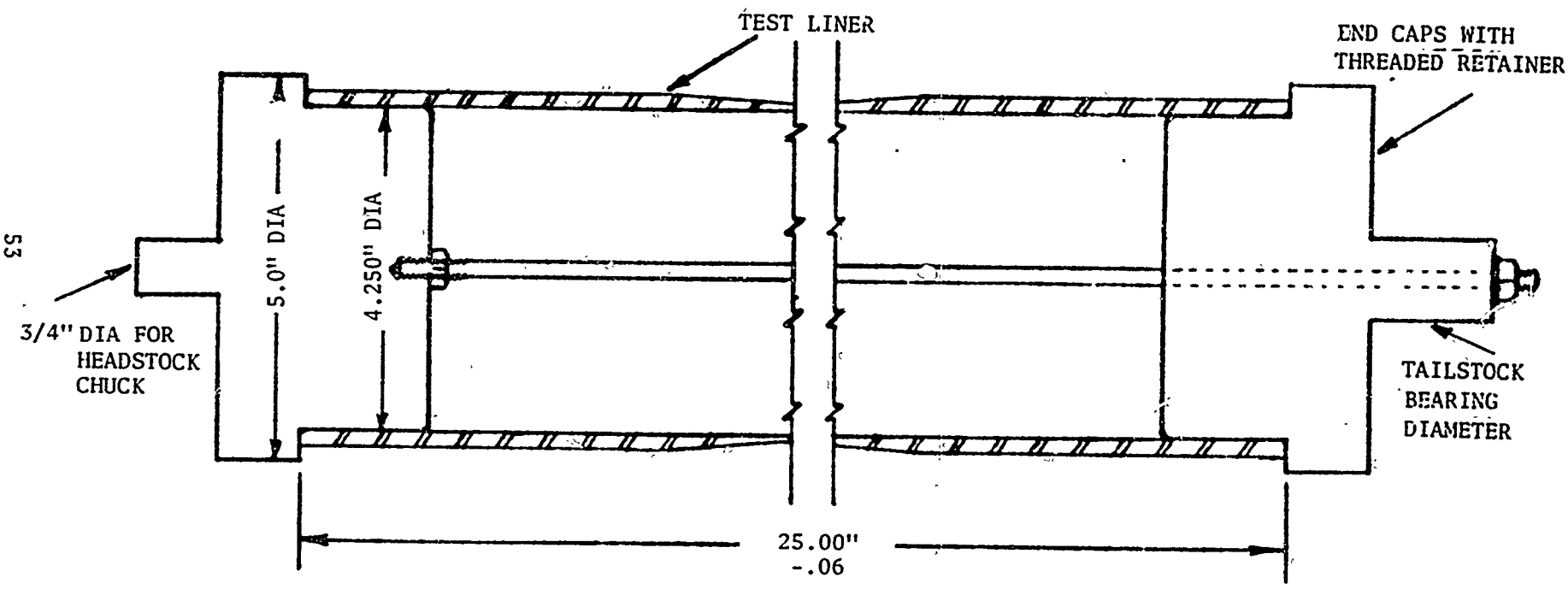

Figure 19 Schematic of End Caps Used for Winding Pressure Test Cylinders

experienced in hoop winding the 5° slopes from the liner's gage length section to larger shoulder sections. Tension was maintained at 1.5 lbs/end through the use of the spring-loaded set screws.

The average number of ends/linear inch for the 23 layers was 151.6 and the O.D. buildup in the gage length was 4.670". Before the wire windings were applied, the O.D. in gage length was 4.426" *, the wall thickness of the composite jacket after winding was 0.122".

The cylinder was allowed to revolve slowly in the winder under infrared lamps for five hours. After this time it was completely gelled (tack-free), and was then placed in an air-circulating oven for 3-1/2 hours at 350°F. (Figure 20 c&d)

* Before the actual winding, two strain gages (B-L-H type SR-4) were mounted directly on the steel liner in the middle of the gage length. These gages were mounted 180° apart and the lead wires were run parallel to the axis of the cylinder to tabs mounted at the edge of one of the shoulders as shown in Figure 20a. These gages were mounted in order to continually monitor, during the pressure cycle, the strain of the liner at the liner-jacket interface and the tangential strain readings during pressurization. In order to protect the gages and lead wires, one complete layer of pre-preg E-glass was hoop-wound over the entire cylinder (Figure 20b). This E-glass layer was allowed to gel in the winder by applying infrared heat before the start

A

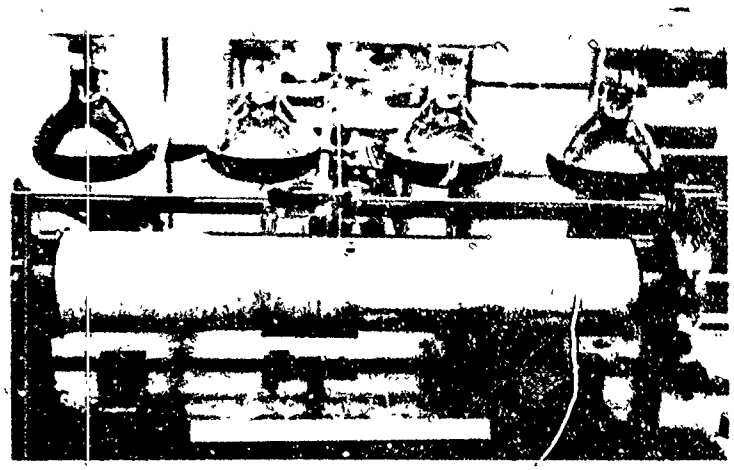

B

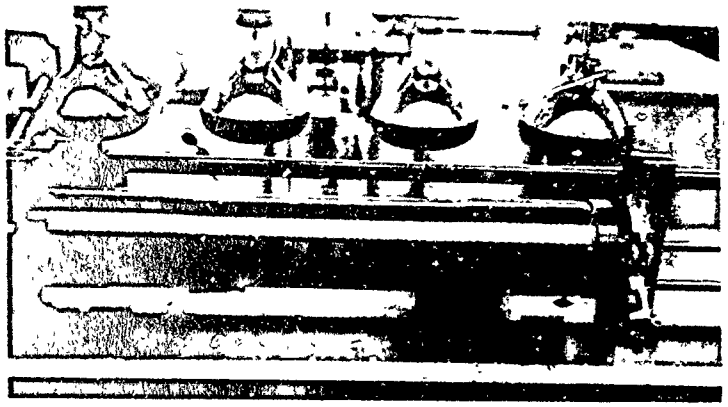

C

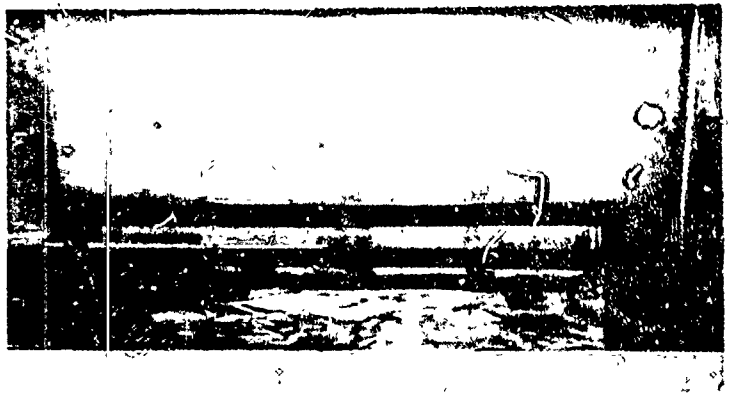

D

Figure 20 Four Stages of Winding the Steel Liner Cylinder

of the steel wire winding. The O.D. of the liner, with the E-glass protective layer, was 4.426" and this is the reason for the discrepancy between this O.D. value and the machined figure of 4.408".

A continuity check on the gages was monitored periodically during winding and remained intact throughout the winding operation. However, after cure of the cylinder, both circuits had shorted out and this interface data was not obtained.

Test and Results

Before the pressurization test, the finished cylinder was again strain-gaged. Four gages were externally mounted 90° apart in the center of the gage length as shown in Figure 21. Constant monitoring of these gages was maintained by attachment of the lead wires to a SR-4 strain indicator (B-L-H).

The pressure equipment utilized for this test is shown schematically in Figure 22. The facility manufactured by an American Company, consists of a pressure balance (100 ksi) with hand-operated hydraulic pump, pressure intensifier, and a 15,000/lb pressure gage. The testing equipment is capable of generating and measuring 15,000 lbs pressure utilizing the hydraulic pump alone. By utilizing the valve system shown in the schematic, the intensifier (a differential piston device) can be added to the system to increase the pressure capability to 100 ksi. Pressure is

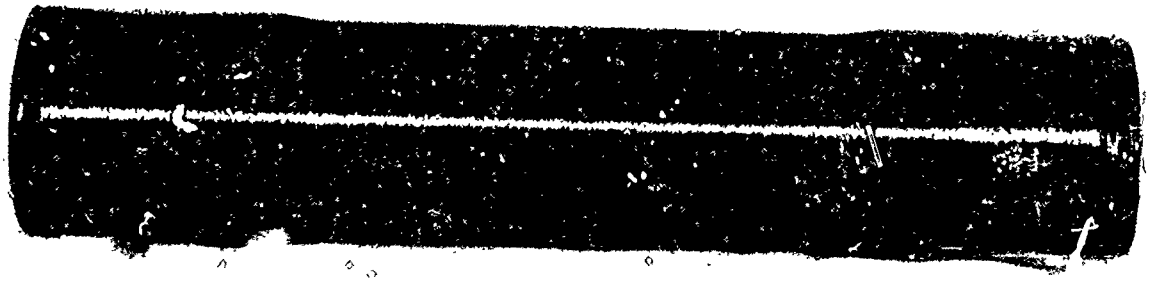

Figure 21 Steel Liner Test Cylinder Before Testing with Strain Gages Attached

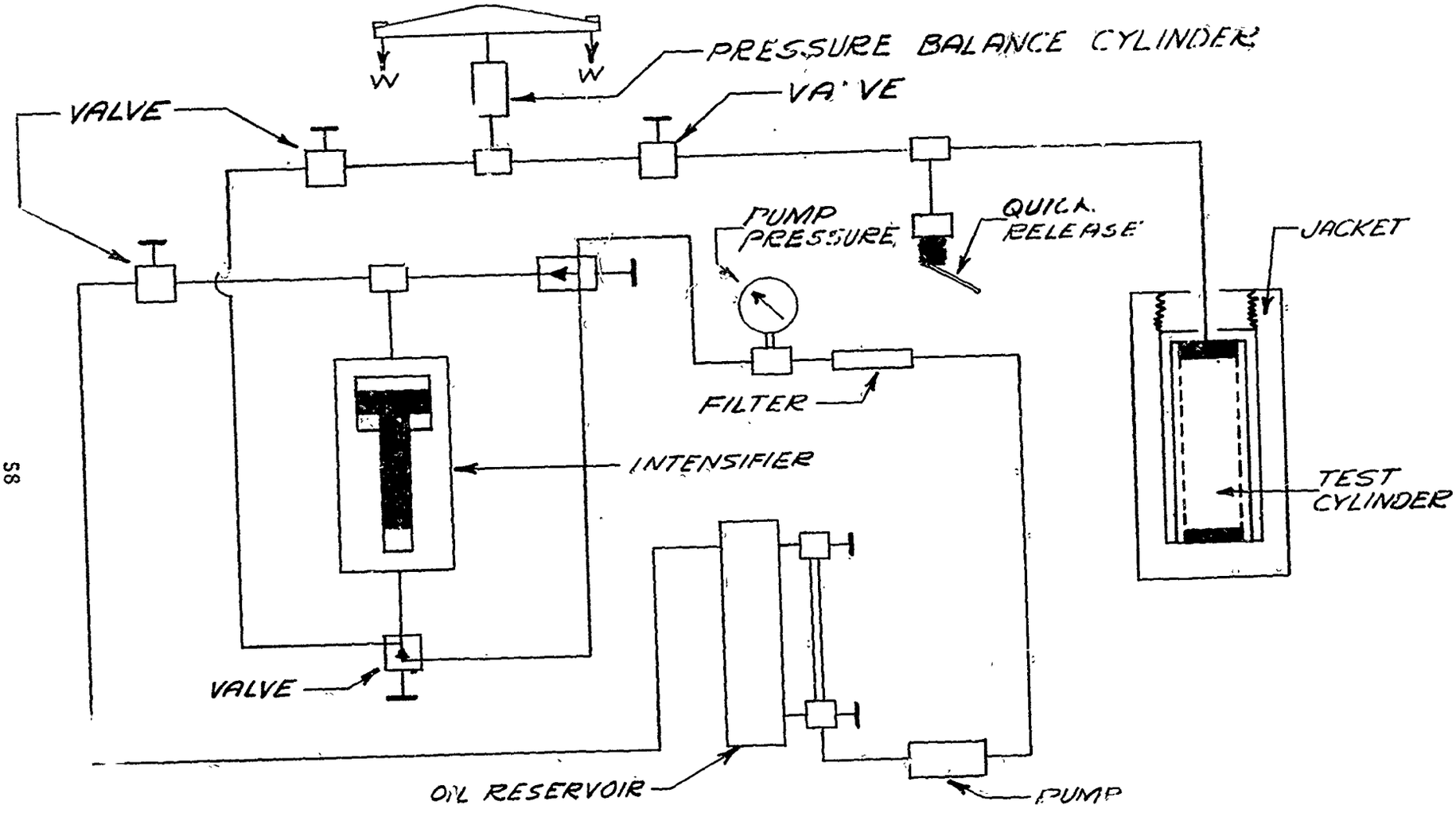

Figure 22. Schematic of a Pressure Test Cell Used to Measure Burst Strength

held at the desired level in the test cylinder and measured by the pressure balance utilizing the dead-weight gage, floating piston principle.

The cylinder itself was given an extremely harsh internal pressurization test with this type equipment. The pressure was raised from 0 to 20,000 psi in a period of 10 minutes. It was brought up and held in 5,000 psi increments while the strain was recorded on all four gages. However, the 5,000 psi increment from 20 to 25 ksi required another 15 minutes. From 25 ksi to failure, the pressure was raised and held in 1,000 psi increments. About five minutes elapsed between these increments so that another 20 minutes elapsed before the cylinder finally ruptured at exactly 29,000 psi. For 60 minutes the cylinder remained entirely under internal pressure and this extremely slow rate is a severe type of burst test.

The strain measurements are shown in Table X, and a plot of the strain vs. pressure readings is shown in Figure 23. The actual burst pressure of 29,000 psi shows a good correlation to the designed pressure of 29,343 psi which was determined from computer program explained in Appendix C. The external strain gages indicated what would appear at first to be yielding at around 17,500 psi. However, this knee that occurs in the pressure-strain curve of this composite jacket/steel liner cylinder is not indicative of an overall yield of the cylinder.

TABLE X

COMPOSITE TEST CYLINDER (106mm): STRAIN VS. PRESSURE

STRAIN - μ INS./IN.

KSI	GAGE #1	GAGE #2	GAGE #3	GAGE #4	AVERAGE
0	0	0	0	0	(Trial Run)
5	1635	1635	1610	1670	1638
10	3285	3285	3360	3345	3319
0	15	20	20	20	19
0	0	0	0	0	(Test)
5	1630	1620	1660	1665	1646
10	3280	3265	3355	3340	3310
15	4990	4990	5120	5110	5053
20	7945	7845	8255	8135	8045
25	12145	11840	12785	12230	12250
26	12220	12880	13965	13350	13104
27	14240	14000	15345	143[illegible]	14495
28	15550	15070	out	15730	15450
29	18910	-	out	-	Tube Failed
0	5195	4670	out	5110	4992

Previous work[16] on filament-wound composites over homogeneous steel liners has shown that up to the yield point of the steel, both jacket and liner contribute in resisting the internal pressure. Beyond the liner's yield point, the liner contribution is constant, while the jacket load increases in a direct relationship to its modulus. This overall effect produces a pressure-strain curve (shown in Figure 24) that reaches the yield strain of the steel liner at a pressure equal to the load capability of the liner plus that of the jacket at this strain value. Beyond this point, the composite cylinder curve rises to burst pressure along a path parallel to the pressure-strain relationship of the jacket itself.

Two views of the ruptured cylinder can be seen in Figures 25 and 26. (Excess filaments were removed before photos were taken. The jacket consisted of a "birds-nest" of broken and twisted wires just above the rupture.) Notice the absence of catastrophic failure which is a general characteristic of most filament-wound composites. At rupture, the liner bulged circumferentially over a length of 2 in. The liner started to peel back at the ends of the bulged section indicating that, beyond this ruptured section, the jacket held.

A comparison of the strength and weight of this composite cylinder against an all steel cylinder is shown in Figure 27. This information clearly indicates that although a high density filament

16. Rosato, D.V. and Grove, C.S., "Filament Winding," John Wiley and Son, New York, New York, 1964, p. 203.

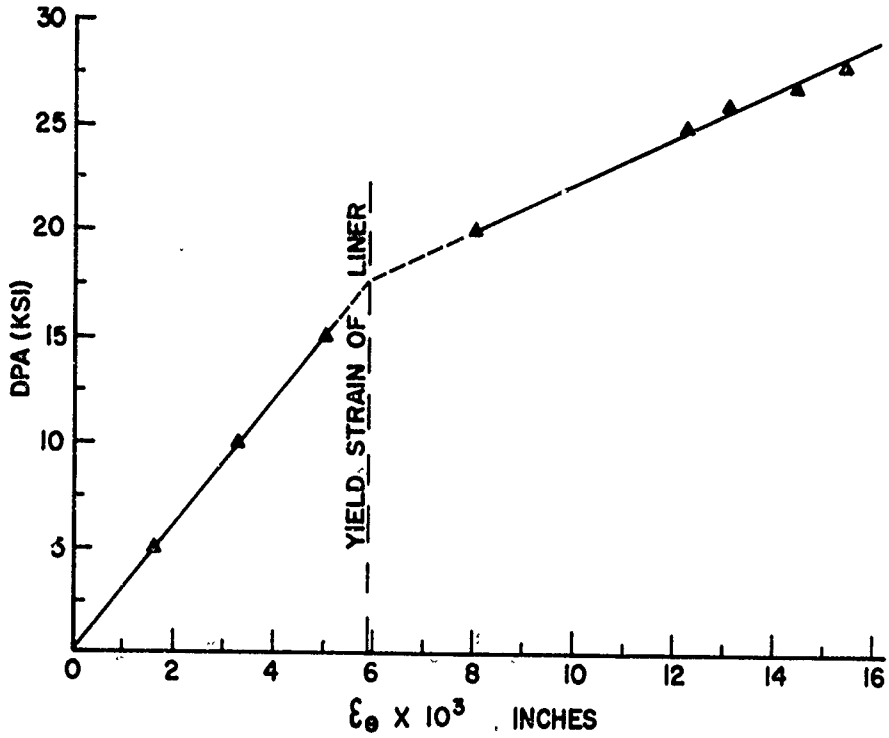

Figure 23 Plot of Pressure Vs. Strain (at O.D.) for OCL-1 Cylinder

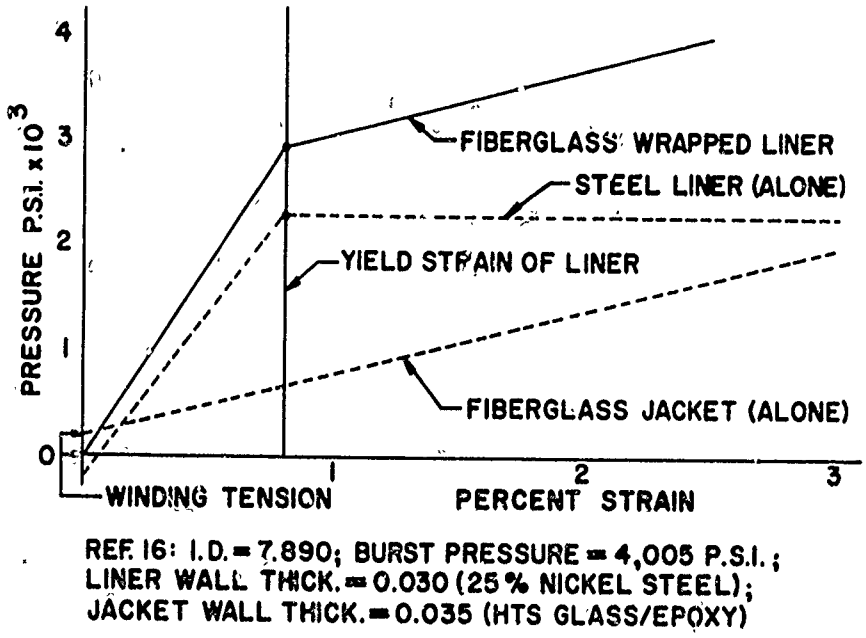

Figure 24 Representative Pressure-Strain Curve Illustrating the Contributions of Metallic Liner and Composite Jacket to Cylinder's Burst Strength

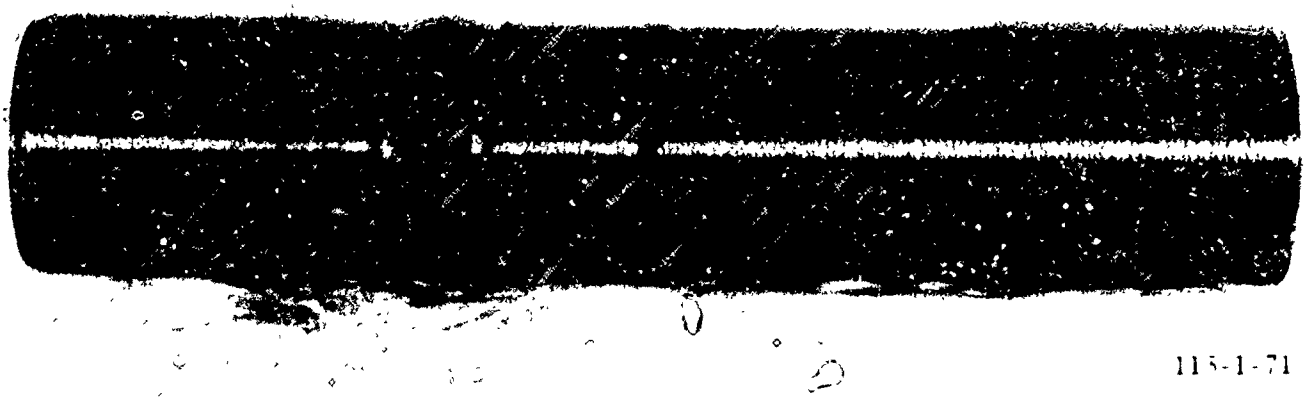

Figure 25 Steel Liner Cylinder (OCL-1) After Pressure Testing

Figure 26 Close-up View of the Ruptured Area on OCL-1

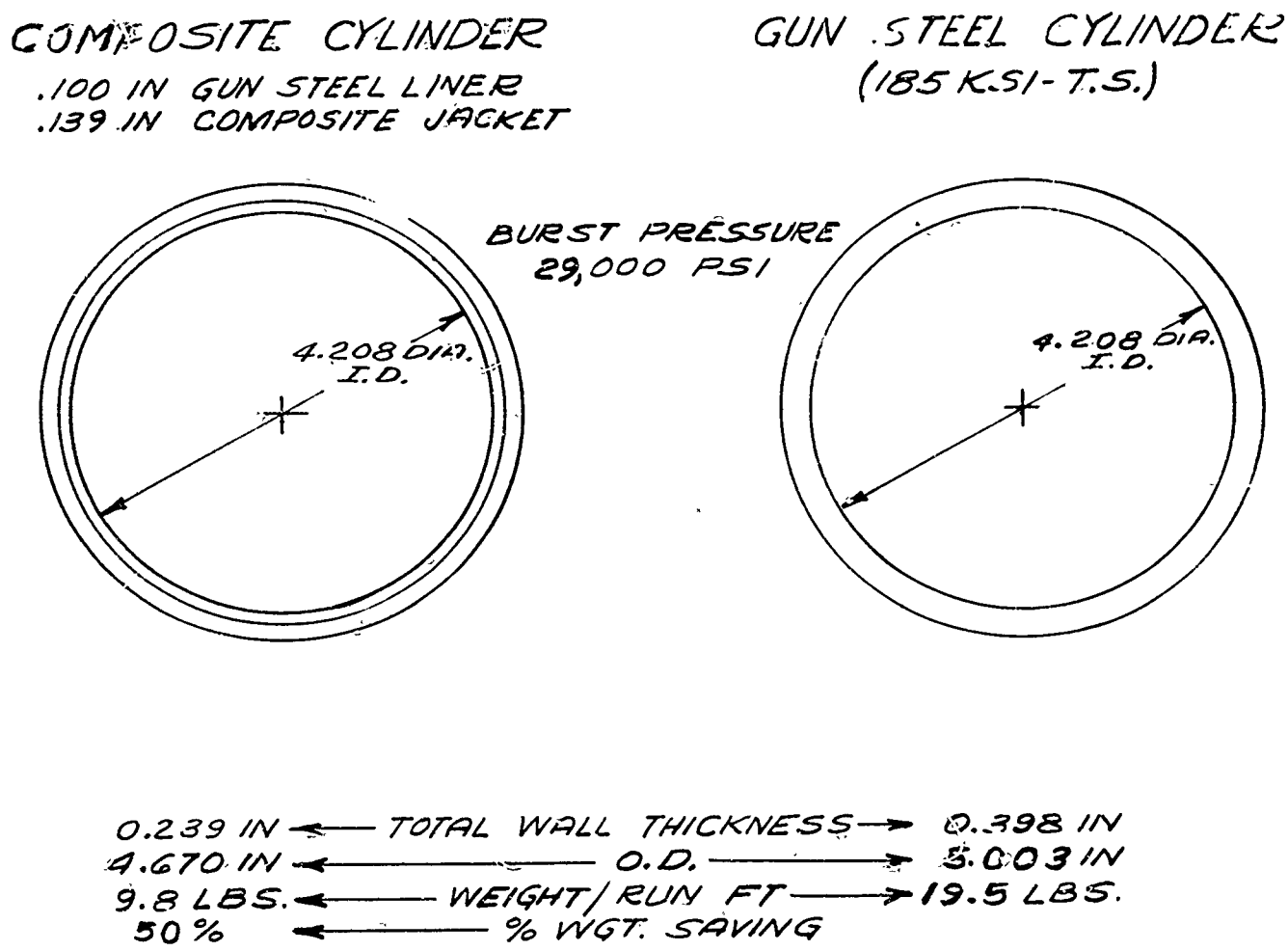

Figure 27 Size and Weight Comparison of Steel Liner Composite Cylinder Vs. Gun Steel Cylinder Designed

is used, the high-strength characteristics of this filament is such that a great weight savings can be realized over high-strength gun steels designed to the same internal pressures.

As previously mentioned, OCL-2, which was the second pressure cylinder cut from the conventional tube, was machined similar to OCL-1 except for its thinner wall thickness (0.050"). Lack of funds prevented the winding and testing of this cylinder. However, future work includes the fabrication and testing of this and other similar cylinders. These cylinders are scheduled for additional burst tests along with the static and dynamic fatigue testing.

B. COMPOSITE GUN TUBE

One of the prime objectives of this project was to design and fabricate an actual gun component from composite materials. In line with this thinking and because of the encouraging preliminary data gathered, fabrication of a 54" version of the 106mm R.R. was initiated. The 54" long tube was selected for fabrication because of the length limitation of the available winding machine. The laboratory-type winder used throughout this program has the maximum capacity of winding items up to 60" in length.

A modified composite 106mm R.R. gun tube was selected for this work because of:

a. availability of conventional 106mm tubes which are produced here at the Watervliet Arsenal;

b. availability of conventional ammunition for test firing;

c. general Army interest in such a weapon for possible utilization in Army helicopters and light planes.

The design criteria used in fabricating this weapon is shown in Appendix C.

Materials

The 54" breech section of the same conventional 106mm tube which was utilized for the steel liner test cylinders, was selected for the liner material and was further modified according to Figure 28. After machining, (Figure 29) the liner was given a magnaflux inspection to assure the absence of cracks.

The same type NS-355 wire (with the increased tensile strength of 457 ksi) and epoxy formulation used in the steel linear study was used for fabricating the composite jacket for this gun tube.

Fabrication Technique

As with the rifled test cylinders, similar Aluminum (6061) end caps were fabricated to support and mount the tube liner in the winding machine (Figure 30).

Four wires were again wound at the same time with the solvent-wiper pretreatment. The tension on the wires was again controlled at 1.5#/end through the use of the spring-loaded set screws. The catalyzed resin was painted and squeeged on the wires at the mandrel and a bank of infrared lamps remained on during 90% of the winding time.

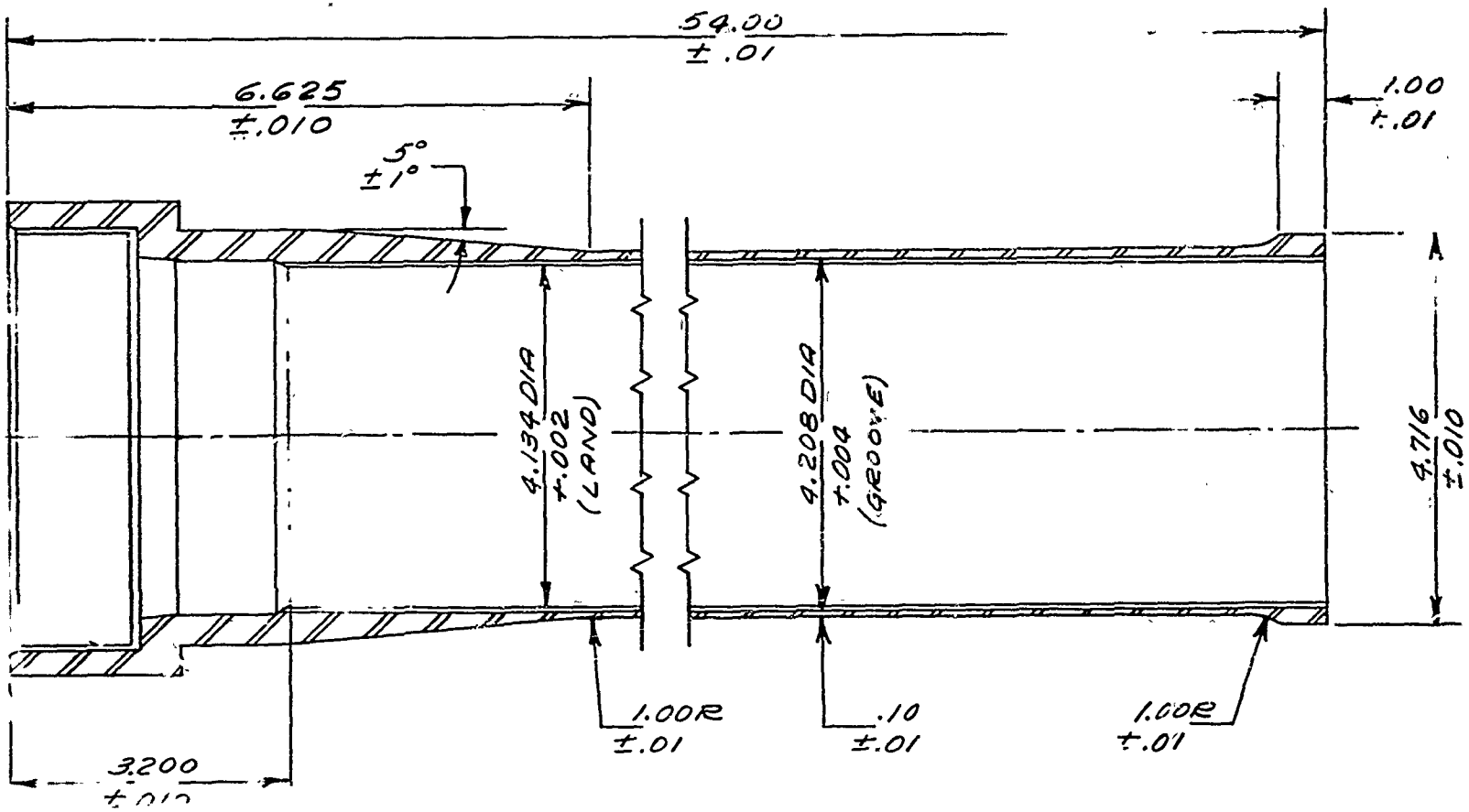

Figure 28 Dimensional Sketch of 106mm Stub Gun Liner

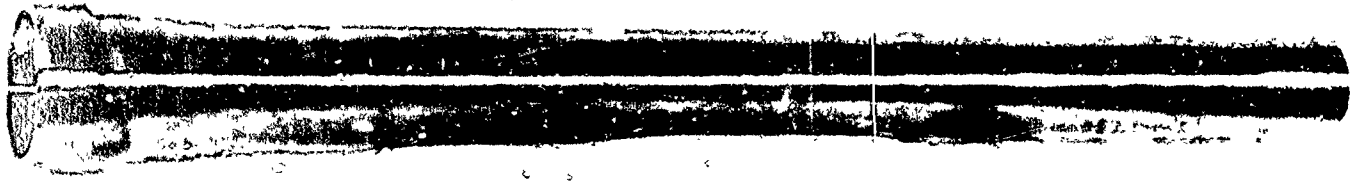

Figure 29 View of Machined 106mm Stub Gun Liner Before Winding

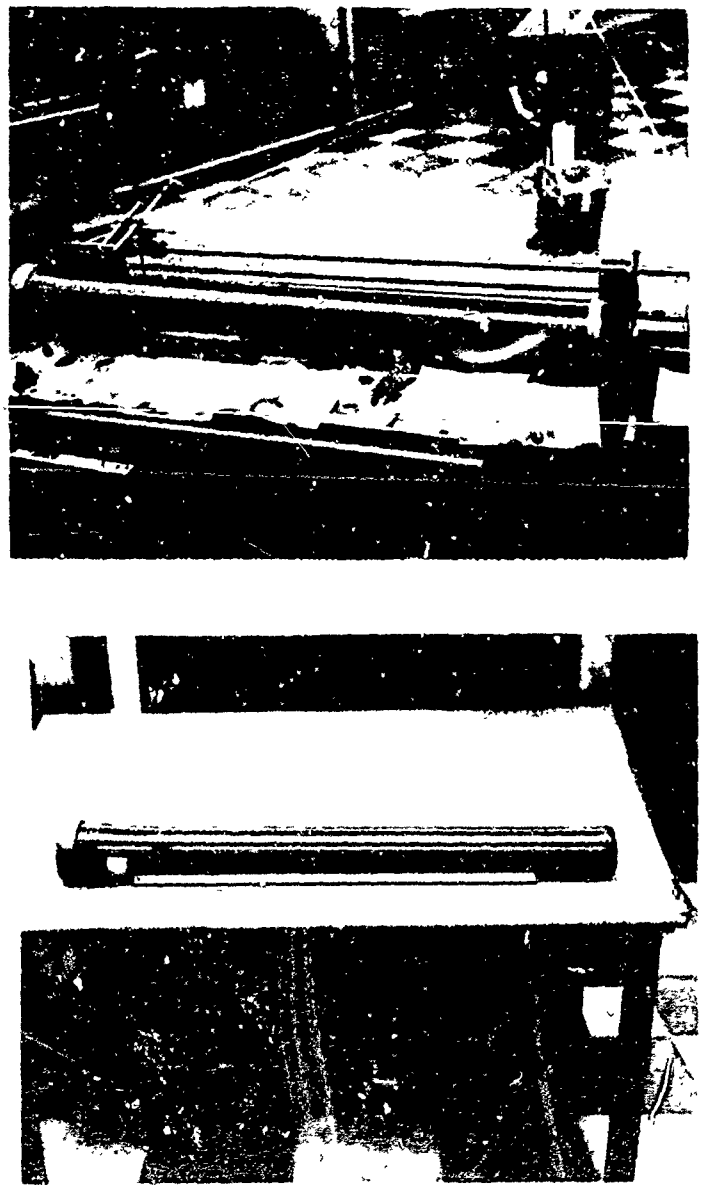

Figure 30 Two Views of 106mm. Composite Stub Gun

The first two layers of hoop windings were laid down the entire length of the liner from the muzzle collar to the breech collar. The next eleven layers were laid down from the muzzle collar to the slope (gradually tapering the lay-downs). The final seven layers were located to build up the chamber area (Figure 31).

After the winding operation, the composite tube was allowed to gel or harden for five hours on the rotating mandrel under the bank of infrared lamps (seven lamps positioned equi-distant along the length of the tube) positioned 6" above the rotating tube. The tube was fully cured in a furnace for three hours at 350°F. The final cured dimensions are also shown in Figure 31.

Test and Results

This stub gun was tested by an actual proof firing performed at Picatinny Arsenal in May of 1971. Two strain and two thermal gages were mounted on the chamber section (90° apart) at a point located 10" down from the breech end (point of maximum pressure). Five standard rounds were fired through this stub gun and the results of these firings are shown in Table XI. Firing was accomplished by supporting the tube in a standard 106mm M79 mount and attaching the conventional 106mm plenum chamber and nozzle. Modifications were made to the mount to accept a 5" clamp centered 13" forward of the plenum chamber threads (Figure 32).

TABLE XI

TEST FIRING DATA: 106mm COMPOSITE R.R. (STUB GUN)

TEST NO.	VELOCITY (FPS)	PRESS. (PSI)	STRAIN - μ INS/IN 6 O'CLOCK	STRAIN - μ INS/IN 12 O'CLOCK	TEMPERATURE (°F) BEFORE	TEMPERATURE (°F) AFTER	TEMPERATURE (°F) ΔT
1	1328	-	2720	3340	-	-	-
2	1316	10,100	2620	-	70	113	43
3	1320	10,000	2720	3250	62	104	42
4	1345	10,300	2750	3440	73	114	41
5	1325	10,000	2760	3160	87	127	40

Report No. RF-266-71

Ammunition Test Branch

Picatinny Arsenal - Dover, N.J.

Data measurements were obtained from following:

Velocity: 30' mean (1st screen 20' from muzzle, 2nd screen 20' from 1st screen)

Pressure: T-18 copper crusher gages inserted into base of cases

Strain: 2 gage types - FAE-25-1256; 120 ohm bridge + 7.5 volts

Temperature: Surface temperature transducer

Ammunition: 106mm M344A1 Inert Round - Lot #MA-17-1

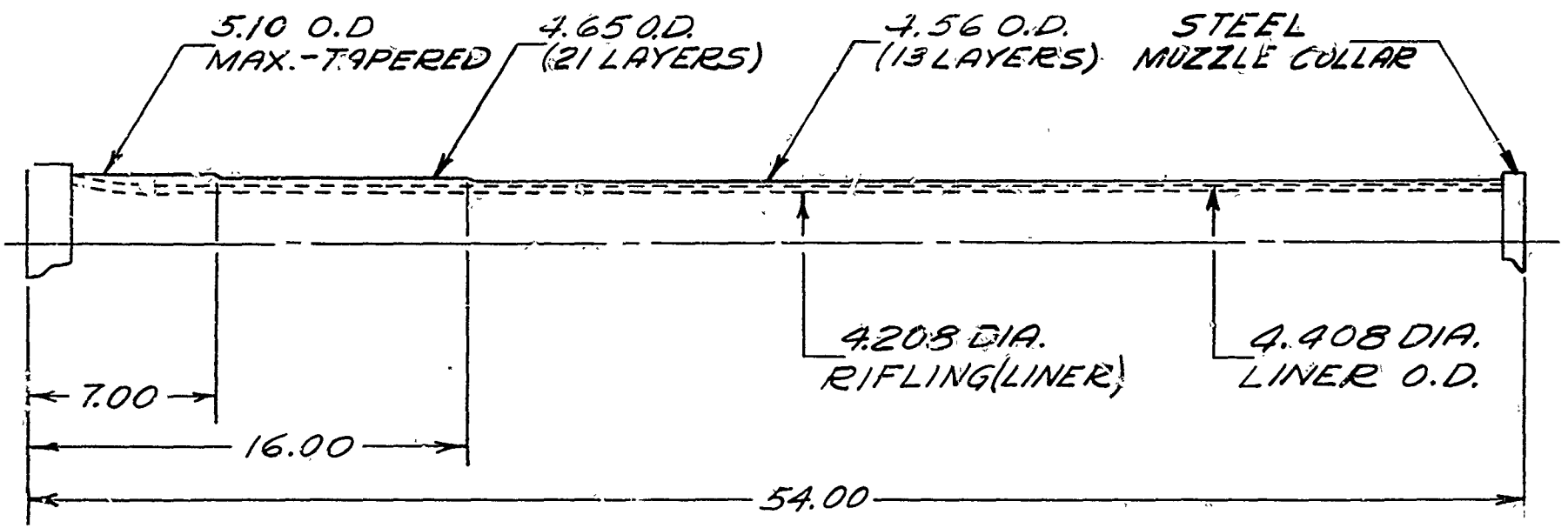

Figure Schematic of 106mm Tube Showing Overall Composite Build-up

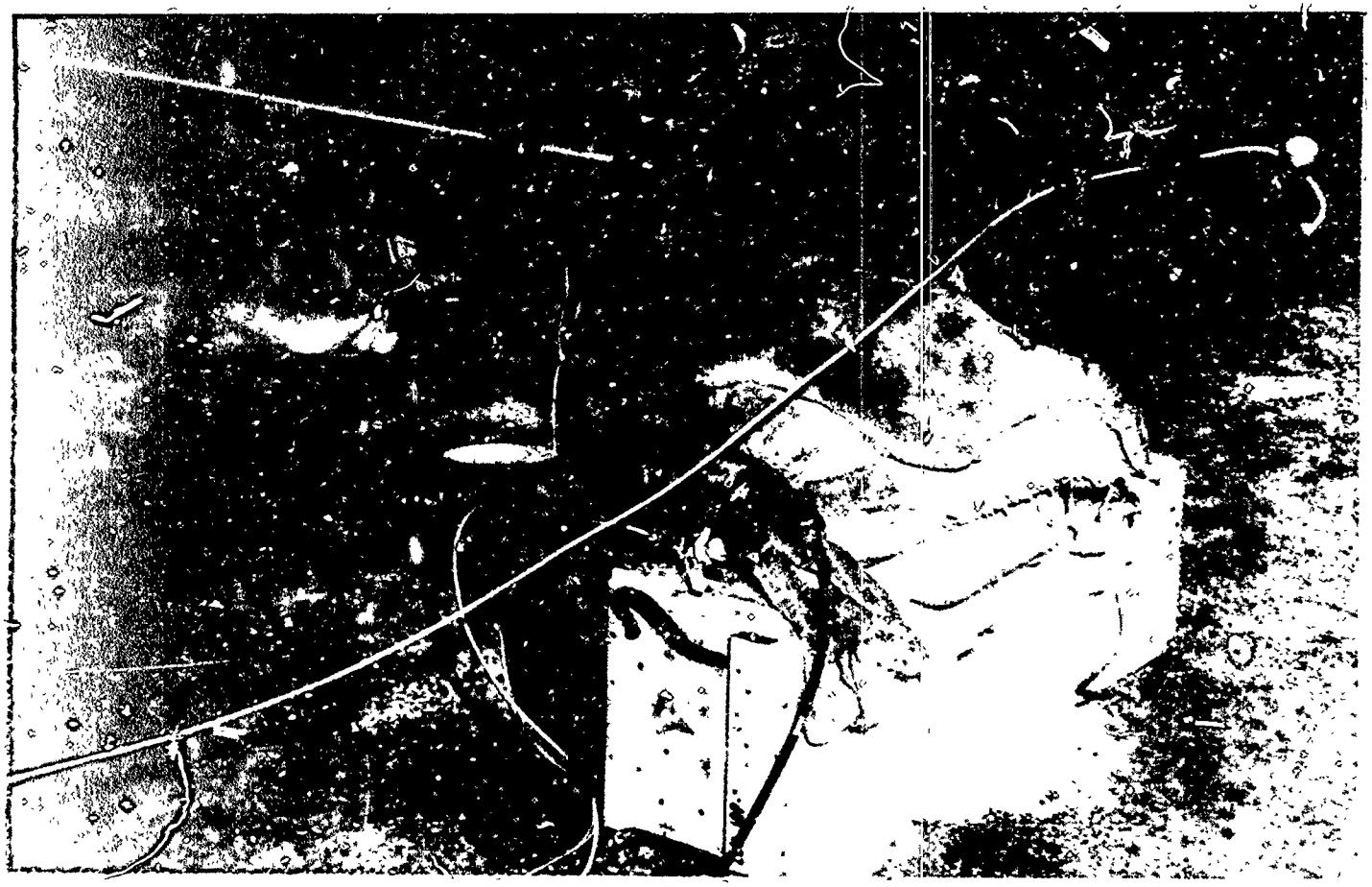

Figure 32 Firing Set-up for 106mm Composite Stub Gun

Some concern was initially felt in the fact that the 0.1" thick steel liner must support more than 100 lbs weight (chamber, nozzle, breech, and projectile) in a cantilever fashion. This, coupled with the fact that the recoil characteristics of such a stub gun were unknown, resulted in the mount and suspended breech section being sandbagged for stabilization. When it became apparent that whipping was not a problem, the bags were removed and the last two rounds were fired with the breech unsupported.

Upon return of the stub gun to the Watervliet Arsenal, the bore was visually inspected via borescope and dimensionally inspected by star-gage. No detrimental effects to chamber and rifling were observed as a result of the test firing, and the tube remained dimensionally stable throughout its length.

CONCLUSIONS

This study has accomplished the objective calling for the establishment of fabrication techniques and design concepts comparable to the present state-of-the-art of composite materials. A novel composite system (steel wire/epoxy) has also been explored and developed to the point that the feasibility of fabricating end items with this system has been established.

Although the steel wire has a relatively high density, its fine diameter, extremely high strength, high modulus, good adhesion, and

very high composite efficiency results in composite materials which show great weight savings over conventional steel and can compete weight-wise with fiberglass composites.

An example of the weight savings that can be obtained from use of this composite system is shown graphically in Figure 33. Here we see a schematic of a conventional 106mm gun tube. Above the tube are drawn two curves:

a. Pressure Travel Curve: This curve graphically depicts the pressures experienced within the tube as the projectile moves down the bore;

b. ESP Curve: The Elastic Strength Pressure which is, in essence, the design strength of the gun tube itself, incorporating all the safety factors needed to withstand over-pressures, and the degradation of material strength which occurs from firing a hot tube.

Below the tube are three lines which predict the percent of weight that can be saved when hoop-wound steel wire composite jackets are used with three different steel liners having thicknesses of 0.163", 0.100" and 0.050" respectively. All three composite tubes are designed to the same ESP curve that was used for the conventional all-steel tube, and have a composite jacket made of 6 mil, NS-355, steel wire (80% by volume) embedded into an epoxy matrix.

CONVENTIONAL TUBE		COMPOSITE TUBE					
TUBE LENGTH	DESIGN WT.	0.163 LINER		0.100 LINER		0.050 LINER	
		WEIGHT	#SAVED	WEIGHT	#SAVED	WEIGHT	#SAVED
*54"	72	55	17 (24%)	*46	26 (36%)	40	32 (45%)
108"	118	96	22 (19%)	79	39 (33%)	66	52 (44%)

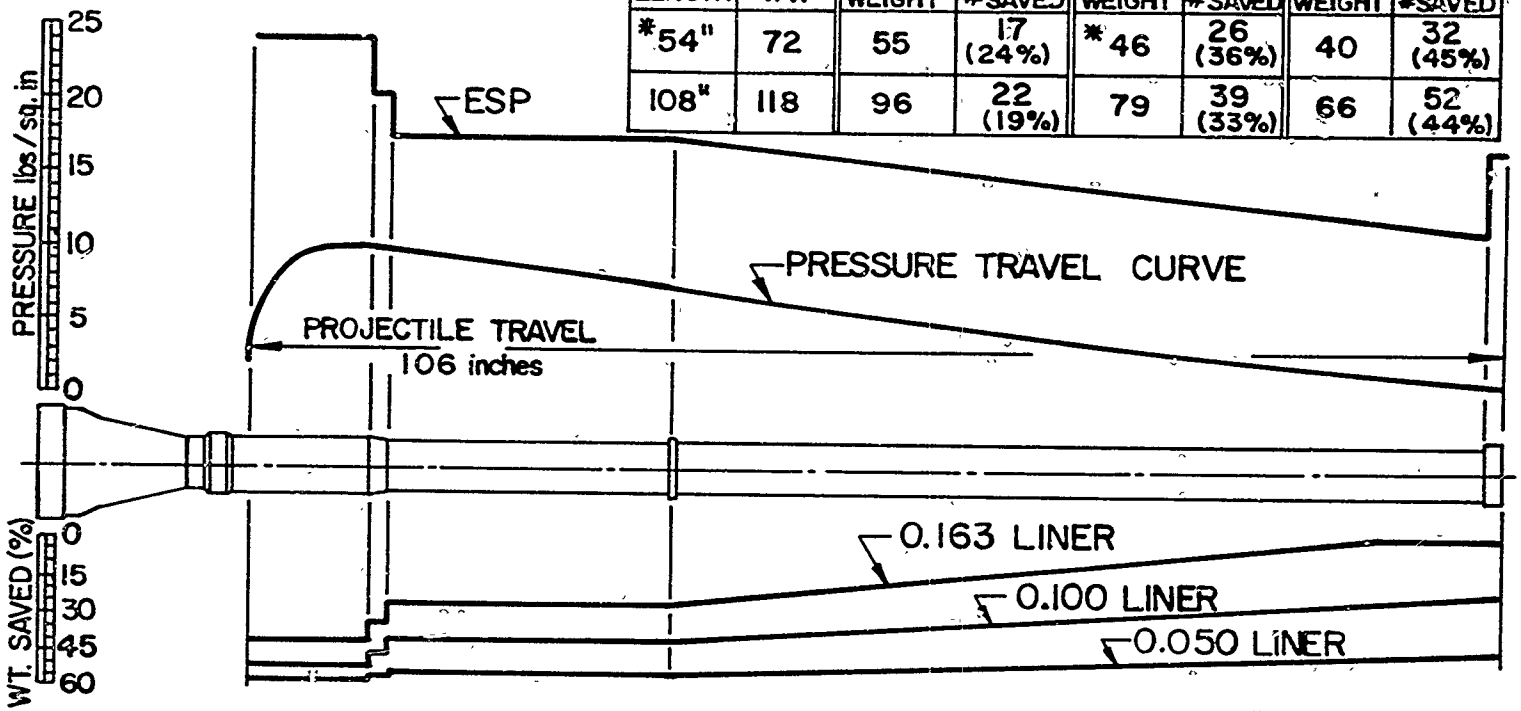

* TESTED AT P.A. 6 MAY, 71		
RDS.	CHAMBER PRESS. psi	MUZZLE VEL. fps
1	10,000	1328
2	10,100	1316
3	10,000	1320
4	10,300	1345
5	10,000	1325

106 mm M40A1 COMPOSITE TUBE

(LINED TUBE WITH STEEL WIRE/EPOXY OVERWRAP)

Figure 33 ESP and Pressure Travel Curve of 106mm M40A1 Conventional Tube Showing Expected Weight Savings When Composite Materials are Used

The chart in the upper right of Figure 33 shows the expected overall weight savings for the three types of composite tubes when fabricated in both 54" (stub gun) and 108" (conventional) lengths. These weight savings were derived from the computer program explained in Appendix C. The weight savings of 41% predicted for the 54" long tube with a 0.100" liner was verified by the stub gun fabrication and test-firing accomplished under this program.

This program has shown that thin diameter steel wire filaments can be handled on conventional filament winding equipment with little or no difficulty. The only major problems experienced were in the machining characteristics of this composite system. This is indeed a major hurdle to overcome and was directly responsible for the extreme difficulty experienced in characterizing this composite system.

The inherent nature of the wire itself leads to most of the characterization problems experienced. It is a very "springy" material which makes it difficult to handle when fabricating flat laminates. When thin laminates (6 plies or less) are prepared, this springy nature of the wire results in a natural twist in the cured laminate itself. This led to difficulties in tab bonding, and alignment in the tensile machine, which could have accounted for the overall low data obtained.

As a composite reinforcement, steel wire can be considered a ductile material and not brittle as is the case with other conventional reinforcements, i.e., boron, glass, and graphite. Therefore, the work required to sever or machine the wires in this composite system is such that it causes cracking, chipping, and separation of the matrix at the cutting interface.

When cut flat laminates are pulled for tensile properties, cracks often run from the machined edge down the length of the fibers, resulting in low test values. Very little success was gained in overcoming this problem and future work should explore newer machining techniques such as electric arc discharge and electrochemical milling to overcome this problem.

For applications where weight is not of prime importance, the use of steel wire as a reinforcement shows certain definite advantages over other reinforcing filaments. Its effective tensile strength is higher than any of the commercially available filaments. Its elastic modulus is three times that of fiberglass and compares favorably with the more exotic boron and graphite filaments.

Resin wetting is quicker and the bond between wire and resin is usually stronger than between most other filaments and their matrices. There is no strength loss due to mechanical damage of the fibers during handling and fabrication. This results in high composite efficiency,

assuring high strength and high modulus composites. There is no loss of strength with time, due to static loading effect in the fiber and, therefore, the material has a superior resistance to cyclic loading compared with glass reinforced composites.

The material is relatively inexpensive, when compared with the price of carbon, graphite, or boron fibers, and should prove to be an extremely useful reinforcement in future lightweight composite gun tubes and related components.

APPENDIX A

A. CALCULATION OF MANDREL WINDING PARAMETERS

1. Determination of Helical Angle: In chain-driven filament winding machines, the helical angle of wrap is determined by the diameter of the mandrel and by the diameter (number of teeth) of the timing sprocket.

For one revolution of the mandrel, the ratio of the mandrel rotational distance ($\pi \times D$), to the carriage traverse distance ($N_s \times L_c$), results in the computation of the helical angle

$$\tan \alpha = \frac{\pi D}{N_s \times L_c}$$

2. Reference 8 (Plastec Report #10) explains in detail the computations of the following parameters which are needed to effectively helically wind a cylinder (Figure 3):

a. Number of sprocket turns/circuit is defined as ratio of total chain links to sprocket teeth:

$\frac{N_c}{N_s}$ and cylinder length (L) is determined by $\frac{N_c}{N_s} = \frac{2L \tan \alpha}{\pi D} + 2y$

where y is 1/2 mandrel turn to traverse one end cap.

b. Total chain length (in number of chain links):

$$N_c = \frac{2L}{L_c} + N_s$$

c. The distance the filament band must be displaced/circuit in order to prevent overlapping. This distance is given by the S_L

$$S_L = \frac{S_n}{\sin \alpha}$$

d. This distance must then be translated into rpms of the timing sprocket and a new R_c must be computed. This new R_c results in a slight change in the helix angle which can be recalculated by:

$$\tan \alpha = \frac{\pi D}{N_s \times L_c \times R_c}$$

e. For complete mandrel coverage, S_c is divided into the circumferential mandrel distance to give the total number of circuits:

$$S_c = \frac{S_n}{\sin (90^\circ - \alpha)}$$

then

$$\frac{\text{circuits}}{\text{layer}} = \frac{\pi D}{S_c}$$

f. Determination of mandrel revolutions per completed layer:

$$\text{Mandrel revolutions} = \frac{N_c}{N_s} \times \frac{\text{circuits}}{\text{layer}}$$

<u>EXAMPLE</u>:

A helically wound fiberglass cylinder of 81mm inside diameter, .090" thick and 40" long is desired. Using 20-end pre-preg glass roving of approximately .080" band width, wound at 54°45', the following parameters are calculated for the mandrel and winding machine:

$$\tan \alpha = \frac{\pi D}{N_s L_c} \quad \text{or} \quad N_s = \frac{\pi D}{L_c \tan \alpha}$$

$$N_s = \frac{3.190\ \pi}{.375\ (1.4150)} = 18.89$$

which must be increased to the next largest whole number (19 teeth).

Recalculation of the helix α gives:

$$\tan \alpha = 1.4066 \; ; \; \alpha = 54°35'$$

To wind cylinder minimum of 40", the minimum N_c/N_s needed is 13/1, thus:

(a)
$$\frac{N_c}{N_s} = \frac{2L \tan \alpha}{\pi D} + 2y$$

$$13 = \frac{2.8132L}{3.19\pi} + 1$$

$$L = \frac{(13-1)\ 3.19\pi}{2.8132} = 42.749"$$

and chain length:

(b)
$$N_c = \frac{2L}{L_c} + N_s$$

$$= \frac{2(42.749)}{.375} + 19 = 247 \text{ links}$$

The longitudinal component of the band width (.080") is calculated:

(c)
$$S_L = \frac{S_n}{\sin \alpha} = \frac{.080}{.8150} = .098"$$

(d) This S_L is used to calculate a new R_c by increasing or decreasing the rpm of the idler gear. For $\alpha = 54°35'$ and band width of 0.080 ins. the new R_c is slightly larger or smaller than the 1:1 ratio.

(e) The circumferential component of the band width would be:

$$S_c = \frac{S_n}{\sin (90° - \alpha)} = .138"$$

and number circuits in a layer for complete coverage would be:

$$\frac{\text{circuit}}{\text{layer}} = \frac{\pi D}{S_c} = \frac{3.19\pi}{.138} = 73$$

(f) Mandrel turns to complete the layer:

$$\text{Turns} \approx \frac{N_c}{N_s} \times \frac{\text{circuits}}{\text{layer}}$$

$$\text{Turns} = 13 \times 73 = 949$$

Computing the mandrel turns is very important because through the use of a counter on the machine, one is able to determine when the completed helical pattern (2 layers) is completed. This is virtually impossible to do visually after the first pattern is finished.

(g) Thickness is obtained by dividing the thickness of one layer (.008") into the desired thickness. Therefore, .090/.008 = 11.25 layers or 12 complete layers. This figure can be continually checked with standard micrometers.

B. MANDREL END CAP DESIGN

When helically-wound layers are utilized in the fabrication of filament-wound cylinders, geodesic end caps must be designed and fabricated on the mandrel to:

a. provide constant tension on all the fibers during winding;

b. assure that the feeding carriage returns back at the same angle that it traversed forward

Figure 34 is a sketch of the end dome and shows the simple calculations needed for designing the end cap for an 81mm cylinder when the desired helical angle is 54.75°.

CALCULATION OF GEODESIC END CAPS FOR TUBE WITH HELICAL

$\alpha = 54.75°$ & $D = 3.190''$

$R_p = R \sin \alpha$

$R_p = (1.595)(.8166)$

$R_p = 1.3025$

$X^2 + R_p^2 = R^2$

$X^2 = (1.595)^2 - (1.302)^2$

$X^2 = 2.544 - 1.695$

$X^2 = .849$

$X = .921$

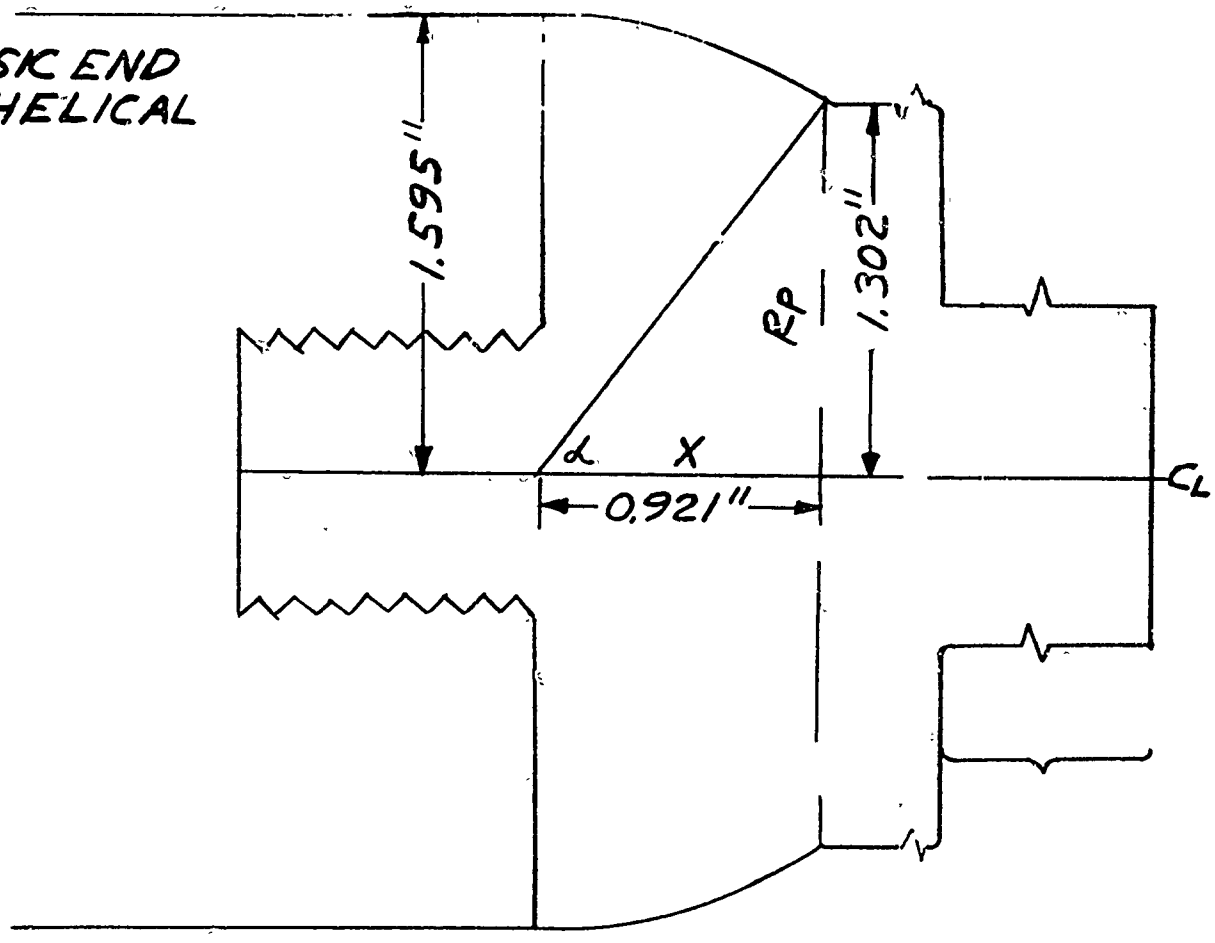

Figure 34 Dimensional Sketch and Required Calculations for Geodesic End Dome Contour of 81mm Mandrel

APPENDIX B

DESIGN CRITERIA UTILIZED IN FABRICATING FILAMENT-WOUND CYLINDERS

The ends/in. technique (netting analysis) used in designing and fabricating the fiberglass liner cylinders was adapted from the work of L. G. Harkins[17].

An example of this technique is shown in the designing of cylinder #60-III which contains both helically-wound glass and hoop-wound steel wire.

As mentioned in the text, a 4:1 ratio of hoop-to-longitudinal stress was desired for these 60mm (2.4 in.) cylinders. The cylinders were originally designed to rupture at 10,000 psi using the following criteria:

A. CALCULATION OF HELICAL WRAPS REQUIRED FOR AXIAL LOAD

Helical Layers:

Ends/in (A) = 352 (large because of an overlap ratio of 1.41)

Helix angle (α) = 55°6'

E-Glass strength = 196,000 psi

Breaking load (F_s) = 3.9 lbs/end

1. Axial load/circumferential inch = $\frac{PD}{8} = \frac{10{,}000 \times 2.4''}{6} = 3000$ lb/in

2. Minimum helix layers required:

$PD/8 = F_s\ A\ L \cos^2\alpha$

$$L = \frac{3000}{(3.9)(352)(.327)} = \frac{3000}{448.9} = 6.68 \text{ layers}$$

The required number of layers becomes 8, the next highest even number. One complete helical coverage results in 2 actual layers. The

17. Harkins, L.G., "A Study of a Glass Filament-Wound Body for the XM20 Gas Generator," Frankford Arsenal Technical Report FA-R-1862, September 1967.

required number of layers exceeds 6 layers or three complete patterns and since it is impossible to efficiently wind 1/2 helical pattern, the next highest even number of layers is required to assure sufficient strength. Therefore, L = 8.

B. CALCULATION OF HOOP WRAPS REQUIRED FOR HOOP LOAD

Hoop Layers:

Ends/in (A') = 176

Steel wire strength = 435,000 psi

Breaking load (F_s') = 12.3 lbs/end

1. Hoop load/longitudinal inch = $\frac{PD}{2} = \frac{10{,}000 \times 2.4''}{2}$ = 12,000 lbs/in

2. Strand strength of helical windings in hoop direction:

   $F_s \sin^2\alpha$ = (3.91lbs/end)(.672) = 2.62lbs/end

3. Helical ends/longitudinal in.

   L A $\sin\alpha$ = (8)(352)(.820) = 2309 ends/in

4. Hoop contribution of helical filaments

   = (2.62lbs/end)(2309 ends/in) = 6050lbs/in

5. Total load to be taken by hoop windings

   = 12,000lbs/in - 6,050 lbs/in = 5950lbs/in

6. Hoop load which can be supported by one layer of hoop wraps is

   A' F_s' = (176 end/in)(12.3lbs/end) = 2165lbs/in

7. Total layers of hoop winding is:

   5950/2165 = 2.75 layers or 3 layers

All the cylinders used in this test were designed in the same manner. However, the actual rupture strength of the all-glass cylinders greatly

exceeded their predicted strength. An extensive tensile testing program was begun on 48 impregnated roving samples taken from 8 different rolls (from the same manufacturer's lot number) as per ASTM (D 2343-67). This data indicated that the average impregnated strand strength was 275,000 psi rather than the original estimate of 196,000 psi. This original estimate came from previous samples received from the same manufacturer.

This increase in glass strength to 275,000 psi increased the predicted strength of all these cylinders as shown in the example below:

CYLINDER 60-III

E-Glass (helically wound)	Steel Wire (hoop wound)
$A = 352$ ends/in	$A' = 176$ ends/in
$\alpha = 55°6'$	$\alpha = 0°$
Filament strength = 275,000 psi	Filament strength = 435,000 psi
or; $F_s = 5.4$ lbs/in	or; $F_s = 12.3$ lbs/in
$L = 8$	$L' = 3$

1. Strand strength of helical windings in hoop direction:

   $F_s \sin^2\alpha = (5.4)(.672) = 3.63$ lbs/end

2. Helical ends/longitudinal inch:

   $L\ A \sin\alpha = (8)(352)(.820) = 2309$ ends/in

3. Hoop load contribution from helical windings:

   (3.63 lbs/end)(2309 ends/in) = 8,382 lbs/in

4. Hoop load contribution from hoop windings:

   $A'\ F_s'\ L' = (176)(12.3)(3) = 6494$ lbs/in

5. Total hoop load carried by both helical and hoop layers:

   8382 lbs/in + 6494 lbs/in = 14,876 lbs/in

6. $PD/2 = 14,876$ lbs/in

$P = 12,397$ psi (predicted rupture strength)

For the metallic liners, titanium and steel, a similar design technique was utilized. The liner's contribution to the hoop load was determined and by the end/in method, the thickness (layers) of composite jacket needed to contain the desired pressure was computed. An example of this is shown below in the computation of the theoretical burst strength of OCL-1, the 106mm steel liner test cylinder.

Assume: (a) no burst strength contribution from the liner beyond its yield strength, and

(b) the use of the thin wall equation is valid

A. Liner contribution to cylinder burst strength

$\sigma = Pr/t$; where $\sigma = 160,000$ psi (yield strength)

$r = D/2 = 4.208/2 = 2.104$ in

$t = 0.100"$

Burst pressure (P) = 7605 psi

B. Composite jacket contribution to cylinder burst strength

where; Wire tensile strength = 457,000 psi

Breaking load (F_s) = 12.9lbs/end

Ends/linear in (A) = 151.6 end/in

No. of layers (L) = 23 layers

a. Hoop load carried by jacket is given by;

$F_s A L = (12.9)(151.6)(23) = 44,980$lbs/in

b. Burst strength;

$PD/2 = 44,980$ where $D = 4.408"$ (the O.D. of 0.103" liner)

$P = (44,980)2/[illegible] = 20,408$ psi

Predicted cylinder burst strength = 20,408 + 7,605 = 28,013 psi

Actual burst pressure from test was 29,000 psi

In addition, the computer design program shown in Appendix C, was utilized to confirm the above design technique.

APPENDIX C

DESIGN OF A 106MM M40A1 COMPOSITE TUBE

The results of this study have been obtained from the Digital Computer IBM 360/40H.

The computer program used in designing the 106mm tube is on file in the Computer Laboratory at the Watervliet Arsenal under the title of, "GUNTU II: Design of Composite Gun Tubes When the Liner Dimensions are Given."

This program determines, theoretically:

(a) The jacket dimensions of a composite gun tube consisting of a given liner thickness (or inner cylinder) and a jacket (or outer cylinder) of dissimilar materials when subjected to an internal pressure.

(b) The economic success of the composite tube when compared to an all-liner material tube.

The purpose of Appendix C is to inform the reader, through an example, of what is needed to design a composite tube. Detailed information on the program is found in Reference 18.

EXAMPLE:

Design a 106mm M40A1 composite gun tube: The tube consists of a steel liner and a composite jacket made of steel filaments embedded into an epoxy matrix. Obtain weight savings for 0.163, 0.10, 0.05 inches steel liner thicknesses having a steel wire epoxy jacket (70% vol wire).

18. D'Andrea, G., "Composite Cylindrical Pressure Vessels Related to Gun Tubes. Part II: Minimum Weight Design" Watervliet Arsenal Technical Report WVT-7125, August 1971.

COMPUTER INPUT FOR 0.100 (IN) LINER THICKNESS

SX	=	.8	-	BOL starting value
DX	=	.05	-	"Step By" to find a root
EP	=	.001	-	Tolerance on the function
EPX	=	.001	-	Tolerance on the bound of X
NPA	=	10	-	Number of internal pressures
PARY (N)	=	.0375, .0500, .0625, .0750, .0875, .1000, .1125, .1250, .1375, .1500 (Non-dimensional) internal pressures		
N CASE	=	1	-	Number of cases
IA	=	2	-	Values of constants are calculated in CYCLIN
N	=	1	-	Number of values of filament volume ratio
DAK	=	.70	-	Filament volume ratio
NALP	=	1	-	Number of angles of wrap
DIST	=	2.	-	Distance separating values of alpha
AK	=	.70	-	Filament volume ratio
C	=	80.	-	Weight-penalty factor
A1	=	1.	-	Composite tube fabrication cost ($)
A2	=	1.	-	Conventional tube fabrication cost ($)
TL	=	1.	-	Tube length (inches)
B	=	1.048	-	Liner radius (dimensionless)
EL	=	30000000.	-	Modulus of elasticity liner (psi)
ETAL	=	.283	-	Density of liner (#/in^3)
SIGO	=	160000.	-	Yielding strength of liner (psi)
UNL	=	.3	-	Poisson's ratio of liner
DPPL	=	.5	-	$/pound of liner

COMPUTER INPUT FOR 0.100 (IN) LINER THICKNESS (Cont'd)

EF	=	30000000.	- Mod. of elasticity of filament (psi)
ETAF	=	.279	- Density of filament (#/in^3)
SIGF	=	450000.	- Yielding strength of filament (psi)
UNF	=	.28	- Poisson's ratio of filament
DPPF	=	8.	- $/pound filaments
FIL 1, etc	=	Steel liner/Steel-Novalac	- Combination title
EM	=	450000.	- Modulus of elasticity of matrix (psi)
ETAM	=	.044	- Density of matrix (#/in^3)
SIGM	=	10000.	- Yielding strength of matrix (psi)
UNM	=	.36	- Poisson's ratio
DPPM	=	1.50	- $/pound matrix

The OUTPUT for this design is displayed in a graphical form on Figure 33. This figure shows:

a. The Elastic Strength Pressure (ESP) curve; the pressure produces an equivalent stress in section wall equal to the allowable stress of the gun tube material at 70°F.

b. The ballistic pressure travel curve.

c. The weight saved versus travel curve for a 0.163", a 0.100" and a 0.05" liner.

NOTE

1. The computer OUTPUT displays (Figure 35):

(a) The input data of physical constants and cost per pound of material used.

COMBINATION OF METALLIC LINER (STL.) - STEEL-NOVALAC JACKET

EL =30X10^6	ETAL=.283	SIGMAO=175,000	NUL=0.30	DPPL=0.50
EF =30X10^6	ETAF=.279	SIGMAF=400,000	NUF=0.28	DPPF=8.00
EM =.45X10^6	ETAM=.044	SIGMAM= 10,000	NUM=0.36	DPPM=1.50
K =.400	ETAJ=.185	C= 10.00	A1=1.00	A2=1.00
RHO=B	B=1.04	TL 1.00		
ALPHA=0.0				

PA	DPA	BO	PB	WF	REV YIELD	BOL	WFAL	DPIN	F	CPC	CPAL	FC
.03	7,577	1.043	.003	.130	NO	1.045	.142	.054	.08	0.71	1.41	0.0
.05	10,104	1.053	.015	.153	NO	1.061	.194	.125	.21	1.40	3.29	0.0
.06	12,630	1.064	.028	.176	NO	1.078	.248	.198	.29	1.93	4.78	0.0
.07	15,155	1.076	.040	.200	NO	1.095	.306	.274	.34	2.35	6.00	0.0
.08	17,681	1.087	.052	.226	NO	1.113	.366	.352	.38	2.69	7.04	0.0
.10	20,207	1.099	.065	.252	NO	1.132	.430	.434	.41	2.97	7.94	0.0
.11	22,733	1.112	.077	.279	NO	1.151	.497	.520	.44	3.21	8.74	0.0
.12	25,259	1.124	.090	.308	NO	1.171	.569	.610	.46	3.41	9.44	0.0
.14	27,785	1.138	.101	.337	NO	1.193	.646	.703	.48	3.59	10.09	0.0
.15	30,311	1.152	.114	.369	NO	1.215	.727	.803	.49	3.74	10.68	0.0

NOTE:

1. IF BORE RADIUS "A" IS KNOWN, TABLE VALUES ARE MODIFIED BY MULTIPLYING
   (A) "B", "BO" & "BOL" BY "A"
   (B) "WF", "WFAL" & "DPIN" BY "A^2"
   (C) & DIVIDING "FC" BY "A^2"

2. IF CPC IS LESS THAN CPAL + FC, THE COMPOSITE TUBE IS CHEAPER THAN AN ALL LINER MATERIAL TUBE

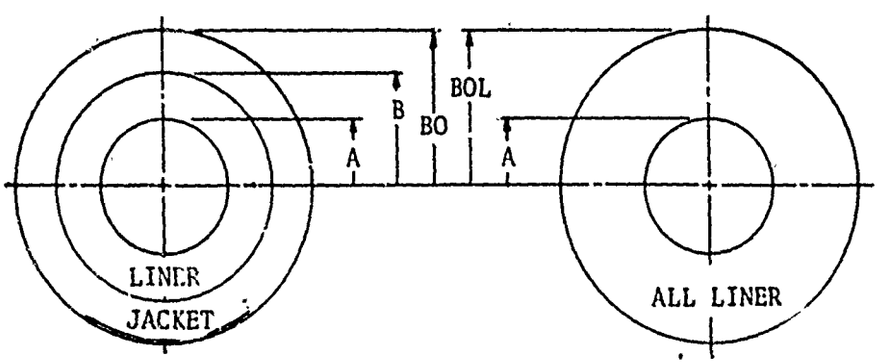

Figure 35 Typical Output Data from GUNTU II Computer Program

(b) Tubes' Characteristics:

PA	=	Dimensionless pressure capacity
DPA	=	Pressure in psi
B	=	Outside radius of liner
BO	=	Outside radius of jacket
PB	=	Interface pressure at B
WF	=	Composite weight factor
REV YIELD	=	Reverse yielding check
BOL	=	All liner outside radius
WFAL	=	All liner weight factor
DPIN	=	$/in of composite tube
F	=	Fractional weight saved
CPC	=	Left side of Equation (28)-(Reference 17)
CPAL	=	1st term of right-hand side of (28)-(Reference 17)
FC	=	2nd term of right-hand side of (28)-(Reference 17)

2. Symbols CPC, CPAL, and FC are explained in detail on Page 12 of Reference 17. Note 2 on Figure 27 shows how to interpret the economic analysis.

3. $$PA = \frac{(\sqrt{3})(DPA)}{(2)\ (SIGO)}$$

4. $$WF = WFAL = \frac{\text{Weight/unit length}}{(\pi)\ (ETAJ)}$$

ETAJ = Jacket Density (#/in^3)

17. Harkins, L.G., "A Study of a Glass Filament-Wound Body for the XM20 Gas Generator," Frankford Arsenal Technical Report FA R-1862, September 1967.