AD

SA GROUP TECHNICAL
PAPER TP 2-72

AD 741366

UNITED STATES ARMY
COMBAT DEVELOPMENTS COMMAND
SYSTEMS ANALYSIS GROUP

FORT BELVOIR, VIRGINIA 22060

MONOGRAPH ON INTELLIGENCE, COMMAND AND CONTROL ATTRIBUTES FOR SYSTEM ASSESSMENTS

D D C
MAY 3 1972
C

MARCH 1972

Reproduced by
NATIONAL TECHNICAL
INFORMATION SERVICE
Springfield, Va. 22151

APPROVED FOR PUBLIC RELEASE-DISTRIBUTION UNLIMITED

UNCLASSIFIED

Security Classification

DOCUMENT CONTROL DATA - R & D

(Security classification of title, body of abstract and indexing annotation must be entered when the overall report is classified)

1. ORIGINATING ACTIVITY *(Corporate author)*

US Army Combat Developments Command
Systems Analysis Group
Fort Belvoir, VA 22060

2a. REPORT SECURITY CLASSIFICATION

Unclassified

2b. GROUP

3. REPORT TITLE

Monograph on Intelligence, Command and Control Attributes for System Assessment

4. DESCRIPTIVE NOTES *(Type of report and inclusive dates)*

5. AUTHOR(S) *(First name, middle initial, last name)*

MAURICE H. SIMPSON

6. REPORT DATE

March 1972

7a. TOTAL NO. OF PAGES

38

7b. NO. OF REFS

13

8a. CONTRACT OR GRANT NO.

b. PROJECT NO.

c.

d.

9a. ORIGINATOR'S REPORT NUMBER(S)

TP-2-72

9b. OTHER REPORT NO(S) *(Any other numbers that may be assigned this report)*

10. DISTRIBUTION STATEMENT

Approved for Public Release--Distribution Unlimited

11. SUPPLEMENTARY NOTES

12. SPONSORING MILITARY ACTIVITY

13. ABSTRACT

Fundamental to military systems assessments and assessment models is the postulation that there are military capability requirements that can be achieved or improved by some military systems either better or worse than other military systems in accordance with some predetermined criteria and/or economic preferences. In order to be meaningful to the decision maker combat effectiveness evaluations must include assessment of the information-intelligence-command-control couple.

The author develops and presents four theses addressing the surveillance-reaction operations wherein the I-I-C-C is simulated and linked into the overall ground combat system. The system example is the Army organizations.

Portrayed in the paper are techniques uniquely adapted to assessment, exploration, and measurement of the organization and message process (communications and command transmission), the forcing function of the command system (the decision process), and a way to link (control) and analyze synergetic and interactive component effects.

Demonstration is by present and historical surveillance, target acquisition, night operations (STANO) systems.

DD FORM 1 NOV 65 1473 REPLACES DD FORM 1473, 1 JAN 64, WHICH IS OBSOLETE FOR ARMY USE.

Security Classification

Security Classification

14. KEY WORDS	LINK A ROLE	LINK A WT	LINK B ROLE	LINK B WT	LINK C ROLE	LINK C WT
Command						
Control						
Intelligence						
Communications						
Surveillance						
Target Acquisition						
Night Operations						
Reliability						
System Effectiveness						
Functions						
Functional Block Algebra						
Decision						

Security Classification

SIGNATURE PAGE

Technical Paper TP-2-72

Systems Analysis Group
US Army Combat Developments Command
Fort Belvoir, Virginia 22060

MONOGRAPH ON INTELLIGENCE, COMMAND AND CONTROL ATTRIBUTES FOR SYSTEM ASSESSMENTS

by

MAURICE H. SIMPSON

Reviewed by:

MARION R. BRYSON, PhD
Technical Director

HERBERT J. CHILDRESS, JR.
Colonel, ADA
Commanding Officer

TABLE OF CONTENTS

		Page
ABSTRACT		iii
I	INTRODUCTION AND SUMMARY	1
II	DISCOURSE	1
III	THESIS I. THE ARMY'S ORGANIZATION AND INFORMATION SYSTEMS ARE CANONICAL	2
IV	THESIS II. THE RELIABILITY OF AN INFORMATION MESSAGE IS A DECISION CRITERION	10
V	THESIS III. DECISION AND UTILITY THEORIES ARE MOST APPROPRIATE TO SYSTEM ASSESSMENT	14
VI	THESIS IV. STRICTLY FUNCTIONAL BLOCK DIAGRAMS RATHER THAN PHYSICAL COMPONENT ANALYSIS ARE MOST USEFUL TO DESCRIBE AND EXPLORE SURVEILLANCE AND REACTION SYSTEMS	26
VII	CONCLUSIONS	34
VIII	REFERENCES AND BIBLIOGRAPHY	35
IX	DISTRIBUTION	36
FIGURES		
1.	SCHEMATIC OF THE STANO FUNCTION	3
2.	TREE STRUCTURE REPRESENTATION OF AUTHORITY	4
3.	A CANONICAL ORGANIZATION WITH ADDITIONAL INFORMATION FLOW	7
4.	ILLUSTRATION OF A METHOD TO DISPLAY AND ANALYZE ORGANIZATIONAL PERFORMANCE EFFECTIVENESS	9
5.	COMMAND TRANSMISSION CHANNEL	13

		Page
6.	BLOCK DIAGRAM OF STANO SYSTEM	27
7.	BLOCK DIAGRAM OF WW II AND KOREA STANO SYSTEM	31
8.	BLOCK DIAGRAM OF SEA STANO SYSTEM	32
9.	BLOCK DIAGRAM OF A FEASIBLE STANO SYSTEM	33

ABSTRACT

Fundamental to military systems assessments and assessment models is the postulation that there are military capability requirements that can be achieved or improved by some military systems either better or worse than other military systems in accordance with some predetermined criteria and/or economic preferences. In order to be meaningful to a decision maker, combat effectiveness evaluations must include assessment of the information-intelligence-command-control couple. A cogent example is surveillance and target acquisition. It is axiomatic that any system assessment model covering such operations must simulate this couple because it is elemental to the total process of detection, acquisition, verification, transmission, and response from initial encounter through attack. Modeling of this couple has not been too successful.

The author develops and presents four theses addressing the surveillance-reaction operations wherein the information-intelligence-command-control couple is simulated and linked into the overall ground combat system, in order to overcome the modeling difficulty.

The four theses and techniques developed therefrom -- uniquely adapted by the author to assessment of systems -- portray the organization and message process (communications), the decision process (the forcing function of any command system) and a way to link (control) and analyze synergetic and interactive system component effects. The system example is the Army -- with demonstrations of present systems and historical systems.

The techniques will successfully provide methodology that can be used for analysis and assessment of intelligence-command-and-control systems and processes.

MONOGRAPH ON INTELLIGENCE, COMMAND AND CONTROL ATTRIBUTES FOR SYSTEM ASSESSMENTS

I. INTRODUCTION AND SUMMARY

This research paper is based on observations of the author which evolved while he was engaged in evaluations of Army STANO (surveillance, target acquisition, night operations) technology while a member of the Institute of Special Studies. He was led to research in order to fill voids and gaps in the knowledge and understanding of the necessary intra-blending of intelligence/command/control in Army land combat systems. His developments are expository in nature and addresses those critical elements for application to systems assessment and assessment models. As a result he was led, necessarily, to develop techniques for synthesizing systems and subsystems in order to gain insight into elemental and total effects *in situ*, as it were, in intelligence-command-and-control system networks.

The paper is organized in this manner: Section II discourses on the problem as it relates to surveillance-reaction operations. In Section III the author describes Army's organizational and information systems using some of Farmer's (Rand Corp, reference 1) communications/decision network concepts and develops therefrom a method to display and analyze organizational performance effectiveness. In Section IV he explains the uniqueness of the intelligence-command-and-control message cycle vis-a-vis Army communication systems, using and building on Farkas' (IDA, ref 2) previously developed concepts of properties of command transmission systems. In Section V utility theory is used to demonstrate assessment of effectiveness of STANO systems. In Section VI he pursues the use of functional block diagrams and "block algebra" to describe and explore surveillance-reaction systems and demonstrates the technique with examples using World War II, Korea, and SEA STANO-intelligence systems.

II. DISCOURSE

Fundamental to military systems assessments and assessment models is the postulation that there are military capability requirements that can be achieved or improved by some military systems either better or worse than other military systems in accordance with some predetermined criteria and/or economic preferences. Because materiel systems have been easiest to handle, most systems assessment models have been locked in on hardware systems, and the coupling of the system components of

information-intelligence-command-control have not been modeled with any success. This problem has to be addressed since it is common knowledge that breakdowns in the information and intelligence gathering processes cause breakdowns in the management and control structure resulting in defaulted missions.

In order to be meaningful to a decision maker, land combat effectiveness evaluations must include assessment of the effectiveness of the information-intelligence-command-control couple. To do so an assessment model must include the following:

- Information acquisition, transmission, and processing into intelligence.
- Information/intelligence transfer points, decision points, and decision criteria.
- Command transmission.

A cogent example is surveillance and target acquisition, or in Army terms, STANO. It is axiomatic that any system assessment model covering such STANO operations must simulate the above couple because they are elemental to the total process of detection, acquisition, verification, transmission, and response from initial encounter through attack.

Figure 1 is a schematic of the STANO function and portrays necessary interfaces.

In the following exposition the author develops and presents four theses addressing the surveillance-reaction operations--three are from information, communication, and decision theory--and one from servomechanism theory. The four theses and techniques developed therefrom--uniquely adapted in the paper to the assessment of systems--portray the organization and message process (communications), the decision process (the forcing function of any command system) and a way to link (control) and analyze synergetic and interactive effects of system components. The system example is the Army.

III. THESIS I

The Army's organization and information systems are canonical; i.e., can be represented by a tree which is the canonical form of unambiguous authority relationships. The most important product of this methodology is that organizational levels for decision can be evaluated for responsiveness to time constraints and time tradeoffs. This is an adaptation

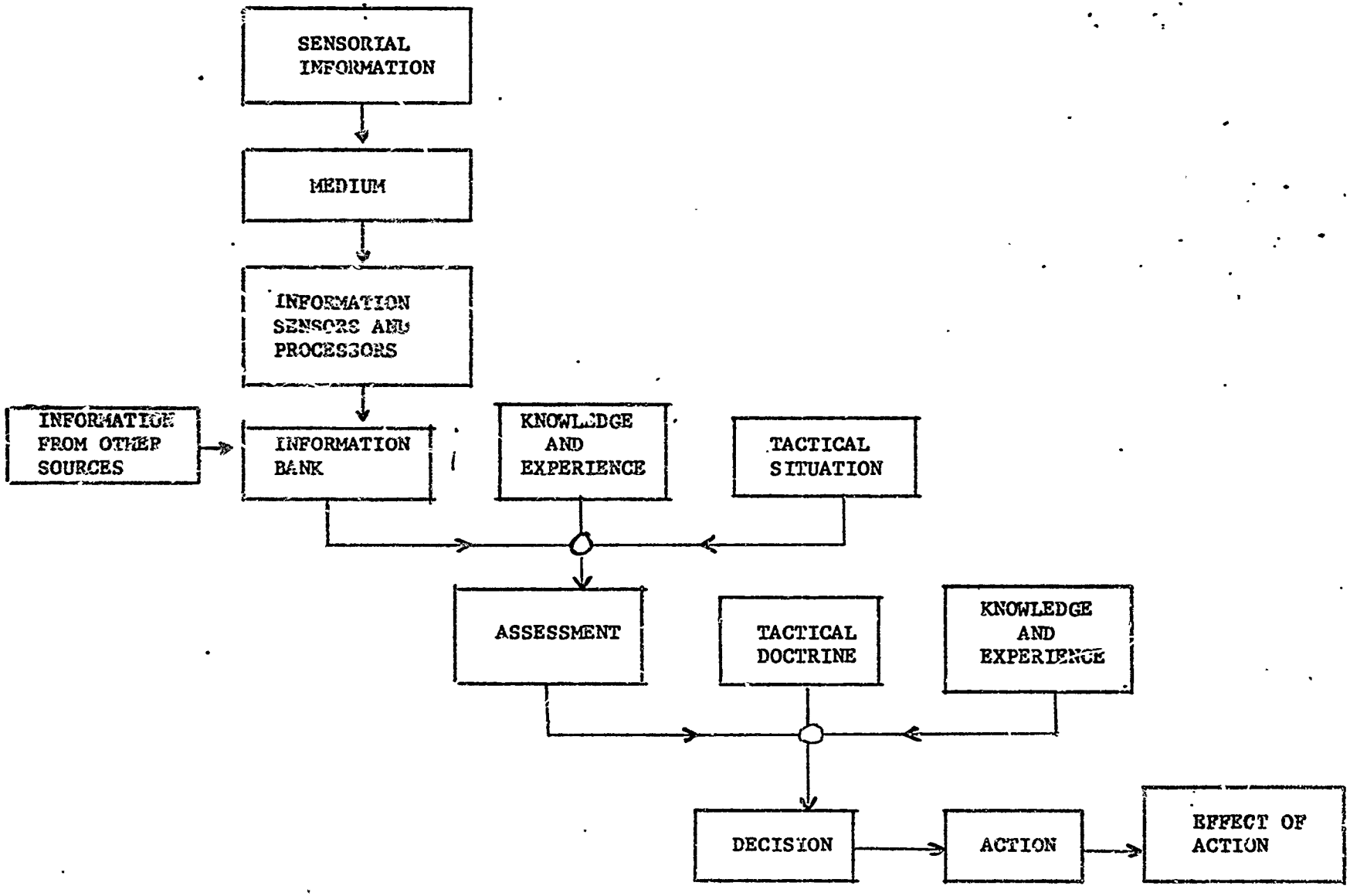

FIGURE 1. SCHEMATIC OF THE STANO FUNCTION

developed by the author from the canonical description by Farmer (Rand Corp. 1961*).

a. Concept. A field army is a canonical (authoritative) organization. As such it can be represented by a tree which is the canonical form of unambiguous authority relationships; i.e., a tree is a set of points connected by lines in such a way that there is one and only one path between any two points, and that path will not be a topological circle. Figure 2 is such a tree.

If the points are considered as representing individuals or sub-organizations called units, and the directed lines as authority relationships, the principle of unity of command places one restriction on the authority relationship: There may be only one relationship.

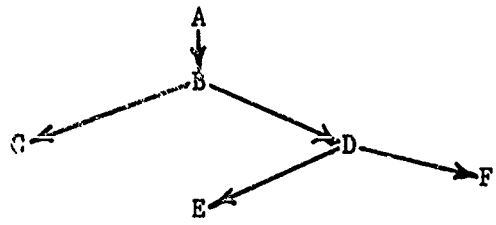

Figure 2. Tree structure representation of authority.

"It is important to understand the difference between 'policy,' 'direct decisions,' and 'indirect decisions'; the policy is definitely at the 'top man' position, as might be the direct decision, but the other nodes, such as 'D' are points of direct or indirect decisions." Direct decisions might be to use linear programming for the processing of intelligence, maximizing cost-effectiveness.

A policy is the result of a decision; it is a selected course of action for which a decision maker is required. For example, a policy statement may require that detection of enemy movement must be verified by two different types of sensors. There is readout from two of the same type of sensors and the information is disregarded. This is an indirect decision; it is logically determined from the policy statement. On the other hand, a policy statement may be that detection of enemy movement should be verified by more than three sensors. Should a detection by four of the same type of sensors be reported? The decision maker is guided by the policy statement, but he does have a decision.

Many points in an organization are often considered to be decision points when in fact the decisions have been made elsewhere; they are merely relays for that decision. Contingency planning is used for this

* The concept and description are extracted from Reference 1.

purpose. When a specific contingency is recognized*, then a specific reaction takes place as the result of an indirect decision, not a policy.

b. Constraints on the Canonical Organizational Structure

In the STANO command/communications/control situations the decision maker is part of an information process whereby it can be assumed that the maximum information which can be assimilated by him is $\underline{I}$ information units per unit time and his output is $\underline{P}$ units per unit time. Since the organization is canonical (tree structured) it follows that, in a tree structure,

$$r = \frac{I}{P}$$

because if $r\,P > I$, the decision maker would have more information than his input capacity. Where b is the branching ratio (b is always an integer), it also follows that b must be less than or equal to r.

Two constraints have now been made on the STANO organizational structure:

The structure must be a tree.

The branching ratio is $b \leq r$

c. Efficiency and Flow of Information

Since the definition of efficiency is Output/Input then the efficiency of the STANO information system is:

$$\frac{P}{I} = \frac{1}{r}$$

Where $b \leq r$, then Efficiency $\leq \frac{1}{b}$ which indicates that Efficiency varies indirectly with b. This is intuitively satisfying.

The primary flow of information in an organization is from the bottom level to the top, and it is this flow that is restricted by the information input rate**.

---

* Recognition of the contingency is a decision. This decision can also be an indirect decision by enumerating objective and measurable phenomena to classify the contingency (a typical STANO situation).

** One of the problems of a high span of management may be this specific information flow problem.

If information flow through the STANO organization were instantaneous, the number of levels would be determined by the restriction of r and b and economic considerations. But there is a delay as the information passes through a node (a point with both an information input and output).

The number of levels, h, in an organization with n units and branching ratio b is then determined by.

$$N \geq b^{h-1}$$

If the delay of a message at each level is t, then the delay from the unit to top point would be ht; from the unit to the top point and back (2h-1) t. Thus the transit time will be excessive to any point if either the number of levels, h, is large, or the time delay, t, is large.

If the maximum transit time is T, the maximum number of levels is $\frac{T}{t} = h$.

The maximum volume of communication in a unit time, Cmax, in an organization with a uniform branching ratio b and h levels is:

$$Cmax = P\ (b^1+b^2+b^3+\ldots b^{h-1})$$

$$Cmax = P \sum_{i=i}^{h-1} b^i \quad \text{(ref 1)}$$

If a communication, as an average, has a path of d branches, then the total originated communication is Cmax/d information units. The volume of communications which are then merely relayed is by definition, d - 1/d Cmax. As d decreases the volume of relayed communications decreases, and the volume of originated communications increases.

The reduction of d is analogous to decentralization in organization. As the source and the decision maker are separated by fewer nodes, that is, as the path length for communication is shortened, the total originated communications increases. Thus decentralization of authority not only represents a quicker reaction time (since the average total time delay is (2d-1) t instead of (2h-1) t, but a reduced communication volume.

By means of this relationship d sometimes can be used as an index of centralization. However, since the number of levels in various organizations differ, it is most times more useful to use d/(h-1) as the index

of centralization. A completely centralized organization would then have an index of centralization of 1, and a completely decentralized organization an index of 0.

d. Multiple Strata Organization

The organizational delay problem can be solved by modifying the organizational (tree) structure by providing a path for information flow between levels more than one apart. Figure 3 illustrates this by the dashed lines.

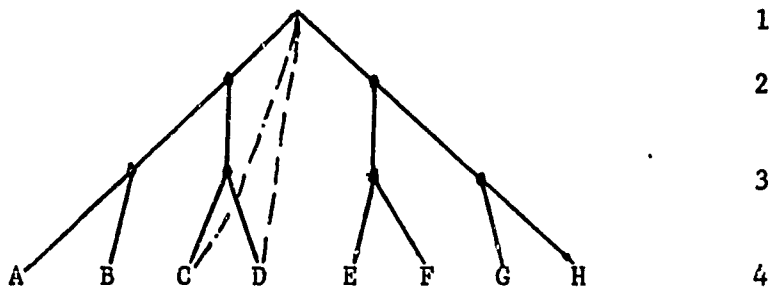

Figure 3. A Canonical Organization With Additional Information Flow.

As long as this is only a flow of information and not decisions, the principles of unit command and scalar organization are not violated. The results of such an organization will provide that information from C and D will arrive at level 1 with a delay of t time units. The same information will arrive at level 2 with a delay of 2t time units. Level 1 has therefore perception of events before level 2.

When the constraints of communication preclude the use of a simple tree structure for organization, the points can be organized into two or more tree structures such that the same points may be found in several structures. Such is the organization of the Army. The example in Fig. 3 is a tree structure of three points, one on level 1, two on level 4, superimposed on a structure of 15 points on 4 levels.

For precision, each of the sub-structures will be called a stratum, and the sum of the strata is the organization structure. A new function is created for each of the nodes belonging to more than one stratum. This is a switching function. As information passes through the node, a decision must be made on which stratum communication should flow. Thus creation of additional strata causes an additional set of decisions for the node. Furthermore, the path is no longer unique. If decisions, or directives, are passed down a structure of more than one net, there may be more than one authority relationship. This violates the scalar principle and the principle of unity of command.

It is possible to have one organizational stratum for information passing up the structure, one for decisions, and one for information passing down the structure, roughly following the seeing, deciding directing functions of STANO and reaction firepower. But this introduces switching problems.

In communicating information between two points on the same level in the Army, it is necessary that at least two transmissions and one additional higher level be used. Most times this form of communication is inefficient in terms of time and volume of information. Therefore, it may be desirable to permit lateral communication on the same level. This may reduce communication time and total communication volume, but creates multiple paths with attendant aggravation of switching problems. Informal organization, as it is often identified presents the primary disadvantage of the difficulty in controlling communication through the structure. If too much of the communication takes place in such a stratum then the more formal stratum needs to be modified. Such modification can be accomplished by means of a reduced branching ratio, or span of management to reduce the total information input to any node.

e. Techniques for Exploiting The Canonical Concept

(1) Criteria of Decision. The important elements in the sequential decision process at the decision making nodes are the following:

°A terminal decision. This is a selection of the course of action, the decision, which will terminate at that specific node the sequential decision process.

°A continuation decision. This is a decision between continuing to obtain information, with attendant time delay and cost, and making a terminal decision.

The cost of making a wrong decision is discussed in THESIS III*. In general, obtaining information is continued until the incremental cost of obtaining information exceeds the incremental decrease in expected cost of a wrong decision. The criteria of determination of this tradeoff point is time----time allowable for processing the information plus time for reaction. In practice, in the Army in the field, the continuation decision is often made through reluctance to make a decision rather than a conscious consideration of increasing the accuracy of the decision by using additional time and accepting the cost of additional information. The techniques following will provide insight and evaluation to help understand and use time as the tradeoff factor.

* See pp 17 - 19.

(2) Analysis*

CRITERIA / ORGANIZATIONAL LEVEL	Criteria #1 $b \leq r$	Criteria #2 $h-1$ $n \leq b$	Criteria #3 $(2h-1)\ t$ or $\frac{T}{t}$	Criteria #4 $d/\ (h-1)$
Squad				
Platoon				
Company				
Battalion				
etc.				

FIGURE 4. Illustration of a Method to Display and Analyze Organizational Performance Effectiveness

As logically consistent t is a prime consideration in the sequencing process of:

- Seeing
- Deciding
- Directing

It is also logically consistent that the time available to make an effective decision and reaction is highly dependent upon the necessary set up and response time of the reaction means. The commander must have information of sufficient detail, accuracy, and timeliness to permit him to apply force against the enemy. I and P are dependent upon the constraints of the means and media used for sensing, transmission, observation, and implementation in the command transmission channel. I and P are both dependent upon the reliability of the sensing means and the transmission means.

* Development of this Monograph, not Farmer's.

As a by-product of the methodology for canonical organizations, optimal organizational levels for decision can be evaluated for responsiveness to time constraints. Criteria #4 (decentralization index (d/h-1) and Criteria #3 (average total time delay (2h-1)t or maximum number of levels $\frac{T}{t}$) are most pertinent.

IV. THESIS II

The reliability of an information message is a decision criterion. The reliability addressed is twofold: the reliability of the message as well as the reliability of the transmission channels. When addressed this way the whole network is then considered; i.e., (1) the sensing, acquisition and identification nodes, (2) the communication information flow and the intelligence gathering process, (3) the command, control, and reaction process, and (4) the organization to accomplish the above three sequential processes. Since the function of command is to cause a desired action, it must be provided with information necessary to select a particular message from all possible messages. Thus, the command channel is really addressing one and only one command message to be transmitted. This approach is in contradistinction to the Shannon model which represents a stochastic source transmitting a large number of symbols on a probabilistic basis. The author's developments are based on the work of Farkas (IDA, 1965).

a. The concept of reliability measurement generates implications and ramifications in the command and control channels. For instance FARKAS stated that the design of a command transmission channel which will be used for only a single message or a small number of messages (the STANO situation) involves considerations not necessarily the same as those of a general transmission channel (ref 2). Furthermore, he also stated that the specification of an error probability must be carefully considered so that the probability of receiving an effective message is maximized. This concept of error probability is inherent in system reliability measurement for when a device system has a life, the probability of its functioning throughout the time interval (o,t) is just the probability of its functioning at t.

b. Specifications of a Command Transmission System. (Ref 2) The transmission of command information consists of the performance of a sequence of events regardless of the media or mode of the transmission. This sequence must be understood for clarification of several important points*. Given a command transmission system it must:

Step 1. Establish the relative desirability of all possible results (states) and select the most desired state.

* From FARKUS, ref 2.

Step 2. Observe and/or estimate the state of the system with no command transmission (i.e., with the null-command).

Step 3. Estimate the action required to achieve the desired state on the basis of a knowledge of the system's characteristics.

Step 4. Select and transmit the symbols of the message which will accomplish the required action.

Step 5. Receive the symbols and determine the corresponding message.

Step 6. Perform the action specified by the received message.

Step 7. Arrive at a new state.

c. Distinguishing Features of A Command Transmission System. We distinguish between messages, Mi; actions, Ai; and states, Xi, by considering that a message causes an action which results in a change of state. The state is defined to be any variable in which we are able to express a cost or effectiveness measure. For example, if a fire reaction causes a change in movement velocity/direction of an infiltration penetration, thereby causing a change in the infiltrators location, we can consider the state variable as either the changed velocity or location. The choice of state variable is completely dependent upon the coordinate in which we wish to express a cost or effectiveness and may even reduce to message or action variables.

It is not desirable to assume that the purpose of the channel is to transmit a large number of such commands; in fact, in many applications a command channel is established to transmit one and only one command message. As such then, Shannon's model* which represents a stochastic source transmitting a large number of symbols on a probabilistic basis is not a valid one. The information measure we seek should be capable of describing the quantity of information transferred by a system which may only be called upon to transmit a single message. Once we have accomplished this, then we can investigate the properties of the information measure as a function of successive commands.

d. Distinguishing Model of A Command Transmission System. Is it reasonable to consider a single command transmission system basis for an information measure? Consider a two-command system in which the

* The Mathematical Theory of Communication, 1949.

destination can arrive at a state X as the result of a first command and a state Y as a result of the second command. Two situations may arise; Y may be dependent on X or Y may be independent of X. If Y is dependent on X, then we may consider an equivalent single message consisting of all possible combinations of the first and second messages as resulting in the final state, Y. If Y is independent of X, then it is indeed reasonable to first consider the information measure on the basis of X and Y individually, and then to consider the amount of information contained in a sequence of independent (single or combined) commands.

The model of a command transmission system contains all of the elements of the general communication channel. (See Fig. 5.) Since the function of the command is to cause a desired action, the "information source" must be provided with the information necessary for it to select a particular message from all of the possible messages. A convenient mechanism for doing this is to provide a conceptual feedback channel which enables the source to estimate the state of the destination for each of the possible received messages. In this context we consider a conceptual feedback channel in that each possible message results in a possible state which becomes known to the source. Furthermore, to assist the source in the determination of the state resulting from each possible message, we provide a means for measuring the system.

The observed coordinates may be the state variable itself or they may require a transformation (prediction) to yield the state variable.

The procedure by means of which the information source selects the particular message to be transmitted is one in which the desirability of each possible transmission is evaluated. We can consider an Effectiveness Function incorporated within the feedback channel which assigns a "cost" or "value" to the successive states which are predicted as a consequence. Considering the Effectiveness Function, it is possible that the same value will be assigned to many of the possible states. For a single command message the Effectiveness Function depends only on the evaluation of the relative desirability of having the destination arrive in a particular state. A source is represented here as a device which, on the basis of the knowledge supplied by the feedback channel, determines and provides the appropriate message to the channel. The extent of the knowledge which can be supplied by the feedback channel will be related to the source's a priori uncertainty to the desired message.

The most important distinctions between the model of the command transmission system and the model of a general communication system (Shannon) are the following:

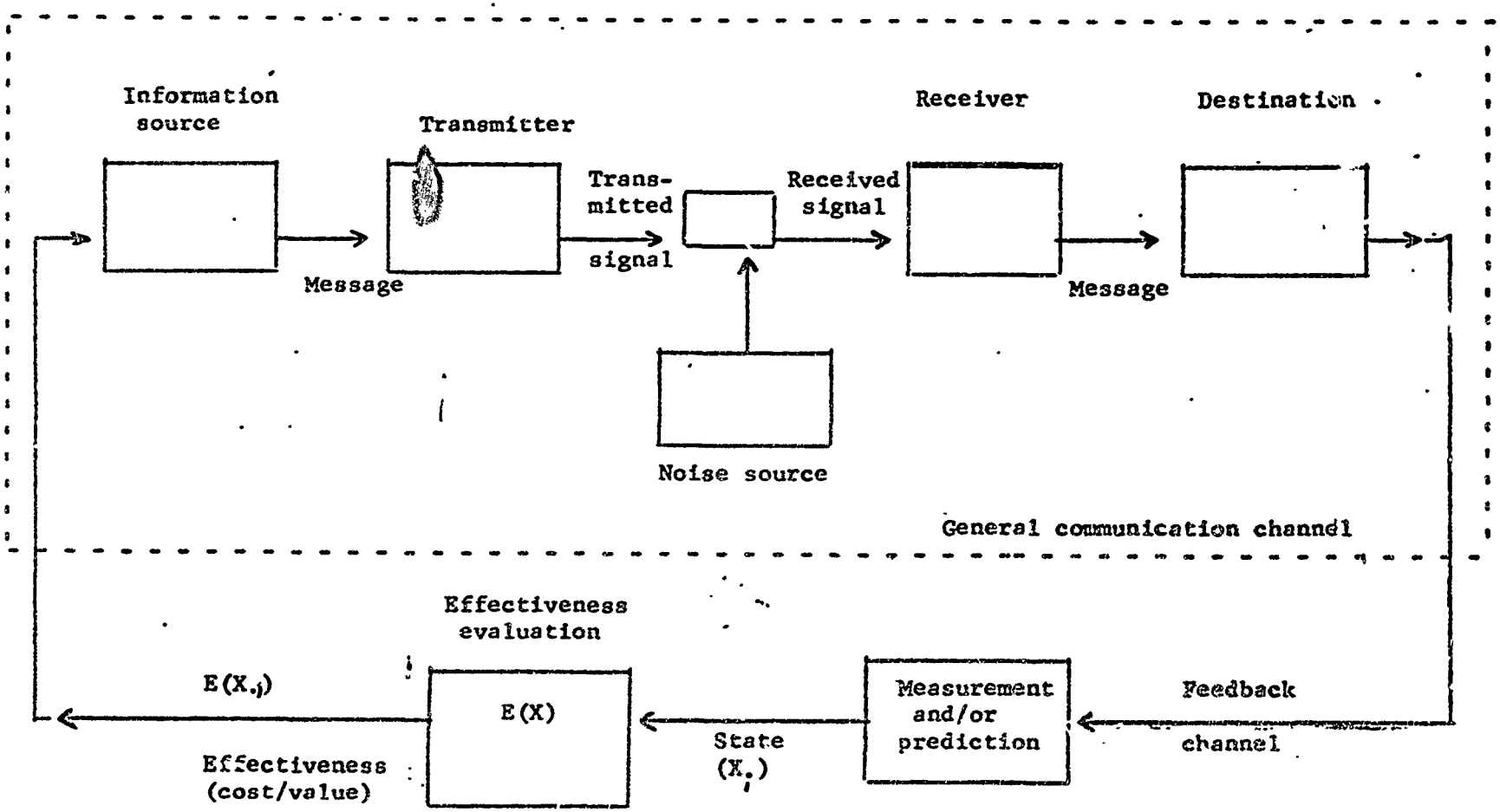

FIGURE 5. Command Transmission Channel

• The source is not considered to be a purely stochastic process of symbols only on the basis of some probability distribution.

• The "destination" is not merely a recipient of symbols; it is an active agent whose actions depend on received messages.

• The command transmission system is used to transmit a single message in order to accomplish a desired objective, not an endless stream of symbols restricted only by the probability distribution.

V. THESIS III

Decision and utility theories are most appropriate to systems assessment. The basis of this thesis is, for instance, that there are two decisions in surveillance-reaction operations: one when it is possible to measure the risk function characterizing the performance of the equipment (e.g., reliability of the STANO devices); the second is when the risk function cannot be measured but must be assessed (e.g., underkill or overkill of targets). Two major aspects are addressed: command and control and uncertainty, and utility as an effectiveness concept.

Limitations within the concept are tested for sensitivity to risk and subjectivity. The development and adaptation are the work wholly of the author.

a. Concept. There are two decision areas in such situations. These areas are essentially related to risk functions. One is applicable when it is possible to measure directly the risk function characterizing the performance of the materiel: this is most apparent at the operator position. The second is where the risk function cannot be measured but must be assessed. Exact solution of this problem consists in finding an *a posteriori* distribution of unknown parameters and subsequent averaging of distributions containing these parameters. This is at the decision making nodes.

b. A Description of the STANO Situation. It is practicable to address Army's surveillance, target acquisition and night observation operations in a discursive manner analogous to Sweat's "A Duel Involving False Targets," in the OR Journal, May-June 1969 (ref 3). For example, a penetration/infiltration/ambush situation is initiated by the enemy force who chooses the time t in the time interval $(-T,0)$. The interdiction probability is P_k if the defender responds with his k weapons at the time of detection, and it is $\sigma_k < P_k$ if he responds after some finite time interval. The defender may or may not detect the penetration/infiltration/ambush at the time of initiation or may detect "false targets." The probability density of detection of false targets

at any time t is λ (t) for all t in (-T,0). The payoff is the defender's probability of interdiction until $\underline{t}$ = o (including the possibility of penetration/etc., at $\underline{t}$ = o). If the defender expends his weapons on a false target or does not expend his weapons when there is a real target, he suffers a decrease in his interdiction probability. Thus, the defender desires to respond to a detection and the classification of the target in a manner that will maximize the payoff. In turn, the enemy force wishes to select the time of penetration/etc. that takes maximum advantage of the defender's tendency to fire at false targets; thus, he desires to minimize the payoffs.

c. Proposition. Decision theory, as an operations research technique, is most appropriate to the STANO situation because it entails measurements of uncertainty and payoffs in the process of interdiction. Evans (HumRRO) in his study "Risk-Taking Set and Target Detection Performance," 1965, concluded that, for instance, radar detection performance can be regarded as a decision task (ref 4). One question that can be asked, however, is: Are decision and utility theories and techniques sufficiently developed and reliable? The proposition of this study is that they are. The following sections illustrate and substantiate some of their useful techniques.

d. Command and Control and Uncertainty. The general form of an operations research model will express a surveillance, target acquisition, night operations system as a function of a set of variables of which at least one is subject to control. The general form is as follows:

$$E = f(x_i, y_i)$$

It is obvious that surveillance, target acquisition and night observation systems and devices all follow the essential processes of communication and control in their operations. Involved is information as a general concept, meaning any sign or signal which the organization could employ for the direction of its activities. The information might be an electric impulse, a chemical reaction, or a verbal or written message; very generally, anything by which an organization could guide or control its operation.

The node points of the process are the decision points wherein surveillance, target acquisition, or night observation decisions with risk have to be made. The risk is evaluated at the point where there is the man-machine interface, (regardless of organizational level); i.e., man is at the decision point and is the decision maker. This is the point where the decision maker looks backward to the sensors systems and forward to the reaction forces or firepower.

The types of possible risk are:

- There is the risk of rejecting information when it is actually true.

- There is the risk of accepting information when it is actually false.

- There is the risk of underkill or overkill of targets.

These risks are ever present regardless of quantity/quality of information provided. The degree of risk can be evaluated, however, through the type and mix of STANO equipment and organization as will be shown in the following paragraphs.

Measurement of changes in risk as affected by various mixes and target importance is the unknown quantity as far as the status of STANO systems today. Experts agree that military judgement can assist in establishing such changes in risk; so can field troop evaluations. But <u>how to</u> is the main problem.

e. <u>Development of Utility as an Effectiveness Concept</u>. In STANO objectives there is a loss in effectiveness if an action is taken and not needed; and there is also loss in effectiveness if an action is not taken and found later to be needed. These losses are considered to be losses in attaining STANO objectives and can be used as measures of effectiveness. This is a utility concept wherein utility is defined to be the power to satisfy objectives in a preferred manner.

Basically when utility is a satisfaction (or preferred) value of success (or failure) usually it is possible to compare a number of alternatives to determine which yields the greatest amount of utility. Possible, probable, and likely situations can be simulated by devising rational arrangements of actions. The interaction of these strategies with possible outcomes that could occur may not be controlled but can be simulated. Using simulation of strategies with simulation of possible outcomes, a payoff relation can be devised in terms of probability of occurrence and utility. From these a comparison evaluation can be made that can provide a "best" choice based on preferred criteria.

Even so, let us examine this postulate a little further. The general case in utility theory is the following fundamental relationship:

$$E_u = u_1p_1 + u_2p_2 + \ldots u_np_n$$

where E_u is the expected value of overall utility and where $o < p < 1$.

The total expected value in a chance situation is the sum of the products of probable events and the cost (gain or loss) of each of these events. In a more reduced form this relationship is as follows:

$$E_u = \sum_{i=1}^{n} u_i P_i$$

Considering this fundamental relationship, the specific STANO situation can be developed addressing the following considerations:

- Possible validity and reliability of information communicated by and through sensor systems, night vision devices, etc.

- Possible action/reaction to the communicated information.

- Possible effects caused by use of sensors on action taken.

It is obvious that the second and in some cases the third can be controlled but the first cannot.

Considering the first there are, however, only two possible situations as follows:

- There is actual movement/presence of enemy personnel or vehicles or there is an imminent enemy threat, moving or not.

- There really is no movement/presence of enemy personnel or vehicles or there is not an imminent enemy threat, moving or not.

The importance of the target to the defender influences all considerations. The fundamental decision situation remains, however, in whether to act or not when confronted with a piece of information about the enemy. Entailed in this decision is the question of what will be gained or lost in terms of the decision maker's objectives and preferences if certain actions are taken.

This is a "decision making under risk" situation which leads into a special case of utility theory as follows:

$$U(S_n) = \sum_{i=1}^{n} u_i P_i \ (a_i/N_k, S_n)$$

$U(s_n)$ is the overall utility, "a_i" is the controlled possible action variable, "N_k" is the possible situation which cannot be controlled,

S_n is a strategy of actions, "u_i" is the cost in utility for each possible action and "p_i" (where $0 < Pi < 1$) is the probability of occurrence). This is based on the principle that if we know of no reason for probabilities to be different we consider them to be equally likely.

This relationship states in its symbolic manner that an assessment of effectiveness $U(S_n)$ can be gained by summation ($\sum$) of possible effects on objectives (u_i) times the probability (p_i) of certain effects on the outcome on given actions (a_i) provided certain possible situations occur (N_k). This then, can be simulated (game played) by introducing S_n (Strategy/Simulation).

In order to use this model we need to have alternative actions (a_i) that can be controlled. In STANO applications there are three possible actions the decision maker can take as follows:

a_1 ... Do not respond - consider that the signal is spurious.

a_2 ... Do not respond - wait for additional signals to confirm. (Introduces time lag.)

a_3 ... Respond immediately.

Then, there are two possible situations that can be encountered regarding the enemy as the result of communicated information:

N_1 ... There is actual movement of enemy personnel or vehicles, or there is an imminent enemy threat, moving or not.

N_2 ... There is no movement of enemy personnel or vehicles, or there is not an imminent threat. (False Alarm, Spoof)

Simulation (S_n) can be accomplished by considering that there are three possible actions and two possible outcomes or 3 X 2 possible combinations. The steps of the technique are to construct a gain/loss table and then a payoff matrix.

The utility factors (u_i) are fundamental to the whole concept. These are the subjective part of the proposition and are part of the essential step where rational judgement is applied. However, this is also the step that can make the measurement of effectiveness be intuitively acceptable and have operational significance. The choice of utility factors is influenced by these basic questions:

- What will be gained by taking or not taking a specific action against a specific occurrence if that occurrence <u>does</u> in fact happen?

• What will be lost by taking or not taking specific action against a specific occurrence if that occurrence <u>does not</u> in fact happen?

All penalties for mistakes are implied in both questions. Decision sensitivity to mistakes can be illustrated, as an example by the following table:

		Nothing There in Fact	Something There in Fact
LOSS	Large	Big Action	Underkill
	Medium	Medium Action	Overkill or Underkill
	Small	Light Action	Overkill or Underkill
	Unknown but a loss	Communicated positive sensing to others	No Action
GAIN	Large	---	Action destroying
	Medium	---	Action neutralizing
	Small	---	Action partially neutralizing
	Unknown but a gain	No Action	Action Correct with effect unknown

This assessment table is essentially based upon evaluation by likely positive actions and enemy use of their unassailed combat power. It also considers response vs target importance, and overkill and underkill.

Evaluating the factor for utility (loss or gain) is then influenced by the situation and concomitant actions to combat the situation. Each has its own weight of merit: No matter what the perspective is--be it that of the field commander, or that of the planner--the utility evaluation always is relative to some comparison base; e.g., dollars cost, combat casualties in men and materiel, advantages lost or gained, overkill or underkill, effects on future possible actions--in other words, is measured in terms of objectives and preferences and not by abstract numbers.

Finally, there is the probability of occurrence. One way to approach this (considering STANO) is to apply the concept of reliability--the probability that a STANO system will perform its intended mission. (False alarms then will be considered to be unreliability, 1 minus reliability.) Mixes of equipment/and or organization then can be applied by using assessment of reliabilities. Reliability data can be derived in initial phases of development from manufacturer's characteristics for materiel, from materiel reliability tests, in engineering tests from intuitive reliability for organization or employment, and from troop and combat testing.

This is not an oversimplification. It makes use of engineering and experienced military judgment. It can consider equipment capabilities and mixes of equipment--placed in a simulation process tailored to any threat. It follows that such arrangements can be field and combat tested. Further ramifications are that human factors (considering man to be a component of the system) under various environments can be included.

f. Effectiveness. In summary, the model $U(S_n) = \sum_{j=1}^{n} u_i p_i(a_i/N_k S_n)$ is presented whereby STANO effectiveness can be measured in terms of payoff relationships. It should be understood that the following basic assumptions govern the validity of this model:

(1) That the STANO equipment is within the technical capability of the forces to operate and maintain.

(2) That the logistics and supply channels are adequate.

(3) That man is at the decision point and is influenced by objectives and preferences.

The explanation of the model in STANO terms is as follows:

Let a_i = possible actions that can be taken as a result of information provided by the STANO system.

N_k = possible state that cannot be controlled; e.g., the information is real, it may be a false alarm, or it may not indicate the true nature of the target.

R_i = reliability of STANO system as assessed by engineering and military expert judgment.

u_i = utility evaluation relative to some comparison base; e.g., dollars cost, combat casualties, advantages lost or gained, future possible actions lost or gained--i.e., in terms of objectives.

S_n = Simulation.

$U_{(sn)}$ = total expected utility or effectiveness of the STANO system; i.e., payoff.

Z_i = reliability or unreliability of the system.

Before any "payoff" can be resolved, however, the following three tables need to be constructed as steps in the process:

I. Construct a "loss table" where:

(a) N_1 ... is the state where there is actual movement of personnel or vehicles.

N_2 ... is the state of a false alarm.

(b) The possible actions to take are:

a_1 ... do not respond to the information.

a_2 ... do not respond immediately to the information--wait for confirmation.

a_3 ... respond immediately.

(c) The evaluation of effect of action in loss in utility of objectives if the action taken proves to be wrong. These are judgment values of the military planner assessing the effects of actions. They could be weighted in different ways but they are dependent upon the evaluator's preference or goals.

Construct the loss table as follows from (a), (b), and (c) --

Possible State	Possible Actions a_1	a_2	a_3
N_1	u_1/N_1	u_2/N_1	u_3/N_1
N_2	u_1/N_2	u_2/N_2	u_3/N_2

II. Construct a probability assessment table as follows:

Possible State	Probability Assessment Z_1	Z_2	...	Z_n
N_1	R_x	R_y	...	R_z
N_2	$1-R_x$	$1-R_y$	....	$1-R_z$

where R_x, R_y, and R_z are reliability assessments from engineering data and judgment, or user's judgment.

III. Construct a simulation table where S_n represents the possible simulations that can be arranged. For instance one simulation could be to take action a_i regardless of what the probability assessments are. In any case there are $(a_i)^{N_k}$ possible arrangements.

The payoff matrix can then be constructed and is made up as follows:

Col 1. Simulation	Col 2. Possible State	Col 3. Loss in Utility per Possible Action	Col 4. Action Probability	Col 5. Expected Cost of Utility
S_n	N_k	u_i per a_i	z_i per a_i	$U_{(s_n)}$

which will provide $U(S_n)$ = elements of Col 3 X elements of Col 4.

$$= \sum_{j=1}^{n} u_i \, p_i \, (a_i/N_k, S_n)$$

g. Sensitivity. Considering the complications of military systems of men and materiel in the field, and surveillance, target acquisition, and night observation systems in particular, it is useful to consider the latter as a subsystem of the first. Addressing this subsystem, and considering sensitivity, the following areas have to be examined:

(1) Sensitivity to reliability assessment (probability factors).

(2) Sensitivity to utility assessment (judgment factors).

Reliability is a meaningful way to aggregate some of the parametric measurements in STANO evaluations because it addresses all components of a system. This is explicitly shown in the fundamental reliability relationships.

(a) Series System. $R_s = R_1 \times R_2 \times \ldots R$ where 1, 2 ... n are components of the system. i.e. $R_s = \prod_{i=1}^{n} R_i$

(b) Parallel System. $R_s = 1 - \left[(1 - R_1)(1 - R_2) \ldots (1 - R_m)\right]$ where 1, 2 ... m are components of the system.

i.e $R_s = 1 - \prod_{j=1}^{m} (1 - R_j)$

(c) Series - Parallel System. Where there are m subsystems in parallel and each subsystem consists of n components in series, then:

$$R_s = 1 - \prod_{j=1}^{m} \left(1 - \prod_{i=1}^{n} R_{ji}\right)$$

There is a linear relationship between reliability prediction and payoff expected. This is intuitively satisfying.

Consider that E_i is the expectation of effectiveness, R_i is reliability or probability of performance, and i = 1, 2, ... n, then it follows that linearly: $E_i = A_i + B_i R_i$ where A_i, B_i are constants.

Then the first derivative of Ei with respect to Ri is as follows:
$\frac{dE_i}{dr_i} = B_i$ which means that there is a constant relationship (or slope) between E_i and R_i. Relevancy of this slope to decision is that there are three areas of interest: (1) the pessimistic (the avoidance of risk), (2) the conservative, and (3) the optimistic (the risk taking).

Changes in reliability (increases or degradation) will have effects as follows:

1. The avoidance of risk mode has a negative slope, i.e., the higher the real reliability of the system proves to be, the lower the

payoff in objectives. This means that the decision of no response by friendly forces can influence an increase in enemy forces probability of attainment of enemy objectives.

2. The conservative mode has essentially a zero slope which means that the payoff will remain (for friendly or enemy forces) the same regardless of the real reliability of the system.

3. The risk taking mode has a positive slope which means that degradation of reliability results in degradation in payoff for the friendly forces.

The effects of judgment can be evaluated by considering how changes in utility alters the expectation. Given that:

$$u_i E_i = u_i (A_i + B_i R_i)$$

then

$$u_i \frac{dE_i}{dR_i} = u_i B_i$$

Changes of utility weighting, then, has no effect on relative payoff.

h. Limitations. Combat operations are operations performed by people (friendly vs enemy) provided with "tools" to augment their physiological capacity and capability. Inherent in human factors analyses (and operations) is the difficulty in arriving at valid conclusions based on group or individual behaviorism measurements.

There is an apparent built-in limitation in the use of the utility concept for evaluating effectiveness of STANO systems and mixes. The apparency of the limitation is that reliability assessment or measurement may have quantitative possibilities but the existing state-of-the-art in human factors research provides mostly subjective measurements based on judgment and intuition with some induced observational data. However, this is not all bad: selective experienced judgment can provide good predictive data relative to reliability of either man or machine or both.

It is because there are two types of uncertainty--uncertainty due to ignorance, and uncertainty due to specification of the problem--that a decision maker considers a whole pattern of successes and failures in the sequence of his decision concerning human factors and the influence on operations. If he knows the pattern exactly, he can predict the next outcome. If he knows the pattern approximately he can predict the next outcome with some degree of accuracy. (See Churchman, ref 5.)

The conclusion, then, is that there are two plausible definitions of probability. One consists of defining the concept in terms of relative frequencies of a subclass of items in a reference class. The second is in terms of opinions or judgements. Essentially, the first definition "grounds" probability in a logic of classes, the second into intuition and psychology.

Experimental work has demonstrated that scaling as a rating results in remarkable agreement in judgment accorded by different raters. The success of the methods that permit a person to express a quantitative appraisal of his opinion has been demonstrated by Stevens that the methods are feasible (ref 6). Furthermore, Dalkey demonstrated with the Delphi method that a meaningful estimate of the accuracy of a group response to a given question can be obtained (ref 7).

VI. THESIS IV

Strictly functional block diagrams rather than physical component analysis are most useful to describe and explore surveillance and reaction systems. The author's approach is to analog the system with functional blocks and use block algebra to sense the relatedness and sensitivity to change between organizational system components which can be more significant than changes in the value of the components. The approach treats the complexities as "black boxes" but it is not an oversimplification. Effects of aggregating and fragmenting materiel, communications, intelligence, and command and control system components are more clearly seen and understood. The technique developed by the author from servomechanism methodology is based on the following:*

(1) There is a sensor that inputs a signal consisting of some type of information.

(2) There is a receptor that in some manner transduces this information.

(3) There is a modulator that controls and acts on this information.

The author substantiates his development by demonstrating the technique in networks of blocks representing organizational components and command-communications-intelligence elements and channels for the following systems:

* See Reference 8 for servomechanism theory of functional blocks. The application in Section VI of the Monograph is unique and wholly the development of the author.

• The WWII and Korea surveillance, target acquisition and reaction systems.

• The SEA surveillance, target acquisition and reaction systems.

• An effective and "feasible" surveillance, target acquisition and reaction system for greater utilization of unattended sensor systems.

a. Servomechanism: The servomechanism concept is based on surveillance, target acquisition, night operations system within which there are sensors, transducers, and modulators.

In block diagram form the STANO portrayal is as shown in Figure 6.

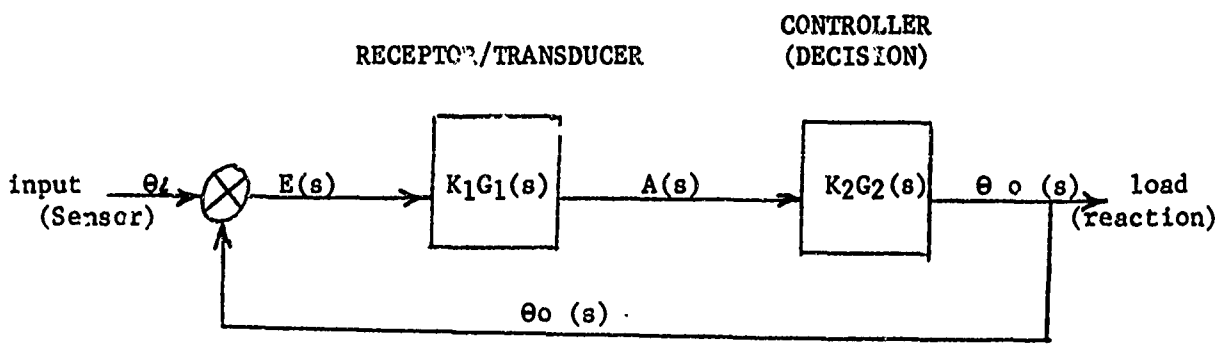

FIGURE 6. Block Diagram of STANO System

In this concept, Kn is a constant factor, Gn is a complex factor, E is error and is equal to θi minus θo, and Kn Gn (s) means that the transfer function is expressed with the complex variable s. $A(s) = E(s)\left[K_1G_1(s)\right]$

In using this approach the following system determinations can be made without the clutter caused by component characteristics:

• Frequency response of a STANO system - sensitivity

• Determinations of stability of STANO systems from their open loop characteristics.

• Presence of nonlinearities.

• Finding closed loop responses.

• Obtaining a feel for STANO system response due to noise inputs.

• Obtaining a feel for STANO system interactions and coupling of components (Man-man, Man-equipment, Equipment-equipment, Organization-equipment).

The blocks can represent an aggregate of the total system components of materiel, organization, and doctrine. Or the blocks can represent the individual components broken out into their elements as sub-systems. Or the blocks can represent the organizational components and command-communications-intelligence transmission elements and channels.

b. Discussion. In general, referring to Figure 6 the following relationships apply:

(1) The overall transfer function KG(s)

$$= K_1K_2G_1G_2\ (s) = \frac{\theta o}{E}\ (s)$$

$$\text{and}\quad K_1G_1\ (s) = \frac{A}{E}\ (s)$$

$$K_2G_2\ (s) = \frac{\theta o}{A}\ (s)$$

(2) the inverse function $= KG^{-1}(s) = \frac{E}{\theta o}\ (s)$

(3) the frequency response function $= \frac{\theta o}{\theta i}\ (s)$

$$= \frac{KG(s)}{1+KG(s)}$$

The general function of a servomechanism is to transfer a signal from a command station to an output station, usually with considerable increase in power level, and the correspondence of output and input signals is a function of the characteristics of the components of the system.

The transfer function of any block may be defined as the complex ratio of the output of a block to its input. In shorthand notation, the transfer function is made up of two factors, a constant term and a complex, or frequency-dependent, term. The convenience is to use K, with suitable subscripts, for the constant factor, and G with suitable subscripts, for the complex factor. Then in general:

Any transfer function = KG

KG(s) means that the transfer function is to be expressed in the complex variable, s. When the input can be considered sinusoidal (KG (jw) can be used which means the transfer function is expressed in terms of the frequency variable, jw.

c. Aggregation. Aggregation is a useful technique. The following describes how this can be accomplished using functional blocks.

Given the following system shown in the schematic diagram 1. The parenthetic(s) is omitted for simplicity.

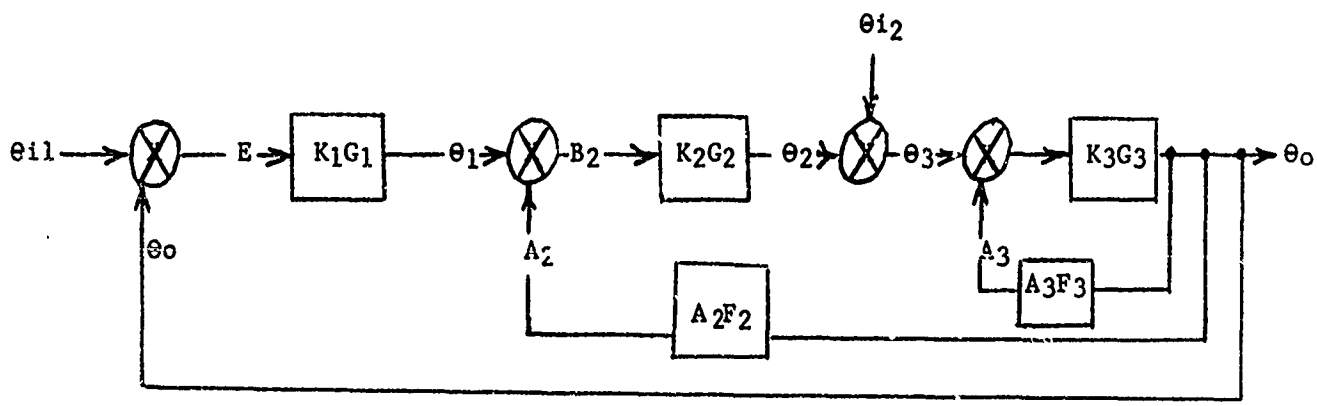

1st Aggregation

Replace the combination K_3G_3 and A_3F_3 with a single block. This considers feedback ≠ unity, wherein the transfer function becomes $\frac{KG}{1+AFKG}$,

thus $\frac{\theta o}{O_3} = \frac{K_3G_3}{1+A_3F_3K_3G_3} = K_4G_4$

The block diagram then becomes the following:

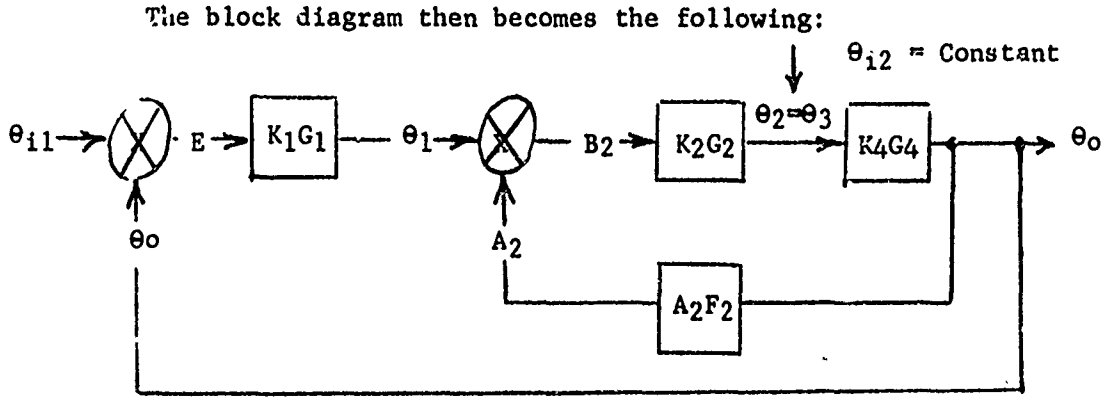

2nd Aggregation

The above schematic diagram may be treated in the same fashion and a single block used to replace K_2G_2, K_4G_4, and A_2F_2,

$$\frac{\theta o}{\theta 1} = \frac{K_2G_2K_4G_4}{1 + A_2F_2K_2G_2K_4G_4} = K_5G_5$$

Which reduces the diagram to the following:

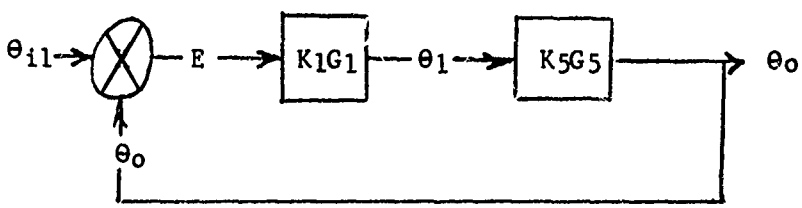

It then follows that the transfer function is

$$KG = \frac{\theta o}{E} = K_1G_1K_5G_5$$

and the frequency - response function is

$$\frac{\theta_o}{\theta_i} = \frac{K_1G_1K_5G_5}{1 + K_1G_1K_5G_5}$$

Expanding these last two equations gives:

Transfer Function: $\frac{\theta_o}{E} = \frac{K_1G_1K_2G_2K_3G_3}{1 + K_3G_3(A_3F_3 + K_2G_2A_2F_2)}$

Frequency Response Function: $\frac{\theta_o}{\theta_i} = \frac{K_1G_1K_2G_2K_3G_3}{1 + K_3G_3(A_3F_3 + K_2G_2A_2F_2) + K_1G_1K_2G_2K_3G_3}$

This shows that the effects of all components are expressed in the solution.

d. Examples Portrayed by Block Diagrams. The following examples demonstrate the technique in networks of blocks representing organizational components and command-communications-intelligence elements and channels for Army surveillance, target acquisition, and night operations systems that were/are employed for WW II and Korea, SEA, and a feasible system for unattended ground sensors.*

Assumptions governing the rationale of the schematics are as follows:

Sensor input drives the system

Sensor input is the independent variable

Intelligence is constant or the dependent variable; (i.e., is effected by a ± change or no change caused in the sensor-transducer-responder chain.

(1) A Concept of WW II and Korea STANO System

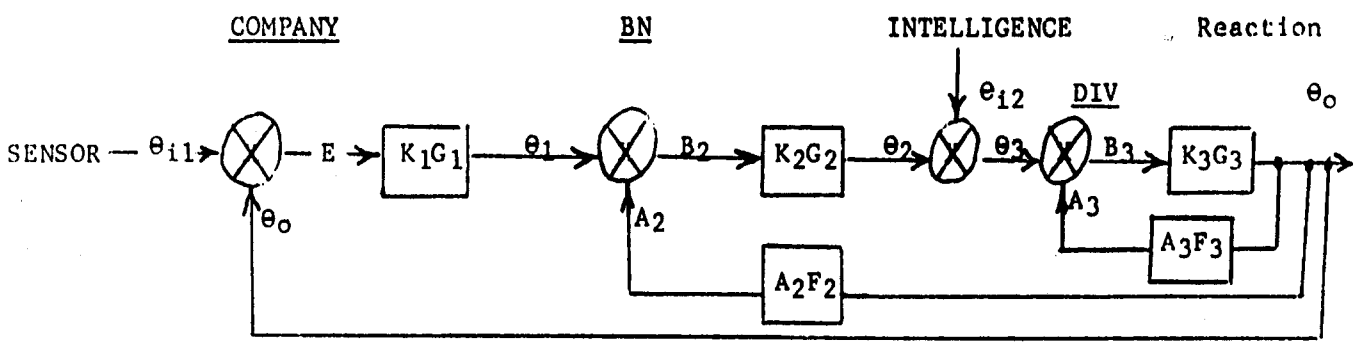

FIGURE 7. Block Diagram of WW II and Korea STANO System

With this system θ_{i1} is driving; reaction is through Division. "Sensor" is in its broadest context--essentially the "eyeball."

Overall transfer function is $\frac{\theta_o}{E} = \frac{K_1G_1K_2G_2K_3G_3}{1 + K_3G_3(A_3F_3+K_2G_2A_2F_2)}$

* For derivation of the examples shown see Reference 8, especially pp 127-134.

Overall frequency response function is

$$\frac{\theta_o}{\theta_{i1}} = \frac{K_1G_1K_2G_2K_3G_3}{1 + K_3G_3(A_3F_3+K_2G_2(A_2F_2+K_1G_1)}$$

(2) A Concept of SEA STANO System

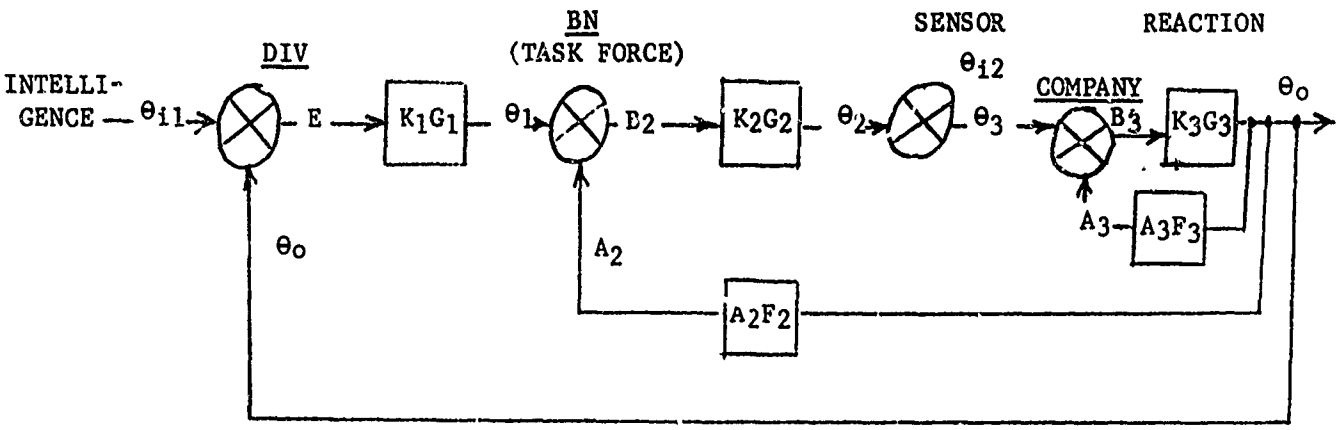

FIGURE 8. Block Diagram of SEA STANO System

θ_{i2} is driving the system. Reaction is through Company.

Overall transfer function is

$$\frac{\theta_o}{E} = \frac{K_3G_3}{1 + K_3G_3(A_3F_3 + K_1G_1K_2G_2 - K_2G_2A_2F_2 - 1)}$$

Overall frequency response function is

$$\frac{\theta_o}{\theta_{i2}} = \frac{K_3G_3}{1 + K_3G_3(A_3F_3 - K_2G_2\ (A_2F_2 - K_1G_1)}$$

(3) A Concept of A Feasible STANO System

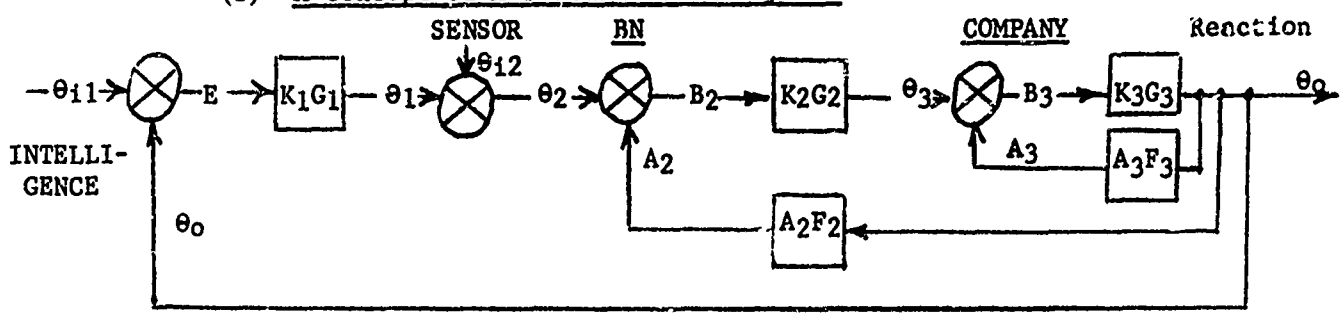

FIGURE 9. Block Diagram of a Feasible STANO System

θ_{i2} is driving the system. Reaction is through BN to company.

Overall transfer function is

$$\frac{\theta_o}{E} = \frac{K_2G_2K_3G_3}{1 + K_3G_3\ (A_3F_3 + K_2G_2(A_2F_2A_3F_3 + K_1G_1)) - K_2G_2 + A_2F_2K_2G_2}$$

and Overall frequency response function is

$$\frac{\theta_o}{\theta_{i2}} = \frac{K_2G_2K_3G_3}{1 + K_3G_3\ (A_3F_3 + K_2G_2(A_2F_2A_3F_3 + K_1G_1)) + A_2F_2K_2G_2}$$

e. Conclusions. The following is a cursory listing that includes some of the most crucial advantages to using the functional block technique of this Monograph:

(1) Provides an effective way to explore for the organizational levels "best suited" to accept STANO messages for "best reaction."

(2) Provides an effective way to study breakout and interactions between organizational components within the message flow process.

(3) Provides an effective way to analyze the effects of centralizing or decentralizing equipment and/or organizational within the intelligence-command-and-control system.

VII CONCLUSIONS

Within the Monograph the author attacks crucial problems encountered when analysis, assessment, and modeling are attempted of both the intelligence-command-and-control systems and the processes within the land combat systems. Proposed solutions to these problems can be developed by using the following four techniques used by the author:

(1) Figure 4, page 9 illustrates the first technique wherein optimal organizational levels for decision can be tested for responsiveness to time constraints at an organizational node or transfer point within the communication and command transmission system. Measures are based on such criteria as decentralization index (Criteria 4), and average total time delay or maximum number of levels (Criteria 3).

(2) The second concept (technique) critically distinguishes a command transmission system within the general communication system by postulating that the reliability of a message is a decision criteria in itself. Furthermore the command transmission system transmits a single message from a source that is not stochastic, i.e. is not transmitting a large number of symbols on a probabilistic basis. The destination of command transmission message is also not merely a recipient of symbols; it is an active agent whose actions depend on received messages. The message flow is a sequence of independent (single or combined) messages of information transliterated into commands.

(3) The third technique is established on the concept that surveillance and/or target detection are decision tasks wherein the decision maker at the decision nodes in the organizational network looks backward to the sensors and forward to the reaction forces or firepower. The technique's basis is "decision making under risk" using reliability of the system (materiel plus people) for the probability measure of occurrence (false alarms being unreliability), and loss or gain in objectives being the utility factor. The model for the technique is the expected value whereby effectiveness is measured in terms of payoff relationships whether in dollars cost, casualties in men and materiel, advantages lost or gained, overkill or underkill, or effects on future possible actions, depending upon preferred criteria.

(4) The fourth technique provides a useful way to explore and "measure" the effects of manipulations of the functional levels for intelligence-command-and-control operations. It makes use of the functional block diagram and the mathematical operation called "block algebra." The specific examples studied were STANO systems whereby such questions were addressed as the following: Shall STANO information be inputted to company and message flow be through battalion to division and reaction at division (Figure 7, page 31)?; to company

with reaction at company (Figure 8, page 32)?; or, for instance, to battalion with message flow to company and reaction by company (Figure 9, page 33)? Thus, the technique provides an effective way to explore conceptually for organizational levels "best suited" to accept STANO messages for "best reaction." It also provides an effective way to breakout and study interactions between organizational components within the message flow process, and to analyze the effects of centralizing or decentralizing equipment and/or functions within the intelligence-command-and-control systems of the Army land combat systems.

VIII REFERENCES AND BIBLIOGRAPHY

1. Farmer, James; Decisions, Communication, and Organization, The Rand Corporation, Santa Monica, California, Dec 61. AD 636175.

2. Farkas, Leonard; Transmission of Command Information, Institute for Defense Analysis, Research Paper P-160, Oct 65.

3. Sweat, Calvin N.; "A Duel Involving False Targets," Operations Research Journal, Vol. 17, No. 3, May - Jun 69.

4. Evans, Gary W.; "Risk-Taking Set and Target Detection Performance," J. Appl. Psychol., Vol. 49, No. 4, Aug 65.

5. Churchman, C. West; Prediction and Optimal Decision, Prentice Hall, Englewood Cliffs, New Jersey, 1961.

6. Stevens, S. C.; "On the Operation Known as Judgement," American Scientist, Vol. 54, No. 4, 1966.

7. Dalkey, Norman C.; The Delphi Method: An Experimental Study of Group Opinion, Rand Corporation, Santa Monica, California, Jun 69.

8. Thaler, George J. and Brown, Robert G.; Servomechanism Analysis, McGraw-Hill, New York-Toronto-London, 1953.

9. Whipple, Sherburne, Jr.; "Sensitivity of Ground Combat Models to Weapons Mixes," RAC Corporation, Dec 69. AD 863024.

10. Moore, Michael L.; A Review of Search and Reconnaissance Theory Literature, Michigan University, Ann Arbor Systems Research Laboratory, Jan 70. AD 700333.

11. Thomas, Francis H.; "A View of Man's Role and Function in a Complex System," paper for annual meeting of Alabama Psychological Association Birmingham, Alabama, Professional Paper 25 - 68, June 1968.

12. US Army Management School, OR/SA Executive Course Publication, CEA-153-N. 1, Measure of Military Effectiveness, undated.

13. Hayward, Philip; "The Measurement of Combat Effectiveness," Operations Research Journal, Vol. 16, No. 2, Mar - Apr 68.