AMMRC PTR 71-4

AD

AD737586

THE MAGNETIC RECORDING BORESCOPE - INSTRUMENTATION FOR THE INSPECTION OF CANNON TUBES

HAROLD P. HATCH and NICOLA ROSATO
MATERIALS TESTING DIVISION

November 1971

DDC
RECEIVED
MAR 2 1972
B

Approved for public release; distribution unlimited.

Reproduced by
NATIONAL TECHNICAL
INFORMATION SERVICE
Springfield, Va 22151

ARMY MATERIALS AND MECHANICS RESEARCH CENTER
Watertown, Massachusetts 02172

36

CFSTI WHITE SECTION
DDC BUFF SECTION
UNANNOUNCED
JUSTIFICATION
BY
DISTRIBUTION/AVAILABILITY CODES
DIST. AVAIL. and/or SPECIAL

The findings in this report are not to be construed as an official Department of the Army position, unless so designated by other authorized documents.

Mention of any trade names or manufacturers in this report shall not be construed as advertising nor as an official indorsement or approval of such products or companies by the United States Government.

DISPOSITION INSTRUCTIONS

Destroy this report when it is no longer needed.
Do not return it to the originator.

UNCLASSIFIED
Security Classification

DOCUMENT CONTROL DATA - R & D

(Security classification of title, body of abstract and indexing annotation must be entered when the overall report is classified)

1. ORIGINATING ACTIVITY *(Corporate author)* Army Materials and Mechanics Research Center Watertown, Massachusetts 02172	2a. REPORT SECURITY CLASSIFICATION Unclassified 2b. GROUP

3. REPORT TITLE

THE MAGNETIC RECORDING BORESCOPE — INSTRUMENTATION FOR THE INSPECTION OF CANNON TUBES

4. DESCRIPTIVE NOTES *(Type of report and inclusive dates)*

5. AUTHOR(S) *(First name, middle initial, last name)*

Harold P. Hatch and Nicola Rosato

6. REPORT DATE November 1971	7a. TOTAL NO. OF PAGES 33	7b. NO. OF REFS 9
8a. CONTRACT OR GRANT NO. b. PROJECT NO. PEMA 15042 c. AMCMS Code 4931.05.5042 d.	9a. ORIGINATOR'S REPORT NUMBER(S) AMMRC PTR 71-4 9b. OTHER REPORT NO(S) *(Any other numbers that may be assigned this report)*	

10. DISTRIBUTION STATEMENT

Approved for public release; distribution unlimited.

11. SUPPLEMENTARY NOTES	12. SPONSORING MILITARY ACTIVITY U. S. Army Materiel Command Washington, D. C. 20315

13. ABSTRACT

A two-phase project was implemented with the objective of extending the Magnetic Recording Borescope (MRB) capability to various caliber cannon tubes. Phase I involved the design and fabrication of an integral, self-propelled scanning mechanism adaptable to calibers 152mm through 175mm and Phase II provided a second model for similar adaptation to 90-mm and 105-mm tubes. The principle of operation is based on the electronic sensing of magnetic leakage fields associated with cracks in a previously magnetized gun tube. A Hall-effect device was incorporated as the magnetic field detector. The resulting MRB readout includes a continuous three-dimensional recording of the interrogated bore surface as well as a two-dimensional recording where quantitative defect signal amplitude data may be obtained for correlation with crack depth. (Authors)

DD FORM 1 NOV 65 1473 REPLACES DD FORM 1473, 1 JAN 64, WHICH IS OBSOLETE FOR ARMY USE.

UNCLASSIFIED
Security Classification

UNCLASSIFIED
Security Classification

14 KEY WORDS	LINK A		LINK B		LINK C	
	ROLE	WT	ROLE	WT	ROLE	WT
Nondestructive tests						
Ferromagnetic materials						
Magnetic detection						
Crack propagation						
Hall effect						
Electronic recording						

UNCLASSIFIED
Security Classification

AMMRC PTR 71-4

THE MAGNETIC RECORDING BORESCOPE - INSTRUMENTATION FOR THE INSPECTION OF CANNON TUBES

Product Technical Report by

HAROLD P. HATCH and NICOLA ROSATO

November 1971

D/A Project PEMA 15042
AMCMS Code 4931.05.5042
PEMA - Materials Testing Technology

Approved for public release; distribution unlimited.

MATERIALS TESTING DIVISION
ARMY MATERIALS AND MECHANICS RESEARCH CENTER
Watertown, Massachusetts 02172

ARMY MATERIALS AND MECHANICS RESEARCH CENTER

THE MAGNETIC RECORDING BORESCOPE — INSTRUMENTATION FOR THE INSPECTION OF CANNON TUBES

ABSTRACT

A two-phase project was implemented with the objective of extending the Magnetic Recording Borescope (MRB) capability to various caliber cannon tubes. Phase I involved the design and fabrication of an integral, self-propelled scanning mechanism adaptable to calibers 152mm through 175mm and Phase II provided a second model for similar adaptation to 90-mm and 105-mm tubes. The principle of operation is based on the electronic sensing of magnetic leakage fields associated with cracks in a previously magnetized gun tube. A Hall-effect device was incorporated as the magnetic field detector. The resulting MRB readout includes a continuous three-dimensional recording of the interrogated bore surface as well as a two-dimensional recording where quantitative defect signal amplitude data may be obtained for correlation with crack depth.

CONTENTS

	Page
ABSTRACT	
INTRODUCTION	1
TEST PRINCIPLES	3
MECHANICAL DESIGN	4
Detector Head Scanning Assembly	4
Model VI - 152mm through 175mm	6
Model VIII - 90mm and 105mm	8
DATA ACQUISITION AND DISPLAY	9
Detector	9
Signal Processing	13
Recording Instrumentation	16
RESULTS AND DISCUSSION	18
Inspection Records	18
Inspection Procedures	20
Crack Depth Correlation	21
MRB Limitations	22
CONCLUSIONS	22
RECOMMENDATIONS	23
ACKNOWLEDGMENT	23
LITERATURE CITED	24
APPENDIX	25

INTRODUCTION

Historically, gun tube defects have been a serious problem to the Army, particularly those occurring as fatigue cracks in bore surfaces. Cracks commonly referred to as "heat-checking" are normally initiated in cannon bores as the first few rounds are fired and, as a result of cyclic compressive loading, continue to propagate at a rate which is dependent on numerous factors such as the design of the tube, the type and thermal history of the material used, and the service experience of the gun. If the cyclic loading induced by repeated firing is continued indefinitely, cracks will propagate to a critical depth and the tube will fail. The significance of this problem was exemplified during World War II by a number of cannon failures. Consequently, the first attempt to detect and record bore cracks by nondestructive methods was undertaken by the Watertown Arsenal Laboratories in 1944. The investigation resulted in the development of the Magnetic Recording Borescope (MRB) which was capable of plotting the location and lateral extent of bore surface cracks in smooth or nonrifled gun tubes.[1] The effort continued into the 1950's with the development of MRB models II and III which were designed primarily as in-process inspection aids and culminated with model IV which was a calibrated unit designed expressly for the inspection of the smooth-bore powder chamber of the 155-mm howitzer.[2]

After the close of the Korean conflict, refinement and application of the method remained dormant. It was not until several years later that interest was renewed in applying the MRB scanning technique. In mid-1966, the need to nondestructively examine the bore of cannon tubes for firing-induced fatigue cracks recurred as the result of the brittle fracture of a 175-mm M113. The area of interest was no longer restricted to the smooth-bore chamber, but extended into the rifled portion of the tube. In response, AMMRC undertook an immediate investigation with the objective of reassessing the MRB approach and then proceeded with the development of a new scanning system designed specifically for inspecting the critical area of the 175-mm gun tube which included a portion of the chamber, the forcing cone, and approximately two feet of the rifled bore. This scanning system, designated as MRB model V, was utilized in an extensive firing program initiated by AMC with the objective of establishing criteria which could be used as an adequate basis for extending the usable wear life of the 175-mm M113 gun tube. The test program was conducted at Yuma Proving Ground from January through July 1967 and results showed conclusively that the MRB was capable of monitoring progressive fatigue damage by detecting and recording the location, length, and relative amplitude of leakage fields caused by cracks in magnetized 175-mm gun tubes.[3] A description of the scanning system, inspection procedures, and a summary of results of the test program is given in Reference 3.

As the result of a concentrated study of the metallurgical characteristics of numerous 175-mm gun tubes,[4] a more adequate specification for heat-treated-to-strength forgings was provided. Consequently, forgings were produced having far superior toughness characteristics than earlier gun tubes and Watervliet Arsenal laboratory tests of autofrettaged tubes of the new material indicated a significant increase in fatigue life. To determine whether the service life of the new autofrettaged 175-mm tube would be limited by wear accuracy or fatigue crack propagation, a second test firing program was initiated in April 1968 at Aberdeen Proving Ground

(APG). Again, MRB inspections were conducted at periodic intervals during the firing schedule to insure the early detection of any possible fatigue cracks. Three tubes were fired 3000 rounds and one tube 2400 rounds. The MRB scanning mechanism designed for the previous Yuma test was used, but with updated instrumentation and recording techniques. Throughout the entire firing schedule, no significant fatigue cracks were detected in any of the tubes.[5] Results of the subsequent Watervliet Arsenal laboratory cycle-to-failure tests on the four tubes demonstrated a significant increase in fatigue life beyond the measured wear life and also clearly showed that the fatigue life of the chamber is less than that of the origin of rifling.[6]

In order to verify the performance of the production autofrettaged 175-mm M113E1 gun tube under actual service conditions and to obtain a larger sample, a Special Test for Service Life was planned for implementation in Vietnam. Therefore, in April 1969 an immediate requirement existed for the MRB inspection of gun tubes in the field. The feasibility of using the AMMRC Magnetic Recording Borescope to inspect the 175-mm gun tube for firing damage had already been established. Results of the two previous firing tests had demonstrated the reliability of the method for the detection of service-induced fatigue cracks. To provide a system for field use in a combat area and to meet the new requirements of the Special Test for Service Life, major modifications to the scanning mechanism were required in order to examine the *entire chamber* in addition to the origin of rifling. The instrumentation required complete redesign with respect to portability, environmental protection, and simplicity of operation. Also, the scanning mechanism as well as the instrumentation had to be adapted for operation from portable power supplies available in the field. Two complete units of the new inspection system were designed, fabricated, and shipped to Vietnam within the period from May through July 1969. This Special Test involved firing a total of twelve tubes, representing three different forging suppliers, to a predetermined wear limit. Throughout the program, MRB inspections were conducted at periodic intervals and no significant fatigue cracks were detected in any tube during the entire firing schedule.[7] A complete description of the instrumentation system, field inspection procedures, and a summary of test results is reported in Reference 7.

The foregoing historical summary is intended to familiarize the reader with the actions taken to date in the development of a practical nondestructive inspection system designed specifically for 175-mm gun tubes. Because of the success and effectiveness of using the MRB for monitoring progressive fatigue damage, a two phase project was initiated under the Materials Testing Technology Program with the objective of extending the Magnetic Recording Borescope capability to other caliber gun tubes in addition to 175-mm. Phase I involved the design and fabrication of MRB model VI which is adaptable to various calibers from 152mm through 175mm and Phase II provided the model VIII* for similar adaptation to 90-mm and 105-mm tubes. This report deals with the development of the new MRB instrumentation system which is adaptable to a variety of cannon tubes currently in use by the U. S. Army.

*The model VII designation was assigned to the special 175-mm MRB field version which was designed prior to the initiation of Phase II.

TEST PRINCIPLES

The MRB crack detection system is based on the electronic sensing of magnetic leakage fields associated with cracks in a previously magnetized tube. For a significant leakage field to exist in the vicinity of a crack, the material must contain a magnetic flux which is oriented normal to the crack direction. Since fatigue cracks produced by repeated pressure cycles in the bore of cannon tubes are generally longitudinal in direction, the magnetic flux must be oriented circumferentially. This condition is most readily achieved by exposing the gun tube to a strong magnetic field produced by an axially positioned dc current-carrying conductor. The level of residual magnetization retained upon removal of the applied field is dependent on the B-H characteristics of the steel and the value of magnetizing current.

A recording of the tangential component of the magnetic leakage flux associated with a crack-like defect is illustrated in Figure 1 for both smooth bore and rifled bore configurations. The density of the leakage flux decreases with increasing distance from the bore surface, but at any fixed distance (lift-off), the leakage flux reaches a maximum value directly over the center of the crack. The actual recorded magnitude of the tangential component of the leakage field is dependent on the detector lift-off distance, the residual flux density within the tube, the depth of the crack, and the width or tightness of the crack.

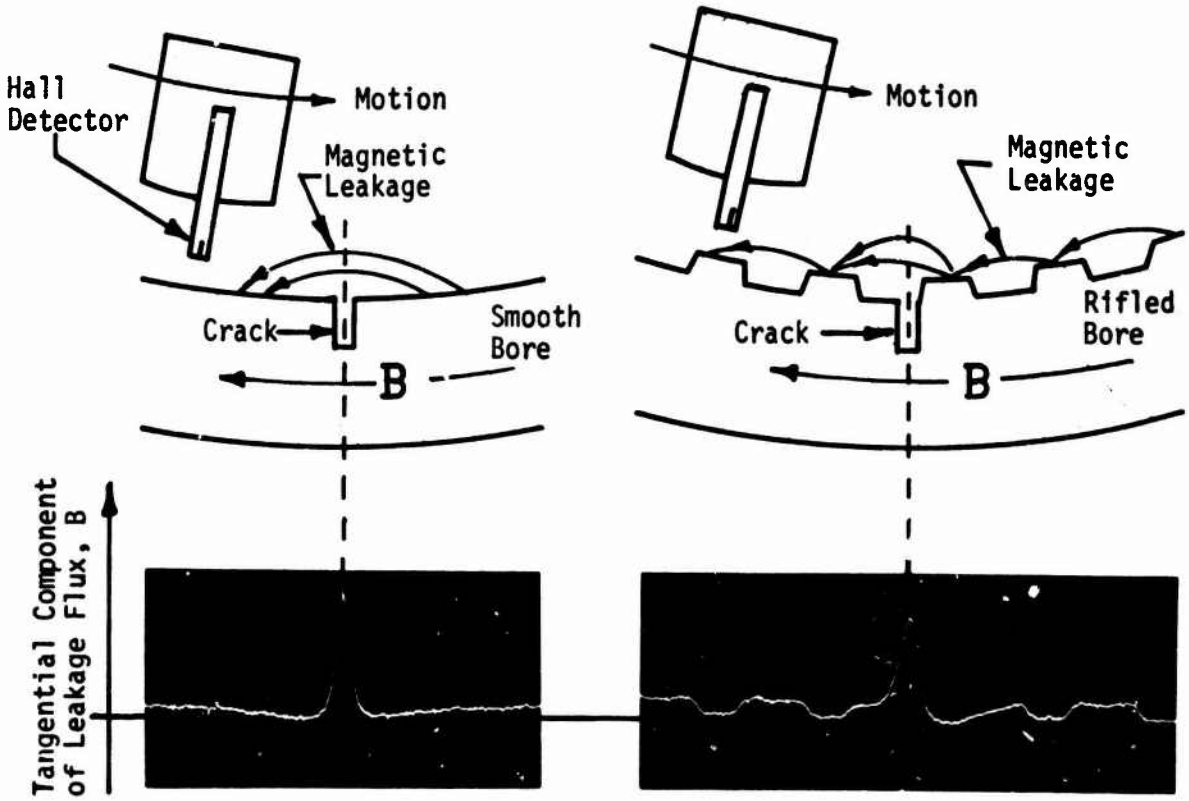

Figure 1. ELECTRONIC DETECTION OF MAGNETIC LEAKAGE ASSOCIATED WITH CRACKS

The fundamental detection principle of the MRB is equivalent to the more familiar magnetic particle method of inspection for surface cracks where ferromagnetic powders are used as the detector. The powder is "collected" by the leakage field emanating from the free magnetic poles associated with a crack. Although an electronic detector is substituted for the conventional ferromagnetic powder in the MRB crack detection system, magnetic leakage flux is detected in both cases. The detector used in the present MRB is a Hall-effect element which generates an output voltage that is directly proportional to the magnetic flux density. By rotating the detector around the inner circumference of a tube at a constant lift-off distance, leakage fields existing in the vicinity of cracks are detected and recorded.

MECHANICAL DESIGN

The MRB instrumentation system can be considered to consist of three major components: a scanning mechanism containing the motor-driven rotating detector head; a control console; and the signal processing and recording instrumentation. The design considerations for the scanning mechanisms for this project were based on the experience gained from the models designed specifically for the previous 175-mm firing tests where the area scanned was limited to a preselected "critical" portion of the tube.[3,5,7] Inasmuch as the "critical" area for early crack initiation and propagation cannot always be predicted in advance for a given tube, the capability of scanning the entire length of a tube, or any portion thereof, was included in the new design. To scan the bore surface of a tube with a detector requires a circumferential sweep concurrent with axial traverse. This motion describes a helical path and, by adjusting the axial traverse rate with respect to the angular velocity of the detector head, complete coverage of the bore surface is achieved. In the present design, the axial traverse distance, during one revolution of the detector head, is one third the width of the active area of the detector element. This relationship insures an overlap of the surface area inspected.

Detector Head Scanning Assembly

One design feature which is common to the recent MRB models V and VII, as well as the present models, is that of the centrifugal detector-head assembly which consists of a rotating housing, connecting arms, and the detector holder. The basic design concepts of the assembly are illustrated in Figure 2. It has proven to be rugged and reliable throughout three extensive gun tube inspection programs. Three degrees of freedom are provided for the detector: radial, tangential, and axial. As the mechanism rotates, the detector head is held in contact with the bore surface by centrifugal force and the radial freedom (circumferential pivot) assures maintenance of contact for various bore diameters. The tangential freedom assures perpendicularity of the detector to the bore surface. The axial freedom assures constant alignment of the detector head with the bore surface during change-of-slope conditions within the chamber neck, forcing cone, and origin of rifling portions of the gun tube.

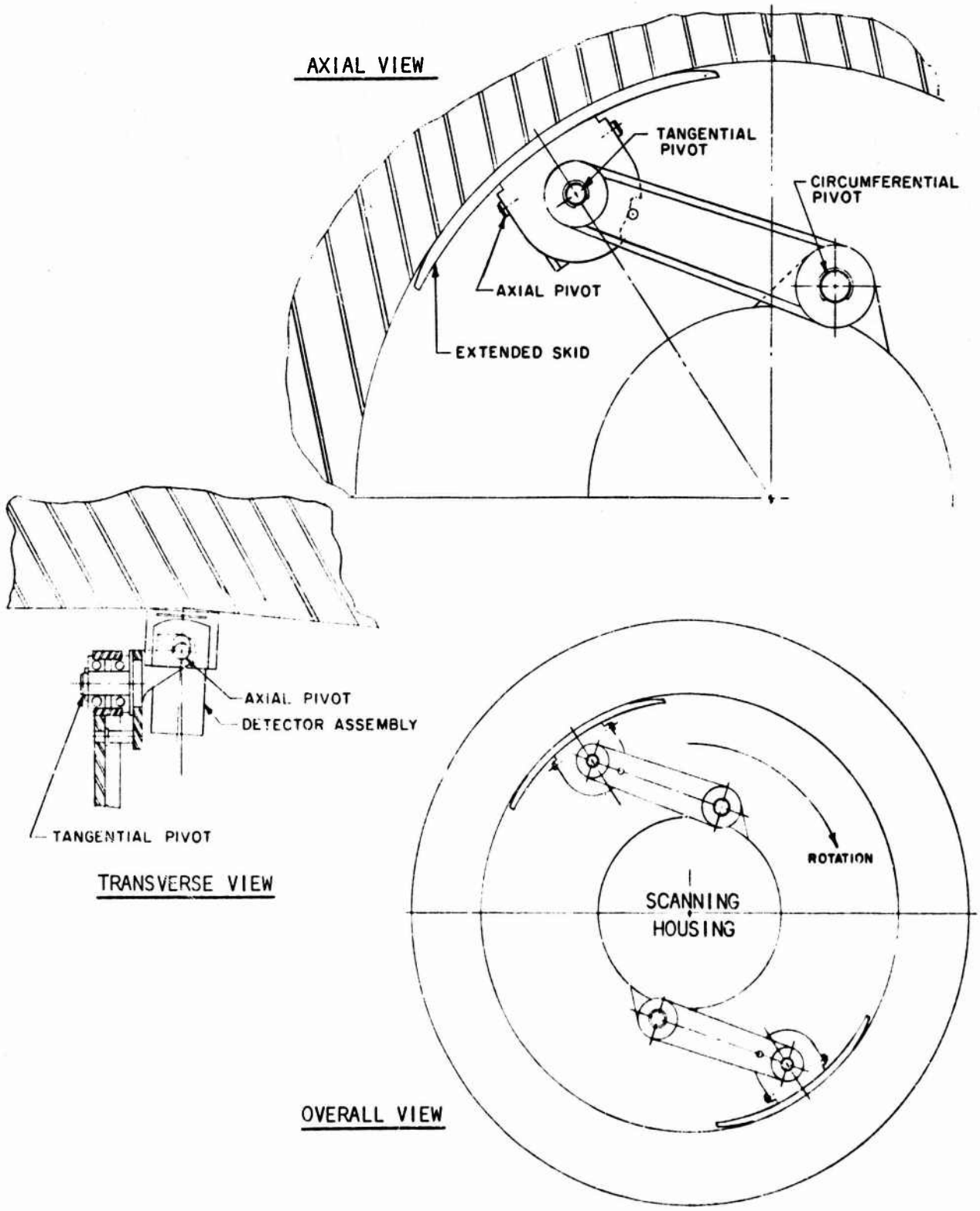

Figure 2. DESIGN CONCEPT OF CENTRIFUGAL DETECTOR-HEAD ASSEMBLY

Figure 3. DETECTOR HOLDER AND SKID ASSEMBLY WITH CONNECTING ARM

A close-up view of the model VI detector holder and skid assembly with connecting arm attached is shown in Figure 3. The main housing of the scanning assembly, which is motor-driven at a constant angular velocity, contains the essential slip-rings and brushes required for interconnecting the rotating detector element with the stationary recording instrumentation. A counter-balance arm, which is physically identical to the arm containing the detector, is provided to produce a balanced "fly-wheel" effect. The extended skids shown in Figure 2 and 3 were found to be a necessary addition to the detector holder assembly to reduce the contact instability sometimes encountered when scanning severely eroded areas of fired gun tubes.

Model VI - 152 MM through 175 MM

Phase I of this project resulted in the construction of an integral self-propelled scanning mechanism designed for adaptation to 152-mm, 155-mm, and 175-mm gun tubes. Figure 4 is a photograph of the completed mechanism designated as MRB model VI. It consists of a main scanning assembly housing mounted at the center of a support tube. The detector holder and arm assembly shown in Figure 3 is attached to the housing through a pivot pin and a hollow-core dc torque motor contained within the housing provides the required rotation. The central support tube serves the dual purpose of (1) providing physical support for both the scanning assembly and the axial traversing mechanism and (2) providing a conduit for signal and power leads. The axial traverse mechanism consists of traction wheels fixed on adjustable legs and driven through a gear train by small synchronous motors contained within the support tube. Identical traverse assemblies are mounted at each end of the tube and the resulting three-point support provided by the legs assures concentric positioning of the entire scanning mechanism within the bore of a gun tube. The traction wheel legs are spring loaded and may be extended radially to accommodate the various bore diameters by means of adjusting cams which act on preloaded Belleville springs. An exploded view of the components which comprise one traverse assembly is shown in Figure 5.

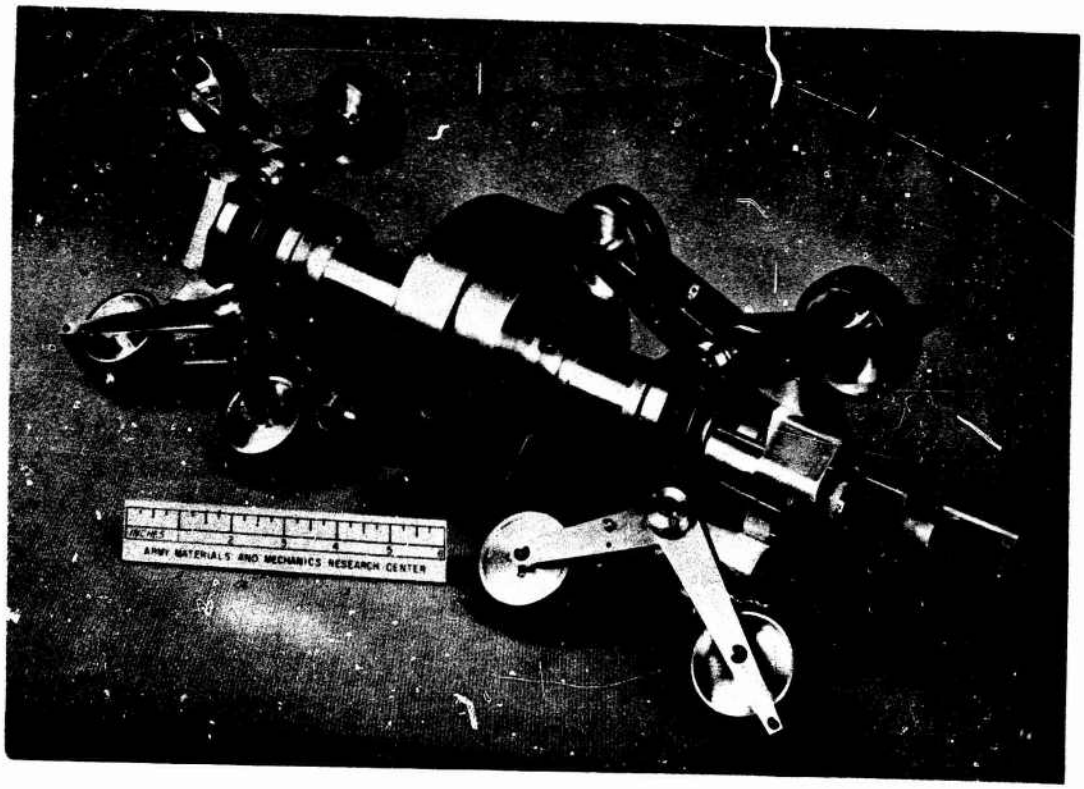

Figure 4. MAGNETIC RECORDING BORESCOPE MODEL VI SCANNING MECHANISM FOR 152-MM THROUGH 175-MM GUN TUBES

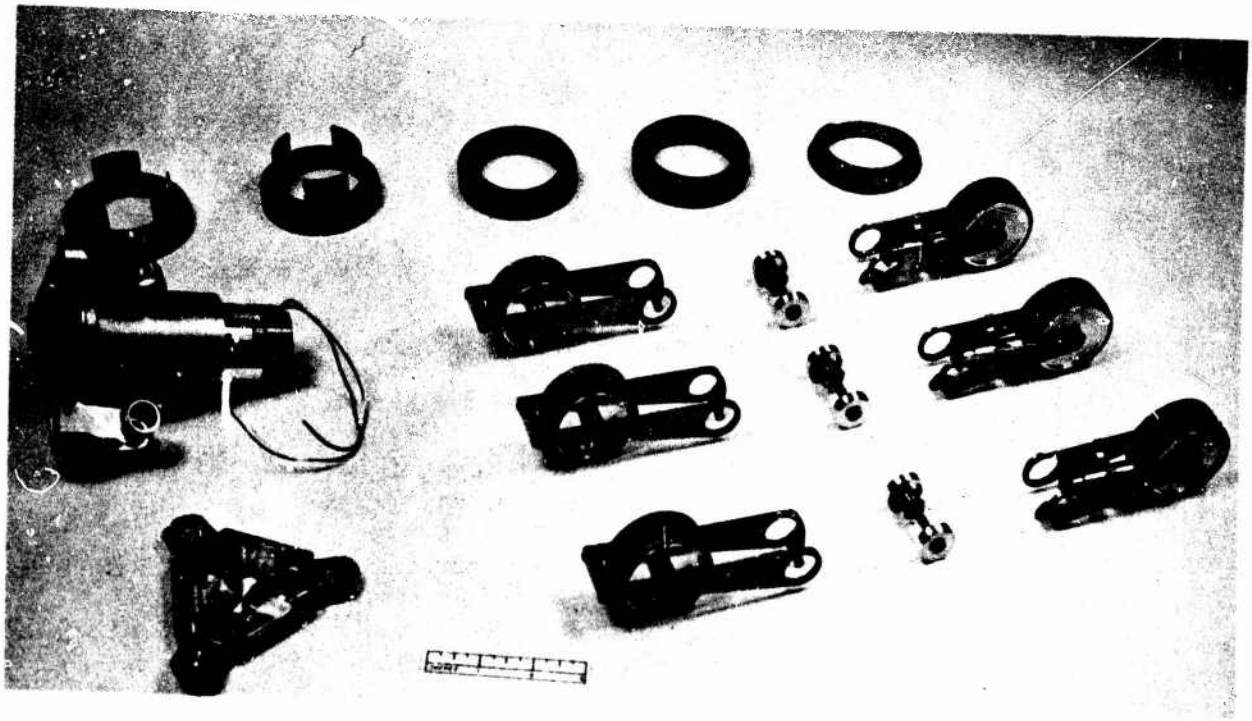

Figure 5. EXPLODED VIEW OF MODEL VI TRAVERSE ASSEMBLY COMPONENTS

An interconnecting cable from a control console provides power for the scanning and axial traverse motors as well as control current and signal leads to the detector head. A complete circuit schematic of the control console and the electrical wiring diagram of the scanning mechanism appear in the Appendix. The synchronous traction motors provide a constant traverse rate of 0.1 inch/second and traverse direction may be reversed by a control switch when retrieval of the scanning mechanism is desired. The dc motor, which is powered by a servo amplifier located in the control console, rotates the detector heat at 300 rpm. The frictional force produced by the detector head skids sliding on the bore surface appears as a varying load to the dc scanning motor which is dependent on bore diameter and configuration (rifling versus smooth chamber). Since the speed of the motor varies with load, a feedback amplifier was designed which senses motor current variations caused by load variations and, in turn, supplies an instantaneous correction voltage to the input of the motor drive circuit. In this way, constant rotational speed is maintained under varying load conditions. A schematic of the feedback amplifier also appears in the Appendix designated as A_8 on the control console wiring diagram.

Model VIII - 90 MM and 105 MM

After the completion of Phase I, it was necessary to defer the start of Phase II because of the urgent requirement to design and construct the 175-mm MRB field system (model VII) for the Special Test for Service Life previously described.[7] One innovation incorporated in the design of the model VII was the facility to disengage the traverse mechanism for fast retrieval of the scanning mechanism. As a result of the added improvement provided by this feature, it was considered advantageous to develop a similar idea for Phase II of this project. Consequently, the design concept adopted for the 90-mm to 105-mm MRB consists of an integral rotating detector assembly which obtains its axial traverse from an external drive motor. Although consideration had been given to the direct miniaturization of the 152-mm to 175-mm self-propelled version, the above design was selected as most practical and versatile for the smaller caliber gun bores. The size limitation of the 90-mm bore diameter presented numerous problems with respect to space available for traction motors and gear trains.

Figure 6 is a photograph of the completed mechanism designated as MRB model VIII. It features a main scanning assembly coupled through a gear train to a synchronous motor which produces a constant rotational speed of 600 rpm. The mechanism is supported centrally within a tube by six spring-loaded legs provided with free-running wheels. The detector holder and connecting arms are similar to the previous design, except the detector head skids are shorter and, of course, have a smaller radius of curvature. The support legs and detector arms are pivoted to accommodate both 90-mm and 105-mm tubes without adjustment.

The axial traversing mechanism is shown in Figure 7 mounted at the breech end of an M68 105-mm gun tube. A multisection rod is connected to a universal joint at the rear end of the scanning assembly and is driven by the externally mounted synchronous motor at a constant rate of 0.2 inch/second. The universal joint is keyed to prevent rotation of the traverse rod. Each rod section is 3 feet in length and, by connecting additional sections, the entire length or any critical portion of a given gun bore may be scanned. The traverse rods are

engraved with a continuous scale graduated to the nearest 1/4 inch and referenced with respect to the rear face of the tube to indicate the longitudinal position of the detector head. Figure 7a shows the traverse motor in the driving position and Figure 7b shows the motor disengaged for easy insertion and removal of the scanning mechanism. Operation of the 90-mm to 105-mm scanning mechanism is controlled by the same console used to power the 152-mm to 175-mm model and, as mentioned earlier, a complete circuit schematic of the console and electrical wiring diagrams of the scanning mechanisms may be found in the Appendix.

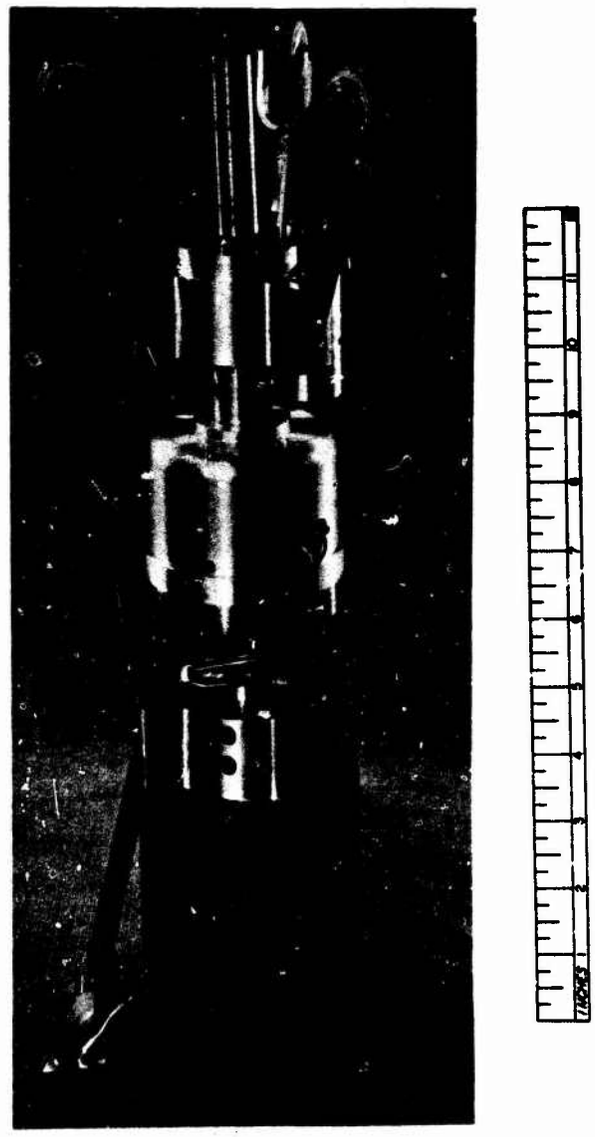

Figure 6. MAGNETIC RECORDING BORESCOPE MODEL VIII SCANNING MECHANISM FOR 90-MM AND 105-MM GUN TUBES

DATA ACQUISITION AND DISPLAY

The previous section described the mechanics for producing a complete physical scan of the bore surface of a gun tube or, in general, of the internal surface of any tube. Equally important, however, is the detector element, the processing of the detected signal for recording, and the suitable display of the collected data. This section, therefore, deals with the electronic aspects involved with the MRB inspection method.

Detector

Probably the single, most important component of the entire system is the magnetic field detector. Two basic types of electronic detectors are available for sensing the existence and location of magnetic leakage fields. The first class of detectors is the inductive type which generates an output voltage proportional to the time rate-of-change of magnetic flux, $d\Phi/dt$. In order for this type of detector to function, relative motion must exist between the detector head and the magnetic leakage field. The earlier MRB models IV, V, and VII utilized this class of detector in the form of a magnetic tape recorder reproduce head. Although the inductive detector element has sufficient sensitivity, its main disadvantage lies in the fact that output voltage amplitude is rate sensitive. For example, when inspecting the 175-mm gun tube, one finds the circumference of the powder chamber 23% larger than the circumference of the rifled bore. Since the angular velocity of the scanning assembly is constant, and therefore independent of longitudinal position, the resulting surface speed of the detector is 23% faster in the chamber than in the

a.

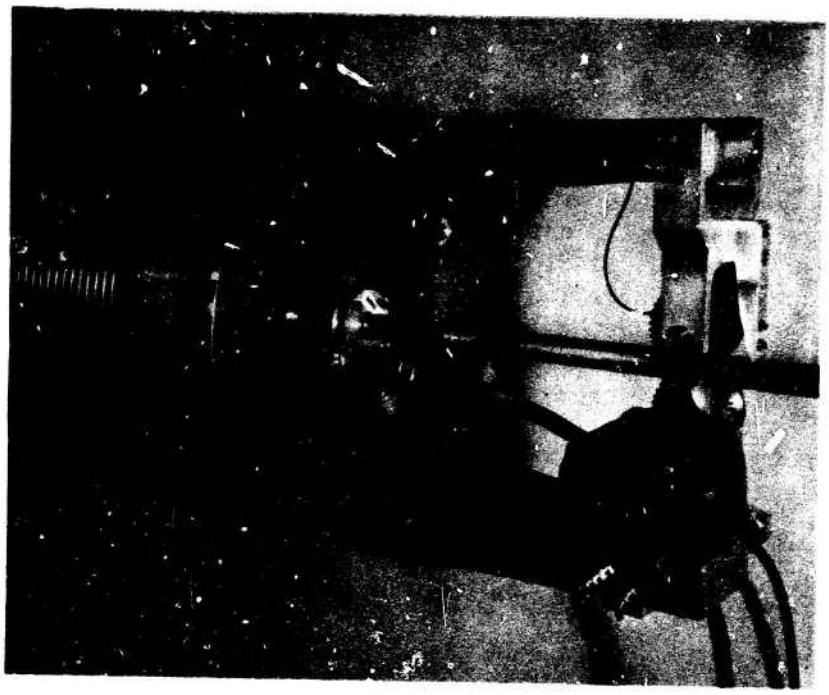

b.

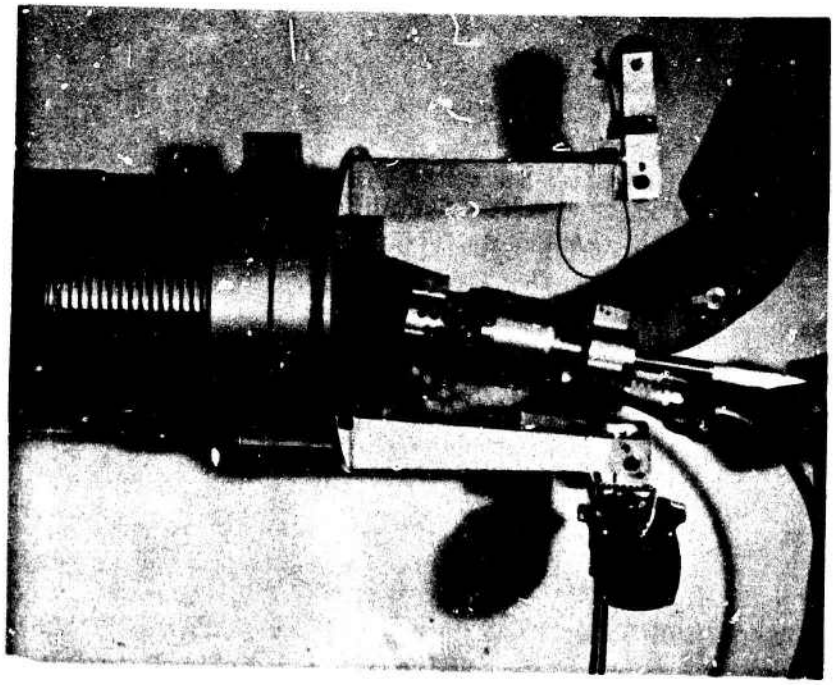

Figure 7. MODEL VIII AXIAL TRAVERSE MECHANISM SHOWN (a) IN THE DRIVING POSITION AND (b) DISENGAGED

rifling. Consequently, signal amplitude corrections are in order depending on the longitudinal position of a detected defect signal. Similarly, bore diameter variations occur in other caliber gun tubes as well. A second, but less significant, effect is introduced when using the inductive tape head for the analysis of magnetic leakage fields. The high permeability ferromagnetic core contained within the detector distorts the actual leakage field produced by fatigue cracks by virtue of its proximity to the bore surface.

The second type of electronic detectors are classified as magnetic flux sensitive detectors and include such devices as Hall-effect generators and magnetoresistors. In contrast, this class of detector is passive to the leakage field being measured and output voltages are *independent* of scanning rate; i.e., output voltage amplitude is proportional to the magnitude of magnetic flux rather than time rate-of-change of magnetic flux. Both static measurement and dynamic scanning measurement of a given leakage field produce identical output voltage amplitudes. Hall detectors had not been utilized in the earlier MRB's because they were considered generally more fagile than tape head detectors and were known to exhibit considerable thermal instabilities. However, with the advent of solid-state technology, significant advances in semiconductor manufacturing techniques have been realized. The development of high-mobility semiconductors has yielded several materials suitable for practical applications of the Hall effect. As a result, Hall detectors are now available which possess adequate Hall coefficients accompanied by high stability, reproducibility, and reliability.

Because of the potential advantages offered by magnetic flux-sensitive devices, a separate task was initiated as part of the overall MRB instrumentation program to investigate the applicability of utilizing such a device as the MRB detector element. The response characteristics of a variety of magnetic flux-sensitivie detectors were compared with those of the conventional MRB inductive element. Both bismuth and indium antimonide magnetoresistors were found to be nonlinear and insensitive at the low level magnetic fields generally experienced in Magnetic Recording Borescope inspections. However, the indium arsenide Hall-effect semiconductor selected for this study was found to be most suitable. Input and output impedances are extremely low (1 and 2 ohms), which is an important noise consideration for devices used at very low signal levels, and the temperature coefficient of output voltage is less than 0.1% per degree centigrade. Most important, sufficient sensitivity is available for the detection of the low level leakage fields produced by shallow fatigue cracks.

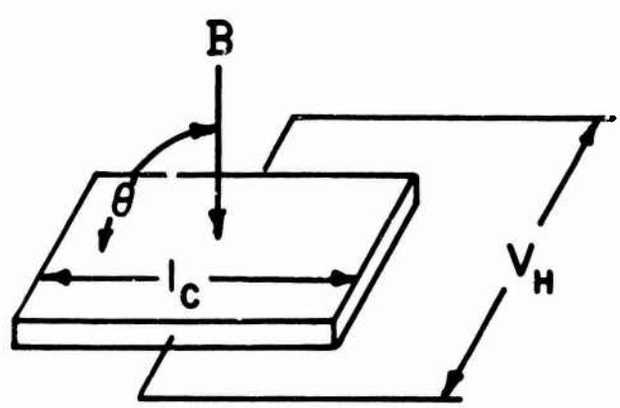

Figure 8. THE HALL EFFECT. Relative direction of current I_C, magnetic field B, and Hall voltage V_H.

A schematic representation of the Hall effect is illustrated in Figure 8. When a magnetic field is applied at right angles to the direction of current

flow in an electrical conductor, a voltage is generated across opposite edges of the conductor. The Lorentz force is the basis of this effect which depends upon the deflection of charged particles moving in a magnetic field. This force is in a direction mutually perpendicular to the path of the moving particles and the magnetic field direction. A useful equation relating the parameters shown in Figure 8 for a practical Hall device is:

$$V_H = K I_c B \sin \theta$$

where V_H is the Hall output voltage, I_c is the control current, B is magnetic field strength, and K is the open circuit sensitivity constant which takes into account the Hall coefficient and geometry effects. The angle θ between the magnetic flux direction and the plane of the Hall element indicates the direction sensitivity of the Hall effect. A derivation of the basic Hall-effect equation from which the above equation follows is given by Putley.[8]

From the foregoing relationship, it is immediately apparent that the Hall effect is applicable to the measurement of magnetic leakage fields. By setting θ equal to 90 degrees and holding I_c constant, the Hall output voltage is directly proportional to magnetic field strength. For application to the MRB detector, a commercially available Hall element was selected having an open circuit sensitivity constant of 0.11 volt/amp kg, a rated control current of 150 ma, and a mean temperature coefficient of V_H equal to -0.08%/°C. A photograph of the Hall element and element holder is shown in Figure 9. The holder is designed for mounting in the detector head skid assembly shown in Figure 3. Although the physical size of the detector is 1/2" x 1/8", the active area of the element is only 0.030" x 0.060".

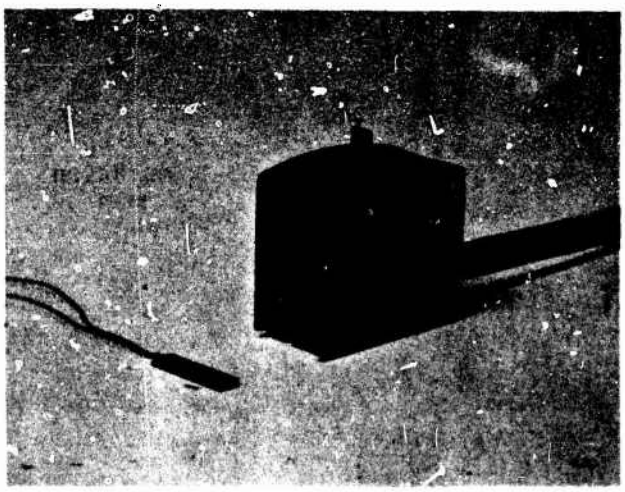

Figure 9. HALL DETECTOR ELEMENT AND DETECTOR HOLDER

A significant step in the practical application of the Hall detector to the MRB scanning system was the design of a solid-state constant current generator for driving the Hall input control current. As the Hall input resistance varies with ambient temperature variations, the required constant current is maintained through the mechanism of a feedback loop. Similarly, any dynamic variations in contact resistance between slip rings and brushes, which form part of the input control current circuit, are also automatically compensated for by the feedback loop of the generator. As a result of this development, the Hall element was incorporated as the MRB detector for this project. A circuit diagram of the constant current generator is designated as A_1 in the overall signal processing amplifier schematic which is described in the following section.

Figure 10 illustrates the comparative output signals generated as the result of scanning the bore of a 175-mm gun tube section with an inductive tape head detector (Figure 10a) and with the high resolution tangential Hall detector (Figure 10b). The tube section contains artificial cracks in the form of narrow (0.010-inch wide) milled slots. The depth of the slots are 0.113 inch and 0.055 inch and correspond respectively with the left and right signals appearing in each of the oscilloscope traces. For Figure 10b the Hall output voltage was amplified 500X prior to recording. Taking into account the open circuit sensitivity constant K and the 500X amplification factor the vertical deflection sensitivity of 0.1 volt/division can be expressed as 12 gauss/division. Although filtering techniques were required to reduce inherent amplifier noise, the resulting Hall voltage amplitude is of the same order of magnitude as that of the conventional MRB inductive detector. These results were most promising inasmuch as a voltage gain of 500X is easily provided by one operational amplifier.

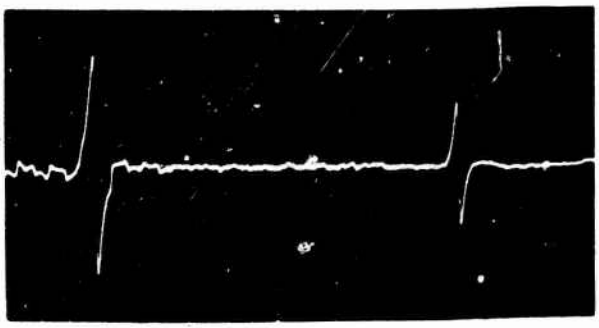

a. Inductive Tape Head

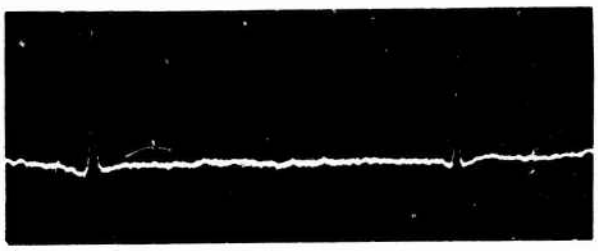

b. Tangential Hall Detector (Gain 500X)

Figure 10. COMPARISON OF DETECTOR OUTPUT VOLTAGES. Horizontal sweep: 10 msec/div. Vert. sens.: 0.1 volt/div. Scanning speed: 300 rpm. Detector lift-off: 0.010 inch

Signal Processing

A schematic diagram of the solid-state operational amplifiers used for processing a detected signal for recording purposes is shown in Figure 11. The signal processing circuit is divided into discrete function blocks indicated as A_1 through A_8 on the schematic diagram. The constant current generator A_1, described in the previous section, includes a power booster in series with the feedback loop which will deliver a current of up to 200 ma. The input impedance of the power booster is high, thus requiring very little current from the operational amplifier itself. The Hall control current is adjustable from 0 to 200 ma and is monitored on a front panel milliammeter. However, at any given setting, control current remains constant within ±0.1% (power supply regulation) since the input of the Hall element is also in series with the feedback loop.

The output of the Hall element is directly coupled to the differential Hall voltage amplifier A_2 which has a fixed gain of 500X. The gain of A_2 may be changed by selecting a different value of R_1 (See Note 1 in Figure 11). Generally, additional amplification is required to increase the amplitude of detected signals to a suitable level for recording. Therefore, amplifier A_3 was included which provides a continuously variable voltage gain from 1X to 1000X.

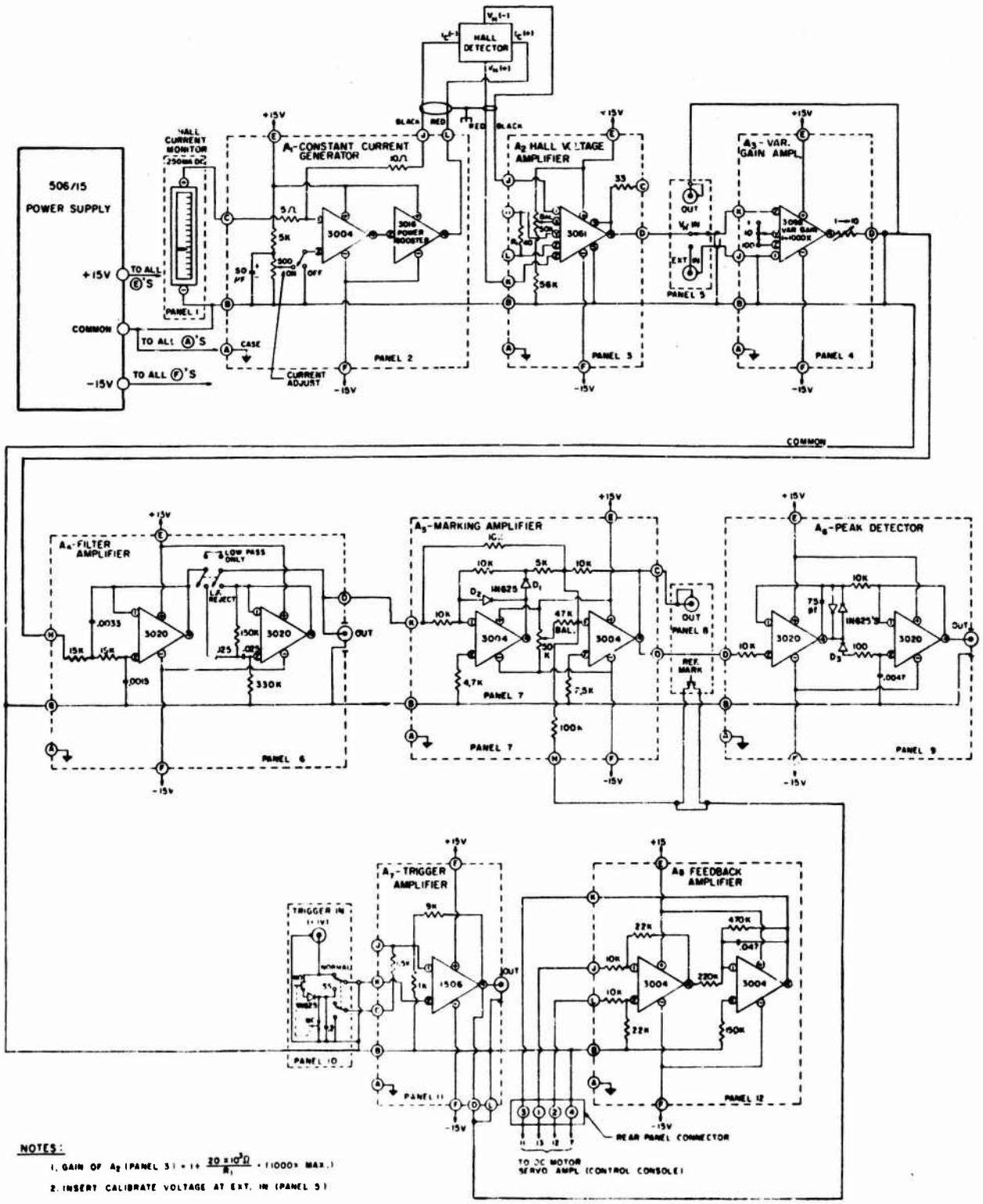

Figure 11. SCHEMATIC OF SIGNAL PROCESSING AMPLIFIERS

The filter amplifier A_4 consists of two active filters, one low pass and one high pass, each having a 2-pole Butterworth response. The low pass section reduces the inherent amplifier noise introduced by the 500X Hall voltage amplifier. It has a high frequency cutoff at 7kHz, which is an order of magnitude higher than the fundamental frequency component of a typical defect signal, and has an attenuation slope of 12 db/octave. The effectiveness of the low pass filter is illustrated by the oscilloscope records of a low level leakage field signal shown in Figure 12. The upper trace is the unfiltered signal appearing at the output of A_3 and the lower trace is the low pass output of A_4. In both cases, the gain of A_3 was set at 1X. The high pass section of A_4, which may be added in series to the low pass section by a front panel selector switch, has a low frequency cutoff at 25Hz and a similar attenuation slope of 12 db/octave. It attenuates the low frequency stress-pattern signals noted during the inspection of some gun tubes and also performs the function of dc blocking for the two following recording amplifiers. The outputs of both A_3 and A_4 are available as front panel connectors for oscilloscope signal amplitude monitoring and recording and for magnetic tape recording of entire inspection records.

a.

b.

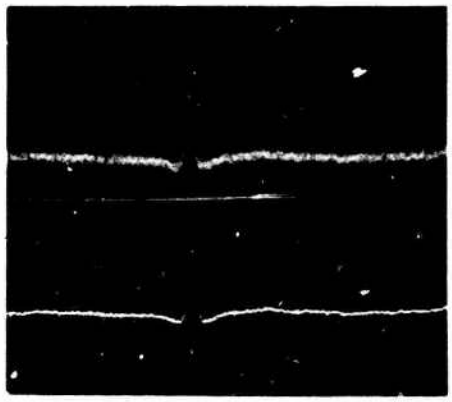

Figure 12. LEAKAGE FIELD SIGNAL
(a) UNFILTERED AND (b) FILTERED
Vertical: 0.1volt/division
Horizontal: 5msec/division

The marking amplifier A_5 is a full-wave rectifier designed to drive the intensity modulation axis (Z-axis) of the facsimile recorder with a unidirectional signal. Since the output polarity of the Hall detector is dependent on the direction of the magnetic field being measured, detected leakage field signals may be of either polarity depending on (1) the polarity of the magnetizing current, or (2) the relative direction of the detector element. The first condition may occur inadvertently in practice whereas the latter would occur when inspecting only the muzzle portion of a gun tube. In this case, the scanning mechanism would be inserted from the muzzle end of the tube rather than the breech end and thereby reverse the direction of the Hall detector by 180° with respect to the magnetic field direction. This circuit, therefore, provides the negative going output signal required for facsimile recording for either a positive or negative going input signal. The circuit design uses the high gain of the operational amplifier to greatly reduce the turn-on effects associated with a diode in simple rectification. Both the forward resistance and forward voltage drop of diode D_1 are divided by the open loop gain of the first amplifier when the input signal is negative (output positive). When the input goes positive, D_1 turns off sharply and D_2 conducts to limit the output of the first amplifier whereby the input signal is applied directly to the second inverting amplifier.

The peak detector A_6 provides an output for two-dimensional strip chart recordings. This circuit holds the peak value of the amplified detector signal for a time period sufficient for the strip chart recorder pen to respond. Diode D_3 provides the peak detecting function by passing the unidirectional pulse which

charges the 0.0047μf holding capacitor while the overall feedback network eliminates the forward voltage drop and nonlinearity of the diode. The 75 pf capacitor compensates the loop response for overshoot. Since the signal is inserted at the noninverting input, polarity sense is maintained and the output appears as a negative step of relatively long duration which is fed directly to the strip chart recorder. The model VI and VIII detector heads make one revolution in 0.2 second and 0.1 second respectively and each traverses an axial distance of 0.020 inch during each revolution. Therefore, the value of the holding capacitor was selected for an approximate time-constant of 0.5 second to assure the recording of short cracks of significant depth. An auxiliary input is provided to the variable gain amplifier A_3 for the dual purpose of (1) introducing a known reference voltage for the calibration of recording instruments and (2) producing facsimile and strip chart records from previously collected magnetic tape records.

The trigger amplifier A_7 provides a timing pulse, derived from the rotating scanning assembly, for synchronizing the horizontal sweep of external recording instruments. The function of the feedback amplifier A_8 was described earlier and is used in conjunction with the model VI dc motor servo amplifier as a constant speed control.

Recording Instrumentation

A photograph of the instrumentation considered essential for the recording and display of test data is shown in Figure 13. The recording instruments include the strip chart recorder (right), the magnetic tape recorder (upper center), and the recording oscilloscope for facsimile records (left). The control console cabinet, seen at the center of the photograph, houses the control panel, a monitoring oscilloscope, and the signal processing amplifier panel already described.

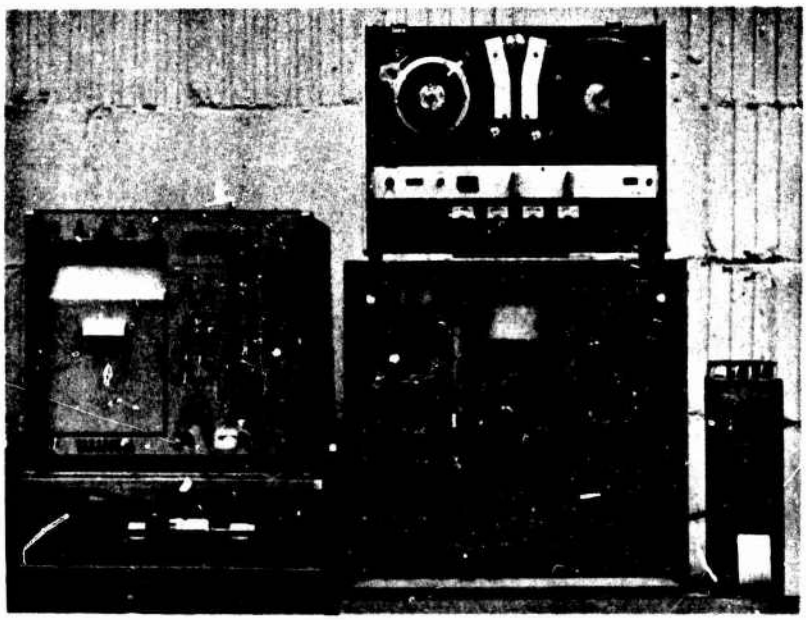

Figure 13. MRB CONTROL CONSOLE AND RECORDING INSTRUMENTATION

The *control panel* contains the necessary power supplies and control switches for operating the scan and transverse motors of both model VI and model VIII scanning mechanisms. It also supplies the voltage to generate the synchronizing timing pulse derived from an interruption of a slip ring contact in the model VI rotating head assembly and from a stationary electromagnetic pick up device in close proximity to the model VIII rotating head assembly. In both cases, the trigger pulse is a 2-volt step of approximately 3-millisecond duration which is generated when the detector head passes the 3:00 o'clock position in its circumferential sweep.

The monitoring oscilloscope is used for initial instrumentation adjustment and calibration and for observing the real-time detector signal during the scanning mode. The sweep speed is adjusted to coincide with the rotational speed of the detector head and each sweep is triggered by the 3:00 o'clock timing pulse. Therefore, the horizontal length of the sweep is equivalent to the circumference of the gun tube bore and the amplitude of a detected signal is displayed on the vertical axis.

The *strip chart recorder* provides a simplified, two-dimensional display of data in the form of a permanent recording of peak signal amplitude versus longitudinal position of the scanning mechanism. If more than one defect exists at a given longitudinal position, only the largest signal amplitude will be indicated. The recording does not indicate angular, or o'clock, position of the signal being detected. During test firing programs, a knowledge of both amplitude and length of a significant defect is considered to be of utmost importance, while a knowledge of its angular position is only of secondary interest. However, angular position can easily be estimated by observing the location of the signal on the oscilloscope sweep. In addition to the signal channel, the recorder contains a manually operated marker channel which is used for indicating longitudinal position of the scanning mechanism at periodic intervals.

An analog *magnetic tape recorder* is included to collect all MRB inspection data and provides a permanent record playback capability for either facsimile or strip chart recordings. Three channels are required for recording (1) the amplified detector signal, (2) the trigger pulse, and (3) record announcements. Before the start of each inspection, a calibration source is used to set the recording level on the signal channel.

The *recording oscilloscope* features a fiber-optic cathode ray tube. It is a single-channel, three-axes recorder which provides the capability of recording continuous or single-sweep signals on six-inch wide, direct-write oscillograph paper. By use of the intensity modulation axis, facsimile records or three-dimensional maps can be obtained of the bore surface of a gun tube where the recorded intensity is proportional to the detected scanning head voltage. By use of the vertical axis, signal amplitudes versus angular position can be recorded for each circumferential scan of the bore for the entire length of tube traversed. Sweep speeds and paper speeds are continuously adjustable and synchronization is obtained from the 3:00 o'clock trigger pulse. The recording paper is marked with reference lines which indicate each inch of axial traverse and each 30 degrees of angular rotation.

To summarize, the above-described instrumentation provides three different data display options: (1) a two-dimensional oscilloscope recording of signal amplitude versus angular position at a given longitudinal position within the bore; (2) a two-dimensional strip chart recording of peak signal detected versus longitudinal position; and (3) a three-dimensional facsimile recording which displays a map of the interrogated bore surface where longitudinal and angular positions are indicated quantitatively, while crack depth is indicated qualitatively. In the latter, intensity of the trace is proportional to signal amplitude. With the oscilloscope readout, quantitative signal amplitude data may be obtained for correlation with crack depth.

RESULTS AND DISCUSSION

Inasmuch as this project did not include a gun tube firing program involving MRB inspections, there are no particular scan records or test results which require discussion in this report. However, the MRB models designed for this project were tested in actual gun tubes and gun tube sections in order to evaluate the mechanical functioning of the scanning mechanisms. For the purpose of illustrating the various data display options described in the previous section, selected scan records collected during the functioning tests will be presented as examples of typical inspection records.

Inspection Records

Figure 14 shows corresponding strip chart, facsimile, and signal amplitude recordings taken with the model VI scanning mechanism in a smooth bore chamber section of 175-mm M113E1 gun tube No. 4130. This scan record was selected because it is a dramatic illustration of the magnitude of magnetic leakage fields associated with actual fatigue cracks of significant depth. The gun tube was originally fired a total of 2403 zone-3 rounds during the 175-mm prototype autofrettaged firing program at APG and no significant fatigue cracks were detected throughout the entire firing schedule. It was then machined into a fatigue specimen and subjected to an additional 7557 laboratory hydraulic pressure cycles at Watervliet Arsenal. The section used for the MRB scan records was the remaining portion of the chamber fatigue specimen (28" to 51" from the breech end) which had not ruptured and which had developed a number of fatigue cracks ranging in depth from 1/4 inch to over 1-1/4 inches as a result of the additional pressure cycles. A 12-inch length of the fatigue specimen was scanned to produce the records shown in Figure 14. Signal amplitudes were recorded at 2-inch intervals whereas the strip chart and facsimile records are continuous recordings of the total length scanned. This figure will also serve to illustrate several features common to all MRB records.

The width of the facsimile record, or one scan line, represents the circumference of the tube. The twelve graduations on the horizontal axis assist in locating angular position as indicated at the top of the record. The length of the recording is linearly related to the longitudinal traverse of the scanning head and the vertical distance between each graticule line is approximately equal to one inch of tube length. Intensity position marks are inserted at 2-inch intervals along the right-hand margin for longitudinal position determinations. The

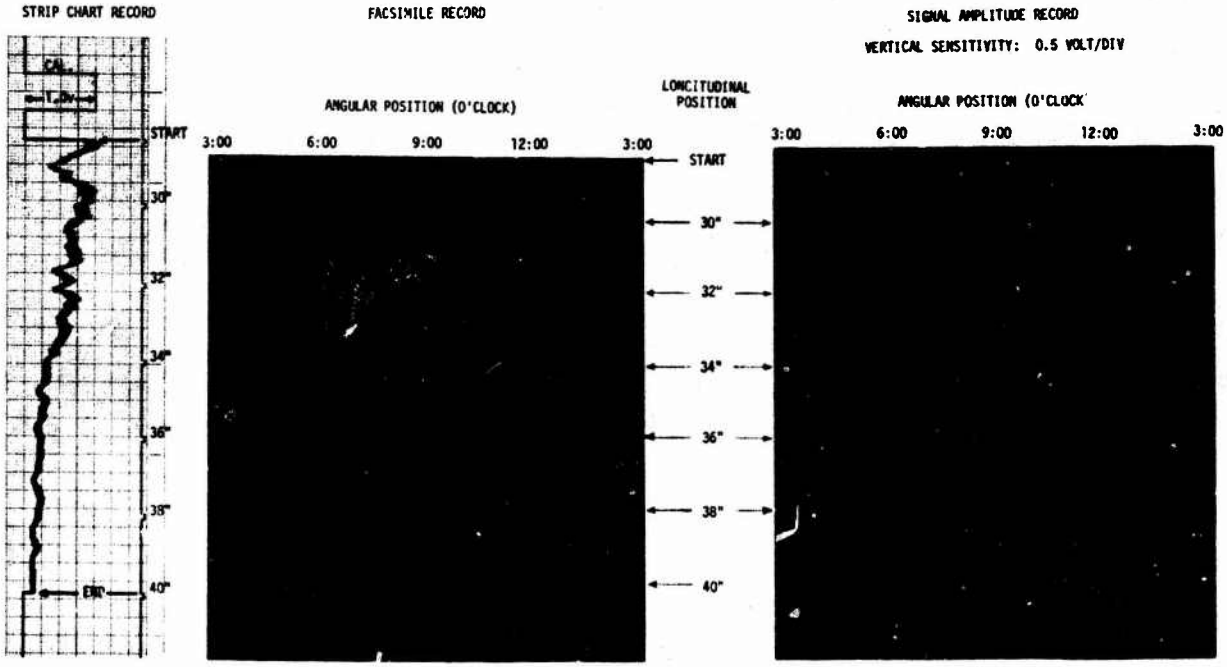

Figure 14. COMPOSITE RESULTS GENERATED WITH THE MODEL VI SCANNING MECHANISM IN A 175-MM SMOOTH BORE CHAMBER SECTION

third dimension provided on the recording is marking intensity which is directly proportional to the detected signal level. The notable difference in the signal amplitude recording is that the actual detected signal, recorded at a given longitudinal position, is displayed quantitatively on the vertical axis. In this case, the vertical spacing between adjacent graticule lines defines the vertical sensitivity scale factor which is expressed in units of volts per division. Each trace represents one revolution of the detector head and each trace was recorded at discrete 2-inch intervals of longitudinal traverse. To appreciate the magnitude of the leakage fields detected in this particular fatigue specimen, the indicated vertical sensitivity of 0.5 volt/division is equivalent to 60 gauss/division. On the strip chart record, a calibration signal is set to a preselected deflection by adjusting the sensitivity of the recorder prior to recording. The marker channel at the right edge of the strip chart indicates longitudinal position at 2-inch intervals. The resulting deflection from the zero-signal base line (at the left side of the record) is produced by the highest amplitude signal detected during each circumferential sweep of the scanning head.

A second example was selected to illustrate typical recordings obtained from scanning the rifled portion of a gun tube. Figure 15 shows corresponding recordings near the muzzle end of 90-mm M41 gun tube No. 75764 collected during the functioning tests of the model VIII scanning mechanism. Although a complete scan of the entire length of the tube was recorded, only the final portion (160" to 170") is

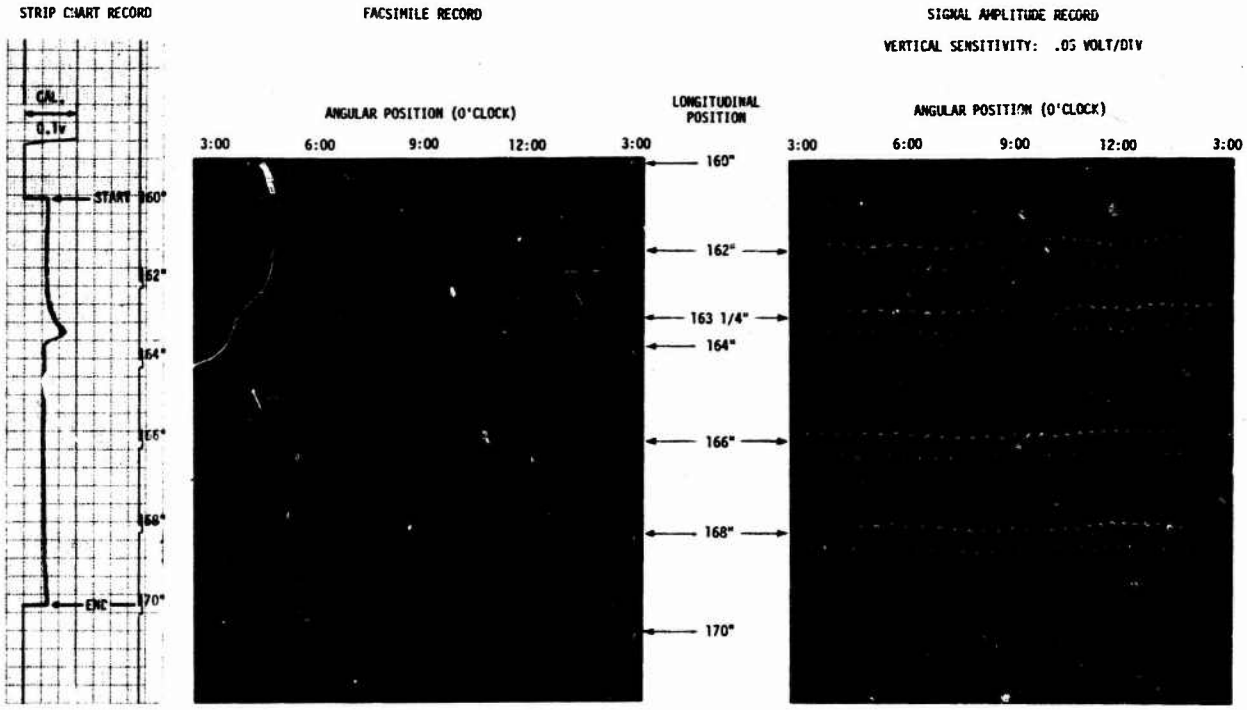

Figure 15. COMPOSITE RESULTS GENERATED WITH THE MODEL VIII SCANNING MECHANISM NEAR THE MUZZLE END OF A 90-MM GUN TUBE

displayed in the figure for the purpose of illustrating a defect signal detected in the rifling at approximately 163-1/4 inches from the breech end of the tube. The various record markings are similar to those described for Figure 14, except the vertical sensitivity of the signal amplitude record was increased 10X to 0.05 volt/division. A noticeable difference, however, is the generated rifling signal produced by magnetic leakage between adjacent lands. This signal appears as a uniform pattern in the facsimile record and as a relatively constant deflection from the base line in the strip chart record. The defect signal is readily discernable in each of the three recordings. Both MRB scans were originally collected on magnetic tape and subsequently played back through the signal processing amplifiers to produce the recordings illustrated in Figures 14 and 15.

Inspection Procedures

Procedures for performing the actual mechanics of MRB inspections will vary with the caliber and design of the gun tube being tested, with the firing history of the gun tube, and with the nature of the test program. Therefore, a step-by-step operating procedure will not be included as part of this report. However, as a guide, complete instructions for operating the MRB models V and VII appear in the Appendixes of References 5 and 7. These instructions will give the interested reader sufficient details for establishing operating procedures for the MRB models VI and VIII. One of the more important features of the recording instrumentation

is the capability of collecting all scan records on magnetic tape for permanent data storage. This step is considered to be an essential part of the inspection procedures as it has proven to be an invaluable practice for the subsequent analysis of test results. Other factors also found to be important in practice include: the thorough cleaning of the gun tube to remove firing residues prior to each inspection; the stabilization and calibration of instrumentation prior to recording; the use of trained technicians as operating personnel who preferably are also familiar with magnetic particle inspection techniques; the establishment of a constant magnetizing level for each gun tube design; and the magnetization of each gun tube prior to inspection because subsequent firing has been found to substantially demagnetize the gun tube.

Crack Depth Correlation

Although the quantitative correlation between detected signal amplitude and crack depth has been the foremost single objective of the previous MRB programs, it has also been the most elusive due mainly to the lack of suitable gun tubes containing actual fatigue cracks which can be sectioned for correlation studies. Laboratory investigations with artificial cracks in the form of milled slots have produced excellent crack depth-signal amplitude correlation but, unfortunately, magnetic leakage fields associated with milled slots are more intense than from tight fatigue cracks. As the result of a brittle failure at the completion of the first 175-mm firing program involving the early non-autofrettaged tubes, only one fragment was recovered from the area of the gun tube scanned with the MRB. Signal amplitude measurements had been recorded at known longitudinal positions. However, the fact that the exact longitudinal position of the fragment could only be estimated when cutting cross-sections for crack measurements, and the fact that most cracks were not radial but were curved and intersected the bore surface at an angle other than normal, contributed significantly to data scatter of correlation results. In the two following 175-mm firing programs involving the new autofrettaged tubes, no significant fatigue cracks were detected in any of the tubes throughout the entire firing schedules. Although these findings were extremely encouraging from a fatigue-life standpoint, no further crack depth correlation data was attained.

Recently, however, a notable advance in crack depth correlation for 175-mm tubes was contributed by APG as the result of an evaluation study of the model V MRB.[9] APG has been using this model continually for the past two years for the routine inspection of 175-mm gun tubes. Significant fatigue cracks were detected in three different tubes which were subsequently sectioned for crack depth-signal amplitude correlation. The outcome was most promising inasmuch as the resulting correlation indicated that crack depths in the range of 0.25 inch to 0.68 inch can be predicted to within 0.052 inch. This study also revealed that most of the cracks occurring in the rifled portion of the tubes were noticeably nonradial. Additional correlation data will be forthcoming as the result of the scanning records shown in Figure 14 of the 175-mm autofrettaged fatigue specimen. The specimen is presently being sectioned at precise longitudinal positions for crack depth measurements and the resulting data will be included in a later report.

It should be noted that a signal amplitude-crack depth calibration curve established for the 175-mm gun tube will not necessarily be applicable to other gun tubes having different dimensions, material, and strength levels. Therefore, similar correlation programs should be initiated for other caliber gun tubes.

MRB Limitations

As with most nondestructive testing methods, there are generally some limitations that restrict the accuracy to which a desired variable can be measured. In the case of the Magnetic Recording Borescope method, probably the most important factor limiting the accuracy of measuring crack depth is the level of residual magnetism retained upon removal of the applied magnetizing field. Although a constant magnetizing current is always maintained in practice, the level of residual magnetism is dependent on the B-H characteristics of the steel which will vary from tube to tube with composition, thermal history, and strength level. In addition, a local variation in residual stress also affects residual magnetism and is dependent on the amount of plastic deformation introduced by the straightening operations required during the machining process of the finished tube. This effect similarly varies from tube to tube and is quite apparent in some MRB recordings because of its local nature.[5] At present, there is no suitable technique available for measuring the circumferential residual field contained within a closed loop which could be used to determine a correction factor for signal amplitude measurements.

Other factors influencing the measurement of crack depth include the width or tightness of a crack in the environment of a compressive residual stress resulting from the autofrettage process and the effect of a nonradial crack on the associated leakage field. Both of these factors, however, are currently being investigated and results will be reported at a later date. The possible need to establish calibration factors for each gun tube design is a less significant limitation because it can be resolved through future correlation studies.

Notwithstanding the recognized limitations, the Magnetic Recording Borescope method represents the current state-of-the-art in the detection and assessment of fatigue damage in the bore of cannon tubes and, most important, it has been reduced to practice. Accordingly, Aberdeen Proving Ground concluded at the completion of their evaluation study that the MRB is the best available nondestructive testing instrumentation for locating and measuring cracks within the 175-mm gun tube as it outperformed both ultrasonic and black-light borescope inspection methods.[9]

CONCLUSIONS

A Magnetic Recording Borescope instrumentation system with extended capability for adaptation to a variety of cannon tubes ranging from 90 mm to 175 mm has been developed. A working prototype model consisting of two scanning mechanisms has been designed and fabricated complete with engineering drawings. Within the bounds of the reported limitations, the method provides a practical technique for determining the location and relative severity of service-induced fatigue cracks throughout the entire bore surface of a cannon tube. Only one scanning operation yields visual and recorded forms of data which provides the immediate assessment of fatigue damage and the subsequent detailed analysis of data under laboratory conditions. The incorporation of a Hall device as the MRB detector element has provided a significant advantage in the analysis of detected signals. The versatility and practical effectiveness of the signal processing and readout instrumentation was demonstrated by the various recordings illustrated in Figures 14 and 15.

RECOMMENDATIONS

It is recommended that:

1. A working model of the new MRB instrumentation system by made available to Aberdeen Proving Ground for the continued inspection of other caliber cannon tubes in addition to the 175 mm.

2. A program be initiated to develop crack depth-signal amplitude correlation data for cannon tubes included within the capability of the new MRB instrumentation system.

3. A suitable method be developed for measuring the level of retained magnetism in a circumferentially magnetized gun tube for the purpose of determining correction factors for signal amplitude measurements.

4. A technical data package (TDP) be prepared for the procurement of additional MRB instrumentation systems.

ACKNOWLEDGMENT

The successful completion of this project depended on the invaluable contributions of Mr. Wendell Canada who was responsible for the mechanical design details and the preparation of all engineering drawings.

LITERATURE CITED

1. HASTINGS, C. H. *The Development of a Flaw Detector for the Bore Surface of Gun Tubes.* Army Materials and Mechanics Research Center, WAL TR 732/114-1, August 1946.

2. HASTINGS, C. H., DARCY, G. A., and MCFLENEY, P. C. *Crack Depth Measurements in Powder Chambers of Cannon.* Army Materials and Mechanics Research Center, WAL TR 732/123, June 1953.

3. FOWLER, K. A., et al, *Preliminary Results of Magnetic Recording Borescope Inspection of the M113 175-mm Gun Tube for Fatigue Cracks.* Army Materials and Mechanics Research Center, Letter Report, 25 July 1967.

4. CARR, F. L., et al, *Metallurgical Examination of 175-mm M113 Gun Tubes.* Army Materials and Mechanics Research Center, AMMRC TR 67-13, May 1967.

5. HATCH, H. P. *Magnetic Recording Borescope Inspection Results of Autofrettage 175-mm Cannon Tube.* Army Materials and Mechanics Research Center, Letter Report APB-2, February 1969.

6. DAVIDSON, T. E., et al, *The Fatigue Characteristics of the 175-mm M113E1 Gun Tube.* Watervliet Arsenal, WVT TR 6912, March 1969.

7. HATCH, H. P., and GRUBINSKAS, R. C. *Magnetic Recording Borescope Inspection Results of the 175-mm M113E1 Gun Tube Special Test for Service Life.* Army Materials and Mechanics Research Center, AMMRC TR 70-23, June 1970.

8. PUTLEY, E. H. "The Hall Effect and Semi-Conductor Physics." Dover Publications, Inc., New York, 1968.

9. FINFERA, J. P. *Materials Testing Technology Test of the Magnetic Recording Borescope.* Aberdeen Proving Ground, APG-MT-3725, January 1971.

APPENDIX

1. Schematic of Control Console
2. Wiring Diagram of Model VI Scanning Mechanism
3. Wiring Diagram of Model VIII Scanning Mechanism
4. Schematic of Signal Processing Amplifiers
5. Wiring Diagram of Interconnecting Cables

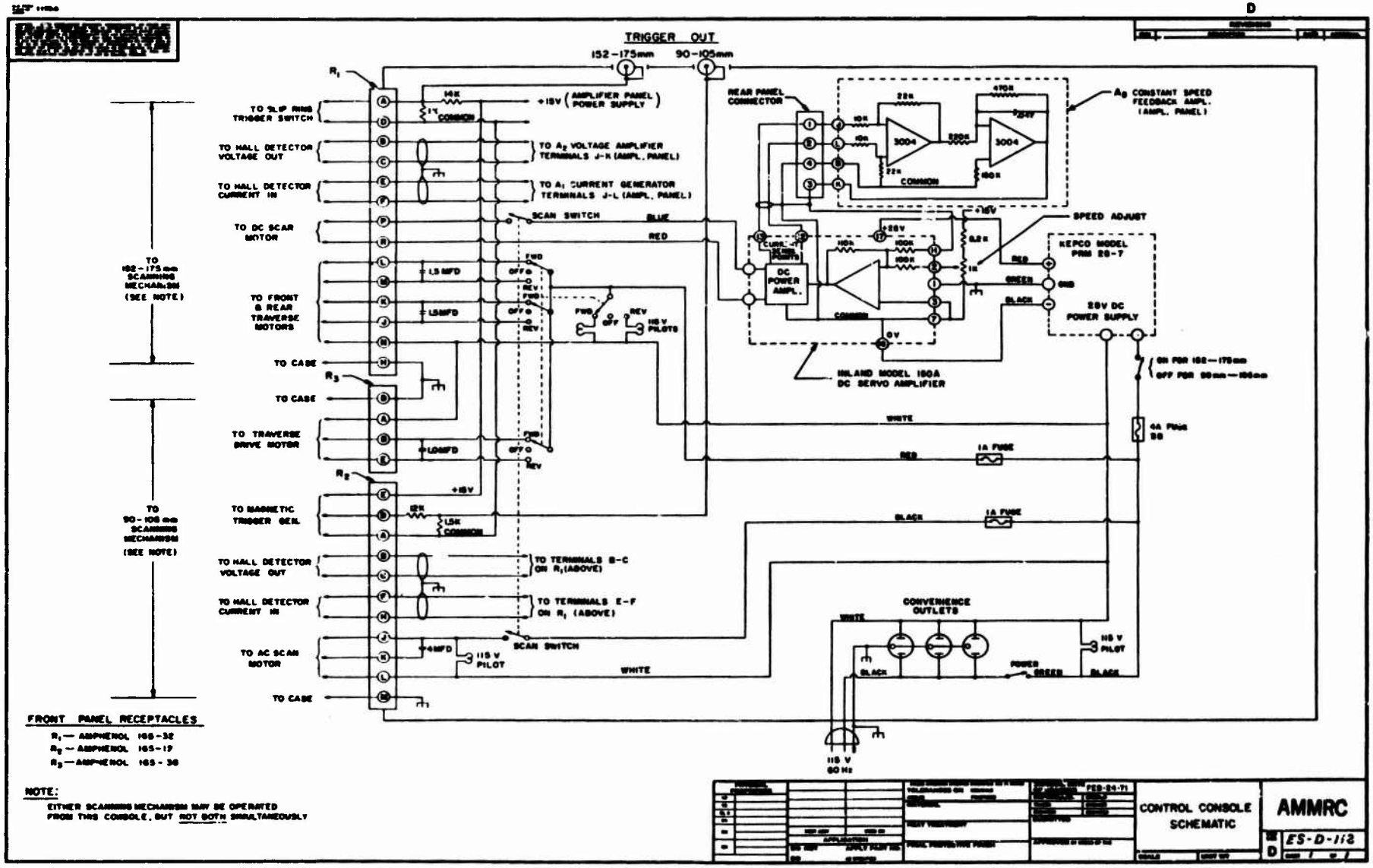
TRIGGER OUT
152-175mm
90-105mm
TO SLIP RING TRIGGER SWITCH
TO HALL DETECTOR VOLTAGE OUT
TO HALL DETECTOR CURRENT IN
TO DC SCAN MOTOR
TO FRONT & REAR TRAVERSE MOTORS
TO CASE
TO TRAVERSE DRIVE MOTOR
TO MAGNETIC TRIGGER COIL
TO AC SCAN MOTOR
TO 152-175 mm SCANNING MECHANISM (SEE NOTE)
TO 90-105 mm SCANNING MECHANISM (SEE NOTE)
+15V (AMPLIFIER PANEL POWER SUPPLY)
TO A2 VOLTAGE AMPLIFIER TERMINALS J-K (AMPL. PANEL)
TO A1 CURRENT GENERATOR TERMINALS J-L (AMPL. PANEL)
SCAN SWITCH
BLUE
RED
TO TERMINALS B-C ON R1 (ABOVE)
TO TERMINALS E-F ON R1 (ABOVE)
115 V PILOT
WHITE
REAR PANEL CONNECTOR
A0 CONSTANT SPEED FEEDBACK AMPL. (AMPL. PANEL)
3004
COMMON
SPEED ADJUST
KEPCO MODEL PRM 20-7
GREEN
BLACK
28V DC POWER SUPPLY
DC POWER AMPL.
INLAND MODEL 150A DC SERVO AMPLIFIER
ON FOR 152-175mm
OFF FOR 90mm-105mm
4A FUSE
1A FUSE
CONVENIENCE OUTLETS
POWER
115 V 60 Hz
FRONT PANEL RECEPTACLES
R1 — AMPHENOL 165-32
R2 — AMPHENOL 165-17
R3 — AMPHENOL 165-36
NOTE:
EITHER SCANNING MECHANISM MAY BE OPERATED FROM THIS CONSOLE, BUT NOT BOTH SIMULTANEOUSLY
CONTROL CONSOLE SCHEMATIC
AMMRC
ES-D-112
D

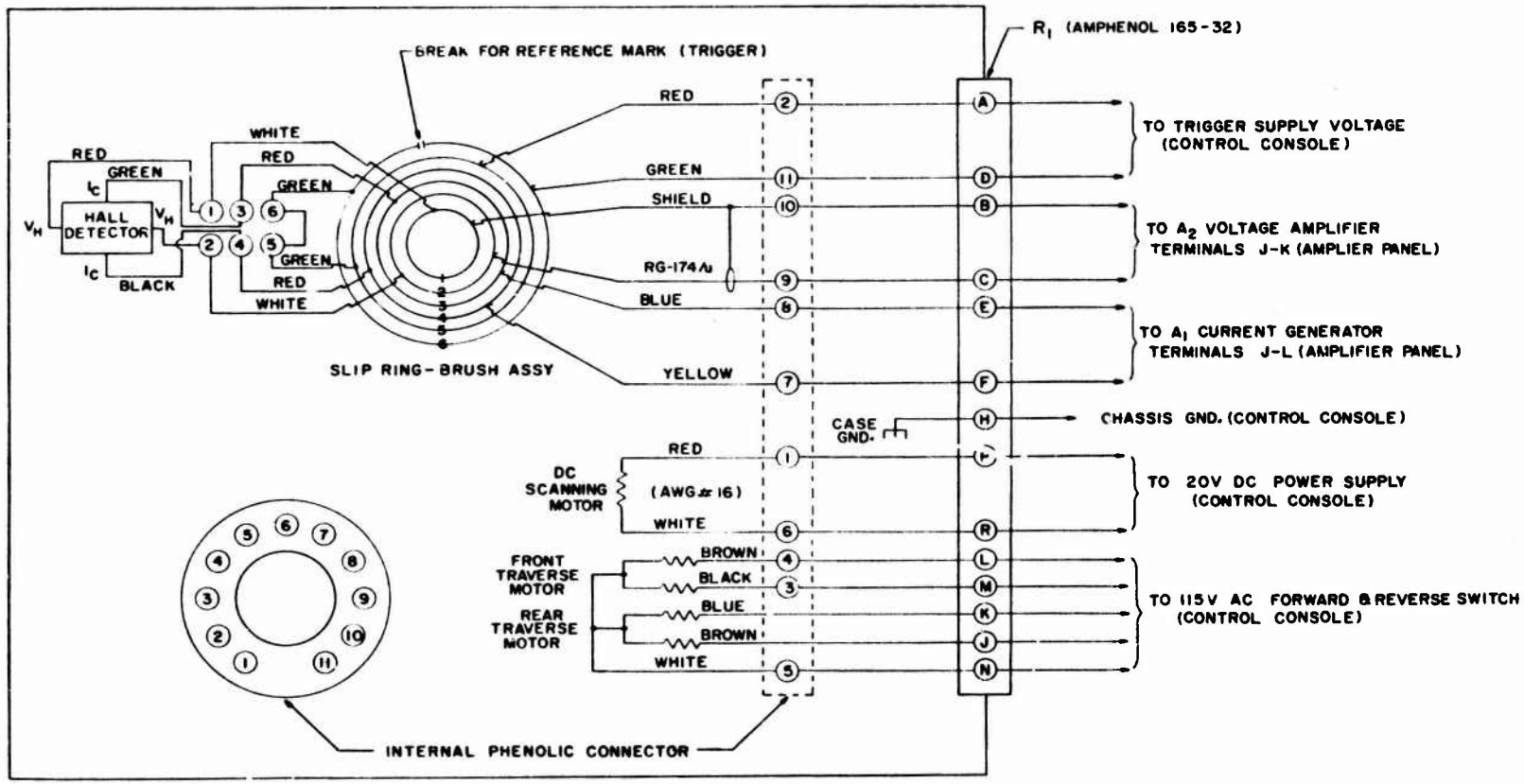

REVISIONS

SYM	DESCRIPTION	DATE	APPROVAL

TOLERANCE'S ON	MATERIAL
HEAT TREATMENT	
FINAL PROTECTIVE FINISH	
APPLICATION	
DO NOT	APPLY PART NO.
DO	AS SPECIFIED
ORIGINAL DATE OF DRAWING	MAR.-1-71
SUBMITTED	

WIRING DIAGRAM
152-175mm SCANNING MECHANISM

AMMRC

C FS-C-113

SCALE | UNIT WT | SHEET 1 OF 1

REVISIONS			
SYM	DESCRIPTION	DATE	APPROVAL

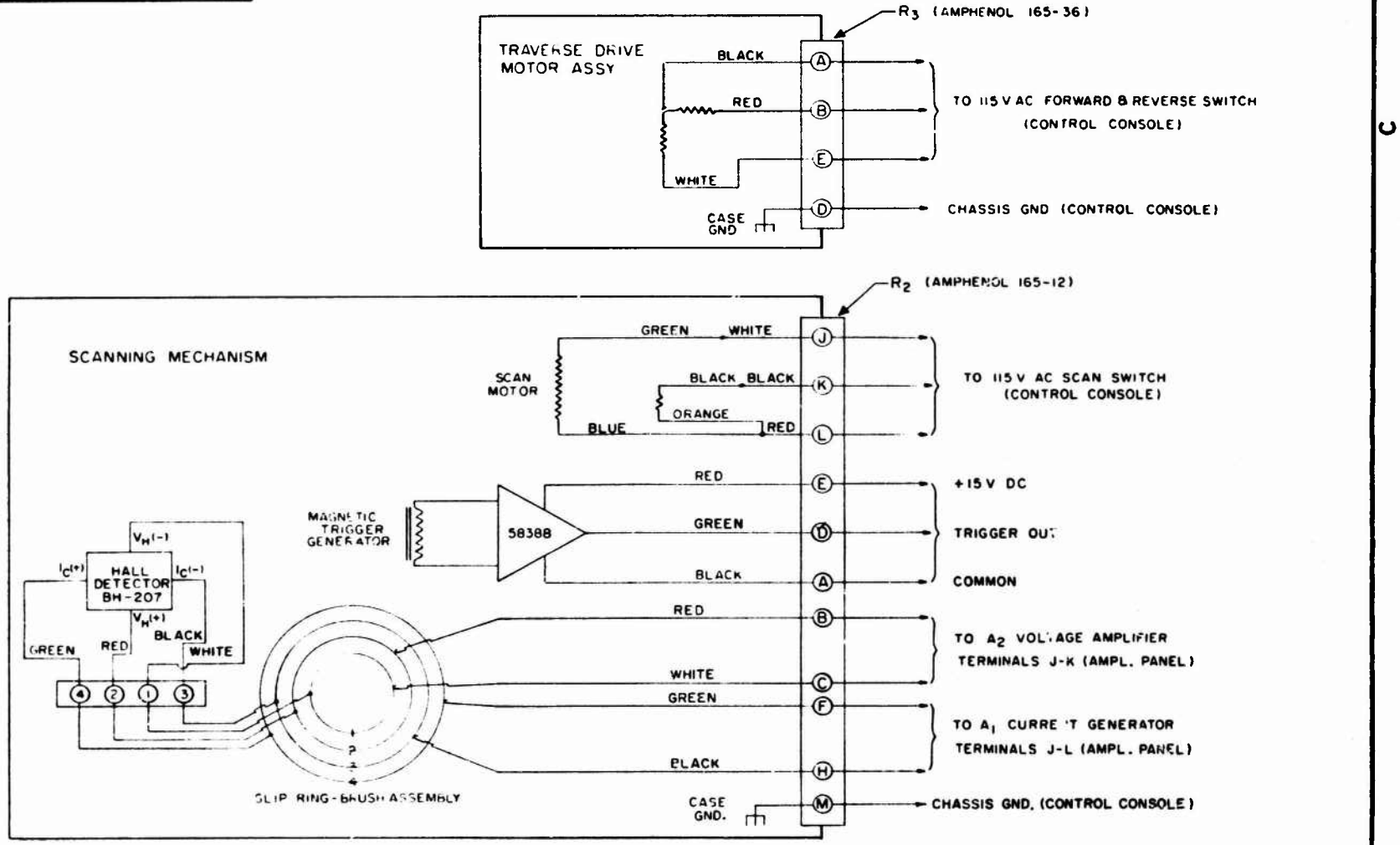

PHYSICAL PROPERTIES					
TOLERANCES ON DECIMALS ——— ANGLES ——— FRACTIONS ———	ORIGINAL DATE OF DRAWING 25 JAN. 71	WIRING DIAGRAM 90-105 mm SCANNING MECHANISM	AMMRC		
MATERIAL	DRAWN	CHECKED			
HEAT TREATMENT	ENGINEER	ENGINEER			
APPLICATION	SUBMITTED				
DO NOT APPLY PART NO	FINAL PROTECTIVE FINISH	APPROVED BY ORDER OF THE CHIEF OF	SCALE ———	UNIT WT	SIZE C — EC-C-25-67 — SHEET 1 OF 1
DO AS SPECIFIED					

C

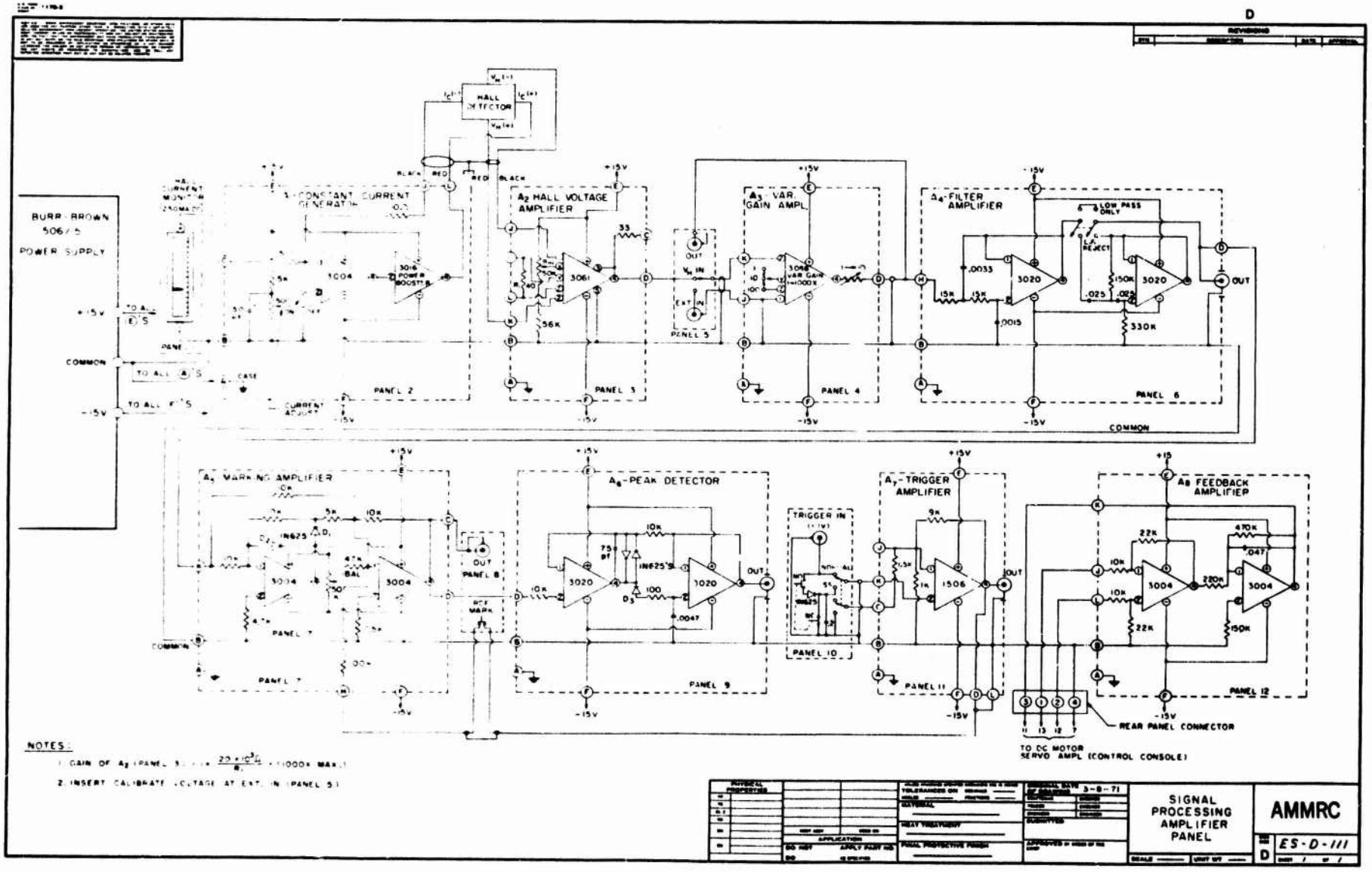
BURR-BROWN 506/5 POWER SUPPLY
+15V
COMMON
-15V
HALL DETECTOR
A1 CONSTANT CURRENT GENERATOR
PANEL 2
A2 HALL VOLTAGE AMPLIFIER
PANEL 3
A3 VAR. GAIN AMPL.
PANEL 4
A4 FILTER AMPLIFIER
PANEL 6
A5 MARKING AMPLIFIER
PANEL 7
A6 PEAK DETECTOR
PANEL 9
TRIGGER IN
PANEL 10
A7 TRIGGER AMPLIFIER
PANEL 11
A8 FEEDBACK AMPLIFIER
PANEL 12
REAR PANEL CONNECTOR
TO DC MOTOR SERVO AMPL (CONTROL CONSOLE)
NOTES:
1. GAIN OF A2 (PANEL 3) = 23 x 10^3/R1 (1000X MAX.)
2. INSERT CALIBRATE VOLTAGE AT EXT. IN (PANEL 5)
SIGNAL PROCESSING AMPLIFIER PANEL
AMMRC
ES-D-111
D

REVISIONS

SYM	DESCRIPTION	DATE	APPROVAL

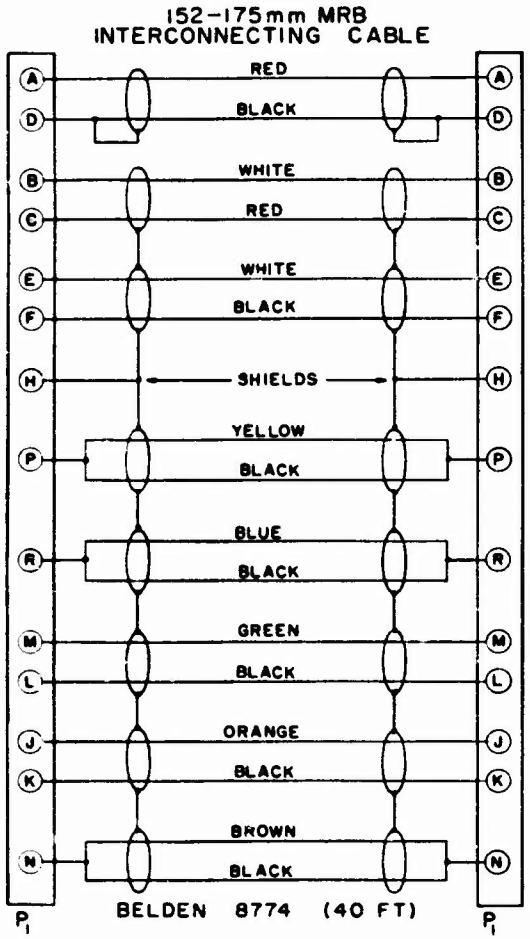

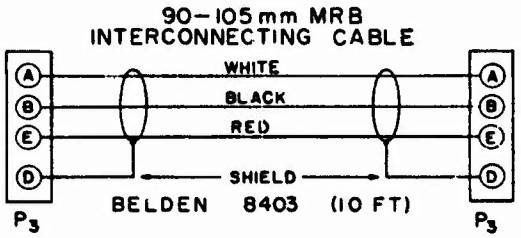

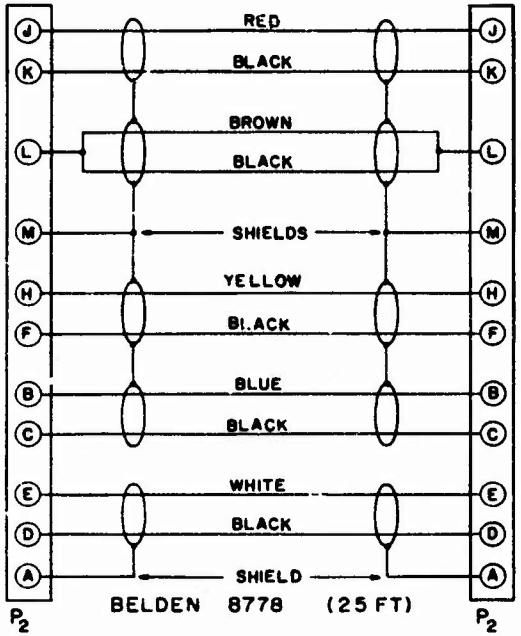

PLUG CONNECTORS

P_1-AMPHENOL 165-29

P_2-AMPHENOL 165-9

P_3-AMPHENOL 165-33

PHYSICAL PROPERTIES			
TOLERANCES ON DECIMALS ANGLES FRACTIONS	ORIGINAL DATE OF DRAWING FEB. 25-71	WIRING DIAGRAM INTERCONNECTING CABLES	AMMRC
MATERIAL	TRACED / CHECKED / DRAWN / ENGINEER		
HEAT TREATMENT	SUBMITTED		SIZE C / ES-C-114
FINAL PROTECTIVE FINISH	APPROVED BY ORDER OF THE CHIEF OF	SCALE / UNIT WT	SHEET 1 OF 1

APPLICATION

DO NOT APPLY PART NO.

DO AS SPECIFIED

C