AD

RE-TR-71-79

AD736856

FEASIBILITY STUDY OF THE SPUTTERING OF COATINGS ONTO THE 4.32MM BARREL BORE

TECHNICAL REPORT

D D C
FEB 24 1972

December 1971

RESEARCH DIRECTORATE

WEAPONS LABORATORY AT ROCK ISLAND

RESEARCH, DEVELOPMENT AND ENGINEERING DIRECTORATE

U. S. ARMY WEAPONS COMMAND

Reproduced by
NATIONAL TECHNICAL
INFORMATION SERVICE
Springfield Va 22151

Approved for public release, distribution unlimited.

25

DISPOSITION INSTRUCTIONS:

Destroy this report when it is no longer needed. Do not return it to the originator.

DISCLAIMER:

The findings of this report are not to be construed as an official Department of the Army position unless so designated by other authorized documents.

ACCESSION for
NTIS White Section
DDC Buff Section
UNANNOUNCED
JUSTIFICATION
BY
DISTRIBUTION/AVAILABILITY CODES
DIST. AVAIL. and/or SPECIAL
A

Unclassified

Security Classification

DOCUMENT CONTROL DATA - R & D

(Security classification of title, body of abstract and indexing annotation must be entered when the overall report is classified)

1. ORIGINATING ACTIVITY *(Corporate author)*
Physics Technology Laboratories, Inc.
7841 El Cajon Boulevard
La Mesa, California 92041

2a. REPORT SECURITY CLASSIFICATION
Unclassified

2b. GROUP

3. REPORT TITLE
FEASIBILITY STUDY OF THE SPUTTERING OF COATINGS ONTO THE 4.32MM BARREL BORE (U)

4. DESCRIPTIVE NOTES *(Type of report and inclusive dates)*

5. AUTHOR(S) *(First name, middle initial, last name)*
Patrick A. Harkins

6. REPORT DATE
December 1971

7a. TOTAL NO. OF PAGES
26

7b. NO. OF REFS
1

8a. CONTRACT OR GRANT NO.
DAAF03-71-C-0299

b. PROJECT NO.
DA 1W563607D633

c.
AMS Code 553F.12.816

d.

9a. ORIGINATOR'S REPORT NUMBER(S)
A-0097

9b. OTHER REPORT NO(S) *(Any other numbers that may be assigned this report)*
RE-TR-71-79

10. DISTRIBUTION STATEMENT
Approved for public release, distribution unlimited.

11. SUPPLEMENTARY NOTES

12. SPONSORING MILITARY ACTIVITY
U. S. Army Weapons Command
Research, Dev. and Eng. Directorate
Rock Island, Illinois 61201

13. ABSTRACT

As part of a task to develop an erosion resistant 4.32mm (.17 Caliber) gun barrel delegated to the Research Directorate, Weapons Laboratory, Rock Island, a feasibility study was conducted to determine whether a technique could be established for sputtering a coating in the bore. A movable electrode technique was developed which appeared to be practical. In this technique the target was placed inside the bore and was moved along the length of the barrel while the sputtering action was occurring. Under controlled sputtering parameters (gas pressure, target potential, target current and target movement), this technique has a projected capability of the deposition of a uniform thickness of coating. Several other sputtering techniques were investigated and were generally unsuccessful in the accomplishment of a working procedure. (U) (Harkins, Patrick A.)

DD FORM 1 NOV 65 1473 REPLACES DD FORM 1473, 1 JAN 64, WHICH IS OBSOLETE FOR ARMY USE.

Unclassified

Security Classification

Unclassified

Security Classification

14. KEY WORDS	LINK A ROLE	LINK A WT	LINK B ROLE	LINK B WT	LINK C ROLE	LINK C WT
1. 4.32mm Gun Barrel						
2. Sputter Coating Technique						
3. Gun Barrel Coating						

Unclassified

Security Classification

AD

RESEARCH DIRECTORATE

WEAPONS LABORATORY AT ROCK ISLAND

RESEARCH, DEVELOPMENT AND ENGINEERING DIRECTORATE

U. S. ARMY WEAPONS COMMAND

TECHNICAL REPORT

RE-TR-71-79

FEASIBILITY STUDY OF THE SPUTTERING OF COATINGS ONTO THE 4.32MM BARREL BORE

December 1971

DA 1W563607D633

AMS Code 553F.12.816

Approved for public release, distribution unlimited.

FOREWORD

This report was prepared by Patrick A. Harkins, Physics Technology Laboratories, Inc., La Mesa, California, under Contract DAAF03-71-C-0299.

The contract was part of a project for the development of a 4.32mm barrel. This program was authorized and funded by the U. S. Army Small Arms System Agency.

The work was conducted under the technical supervision of the Research Directorate, Weapons Laboratory at Rock Island, U. S. Army Weapons Command, with Russell H. Wolff acting as project engineer.

ABSTRACT

As part of a task to develop an erosion resistant 4.32mm (.17 Caliber) gun barrel delegated to the Research Directorate, Weapons Laboratory, Rock Island, a feasibility study was conducted to determine whether a technique could be established for sputtering a coating in the bore. A movable electrode technique was developed which appeared to be practical. In this technique the target was placed inside the bore and was moved along the length of the barrel while the sputtering action was occurring. Under controlled sputtering parameters (gas pressure, target potential, target current and target movement), this technique has a projected capability of the deposition of a uniform thickness of coating.

Several other sputtering techniques were investigated and were generally unsuccessful in the accomplishment of a working procedure.

CONTENTS

	Page
Conclusions and Recommendations	17
Distribution	20
DD Form 1473 (Document Control Data - R&D)	25

LIST OF FIGURES

Figure		Page
1	Movable Electrode Technique	5
2	Twc Electrodes Movable	5
3	Sputter-deposited tungsten film, 1040X	8
4	Sputter-deposited copper film, 1040X	9
5	Sputter-deposited chromium film, 520X	10
6	Voltage to Initiate Discharge vs. Chamber Pressure for Two Electrode Spacings	13
7	Capillary Discharge Experiment	15

OBJECTIVE

The usable life of small arms could be extended, and the reliability of these weapons improved if barrels were fabricated of materials more resistant to erosion and corrosion than of materials presently used. An alternate and more economical approach would be to develop a method for coating bores of small arms with a layer of material for equivalent protection. Therefore, the objective of this program was to investigate a number of sputtering techniques proposed as applicable for coating the 4.32mm bore.

INTRODUCTION

In spite of all the advancements in small arms, bore erosion as well as heat-checking is a persistent problem. The advent of higher performance (muzzle velocity) weapons, caseless ammunition, and operations in swampy, tropical environments has accentuated this problem. Consequently, a definite need exists to develop a means by which excessive maintenance requirements can be reduced by barrel linings having increased resistance to high-temperature propellant gases, oxidation, and thermal shock.

Many processes exist, such as electroplating, evaporation, chemical or vapor transport-processes, but all these methods have one or more inherent deficiencies. For example, some techniques require elevated temperatures for the deposition of the materials. This almost completely eliminates some of the best materials whose prime advantage is a high boiling-point, such as refractory metals or silica, alumina and beryllia. Further, because of variations in boiling point, stoichiometry cannot be maintained when alloys are being deposited. Another problem is encountered with the geometry of the gun bore. The relatively long bore in proportion to the small diameter creates difficulties with the migration of depositing atoms. Even if all internal surfaces can be reached, film uniformity and thickness cannot be controlled with any of the conventional processes. Finally, a problem common to all these techniques is that of the attainment of appropriate bond strength, which must be the highest possible for this application.

Sputter deposition offers advantages as a method for coating bores of small arms. In sputtering, three steps generally occur: (1) Ions are produced in a gas discharge. (2) Ions are accelerated to and bombard the surface of a target material to be deposited. (3) Neutral atoms are

removed from this target surface and are deposited on the bore. One interesting advantage of the sputtering method is that unique alloys or composites can be formed by sputtering of several different target materials simultaneously onto a substrate. The quantity of each material in the alloy can be controlled accurately by alteration of target potential or target size. Because the deposited surfaces are built up atom-layer-by-atom-layer, not any one material is required to be soluble in another material to form unique alloys.

Sputtering is extremely flexible, not only in the variety of materials compatible with the process, but also with the variation in techniques that can be used. For example, the substrate is often sputtered off before deposition so that the coating is applied to atomically clean surfaces. In addition, low rate sputtering of the substrate can be continued throughout the deposition process (bias sputtering), activating the surface (without elevating substrate temperature) and causing epitaxial growth. The basic sputtering process, with its atom-layer-by-atom-layer deposition, accounts for extremely high bond-strengths to parent materials. The additional features of atomically clean substrates and the activated surfaces (all in the same production step) provide bond strengths far greater than those which are possible with conventional coating processes. Finally, because material is sputtered off the target (atom-layer-by-atom-layer) and deposited upon the substrate in the same manner, stoichiometry is easily maintained.

METHOD OF APPROACH

Several techniques for sputter deposition of metal films in small gun-bores were investigated. The primary advantage of the sputter technique results from the relatively high energy of the sputtered atoms (10 - 100 times the energy of thermal atoms). Films formed by the higher energy atoms have improved adhesion and density.

The sputtered atoms are ejected from surfaces that are bombarded by ions (energy $\sim$50 to several thousand electron volts). The number of atoms ejected for each impinging ion is a function of the ion specie, material bombarded, angle of incidence of the ions, and ion energy; and, in the case of single crystals, the crystal orientation is important. The temperature of the surface being bombarded is not a critical parameter at temperatures normally encountered when films are being deposited.

Sputtering techniques differ in the manner in which ions are produced and accelerated to the target or surface to be sputtered. Several techniques have been evaluated to determine their suitability for forming protective coatings in small bores. The sputtering techniques were evaluated experimentally and analytically. Each approach required an experimental buildup of equipment and circuits. The major part of this work was carried out on a 2-inch-diameter oil diffusion pump vacuum system with a capacity to reach 5×10^{-6} Torr. The test chamber was evacuated and then backfilled with argon to pressure from 0.01 to 0.5 Torr. Several rare gases were considered for use in these tests. The heavier rare gases offer the advantage of larger electron-atom cross sections and a higher probability of ionization at the pressures being considered. Argon was selected. Although this is not so heavy as krypton, it is more readily available and less expensive. Copper, chromium and tungsten were selected for electrode materials. Copper has a high sputtering yield and therefore would form a deposit early in the experiment that is readily identified by the copper color. Chromium was selected because it is presently used as a bore coating, and tungsten was chosen as an example of a refractory metal with desirable properties.

In each configuration considered for coating small bores, except for the ion beam approach, an ionized gas must be produced in the vicinity of the target electrode. The gas discharge region must be self-maintaining and continue to exist when the target electrode is withdrawn into the bore. Initiation of the discharge occurs as a function of applied voltage, pressure, and electrode separation according to the Paschen curve.[1] At higher Pd products (P is the pressure and d the electrode gap), the curve follows Paschen's Law, $V = kdP$. For lower pressures, the voltage reaches a minimum and then increases. The Paschen curve applies particularly to spark breakdown between large plane parallel electrodes. The curve was taken during this study with the use of a surface representing the bore surface and a probe similar to the target electrode. The curve shape remained the same for comparable Pd products.

[1] Gaseous Conductors, J. D. Cobine, pp 164, Dover Publications, New York.

A self-maintaining discharge is established only when the conditions of field, pressure, and gap are such that each electron leaving the cathode establishes secondary processes by which it is replaced by a new electron leaving the cathode. Electrons for maintaining the discharge are produced at the negative electrode as secondary electrons resulting from ion bombardment. The mean free path for an electron must be less than the electrode separation if sufficient gas atoms are to be ionized to maintain the discharge and provide a high density of ion current for sputtering. The mean free path for electrons is more than five times that of the background gas atoms. If the pressure is increased to a value calculated to increase the electron-atom probability of ionization the sputtered atom-gas atom collisions will result in a loss of energy by the sputtered atoms and they will be scattered. The scatter-formed deposit will be porous and of low density. The bore-film interface will be further complicated by the constant flux of gas atoms that arrive at the surface. For example, the flux of background atoms will form one atom layer in $10^{-[illegible]}$ seconds (the assumption being accommodation coefficient of unity) if the pressure is $10^{-[illegible]}$ Torr. Thus the amount of occluded gas in a deposited film increases with the system pressure. From these considerations, the conclusion was that the two initial criteria for proceeding with any of the techniques were: (1) the capacity to produce a self-maintaining discharge at the electrode within a 4.32mm bore, and (2) the resulting sputtered film be produced at a background pressure low enough to result in a dense metallic film.

An extensive investigation of film properties and materials was beyond the scope of this program. Metallographic examinations were made of films after 4.32mm steel tubing and 4-mm and 6-mm pyrex tubing was sectioned.

RESULTS AND DISCUSSION

A Movable Electrode Technique

(1) Description of Movable Electrode Technique (MET)

The geometry of the MET is illustrated in Figure 1. In the first configuration one electrode is movable and the other is stationary. Both electrodes need not be movable. A gas discharge can be produced in the 4.32mm bore over lengths of 24 inches when one electrode is located in the bore and one in the vacuum chamber. The discharge operates

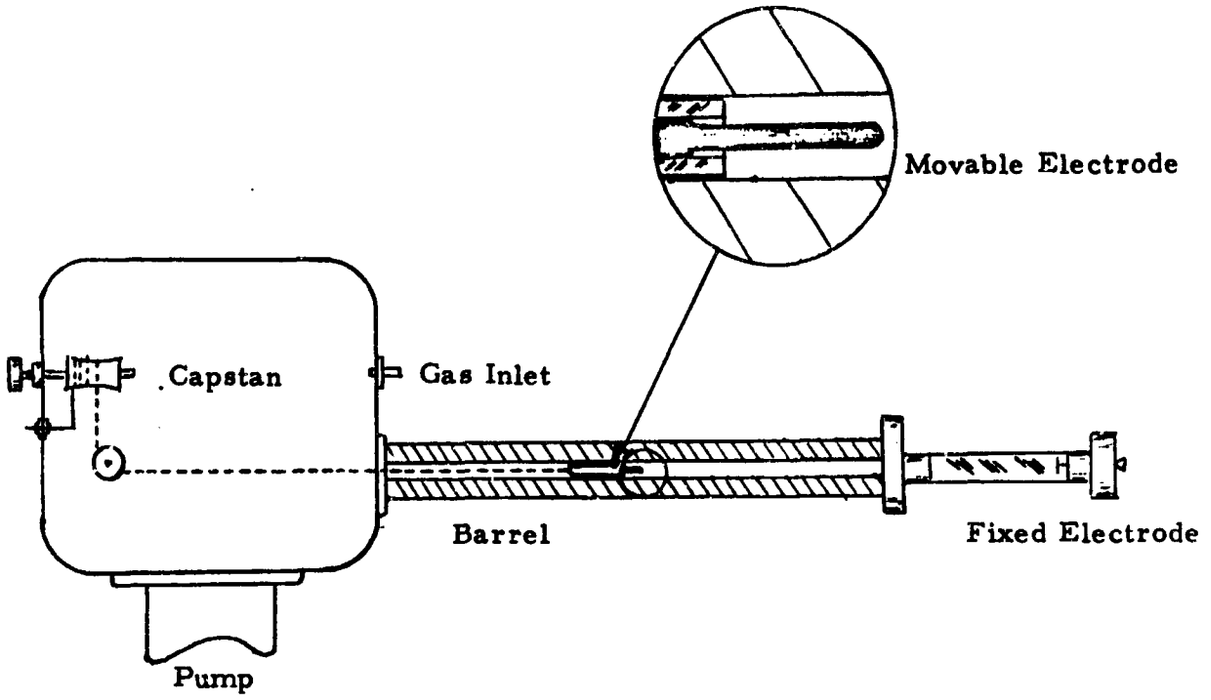

Figure 1. Movable Electrode Technique

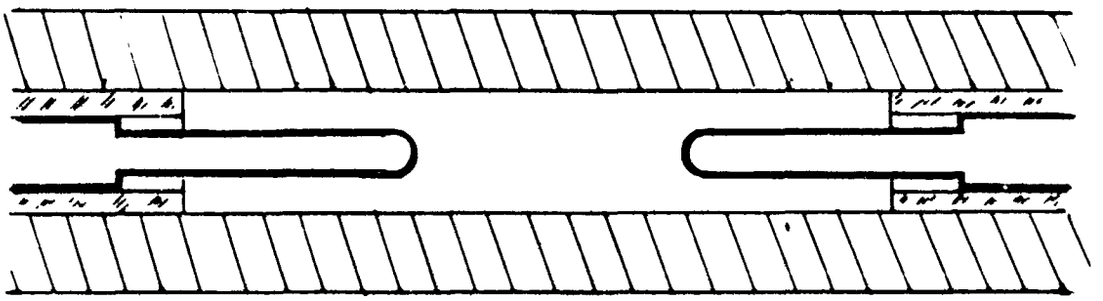

Figure 2. Two Electrodes Movable

at all distances between the entrance end of the barrel and the opposite end. The applied voltage can be either alternating current or direct current. Alternating current provides a more stable discharge and a lower starting voltage. Both electrodes are shown in the barrel in Figure 2. In this arrangement, an alternating current discharge results in sputter deposition from each electrode on alternate half cycles.

The moveable electrode technique was tried originally because it offered a way to remedy the limitations imposed by the small dimensions of the bores to be coated. Other techniques, such as a wire positioned on the barrel axis and made negative with respect to the barrel, limit the electrode gap to a maximum value of the bore radius. The electrode gap is the controlling parameter because the voltage and the gas pressure than can be used are determined by this parameter.

If a potential difference of a few hundred volts is applied between the target rod and an external electrode, a range of gas pressure will exist so that a discharge can be initiated and maintained between the two. Because one electrode is external, a degree of freedom is allowed that is not present if the discharge is confined to the target-barrel gap. The longer path provides a higher probability of ionizing collisions for each electron traversing the gap and, therefore, the technique is usable at lower pressures [α = probability of ionization by collision and $\alpha \sim \exp(-Pd/V)$ where P is the pressure, d is the gap between electrodes, and V is the potential across the gap]. The operating pressure is important because, if too high, the deposit will be black and, if too low, no deposit will occur. The first condition indicates that the deposit is of low density and results in a surface topography so that light is almost completely trapped in its voids. The second condition exists when fewer ionizing collisions occur than are necessary to sustain the gas discharge. Metallic, durable coatings result when the pressure and the applied voltage are maintained in the proper ranges. The discharge gap, in this configuration, is between two electrodes that can be arbitrarily positioned rather than restricted to the maximum separation of an axial source and the bore surface. The electrode (source), positioned on the bore axis, is made negative with reference to the external electrode, and the subsequent ion bombardment of the source will result in a sputter deposit being formed on the bore.

A more easily maintained alternating current discharge can be used. The disadvantage of AC operation is a reduced deposition rate because the source electrode is only sputtered for half of each cycle. If both electrodes are positioned in the barrel (Figure 2), the rate will not be reduced. Each electrode will act as the source during half of the cycle.

The electrode (or electrodes) is moved down the barrel during deposition to coat the entire barrel length. The coating thickness can be precisely controlled because of the reproducible sputtering-rate of target materials as a function of applied voltage and current density. The sputtering yield (number of atoms sputtered for incident ion) varies as a function of ion energy (i.e., applied voltage). The yield is unaffected by current density. The deposition rate is proportional to current density.

(2) Films Deposited

Films of chromium, tungsten, and copper were deposited onto steel and glass tubing of .17-inch and .16-inch diameter. Tungsten, copper, and chromium are shown in Figures 3, 4, and 5, respectively. The photomicrographs were taken at 1040X and 520X, and film thicknesses are approximately 0.0005 inch.

Initial deposits were made onto glass tubing to allow the discharge to be observed, and the sputter deposit detected. This approach allowed the discharge conditions to be determined. With argon as the discharge gas at a background pressure of .2 Torr, sputtering occurred at an applied AC voltage of 1200 volts and current of 15 mA.

The discharge conditions were also evaluated in a .17-inch-diameter metal tube constructed with a glass viewing window. The narrow window made viewing of the electrode possible as pressure and voltage were varied. The window space was approximately one-sixth of the tube circumference; therefore, the electric field was not significantly affected. The window was longer than the exposed electrode, and the glow discharge was viewed along several inches of the barrel length. At pressure of approximately .1 Torr, the discharge could be initiated and maintained. The indications, external to the tube, were that a discharge was present at the electrode within the bore. With the viewing window, however, the glow discharge was seen to terminate about one-half inch from the electrode, and no sputtering was seen to occur. When the pressure was

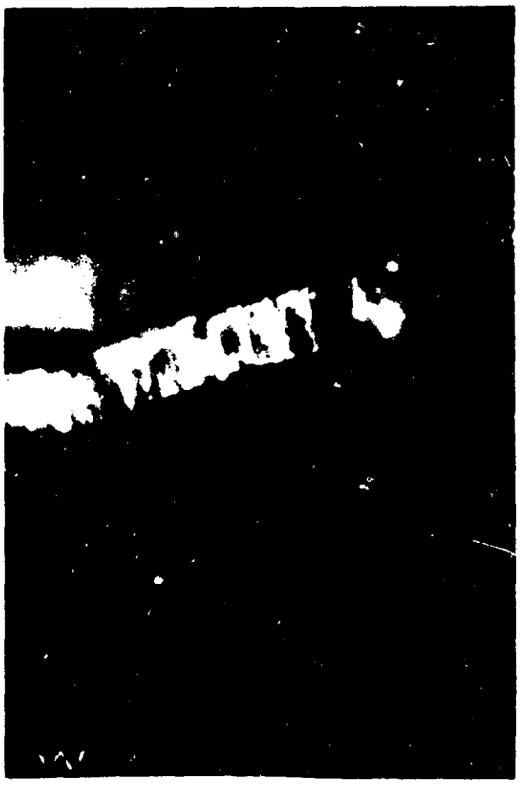

Figure 3. Sputter-deposited tungsten film, 1040X.

Figure 4. Sputter-deposited copper film, 1040X.

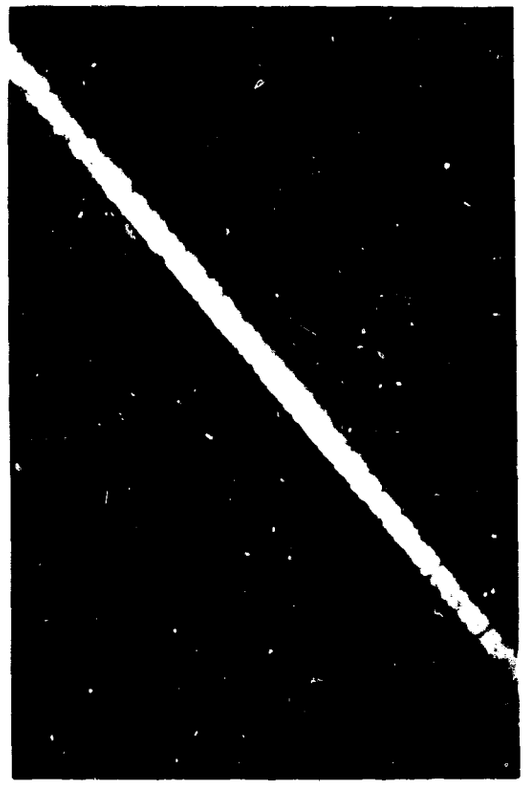

Figure 5. Sputter-deposited chromium film, 520X.

increased from .2 to .3 Torr, the discharge was present at the electrode and a sputter deposit formed on the window. By use of the glass window, a positive occurrence of sputtering was observed, and sputtering rate was indicated by the time necessary for coating to become opaque. A metal film becomes opaque at thicknesses of nearly 700 angstroms. Metallic, highly reflective films formed at lower pressures (.2 - .3 Torr) under the conditions that the glow-discharge enveloped the end of the electrode and a thin dark-region (sheath) surrounded the electrode.

The operating conditions noted above were reproduced with the electrode inserted into windowless steel tubing. Deposits were made within the tubing under these conditions as determined by the sectioning of tubing.

(3) Moveable Mechanism

A capstan arrangement was fabricated and used to move one electrode along the barrel as the deposit was continued. The capstan was driven manually and coupled through the vacuum wall with a rotary feed-through. The wire, attached to the capstan and electrode, also provided the electrical contact to the electrode. The wire was covered by ceramic beads to prevent contact to the barrel (Figure 1).

(4) Electrode Shape

The sputtering electrode was covered, except for the exposed end, with glass and ceramic tubing. The electrode was reduced in diameter where the cover glass-tubing began. This action prevented a sputter deposit from forming an electrical short from the electrode, across the glass tubing, to the bore surface. The copper electrodes were made from .125-inch-diameter copper tubing. The glow discharge terminated at a bright glow in the end of the copper tubing and resembled a hollow cathode discharge. The deposition rate was highest for this configuration.

(5) External Circuit

The external circuit values, including the power supply used, have a direct effect on the current drawn at the target electrode. The material deposited varies directly as the target current. The voltage between electrodes is determined by the gas pressure and the electrode geometry, and (to a lesser extent) by the electrode materials. Under normal conditions, once the gas discharge

has formed and is self-maintained, the voltage between electrodes will remain nearly constant over a wide range of current. The amount of current drawn under these conditions is determined by the external circuit and the power supply impedance. The maximum deposit rate will occur if a power supply, capable of delivering more than 1000 volts at an output impedance of a few hundred ohms, is used. Exact values depend upon the ion density achieved for a particular electrode geometry. Higher deposition rates could have been achieved with the use of this technique if power supplies of the proper output impedance had been available.

B. Other Techniques

(1) Plasma Sputtering

In plasma sputtering, a wire was positioned on the center axis of the gun bore. The barrel was evacuated, and backfilled with argon. During the test, the argon pressure was varied between 0.01 and 0.5 Torr, while several hundred volts were applied between the wire and the gun barrel. Although the pressure and the voltage were varied over the wide range, current flow was not evident between wire and barrel, which would demonstrate that a discharge had started. A Tesla coil was positioned near the wire in an attempt, without success, to initiate the discharge. Higher voltage caused a discharge to initiate between one end of the wire and the system baseplate. This problem remained in other attempts, even though various shielding techniques were used. The affinity for the discharge to occur from the wire to the surfaces other than the gun bore can be explained by a consideration of the Paschen curve for minimum spark breakdown. The pressure limitation for the production of smooth metallic films requires that the pressure be less than 0.5 Torr. The region of the curve for minimum spark breakdown extends from Pd products of approximately 1 to 10 mm Torr. If the P is equal to 0.5 Torr, the conditions favor a discharge occurring at gaps greater than the bore radius. At lower pressure, even longer paths are favored. This is illustrated by the curves in Figure 6. The 2mm spacing represents the gap available if the potential is applied between wire and barrel. The 150 mm spacing represents a typical gap between the wire or barrel and the chamber baseplate or other fixtures. A discharge will start more easily over lengths greater than the electrode gap if the pressure is below 0.25 Torr (250μ), approximately. The actual values of pressure and voltage for the production of a discharge, under experimental conditions, should not be expected to conform exactly to the values on the curves. Surface irregularities such as a sharp point can significantly alter the sparking potential.

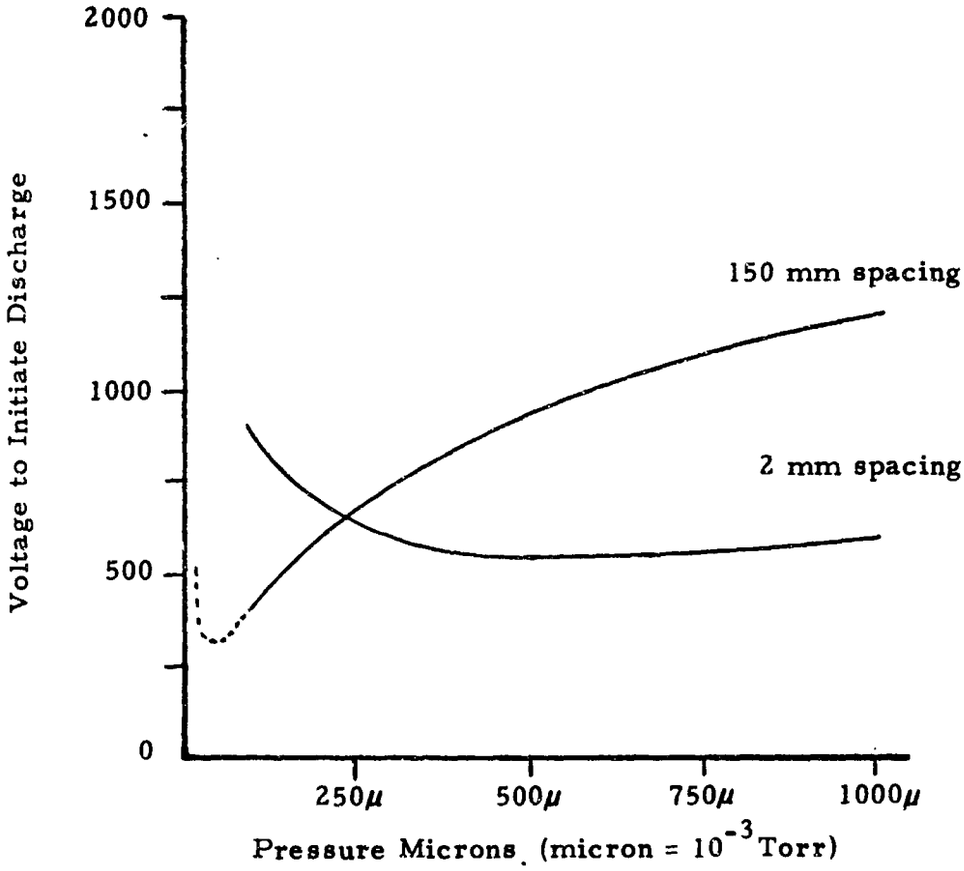

Figure 6. Voltage to Initiate Discharge vs. Chamber Pressure for Two Electrode Spacings.

(2) Capillary and Arc Discharge

The capillary and the arc discharge offered the possibility that a high density plasma could be formed through the length of the barrel. Furthermore, the belief was that a wire placed on the barrel axis and biased negative with respect to the plasma would draw sufficient ion current to sputter a coating on the bore surface. The arrangement and circuitry used are illustrated in Figure 7.

The major mechanical problem associated with this technique was that of the alignment of the wire on the barrel axis. This alignment was accomplished by the construction of rigid, but adjustable, supports at each end of the barrel. The wire was maintained straight by tension.

Two characteristics of this technique prevented a deposit from being made. (1) Electrically isolating feedthroughs and leads was impossible to sufficiently prevent a glow discharge external to the barrel. (2) Increasing the cathode to anode voltage resulted in an arc discharge terminating a few inches within the barrel. The arc occurred between the anode and the wire. The arc discharge, characterized by high current and low voltage between the wire and barrel, caused severe heating of the barrel.

(3) Reactive Sputtering and Multicomponent Materials

Reactive sputtering consists, in this application, of sputtering with a reactive gas such as oxygen rather than inert gas, i.e., argon. The sputtering technique used can be any of those techniques discussed in this report that will result in a deposited film. Reactive sputtering is an attractive method for production of coatings of nitrides, carbides, oxides, and sulfides. No significant change is present in the physical system necessary for reactive sputtering. An effect occurs on the sputtering rate if a reactive gas is used because of the chemical combination at the target surface and because of the formation of an oxide of reduced sputtering rate. Reactive sputtering is a logical extension of the sputtering-deposition approach and should be pursued if a material selection program indicates that metal oxides or other compounds are suitable.

Multicomponent materials can be sputtered using the MET configuration. The governing factors are those of the choice of material as determined by the properties desired and the availability of material in rod form. Several materials such as carbides are available in diameters as small as 0.05 inch that would be suitable for sputtering.

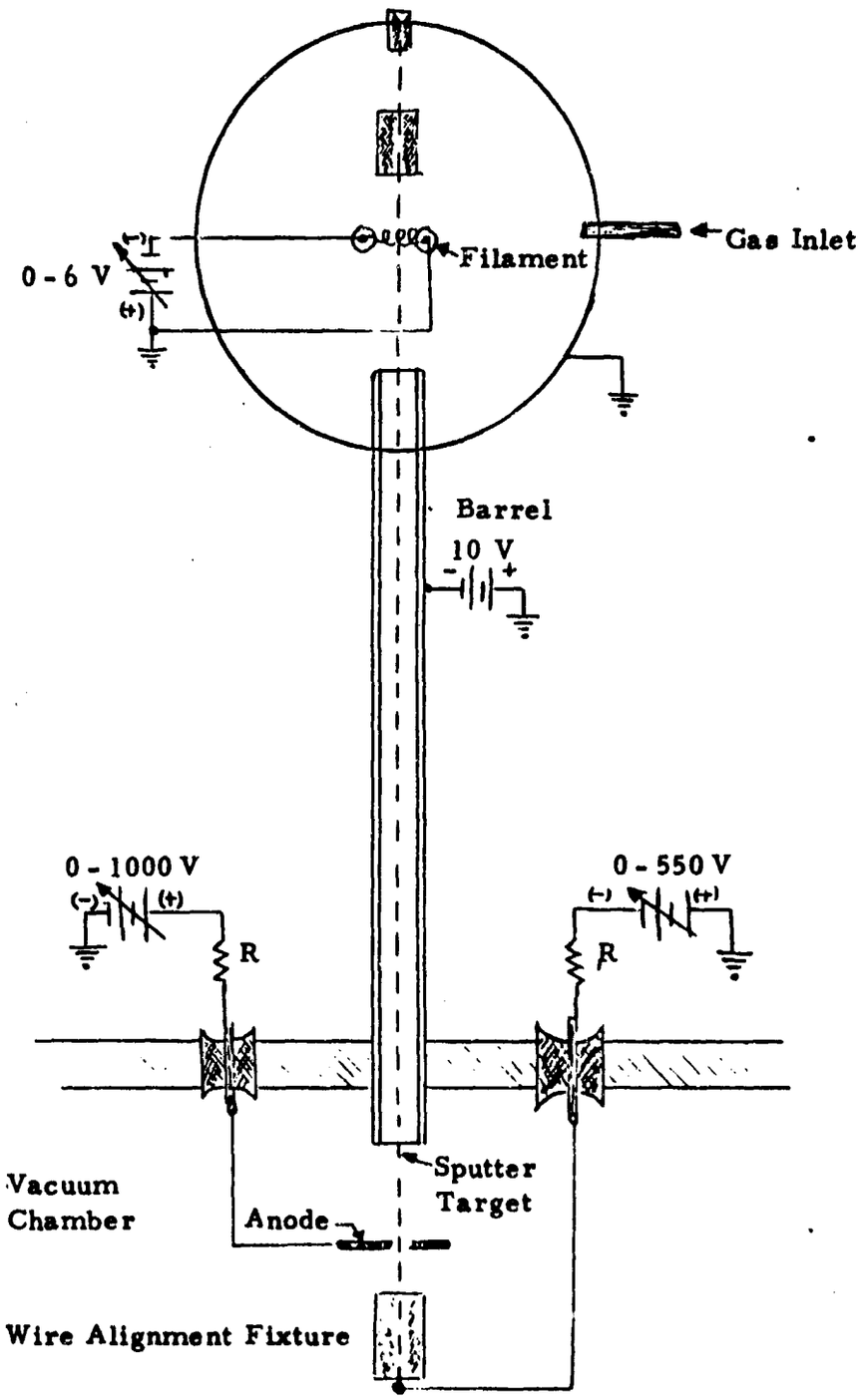

CAPILLARY DISCHARGE EXPERIMENT

Figure 7

(4) Assisted (Triode) Sputtering

This technique involves a wire (on the barrel axis) used as the negative electrode and the barrel used as the anode. In addition, a heated filament was used as an electron source, and electrons were accelerated to one end of the barrel. The injection of electrons into the barrel should provide increased ionization and initiation of a discharge at lower applied voltage.

This approach did not produce a discharge when used with a wire on the barrel axis; however, it did increase the sputtering current when used with the MET. In the MET configuration with one electrode external and alternating current applied to the electrodes, the current was increased by production of a discharge in the connecting chamber. An RF power supply, self-excited at approximately 20 MHz, was used to partially ionize argon gas in a chamber at one end of the barrel. With 1500 V (60 Hz) applied between an electrode in the barrel and an electrode in the chamber, the sputtering current to the barrel electrode was increased by 10 per cent

(5) Ion Beam

The ion beam approach involves, basically, three regions: a region for production of a plasma-ionized gas; a second region, the target electrode; and a third region, the bore surface. Ions produced in region one are extracted through an aperture negative with respect to the plasma column Beam-shaping electrodes can also be used to focus and collimate the beam. The ion beam and the gun barrel would be aligned to insure that the beam could travel the barrel length with minimum losses to the walls. A target electrode (the material to be deposited) would be positioned in the barrel and moved at a rate determined by the deposition rate and the thickness desired.

In the analysis of this technique the first consideration was that of the beam density that could be achieved. The current that can be extracted through an aperture depends directly on the current density in the ionized region near the aperture For a dense plasma, the ions are shielded from the potential applied to the aperture, and their mobility will not be affected by the field. Ions that drift to the sheath that forms a negatively biased aperture plate will encounter a force because of the field and will be accelerated through the opening The flux of ions drifting to

the sheath edge can be shown to be j (amps/cm^2) = $\frac{nV}{4}$, n(ion/cm^3), V the average velocity. Under the assumption that a well-designed ion source and vacuum-chamber combination will allow a large pressure differential between the ion source and the chamber in which the barrel is located, the belief is that the ion source pressure would not be greater than 1×10^{-3} Torr. This would provide a background of approximately 3×10^{13} atom/cm^3. Ionization of the background atoms would be approximately 2 per cent and yield an ion concentration of 6×10^{11} ion/cm^3. The ion flux to an extraction grid would be j (ion/cm^2 sec) = $\frac{n\bar{V}}{4}$ = 3×10^{16} ion/cm^{2}sec. The entrance to the bore is approximately 0.13 cm^2 and the resulting beam current would be nearly 4×10^{15} ion/sec. If the material used as a target electrode had a sputtering yield of 2 atom/ion, the ejected atoms would equal 8×10^{15} atom/sec. For a deposit area of 1 cm^2, the thickness would increase by approximately 8 Å (8×10^{-8} cm) per sec. This rate would represent an impractical buildup of material.

While the estimate presented here is based on a simple model of very complex processes and does not include effects such as the decrease in delivered current due to space charge, this estimate does agree with values of ion current achieved under laboratory conditions.

CONCLUSIONS AND RECOMMENDATIONS

Of the sputtering techniques considered during this program, one (MET) produced films in 4.32mm tubing. Of the films produced, copper gave the highest rate of deposition followed by chromium, then tungsten. The deposition rates varied as the sputtering rate of the material.

The time required to deposit a film (0.001 inch thick) the length of a 24-inch barrel has been estimated from results obtained in this study. In addition, the deposition time required with the use of more suitable power supplies and also the use of xenon gas is given in Table I. The times are given per barrel and for single electrode operation. The time can be reduced by one-half when the double electrode configuration is used. Furthermore, the process is ideally suited to multiple-barrel deposits. One vacuum chamber with a single gas pressure control and power supply can accommodate a number of barrels simultaneously. The yield of coated barrels is obviously increased by this approach. A vacuum chamber of 30-inch diameter could readily accommodate 100 barrels per run.

TABLE I

Metal	T_o	T_p	T_{pg}
Cu	11.5	4	4.4
W	52	17	8.5
Cr	23	7.5	5.4

T_o -- Time (hrs) to deposit a coating (0.001-inch thick) in a 24-inch barrel.

T_p -- Time (hrs) required if voltage and current is optimized.

T_{pg} -- Time (hrs) required if the gas used is selected to optimize sputtering of tungsten.

One difficulty encountered in this study was that of gas-pressure control. The gas pressure is critical, as described previously, and should be maintained within ± .05 Torr or less. Control systems are commercially available by which gas pressure can be measured; and with a servo-controlled leak valve, the pressure at a predetermined value well within the tolerances required for this application can be maintained.

The MET is a straightforward method for deposition of films inside cylinders. The controls and the power supplies for optimum operation are available commercially. With gas pressure control, the results are reproducible.

Other approaches considered were more complex and incorporated additional variables. MET, because it is physically and electrically less complex, allows electrode designs that are not limited by the gap breakdown characteristic; and all electrodes can be isolated to prevent undesirable discharges to chamber walls, the baseplate, or to other components.

Additional effort should be expended to demonstrate optimum rates and materials. A technique has been defined and tested. A prototype system remains to be constructed based on the information gained, and the properties of films deposited by this method remain to be investigated. The choice of material also indicates, to some extent, the choice of gas used for sputtering. Sufficient information is available to make such choices.