AIR FORCE REPORT NO.
SAMSO-TR-72-8

AEROSPACE REPORT
TR-0172(2250-10)-5

AD736445

Texture Strengthening of Spin-Forged Ti-6Al-4V Alloy

Prepared by M. F. AMATEAU
Materials Sciences Laboratory

72 JAN 15

Laboratory Operations
THE AEROSPACE CORPORATION

Prepared for SPACE AND MISSILE SYSTEMS ORGANIZATION
AIR FORCE SYSTEMS COMMAND
LOS ANGELES AIR FORCE STATION
Los Angeles, California

APPROVED FOR PUBLIC RELEASE:
DISTRIBUTION UNLIMITED

Reproduced by
NATIONAL TECHNICAL
INFORMATION SERVICE
Springfield, Va 22151

D D C
FEB 7 1972
D

26

Air Force Report No.
SAMSO-TR-72-8

Aerospace Report No.
TR-0172(2250-10)-5

TEXTURE STRENGTHENING OF SPIN-FORGED Ti-6Al-4V ALLOY

Prepared by

M. F. Amateau
Materials Sciences Laboratory

72 JAN 15

Laboratory Operations
THE AEROSPACE CORPORATION

Prepared for

SPACE AND MISSILE SYSTEMS ORGANIZATION
AIR FORCE SYSTEMS COMMAND
LOS ANGELES AIR FORCE STATION
Los Angeles, California

Approved for public release;
distribution unlimited

D D C
RECEIVED
FEB 7 1972
D

CFSTI WHITE SECTION
DDC BUFF SECTION
UNANN. CED.
JUSTIFICATION
BY
DISTRIBUTION/AVAILABILITY CODES
DIST. AVAIL. and/or SPECIAL
A

LABORATORY OPERATIONS

The Laboratory Operations of The Aerospace Corporation is conducting experimental and theoretical investigations necessary for the evaluation and application of scientific advances to new military concepts and systems. Versatility and flexibility have been developed to a high degree by the laboratory personnel in dealing with the many problems encountered in the nation's rapidly developing space and missile systems. Expertise in the latest scientific developments is vital to the accomplishment of tasks related to these problems. The laboratories that contribute to this research are:

Aerodynamics and Propulsion Research Laboratory: Launch and reentry aerodynamics, heat transfer, reentry physics, propulsion, high-temperature chemistry and chemical kinetics, structural mechanics, flight dynamics, atmospheric pollution, and high-power gas lasers.

Electronics Research Laboratory: Generation, transmission, detection, and processing of electromagnetic radiation in the terrestrial and space environments, with emphasis on the millimeter-wave, infrared, and visible portions of the spectrum; design and fabrication of antennas, complex optical systems, and photolithographic solid-state devices; test and development of practical superconducting detectors and laser devices and technology, including high-power lasers, atmospheric pollution, and biomedical problems.

Materials Sciences Laboratory: Development of new materials; metal matrix composites and new forms of carbon; test and evaluation of graphite and ceramics in reentry; spacecraft materials and components in radiation and high-vacuum environments; application of fracture mechanics to stress corrosion and fatigue-induced fractures in structural metals; effect of nature of material surfaces on lubrication, photosensitization, and catalytic reactions; and development of prothesis devices.

Plasma Research Laboratory: Reentry physics and nuclear weapons effects; the interaction of antennas with reentry plasma sheaths; experimentation with thermonuclear plasmas; the generation and propagation of plasma waves in the magnetosphere; chemical reactions of vibrationally excited species in rocket plumes; and high-precision laser ranging.

Space Physics Laboratory: Aeronomy; density and composition of the atmosphere at all altitudes; atmospheric reactions and atmospheric optics; pollution of the environment; the sun, earth's resources; meteorological measurements; radiation belts and cosmic rays; and the effects of nuclear explosions, magnetic storms, and solar radiation on the atmosphere.

THE AEROSPACE CORPORATION
El Segundo, California

FOREWORD

This report is published by The Aerospace Corporation, El Segundo, California, under Air Force Contract No. F04701-71-C-0172.

This report, which documents research carried out from September 1969 to January 1970, was submitted on 12 November 1971 to Captain Jerry J. Smith, SYAE, for review and approval.

Approved

W. C. Riley, Director
Materials Sciences Laboratory

Publication of this report does not constitute Air Force approval of the report's findings or conclusions. It is published only for the exchange and stimulation of ideas.

Jerry J. Smith
Captain, United States Air Force
Project Officer

ABSTRACT

Ti-6Al-4V plates were spin-forged into hemispheres so that the effect of the spinning process on plastic strain anisotropy could be examined. Spinning temperatures were varied from 400 to 1725°F, and plastic strains in the longitudinal and transverse directions were measured. The plastic strain anisotropy and texture developed by spin-forging were similar to those produced by other forms of processing and resulted in texture strengthening at low spinning temperatures.

UNCLASSIFIED
Security Classification

DOCUMENT CONTROL DATA - R & D

(Security classification of title, body of abstract and indexing annotation must be entered when the overall report is classified)

1. ORIGINATING ACTIVITY *(Corporate author)* The Aerospace Corporation El Segundo, California	2a. REPORT SECURITY CLASSIFICATION Unclassified 2b. GROUP

3. REPORT TITLE

TEXTURE STRENGTHENING OF SPIN-FORGED Ti-6Al-4V ALLOY

4. DESCRIPTIVE NOTES *(Type of report and inclusive dates)*

5. AUTHOR(S) *(First name, middle initial, last name)*

Maurice F. Amateau

6. REPORT DATE 72 JAN 15	7a. TOTAL NO. OF PAGES 22	7b. NO. OF REFS 7
8a. CONTRACT OR GRANT NO. F04701-71-C-0172 b. PROJECT NO. c d	9a. ORIGINATOR'S REPORT NUMBER(S) TR-0172(2250-10)-5 9b. OTHER REPORT NO(S) *(Any other numbers that may be assigned this report)* SAMSO-TR-72-8	

10. DISTRIBUTION STATEMENT

Approved for public release; distribution unlimited

11. SUPPLEMENTARY NOTES	12. SPONSORING MILITARY ACTIVITY Space and Missile Systems Organization Air Force Systems Command United States Air Force

13. ABSTRACT

Ti-6Al-4V plates were spin-forged into hemispheres so that the effect of the spinning process on plastic strain anisotropy could be examined. Spinning temperatures were varied from 400 to 1725°F, and plastic strains in the longitudinal and transverse directions were measured. The plastic strain anisotropy and texture developed by spin-forging were similar to those produced by other forms of processing and resulted in texture strengthening at low spinning temperatures.

DD FORM (FACSIMILE) 1473

UNCLASSIFIED
Security Classification

UNCLASSIFIED

Security Classification

14

KEY WORDS

Anisotropy
Spin-Forging
Texture Strengthening
Ti-6Al-4V

Distribution Statement (Continued)

Abstract (Continued)

UNCLASSIFIED

Security Classification

CONTENTS

FOREWORD ii

ABSTRACT iii

I. INTRODUCTION 1

II. EXPERIMENTAL PROCEDURE 5

III. THEORETICAL BACKGROUND. 9

IV. RESULTS 11

V. DISCUSSION 13

VI. CONCLUSIONS 17

REFERENCES 19

TABLES

1. Theoretical Biaxial Strengthening due to Plastic Strain Anisotropy 8

2. Summary of Results 12

FIGURES

1. Two Spin-Forming Methods for Production of Hemispheres 2

2. Schematic Diagram Showing the Parameters of Spin-Forging 3

3. Orientation and Position of Tensile and Pole Figure Specimens Taken from Spun Domes 6

4. Plastic Strain Ratio vs Temperature for Various Processing Treatments 10

5. Typical Basal Pole Figures Resulting from Processes that Produce High Strain-Ratio Values 14

6. Typical Basal Pole Figures Resulting from Processes that Produce Low Strain-Ratio Values 14

I. INTRODUCTION

Biaxial strengthening can be achieved in hexagonal close-packed metals when texturing minimizes the through-thickness strain (Refs. 1-3). This strengthening can be used in pressure vessel applications, in which biaxial stress conditions obtain (Ref. 4). Techniques for producing textured pressure vessels in the alpha-beta titanium alloy Ti-6Al-4V have been developed that involve first rolling into sheet and then drawing into hemispheres or welding into cylindrical tanks (Ref. 5). Previous studies on the effect of forming processes on plastic strain anisotropy indicated that spin forming may produce texturing in a hemisphere without further processing (Ref. 6).

There are a number of different types of spinning operations, including conventional spinning (sometimes called shear spinning), extrusion spinning, draw spinning, and spin forging. Of these, two are suitable for production of domes that can be used for fabrication of spherical pressure vessels. These are conventional spinning and spin forging, which are illustrated in Figure 1. In conventional spinning, shown on the left in Figure 1, each element in the blank undergoes appreciable radial displacement with little change in thickness. This is essentially a process of laying the sheet back over the mandrel. In spin forging, shown on the right in Figure 1, each element is reduced in thickness with a simultaneous elongation in the axial position. There is relatively little change in the radial position. This is essentially a squeezing process. The deformations in spin forging are shown in Figure 2. The deformation takes place by shear in a direction parallel to the spinning axis. If the mandrel were conical with a half angle α, the final thickness of the piece would be given as

$$t_f = t_o \sin \alpha$$

where t_o is the original thickness. However, for a hemispherical mandrel, the spinning angle α varies with the distance along the spinning axis and is

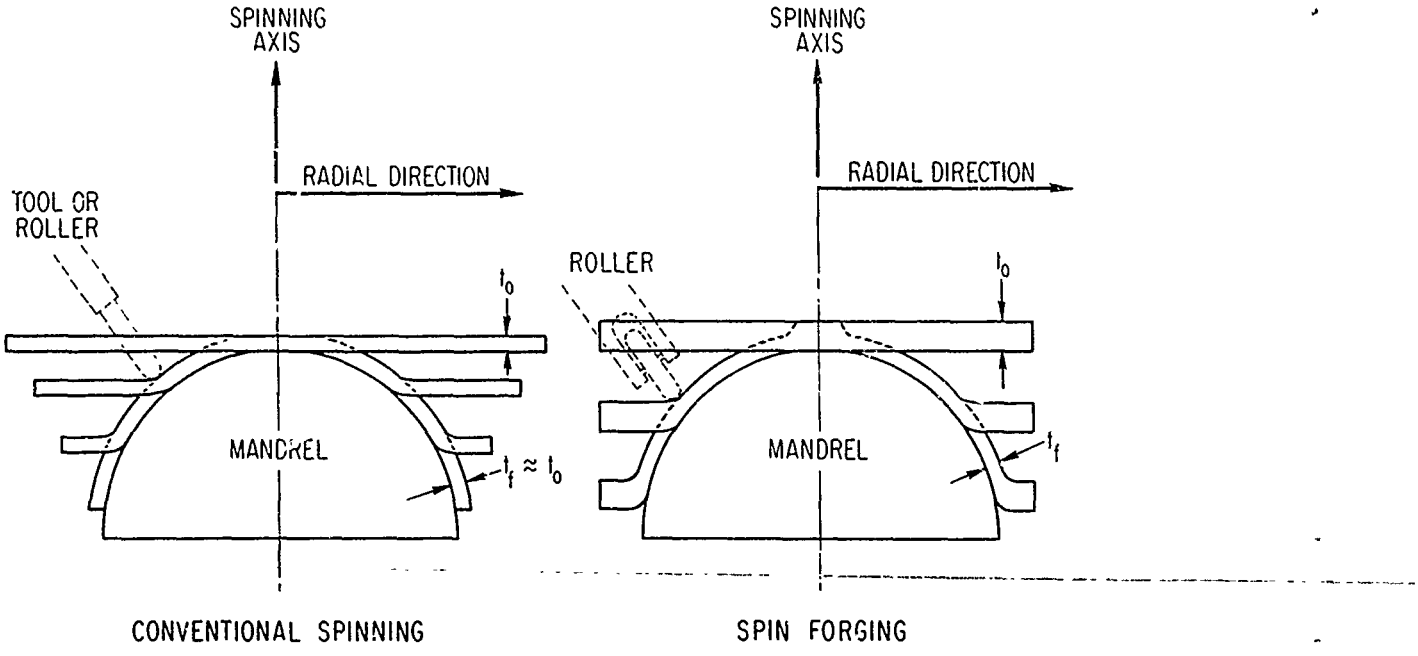

Figure 1. Two Spin-Forming Methods for Production of Hemispheres

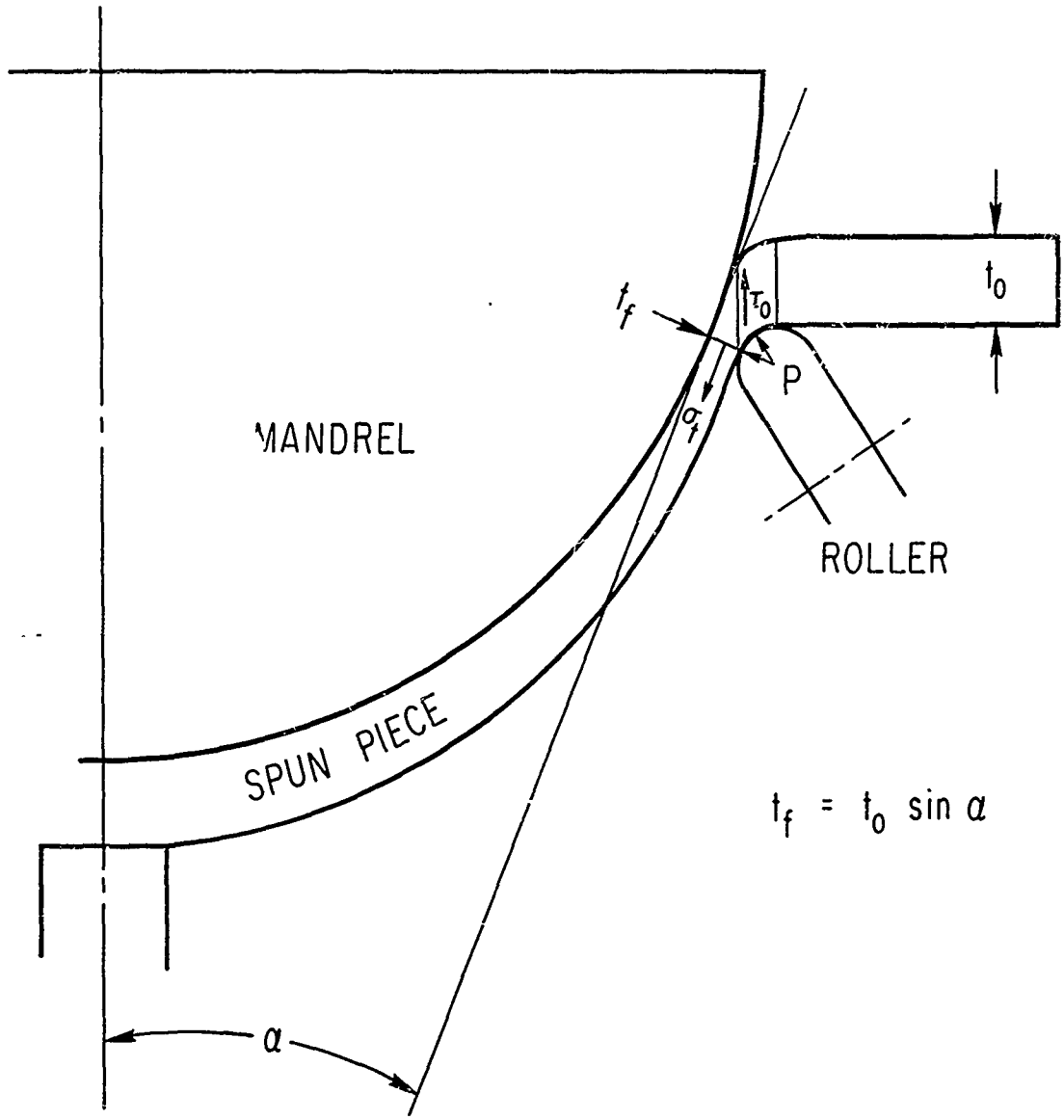

Figure 2: Schematic Diagram Showing the Parameters of Spin Forging

given by the angle between the spinning axis and the tangent to dome. This creates three problems: (1) the thickness of the spun piece varies along the axial direction, (2) there is too little deformation near the pole of the dome, and (3) there is too much deformation at the equator; in fact, as the spinning angle approaches zero, the shear strains approach infinity.

These problems can probably be overcome by (1) a combination of internal and external spin forging, (2) intentional underspinning, or (3) conventional spinning of preformed spin-forged cones.

This study examined the effect of the spinning process on plastic strain anisotropy to determine whether texture strengthening would result.

II. EXPERIMENTAL PROCEDURE

The spin-forging for this program was done by Trimetals Corp. of Santa Fe Springs, California. Blanks 8 in. in diameter, of 150-in.-thick, mill-annealed Ti-6Al-4V, were spin-forged into 6-1/2-in.-diam hemispheres at various temperatures from 1725 to 400°F. The temperatures were measured with a contact pyrometer both before and after spinning. The final thickness of the blanks near the bottoms of the hemispheres ranged from 0.045 to 0.085 in. The spinning was carried out until the shear strains for fracture were exceeded.

The test specimens were taken from near the bottoms of the domes, so that material processed to its limit of spinnability was examined.

Figure 3 shows the direction of the specimen with respect to the spun dome. The tensile axis is in the circumferential direction. Pole figure specimens 2 in. in diameter were also taken from near the bottom of the dome. The techniques used for pole figure determination have been described previously (Ref. 7). Because of the difficulty in working with curved specimens, sections were cut from the dome and preflattened in a hydraulic press after they were heated to 1300°F. This technique was chosen because work at Lockheed (Ref. 5) indicated that no serious reduction in plastic strain anisotropy would result from this treatment.

After flattening, the specimens were spark-discharge-machined to a length of 2-1/2 in. and to a gage section 1-1/4 in. long by 1/3 in. wide. The specimens were then ground to a gage thickness of about 0.040 in.

Plastic strain anisotropy was measured by use of stacked rossette strain gages in the longitudinal and transverse directions. The strains were measured to 3 percent; the thickness strains were calculated from the measured strains with the assumption of constant volume in the plastic range. The very small final thickness of the tensile specimens made the use of thickness gages quite impractical in this case. In previous studies with Ti-6Al-4V, the constant-volume approximation was compared

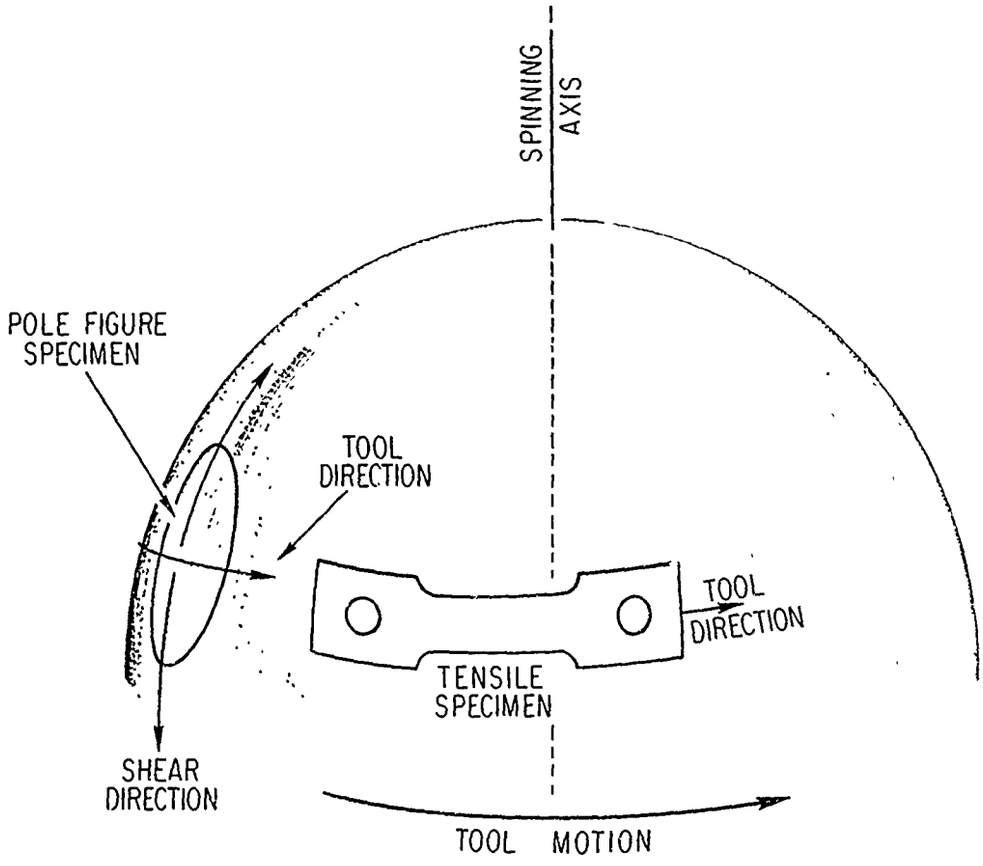

Figure 3. Orientation and Position of Tensile and Pole Figure Specimens Taken from Spun Domes

to strains measured in the through-thickness direction and found to be valid (Ref. 6). The strains from the rossette were recorded on an X-Y recorder, and a stress-strain diagram was also plotted with a strain-gage extensometer.

Table 1. Theoretical Biaxial Strengthening due to Plastic Strain Anisotropy

R	$\frac{\text{BIAXIAL YIELD STRENGTH}}{\text{UNIAXIAL YIELD STRENGTH}}$
0.5	0.93
1.0	1.00
2.0	1.22
3.0	1.41
4.0	1.58
5.0	1.73
9.0	2.24

III. THEORETICAL BACKGROUND

Plastic-strain anisotropy is expressed in terms of the strain ratio R, defined as the ratio of the increment in plastic strain in the width direction to the increment in plastic strain in the thickness direction when a uniaxial tension is applied in the longitudinal direction. Biaxial strengthening can be calculated from the plastic strain anisotropy by use of Hill's theory:

$$\sigma_1 = \sigma_2 = \sqrt{\frac{X}{2 - 2R/(R + 1)}}$$

where σ_1 and σ_2 are the principal stresses, R is the strain ratio, and X is the uniaxial tensile yield strength.

Table 1 presents the theoretical biaxial strengthening, expressed in terms of the ratio of biaxial to uniaxial yield strength, due to plastic strain anisotropy with the assumption of isotropy in the plane of the sheet. For $R < 1$, the biaxial yield is approximately nine-tenths of the uniaxial yield strength. For isotropy, $R = 1$, the ratio of biaxial to uniaxial yield is one. Values of R greater than one result in biaxial strengthening. For instance, at $R = 9$, the biaxial yield strength is 2-1/4 times the uniaxial yield strength.

A previous study of the effect of processing on texture strengthening of Ti-6Al-4V, Figure 4, reveals that the R value depends on the forming temperature (Ref. 6). The high rolling temperatures result in $R < 1$, indicating biaxial softening. Some biaxial strengthening occurs from 1400°F rolling, while cold rolling produces considerable texture strengthening. Cross cold rolling results in exceptionally high R values.

The important conclusions of the previous study were (1) temperature of forming influences the plastic strain anisotropy, with greater R values occurring at the lower forming temperatures and (2) the type of processing also influences plastic strain anisotropy; for instance, cross rolling is more effective than unidirectional rolling.

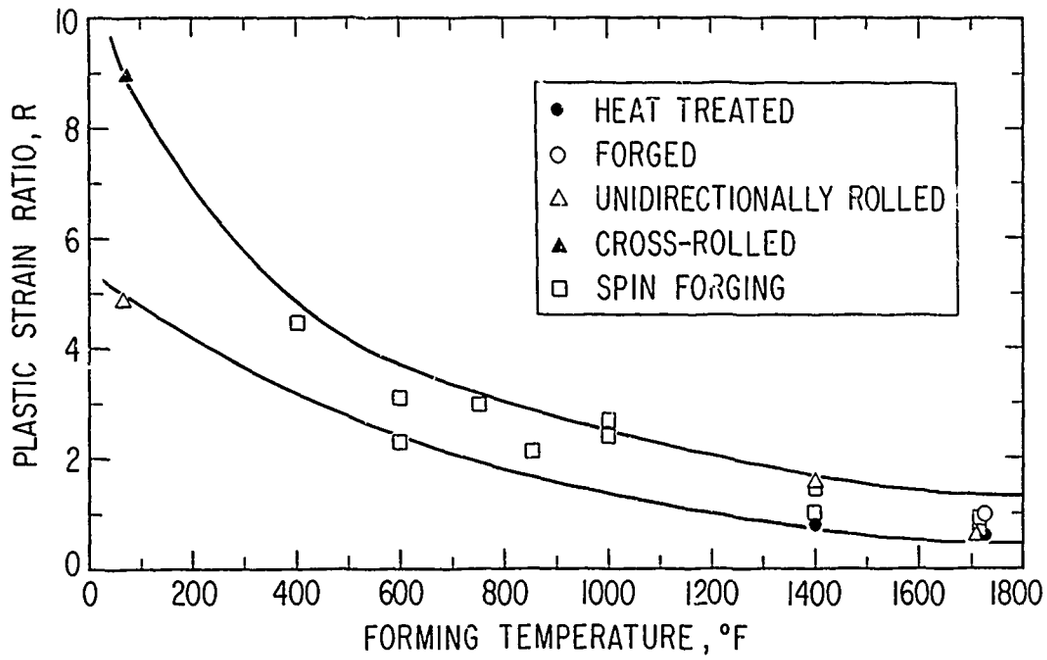

Figure 4. Plastic Strain Ratio vs Temperature for Various Processing Treatments

IV. RESULTS

Table 2 summarizes the results of the spinning experiments performed over the range of temperatures from 400 to 1725°F. The final thickness is the minimum thickness that occurred near the maximum spinning angle at the base of the dome. As the spinning temperature decreases, the maximum spinning angle increases. The spinning angle is reflected in the final thickness; however, these values are about 150 to 200 percent greater than the final thickness calculated from the sine law. This underspinning is due to elastic recovery.

The R ratio increases with decreasing spinning temperature. At 1725°F, $R < 1.0$, indicating texture softening. At 1400°F, the R is slightly greater than 1.0, indicating some texture strengthening. Strong texture strengthening occurs at spinning temperatures of 1000°F and below, but especially at 400°F. Because the maximum spinning angle at 400°F is very large, there were no attempts to spin-forge at lower temperatures.

The R values are an average of two specimens from along the circumference of the dome, except for the domes spun at 850, 750, and 400°F, for each of which only one specimen was obtained. The scatter between specimens from the same dome was generally small, except for one of the domes spun at 1000°F. The absolute scatter in R for the first three domes spun between 1725 and 1000°F does not exceed ±0.2. Scatter from the specimens of the fourth dome was ± 0.7.

The values of R from two domes spun at the same nominal temperature can be different. For the case of the 1000°F spinning, the scatter between domes falls within the scatter for the specimens from each dome. For the 600°F spinning, the difference in R values between domes is large, while the scatter for each specimen from the same dome is very small. This discrepancy is probably due to the fact that the nominal temperatures can vary by plus or minus fifty degrees from the true spinning temperature, especially at low

temperatures, since the spinning temperatures were measured only at the beginning and the end of the spinning pass.

Table 2. Summary of Results

TEMP, °F	FINAL THICKNESS t_0, in.	R	MAX SPINNING ANGLE α, deg
1725	0.051	0.7	3
1400	0.046	1.3	3
1000	0.050	2.5	12
1000	0.055	2.9	14
850	0.056	2.1	15
750	0.049	3.0	12
600	0.046	2.3	12
600	0.059	3.1	17
400	0.085	4.5	23

V. DISCUSSION

Figure 4 compares the R values from spin-forging to those from other types of processing. The trend for all forming processes is clear; the R values increase with decreasing forming temperature. At spinning temperatures of 1000°F and less, the plotted points are the average of the two specimens from each dome. At 1400 and 1725°F, the R values from each specimen are plotted. The figure presents the total scatter for all specimens tested, except for those from the 1000°F dome.

There are insufficient data to conclusively indicate whether processing does indeed influence plastic strain anisotropy, at least above room temperature. For instance, at 1725°F, the absolute scatter in R for each process (forging, rolling, and spinning) was ± 0.1, which suggests that the effect is relatively small. The solid curves in Figure 4 bracket the range of R values for all processes, but, at room temperature, the spread is actually due to real differences in R resulting from processing differences between unidirectional and cross rolling. The absolute scatter for the cross-rolled material is ± 0.1; for the unidirectionally rolled it is ± 0.6. Moreover, there are distinct textural differences that suggest that the cross-rolled material should have a higher R value than unidirectionally rolled material.

The degree of plastic strain anisotropy can be qualitatively predicted from the basal pole figures for the various forming processes. The ideal texturing would consist of all basal poles in the sheet direction so that there are no $\langle 11\bar{2}0 \rangle$ slip vectors through the plane of the sheet.

Figure 5 presents the (0001) basal pole figures for three processing cases with high R values: cross-rolled at room temperature, unidirectionally rolled at room temperature, and spin-forged at 400°F.

In cross-rolled material, there is a strong basal pole concentration near the sheet normal, while in the unidirectionally rolled material, there is a strong concentration of basal poles in the transverse direction as well as in the

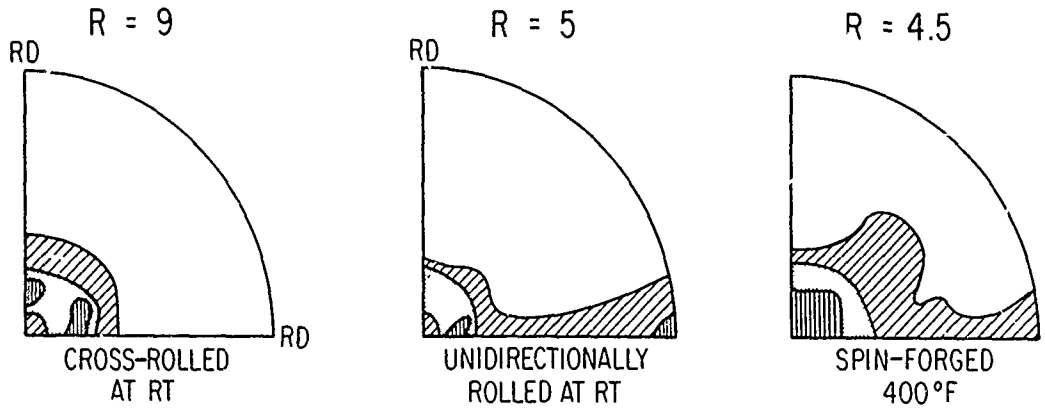

Figure 5. Typical Basal Pole Figures Resulting from Processes that Produce High Strain-Ratio Values

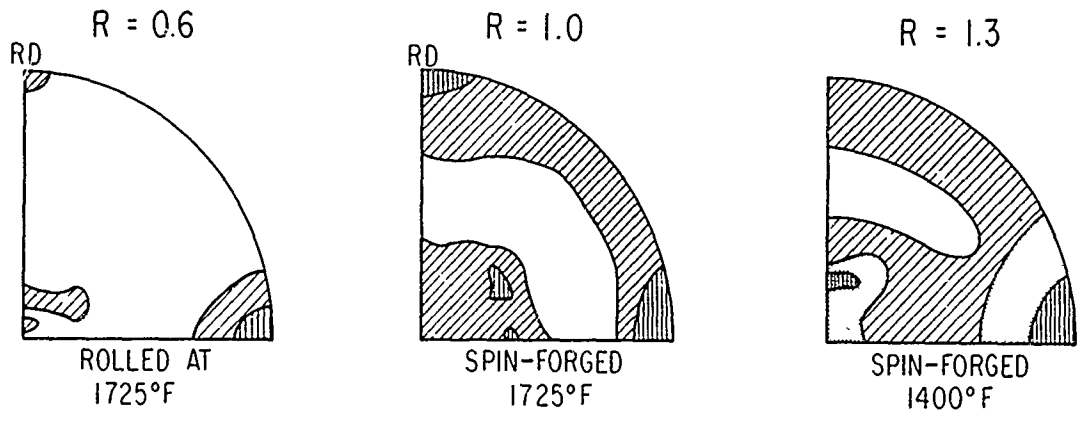

Figure 6. Typical Basal Pole Figures Resulting from Processes that Produce Low Strain-Ratio Values

sheet normal direction. This accounts for the lower R values in the unidirectionally rolled material. Spin-forging at 400°F results in a distribution of basal poles and an R value similar to that for room temperature, unidirectionally rolled material.

Figure 6 shows the basal pole figures from material that exhibited low R values. For the case of 1725°F rolled material with $R < 1$, strong concentrations of basal poles occurred in the principal directions. For the material forged at 1725°F or spin-forged at 1400°F, the distribution of basal poles is more general. For these cases, R is equal to or a little greater than one.

VI. CONCLUSIONS

1. Plastic strain anisotropy, which should produce texture strengthening, can be induced in Ti-6Al-4V by spin forging.
2. The plastic strain anisotropy resulting from spin forging is similar to that resulting from other forms of processing.
3. R values increase with decreasing spinning temperatures.
4. Basal pole figures qualitatively predict the degree of plastic strain anisotropy for all forming processes.

Preceding page blank

REFERENCES

1. A. J. Hatch, Trans. AIME 233, 44 (1965).
2. D. Lee and W. A. Backofen, Trans. AIME 236, 1077 (1966).
3. W. A. Backofen, W. F. Hasford, Jr., and J. J. Burke, Trans. ASM 55, 264 (1962).
4. H. W. Babel, D. A. Eitman, and R. W. McIver, Trans. ASME, J. Basic Engrg. 89, 13 (1967).
5. Development of Improved Biaxial Strength in Titanium Alloy Rocket Motor Cases Through Texture Hardening, AFRPL-TR-69-59, Lockheed Missiles and Space Co. (Feb 1969).
6. M. F. Amateau, D. L. Dull, and L. Raymond, The Effect of Processing on Plastic Strain Anisotropy of Ti-6Al-4V, TR-0059(6250-10)-5, The Aerospace Corp. (25 Sep 1970).
7. D. L. Dull and M. F. Amateau, The Basal Textures of Ti-6Al-4V Processed by Various Methods, TR-0066(5250-10)-15, The Aerospace Corp. (1 Feb 1971).

Preceding page blank