AD 735 743

TECHNICAL MEMORANDUM NO. LWL-CR-09FA71

DEVELOPMENT OF A TIMING AND SELF-DESTRUCT FUZE

Interim Report
Contract No. DAAD05-71-C-0107

By

Breed Corporation
Fairfield, New Jersey

August 1971

APPROVED FOR PUBLIC RELEASE;
DISTRIBUTION UNLIMITED

U. S. ARMY LAND WARFARE LABORATORY
Aberdeen Proving Ground, Maryland 21005

Best Available Copy

Unclassified

Security Classification

DOCUMENT CONTROL DATA - R & D

(Security classification of title, body of abstract and indexing annotation must be entered when the overall report is classified)

1. ORIGINATING ACTIVITY *(Corporate author)*

Breed Corporation
Fairfield, New Jersey

2a. REPORT SECURITY CLASSIFICATION

Unclassified

2b. GROUP

N/A

3. REPORT TITLE

Development of a Timing and Self-Destruct Fuze

4. DESCRIPTIVE NOTES *(Type of report and inclusive dates)*

Technical Memorandum - August 1971

5. AUTHOR(S) *(First name, middle initial, last name)*

6. REPORT DATE

August 1971

7a. TOTAL NO. OF PAGES

39

7b. NO. OF REFS

8a. CONTRACT OR GRANT NO.

DAAD05-71-C-0107

b. PROJECT NO.

LWL Project 03-F-71

c.

d.

9a. ORIGINATOR'S REPORT NUMBER(S)

9b. OTHER REPORT NO(S) *(Any other numbers that may be assigned this report)*

10. DISTRIBUTION STATEMENT

Distribution of this document is unlimited.

11. SUPPLEMENTARY NOTES

12. SPONSORING MILITARY ACTIVITY

U. S. Army Land Warfare Laboratory
Aberdeen Proving Ground, Maryland 21005

13. ABSTRACT

A feasibility study was successfully conducted to determine a design approach for the development of a Liquid Annular Orifice Dashpot (LAOD) timing and self-destruct fuze assembly which would interface with a Sandia Laboratory Seismic Trigger and have an eleven-second arming time and a 20-minute self-destruct time. A design was evolved which successfully passed in-line detonator propagation and out-of-line detonator safety tests and fulfilled the required arming and self-destruct times. An addition to the study proved the feasibility of incorporating an electronic package self-destruct system. Fifteen units were constructed three of which functioned satisfactorily at the contractor's test site. The remaining 12 were shipped for testing at the Land Warfare Laboratory.

DD FORM 1 NOV 65 1473 REPLACES DD FORM 1473, 1 JAN 64, WHICH IS OBSOLETE FOR ARMY USE.

Unclassified

Security Classification

ABSTRACT

A feasibility study was successfully conducted to determine a design approach for the development of a Liquid Annular Orifice Dashpot (LAOD) timing and self-destruct fuze assembly which would interface with a Sandia Laboratory Seismic Trigger and have an eleven-second arming time and a twenty-minute self-destruct time. A design was evolved which successfully passed in-line detonator propagation and out-of-line detonator safety tests and fulfilled the required arming and self-destruct times. An addition to the study proved the feasibility of incorporating an electronic package self-destruct system. Fifteen units were constructed, three of which functioned satisfactorily at the contractor's test site. The remaining twelve were shipped for testing at the Land Warfare Laboratory.

FORWARD

Contract DAAD05-71-C-0107, the subject of this final technical report, was a negotiated contract under 10 USC 230(e)(2), authorized by the Land Warfare Laboratory. The work was directed by Mr. Glenn Shira of the laboratory who first conceived the munition, was responsible for the technical approach, contacted the contractor on the arming and self-destruct phase of the problem, and contributed significantly to the progress made on this contract.

TABLE OF CONTENTS

1.	BACKGROUND, AIMS AND OBJECTIVES	1
2.	SUMMARY OF WORK COMPLETED	2
3.	TEST RESULTS	5
	3.1 Detonator Selection and Propagation Tests	5
	3.2 LAOD Arming and Self-destruct Timing Tests	9
	3.3 Self-destruct of Electronic Package	11
	3.4 Tests of the Complete Munition	11
4.	ANALYSIS	13
5.	CONCLUSIONS AND RECOMMENDATIONS FOR FURTHER WORK	16
	APPENDIX 1	A-1
	LAOD Theory	A-1
	Temperature Compensation	A-3
	LAOD Manufacture	A-5
	APPENDIX 2	
	Thiokol Report - Electronic Package Self-destruct Cover Letter	A-12

TABLE OF FIGURES

Figure 2	LAOD Cylinder Air Gage	A-7
Figure 3	LAOD Calibration Unit	A-8
Figure 4	Automated LAOD Test Unit	A-9
Figure 5	Automated Fuze Test Unit	A-10
Figure 6	Automated LAOD Assembly Machine	A-11
SK- No. 11721	Grain, Propellant Inhibited	A-15
SK- No. 11722	Test Arrangement	A-16
SK- No. 11723	Space Envelope	A-17

1. BACKGROUND, AIMS AND OBJECTIVES

The Breed Corporation was required to conduct a feasibility study to determine a design approach for the development of a timing and self-destruct fuze assembly meeting the following characteristics:

(1) Interface with Sandia Laboratory Seismic Trigger.

(2) The timing fuze shall be armed by pulling an arming pin. It was desirable that the safety pin require a 7 to 10 in-lb twist, plus a 2.25 to 5.75 lb. pull for extration. As an alternate, the withdrawal of an unstraightened safety pin which requires a 15 to 30 lb. straight pull was permitted. It was desired that a large pull ring be provided which will permit a firm grip for pin withdrawal.

(3) The fuze assembly must be capable of operating and functioning under environmental condition category 1, wet-warm, and category 2, wet-hot, AR 70-38. Operation under all environmental categories is desired but not essential.

(4) The fuze assembly was initially to include a 10 second arming timer, anti-disturbance mechanism, and a 20 minute self-destruct fuze mechanism. The fuze assembly must be armed 10 seconds (later changed to 11 ±2 sec.) after withdrawal of the arming pin and shall stay armed until a seismic disturbance is sensed or the self-destruct feature initiates the fuze 20 minutes after arming.

The study was to include the fabrication of fifteen (15) fuze assemblies interfaced with a seismic trigger and a munition to determine the adequacy of the design. The study involved the close coordination with Sandia Laboratories, the developer of the seismic trigger which detects the approach of pursuing enemy and sends the signal to the fuze. This coordination was necessary to eliminate any interface problems which could exist between the Breed Corporation and Sandia.

2. SUMMARY OF WORK COMPLETED

A sectioned model of the completed munition is shown photographically in Figure 1. The Drawing 040089002 is a drawing of the timer, munition assembly, and Drawing 040089003 is a drawing of the timer and self-destruct subassembly. Copies of these drawings with appropriate additional markings corresponding to the following description have been attached to this report. Referring now to Drawing 040089002, the timer and self-destruct subassembly is shown generally at 2. An explosion from this subassembly will ignite a propellant charge contained in container assembly 10 which produces sufficient thrust to propel fragmenter 11 at least 5 feet in the

air. The propellant 10 also ignites a pyrotechnic time delay in the fragmenter 11 which in turn ignites the explosive within the fragmenter when it has traveled approximately 5 feet.

The user through an action starts the arming and self-destruct timer simultaneously permitting the timing pin 7 to move vertically in its cavity, the electronic sensor begins a 15 second activation cycle.

Referring now to Drawing 040089003, pin 12 is removed when the timer and self-destruct subassembly is assembled into the timer munition assembly. Performing the same function is safety pin 5 of Drawing 040089002 which enters the same cavity through hole 13 of Drawing 040089003. When the safety pin is withdrawn, detonator assembly 7 begins moving to the right powered by spring 10. It's motion, however, is restricted by the LAOD timers 2 and 3. During the arming delay which is controlled by LAOD timer 2, shoulder 14 and tab 15 are contrained from lateral movements assuring that pins 16 and 17 remain butted to one another. Any disturbance of the mechanism or firing of the electronic circuit will thus now cause misalignment of these pins. After 10 seconds LAOD ball 18 has moved sufficiently far so that edge 14 and tab 15 are no longer so constrained permitting lateral motion of triggering subassembly 4 and misalignment of pins 16 and 17 if the mechanism is disturbed. If pins 16 and 17 become misaligned, detonator assembly 7 rapidly moves to align the detonator with hole 19 and simultaneously pin 11 aligns with slot 20. Tab 21 on firing pin 6 then forces tab 11 into slot 20 releasing the firing pin 6 which,

under the force exerted by spring 10, strikes the detonator which spits through hole 19 igniting the propellant charge for the fragmenter as described above. If the mechanism is not disturbed for a period of approximately 20 minutes LAOD ball 22 of LAOD 3 moves sufficiently to permit alignment of pin 11 and thus release of the firing pin in the manner described above.

If the seismic sensor is triggered, a capacitor dumps its charge into a piston squib which moves upward through hole 23 striking the triggering subassembly 4 and misaligning pins 16 and 17 and initiating the round as described above.

In addition to the sequences described above an additional requirement was added by Amendment P00002 to provide for self-destruct of the electronic package which would otherwise have remained intact under either the seismic or the self-destruct modes of functioning. Although this change was not physically incorporated into the 15 units delivered, feasibility was demonstrated as was the requirement of the amendment.

This munition was designed and tested sufficiently to prove feasibility under this contract. In addition, 15 units were constructed, 12 of which were sent to the Land Warfare Laboratory for testing with the remaining 3 tested in the presence of government representatives at the Breed Corporation for functioning on seismic disturbance and self-destruct. The various tests performed included verification of the 10 second arming delay and of the 20 minute self-destruct delay, verification of seismic sensitivity,

verification of out-of-line detonator safety and in-line explosive propagation, verification of self-destruction of the sensor and electronic package as well as verification of operating and functioning under environmental condition, category 1, wet-warm, category 2, wet-hot, AR 70-38. The test results are described in detail in Section 4 and the appropriate mathematical analysis of the LAOD timers in Section 5.

3. TEST RESULTS

3.1 Detonator Selection and Propagation Tests

Forty-five explosive tests were conducted in test fixtures which simulated the timer and self-destruct subassembly. Five tests were run using a detonator, 5 using an M104 detonator and the remander all using the M55 detonator. The results of these forty-five tests are shown in Tables 3.1 through 3.6. Based on the results shown in Table 3.1, the M55 detonator was chosen to be used with this munition. In the out-of-line tests shown in Table 3.2, slight burning of the separation charge occurred in Tests 16 through 20. An .008" thick aluminum foil disc was then added below the separation charge and the out-of-line test repeated. The results of Test 21 through 25 indicated an improvement, however, there was still some very slight burning of the separation charge. Tests 26 through 30 shown in Table 3.3 indicate that some problem existed also with the use of the .008" foil in getting propagation in the in-line case. An attempt to solve both of these problems was made. The timing and self-destruct

TABLE 3.1

In-line Detonator Propagation Tests

Test No.	Detonator Type	Results
1	M-98	Incomplete burning of separation charge
2	M-98	"
3	M-98	"
4	M-98	"
5	M-98	"
6	M-104	Separation charged burned satisfactorily
7	M-104	Incomplete burning of separation charge
8	M-104	"
9	M-104	Separation charge burned satisfactorily
10	M-104	"
11	M-55	"
12	M-55	"
13	M-55	"
14	M-55	"
15	M-55	"

TABLE 3.2

M-55 Out-of-line Detonator Propagation Tests

Test No.	Modification	Results
16	NONE	Slight burning of separation charge
17	NONE	"
18	NONE	"
19	NONE	"
20	NONE	"
21	.008" Foil	Very slight burning of separation charge
22	"	"
23	"	"
24	"	"
25	"	"

TABLE 3.3

M-55 In-line Detonator Propagation Test

with .008 inch Aluminum Foil

Test No.	Results
26	Incomplete burning of separation charge
27	"
28	"
29	"
30	"

TABLE 3.4

M-55 In-line Detonator Propagation Tests

with Lengthened Timing and Self-destruct Assembly

and Angled Propagation Hole

Test No.	Results
31	Separation charge burned satisfactorily
32	"
33	"
34	"
35	"

assembly was lengthened to improve out-of-line detonator safety and the propagation hole was placed on an angle so as to more adequately cover the output of the detonator and also to bring the explosive output of the detonator to the most sensitive part of the separation charge. The in-line tests described in Table 3.4 indicate that the results were satisfactory. Out-of-line tests, however, as shown in Table 3.5 indicate that the separation charge was again damaged slightly. In an attempt to solve this problem a relief hole was added under the detonator in the out-of-line position and the out-of-line tests repeated. This resulted in no damage to the separation charge as reported in Table 3.6.

Three in-line tests were conducted at a later date. Two of which functioned satisfactorily, however, the third case resulted in incomplete burning of the separation charge. Later, however, three additional tests were run on the entire munition, all of which resulted in satisfactory burning of the separation charge. Nevertheless, the one failure indicates a possible problem may exist in this area. Larger numbers of explosive tests should therefore be run to gain statistical evidence of the reliability of both in-line propagation and out-of-line safety.

3.2 LAOD Arming and Self-destruct Timing Tests

During the time period covered by the second progress report, two LAODs were constructed to give an arming delay of 11 ±2 seconds. The times actually achieved were 9.8 and 11 seconds. Five LAODs were constructed to give a self-destruct time of 25 ± 5 minutes. The actual times

TABLE 3.5

M55 Out-of-line Detonator Propagation Tests with Lengthened Timing and Self-destruct Assembly and Angled Propagation Hole

Test No.	Results
36	Slight damage to separation charge
37	"
38	"
39	"
40	"

TABLE 3.6

M55 Out-of-line Detonator Propagation Tests with Relief Hole added under Detonator in Out-of-line Position

Test No.	Results
41	No damage to separation charge
42	"
43	"
44	"
45	"

achieved were 23, 23, 24, 26 and 29 minutes. During the third reporting period three inert timing and self-destruct units were assembled and functioned for both the arming and self-destruct times. These results are reported in Table 3.7. In addition, 20 LAODs were tested for the arming time using simulated test fixtures. The results of these tests are shown in Table 3.8.

All of these test results indicate satisfactor agreement with the theory.

3.3 Self-destruct of Electronic Package

The Thiokol Chemical Corporation conducted a study to design and prove feasibility of the use of a propellant charge to act as a destruct device for the withdrawal deterring munitions. Sufficient work was accomplished to demonstrate the effectivity of the Thiokol design propellant charge as reported in the attached report in Appendix 1. Although provision was not made in the present withdrawal deterring munition to incorporate the electric detonator and propellant charge necessary for destruction of the circuit boards, such a provision can easily be made and should be made since feasibility has been demonstrated.

3.4 Tests of the Complete Munition

Three units were taken from the 15 units which were constructed and the remaining 12 sent to the Land Warfare Laboratory. In the presence of

TABLE 3.7

LAOD No.	Arming Time	Self-destruct Time
1	12 seconds	19 minutes
2	9 "	23 "
3	11 "	28 "

TABLE 3.8

The Short Term LAOD (Arming) Test Results

LAOD No.	Time	LAOD No.	Time
1	11.5 seconds	11	11.0 seconds
2	9.0 "	12	12.3 "
3	11.0 "	13	11.6 "
4	11.5 "	14	12.2 "
5	9.2 "	15	8.0 "
6	9.8 "	16	12.2 "
7	10.3 "	17	11.8 "
8	10.8 "	18	11.1 "
9	14.0 "	19	12.3 "
10	14.5 "	20	No data

Mr. Glenn Shira, the project officer, two units were planted and initiated by pulling the safety pin. After an excess of 15 seconds a person approached the area of the munition which successfully responded and propelled the inert loaded fragmenter in excess of five feet into the air. The third unit was to be tested for self-destruct, however, it functioned in approximately 2 minutes after initiation probably due to vibrations in the vicinity. Disassembly revealed that actuation had been caused electrically. The self-destruct LAOD had not completed its travel.

4. ANALYSIS

The mathematical derivation of the equations governing the operation of the LAOD timers is presented in Appendix 2. Computer printouts showing the variation in the time delay as the function of temperature is shown in Tables 4.1 and 4.2.

The symbols in the tables have the following definitions:

V1 = the kinematic viscosity of fluid at temperature T1

V2 = kinematic viscosity of fluid at temperature T2 (^{o}F) centistokes

K1 = position constant of ball axis relative to cylinder axis

P = pressure beneath ball and cylinder

D = diameter of cylinder

J = printing frequency

K3 = coefficient of thermal expansion of the ball/^{o}F

K4 = coefficient of thermal expansion of the glass cylinder/^{o}F

K6 = exponential variation of flow rate with clearance

H0 = diametral clearance at ambient temperature

TABLE 4.1

V1= 900 V2= 40 T1=-60 T2= 175
K1= .516401 P= 50 D= .125 J= 10
K3= 9.600000E-06 K4= 1.670000E-06 K6= 2.5 K8= 2.500000E-04

T	SECONDS	VEL.RATIO	VIS. CS	VIS.RATIO	CLEARANCE E-06
-65	37.5267	1.	985.919	22.9735	383
-55	31.8421	1.17852	788.548	18.3627	373
-45	27.486	1.36923	637.781	14.8613	363
-35	23.9867	1.56971	522.154	12.167	354
-25	21.1191	1.7769	432.959	10.0877	344
-15	18.8889	1.98755	361.945	8.41292	334
-5	17.2726	2.19887	304.471	7.09465	324
5	15.6858	2.46467	258.946	6.03384	314
15	14.4143	2.69343	221.976	5.17238	304
25	13.4479	2.79852	191.685	4.46656	294
35	12.6688	2.96212	166.667	3.88859	284
45	12.0486	3.11462	145.846	3.39844	274
55	11.5654	3.24474	128.394	2.99177	264
65	11.2838	3.34046	113.668	2.64565	254
75	10.9523	3.42658	101.161	2.3572	245
85	10.8041	3.47338	90.4773	2.10826	235
95	10.7557	3.489	81.2998	1.89441	225
105	10.807	3.47245	73.3741	1.70978	215
115	10.962	3.42335	66.496	1.54946	205
125	11.2278	3.34229	60.4962	1.40966	195
135	11.6175	3.23818	55.2414	1.28721	185
145	12.1495	3.08875	50.6189	1.1795	175
155	12.8498	2.9294	46.5857	1.08436	165
165	13.7562	2.72799	42.9156	1.	155

NOT REPRODUCIBLE

TABLE 4.2

V1= 95000. V2= 1250 T1=-40 T2= 220
K1= .516401 P= 60 D= .125 J= 10
K3= 9.60000E-06 K4= 1.67000E-06 K6= 2.5 H0= 3.00000E-04

T	MINUTES	VEL.RATIO	VIS. CS	VIS.RATIO	CLEARANCE E-06
-65	69.692	1.	149200.	22.0305	433
-55	60.5054	1.15183	122961.	18.1551	423
-45	53.0114	1.31466	102116.	15.0774	413
-35	46.8531	1.48746	85424.5	12.6129	404
-25	41.758	1.66895	71950.5	10.6235	394
-15	37.5165	1.85763	60991.3	9.00537	384
-5	33.9669	2.05176	52013.7	7.67982	374
5	30.984	2.24929	44610.7	6.58678	364
15	28.4696	2.44795	38465.3	5.67985	354
25	26.3436	2.6455	33339.6	4.9226	344
35	24.5449	2.83936	29033.4	4.28579	334
45	23.0248	3.02682	25399.	3.75017	324
55	21.7434	3.2052	22315.7	3.29491	314
65	20.6693	3.37176	19687.1	2.9068	304
75	19.7775	3.5238	17435.6	2.57437	295
85	19.0487	3.65862	15499.	2.28843	285
95	18.4675	3.77377	13826.	2.04141	275
105	18.0232	3.86679	12375.1	1.82718	265
115	17.7084	3.93552	11112.1	1.6407	255
125	17.5182	3.97826	10008.2	1.47771	245
135	17.4527	3.9932	9040.6	1.33485	235
145	17.5135	3.97932	8189.22	1.20914	225
155	17.7078	3.93567	7437.98	1.09822	215
165	18.045	3.86213	6772.77	1.	205

READY

The column headings in the tables represent the temperature and degrees fahrenheit, the time delay, the velocity ratio of the piston to its velocity at -65°F, the kinematic viscosity of the fluid in centistokes, the viscosity ratio to the viscosity at 165°F and the diametral clearance in microinches.

Neither of the two LAODs were constructed to give optimum temperature compensation which in both cases would take place at a diametral clearance near 200 microinches. Since the aim of this program was to demonstrate feasibility it was decided to use fluids currently on hand and to vary the clearance to achieve the proper ambient time delay. In the next stage of this program, specific fluids will be obtained giving the proper time delay at the clearance chosen for optimum temperature compensation.

5. CONCLUSIONS AND RECOMMENDATIONS FOR FURTHER WORK

The LAOD timers functioned according to design and both in-line and out-of-line explosive tests proved reasonably satisfactory. Only limited environmental tests were run and the limited number of explosive tests indicate that a significantly larger number of tests should be conducted to determine statistical reliability. In addition, there is some concern as to the

sensitivity of the geophone, since one of the three units tested did not go to self-destruct but fired presumably upon sensing a seismic disturbance created at a significant distance from the geophone. In addition, of course, the results of the circuit board destruction study should be incorporated in the munition design.

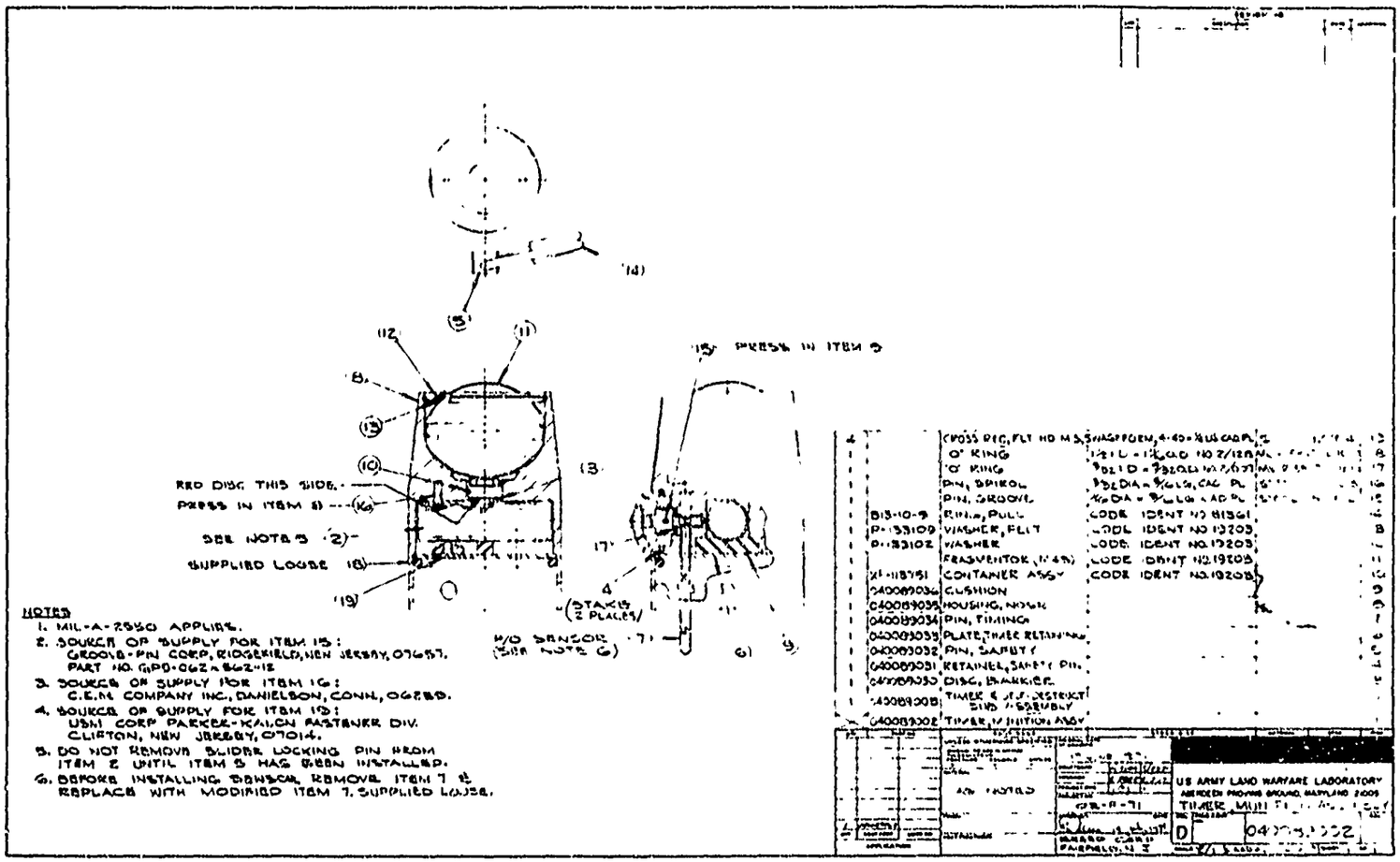
RED DISC THIS SIDE.
PRESS IN ITEM 8
SEE NOTE 5
SUPPLIED LOOSE
PRESS IN ITEM 5
STAKE (2 PLACES)
R/O SENSOR (SEE NOTE 6)
NOTES
1. MIL-A-2550 APPLIES.
2. SOURCE OF SUPPLY FOR ITEM 15: GRODLE-PIN CORP, RIDGEFIELD, NEW JERSEY, 07657. PART NO. GPD-062-862-12
3. SOURCE OF SUPPLY FOR ITEM 16: C.E.M. COMPANY INC., DANIELSON, CONN, 06239.
4. SOURCE OF SUPPLY FOR ITEM 19: USM CORP PARKER-KALON FASTENER DIV. CLIFTON, NEW JERSEY, 07014.
5. DO NOT REMOVE SLIDER LOCKING PIN FROM ITEM 2 UNTIL ITEM 5 HAS BEEN INSTALLED.
6. BEFORE INSTALLING SENSOR, REMOVE ITEM 7 & REPLACE WITH MODIFIED ITEM 7, SUPPLIED LOOSE.
CROSS REC. FLT HD M.S.
O' RING
O' RING
PIN, SPIROL
PIN, GROOVE
RING, PULL
WASHER, FELT
WASHER
CONTAINER ASSY
CUSHION
HOUSING, NOSE
PIN, TIMING
PIN, SAFETY
RETAINER, SAFETY PIN
DISC, BARRIER
TIMER & DETONATOR SUB ASSEMBLY
TIMER, MUNITION ASSY
B13-10-9
P-133109
P-133102
CODE IDENT NO 19205
US ARMY LAND WARFARE LABORATORY
ABERDEEN PROVING GROUND, MARYLAND 21005
D

REVISIONS			
LTR	DESCRIPTION	DATE	APPROVED

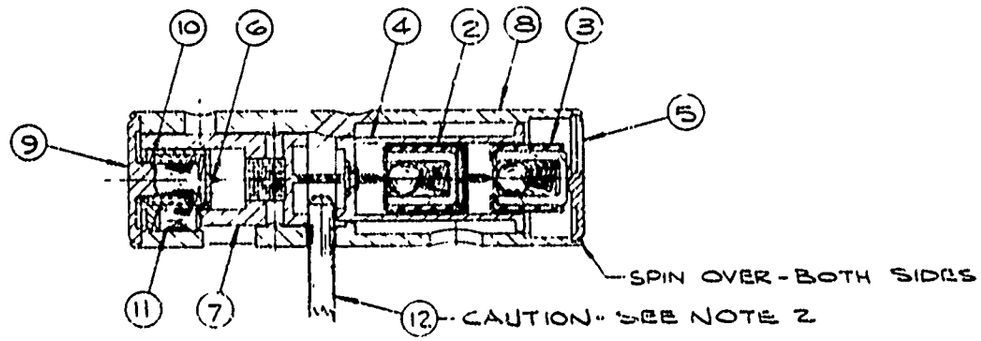

NOTES

1. MIL-A-2550 APPLIES.
2. DO NOT REMOVE SLIDER LOCK PIN ITEM 12, UNTIL FINAL ASSEMBLY & ARMING PIN HAS BEEN INSTALLED.
3. FUZE SHALL FUNCTION AT 10 SECONDS ± 2 SECONDS & SHALL SELF-DESTRUCT IN 20 MINUTES ± 4 MINUTES.

QTY	PART NO.	PART NAME
1	MS9486-46	PIN, STRAIGHT, HEADLESS .0936/.0940 DIA × 1½ LONG
1	040089022	PIN, FIRING PIN LOCK
1	040089021	SPRING, FIRING PIN
1	040089020	SUPPORT, SPRING
1	040089019	BODY, TIMER
1	040089023	SLIDER & DETONATOR SUB ASSEMBLY
1	040089017	PIN, FIRING
1	040089016	SUPPORT, END CAP
1	040089015	TRIGGERING SUB ASSY
1	040089012	LADD ASSY, 20 MINUTE
1	040089011	LADD ASSY, 10 SECOND
1	040089005	TIMER SUB ASSY

MATERIAL	SPEC	REV

UNLESS OTHERWISE SPECIFIED

AS INSTALLED

08-F-71

BREED CORP
FAIRFIELD, N.J.

[redacted]

ABERDEEN PROVING GROUND MARYLAND 21005

U.S. ARMY LAND WARFARE LABORATORY

TIMER & SELF-DESTRUCT SUB ASSEMBLY

C | 040089003

SCALE 4/1 | DAAD05-71-C-0107 | SHEET 1 OF 1

APPENDIX 1

LAOD Theory

The motion of the piston in the cylinder depends upon the geometrical characteristics of the particular device expressed through the pressure-flow relationship. This pressure flow relation is:

$$f\ (\theta) = \frac{h^3}{12\mu}\ \frac{dP}{dX} \tag{1}$$

where:

$f\ (\theta)$ = flow per unit circumferential length

h = local clearance (a function of x and θ)

μ = viscosity

X = coordinate along cylinder axis

θ = angular coordinate along cylinder circumference

Simultaneously, it must be that

$$\int_0^2 f(\theta)Rd = \pi R^2 \frac{dX}{dT} \tag{2}$$

which states that the total flow rate is that which is displaced by piston moving at a velocity $\frac{dX}{dT}$.

The pressure at the high pressure side of the piston is:

$$P = \frac{F}{\pi R^2} \tag{3}$$

where:

F = axial force on the piston

R = radius of the piston

The solution of equations (1) and (2) with the boundary conditions (3) and letting P = 0 on the low pressure side of the piston, yields the relationship between the applied force (F) and the piston velocity $\frac{dX}{dT}$. The particular geometry of a given device enters through the clearance function (H(X,θ). For the particular case of a spherical piston, this clearance function h(X,θ) can be approximated by:

$$h = c + e \cos\theta + \frac{X^2}{2R}$$

where:

c = mean radial clearance

e = distance between the cylinder axis and the sphere center

For the spherical case, the relation between F and $\frac{dX}{dT}$ therefore is:

$$\frac{dX}{dT} = \frac{\sqrt{2}\,F}{9\pi^3 R^{7/2}\mu} \int_0^{2\pi} (C + e \cos\theta)^{5/2} d\theta$$

Which for the case where the ball is centered in the cylinder is:

$$\frac{dX}{dT} = \frac{2\sqrt{2}\,F}{9\pi^2 \mu R} \left(\frac{h}{R}\right)^{5/2}$$

Similarly, for the case of a centered cylinder piston, the above equations reduce to:

$$\frac{dX}{dT} = \frac{Fh^3}{6\pi\mu R^3 L}$$

where L is the length of the piston.

Further analysis of the above equations will shown that for travel along the side of the cylinder wall, a ball will travel 1.92 times faster than for centered travel and a cylindrical piston will travel 2.5 times faster than for centered travel.

Temperature Compensation

Since the viscosity of the silicone fluids varies by a factor of about 27 to 1 from -65°F to +160°F some means of temperature compensation must be included in the LAOD. This is accomplished by utilizing the difference in thermal expansion coefficients of the piston and cylinder to change the magnitude of the clearance and thus the restriction to the flow of the fluid over the temperature range. Thus, by using a piston with a larger coefficient of expansion than the cylinder the clearance will become much smaller at +160°F where the fluid is less viscous and become much larger at -65°F where the fluid is more viscous.

Once a given geometry is chosen, that is, once a nominal ball size is chosen for the piston, the clearance is determined based upon temperature compensation. That is, what is the optimum clearance to give the best temperature compensation over the temperature range of -65°F to +160°F? Since this calculation is quite tedious a computer program has been written to accomplish this automatically. The input to the program consists of the viscosities of the silicone fluids at two different temperatures,

the thermal expansion coefficients of the piston and cylinder, the temperature range over which the clearance is to be optimized and the clearance at which the program begins calculating. The program will then calculate the velocity of the ball at every ten degrees over the inputted temperature range and take a ratio of the largest velocity to the slowest velocity. It will than increase the diametral clearance by 10 millionths and repeat the above calculations. Then it will compare the ratio of the velocities obtained in the second pass to that obtained in the first pass and if this ratio is smaller, it will repeat the process increasing the diameter by 10 millionths. This will proceed until the ratio of the velocities increases at which time the optimum clearance will be printed out along with a table giving each temperature, the velocity at that temperature, the ratio of this velocity to the velocity at -65°F, the viscosity of the fluid and the ratio of the viscosity to the viscosity at +165°F and the clearance at each temperature.

The resultant tables yield accurate results as long as the fluid is Newtonian which is generally the case for the silicone fluids having viscosities of up to 1000 centistokes. Above this level the fluid begins to become non-Newtonian and has appreciable non-Newtonian effects when the viscosity reaches values which are used for several day delays. The non-Newtonian effects express themselves by the fact that the clearance for optimum temperature compensation determined experimentally is much larger than that which is determined theoretically. In other words, the viscosity of the fluid is a function of the clearance. As a result, for

any given viscosity fluid above 1000 centistokes, considerable experimental testing must be undertaken to determine experimentally the clearance for optimum temperature compensation.

LAOD Manufacture

The cylinders are produced from standard glass tubing which is first cut to length, then bottomed and finally shrunk to the proper internal diameter on hypodermic syringe shrinking equipment. The total variance of diameters is typically 100 microinches. Air gaging equipment comprising a tungsten bearing ball with an axial located hole which is connected to a hollow tube through which choked flow air flows, is used in place of the conventional two jet spindle air gaging equipment to assure that the cylinder internal diameters fall within the proper tolerances.

Typical spherical pistons are produced identical to bearing balls commencing with heading operation followed by several grinding and lapping operations. Size control is to 5 microinches. Large quantities are currently being produced for the ballpoint pen industry.

Silicone fluids or gums are purchased to desired viscosity or, if not available, two fluids from the same silicone family are mixed in standard blending equipment to obtain the desired viscosity. Standard fluid pumping equipment is used to force fluids through absolute filters and directly into the LAOD cylinders.

The assembly of the LAOD consists first of filling the cylinder with a low viscosity fluid, then inserting a standard diameter ball on

probe and under a known force to determine the exact distance the ball travels in a fixed time period of, for example, 3 seconds. The distance traveled is measured by a differential transformer which feeds information to the computer which simultaneously calculates exact piston ball diameter to result in the desired piston travel in a fixed time with the gaging liquid. The cylinder is then again filled with gaging liquid, the selected ball is inserted, and the test again repeated to verify desired LAOD operation. The gaging liquid is then removed from the cylinder and the piston and cylinder are flushed clean. The cylinder is now filled with the desired viscosity fluid, the piston ball reinserted and the LAOD inserted into its holder. All assembly operations can be automatically performed on a twenty station, 42" diameter, computer controlled, indexing machine. Such a machine is presently 70% complete. Individual hand loaded stations similar to automated stations for air gaging and liquid gaging are shown on the following two pages (Figures 2 and 3). A fifty unit automated LAOD test fixture suitable for insertion into temperature chambers is shown in Figure 4. A fifty unit automated LAOD/WAAPM fuze test fixture also suitable for insertion into temperature chambers is shown in Figure 5. The automated LAOD assembly machine capable of producing a calibrated tested LAOD timer every few seconds is shown in Figure 6.

NOT REPRODUCIBLE

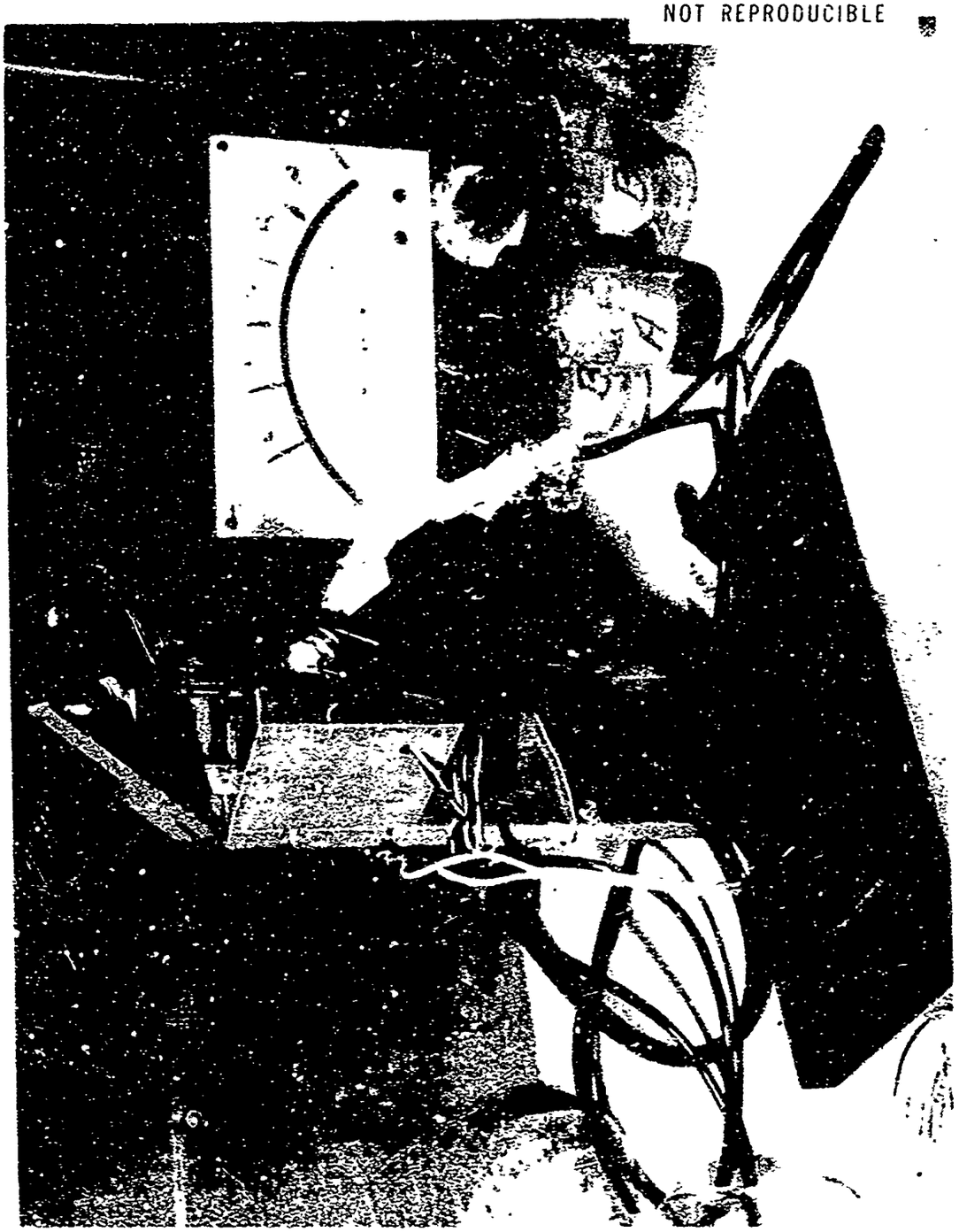

LAOD Cylinder Air Gage
Figure 2

NOT REPRODUCIBLE

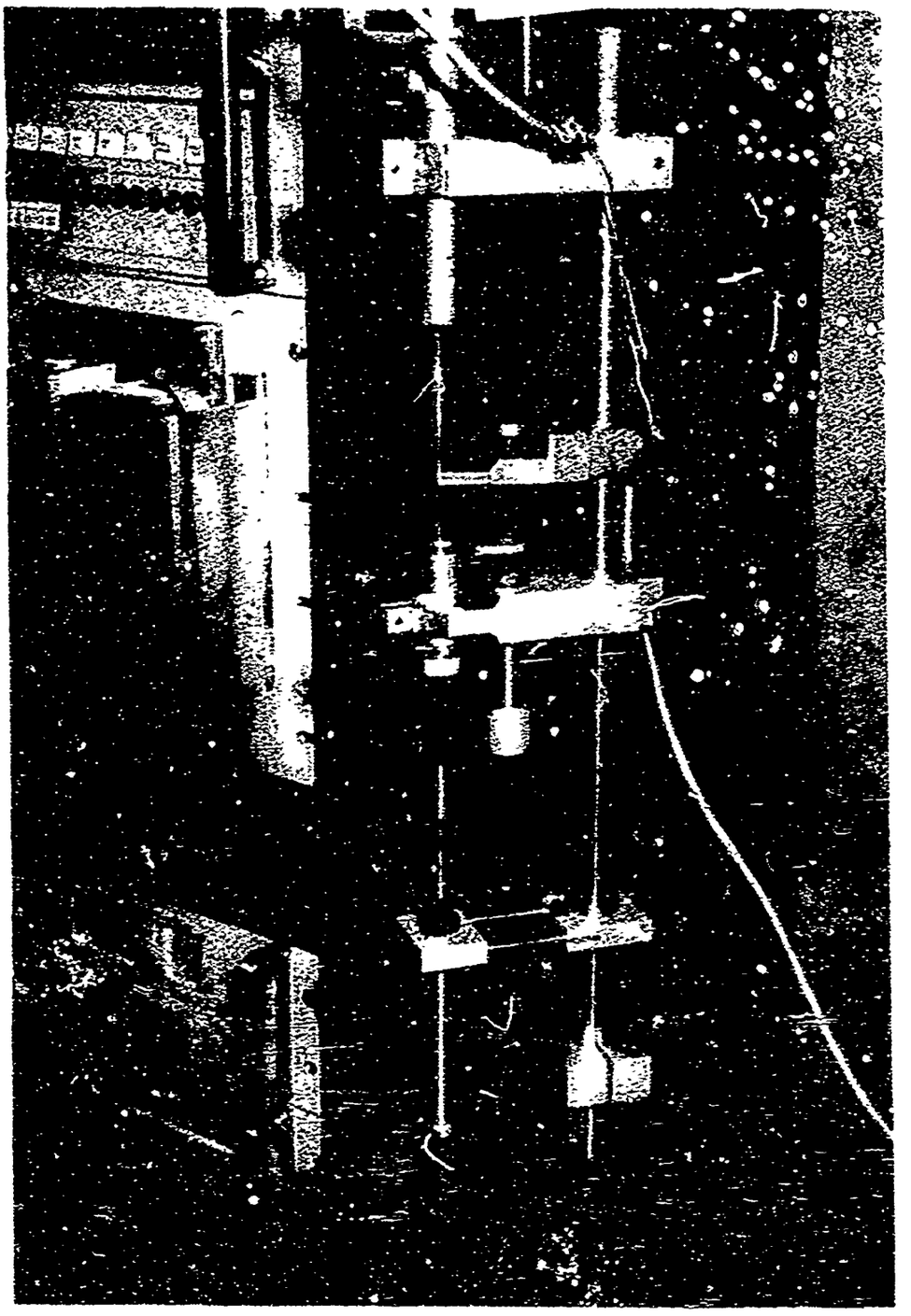

ΔAOD Calibration Unit
Figure 3

NOT REPRODUCIBLE

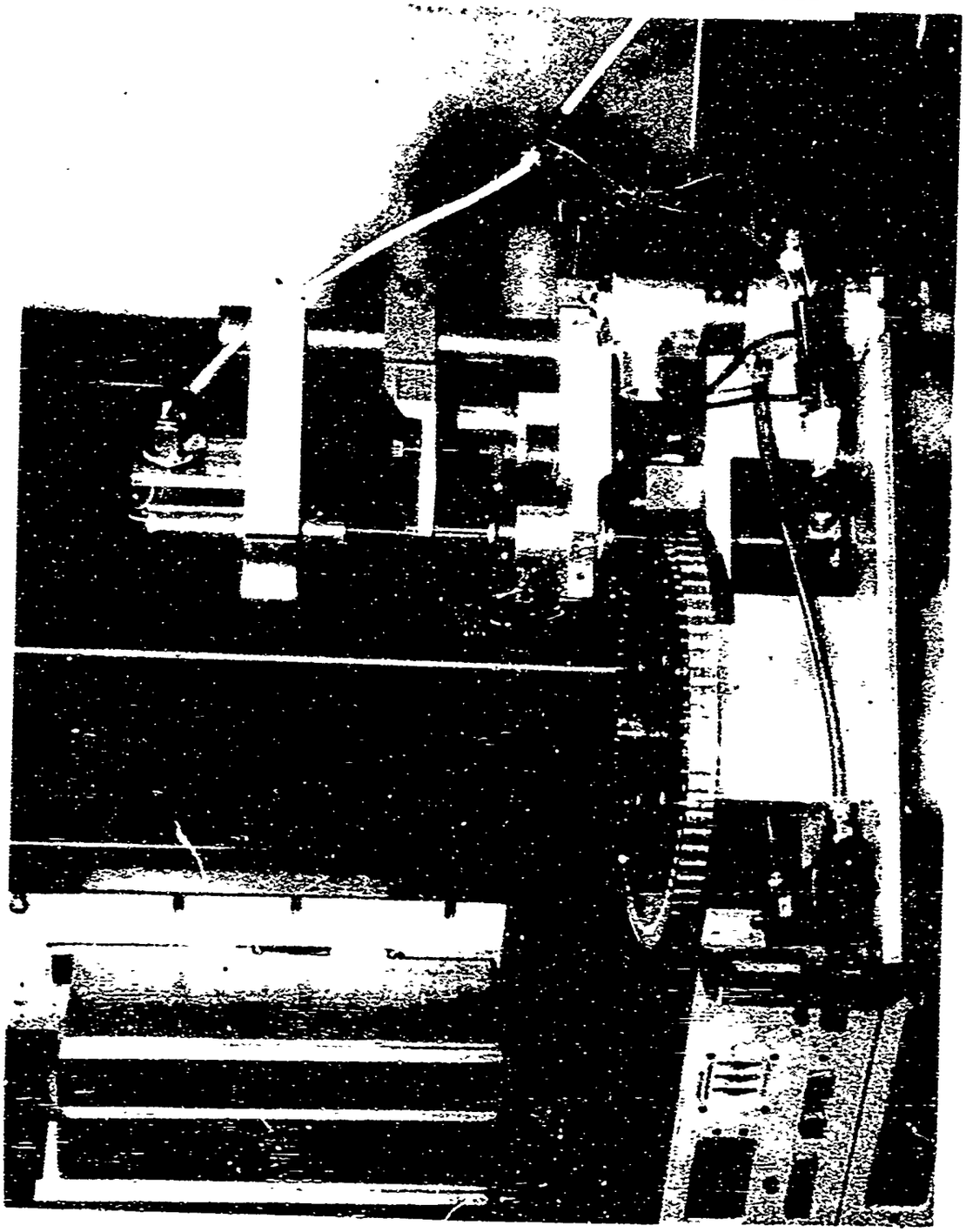

Automated LAOD Test Unit
Figure 4

NOT REPRODUCIBLE

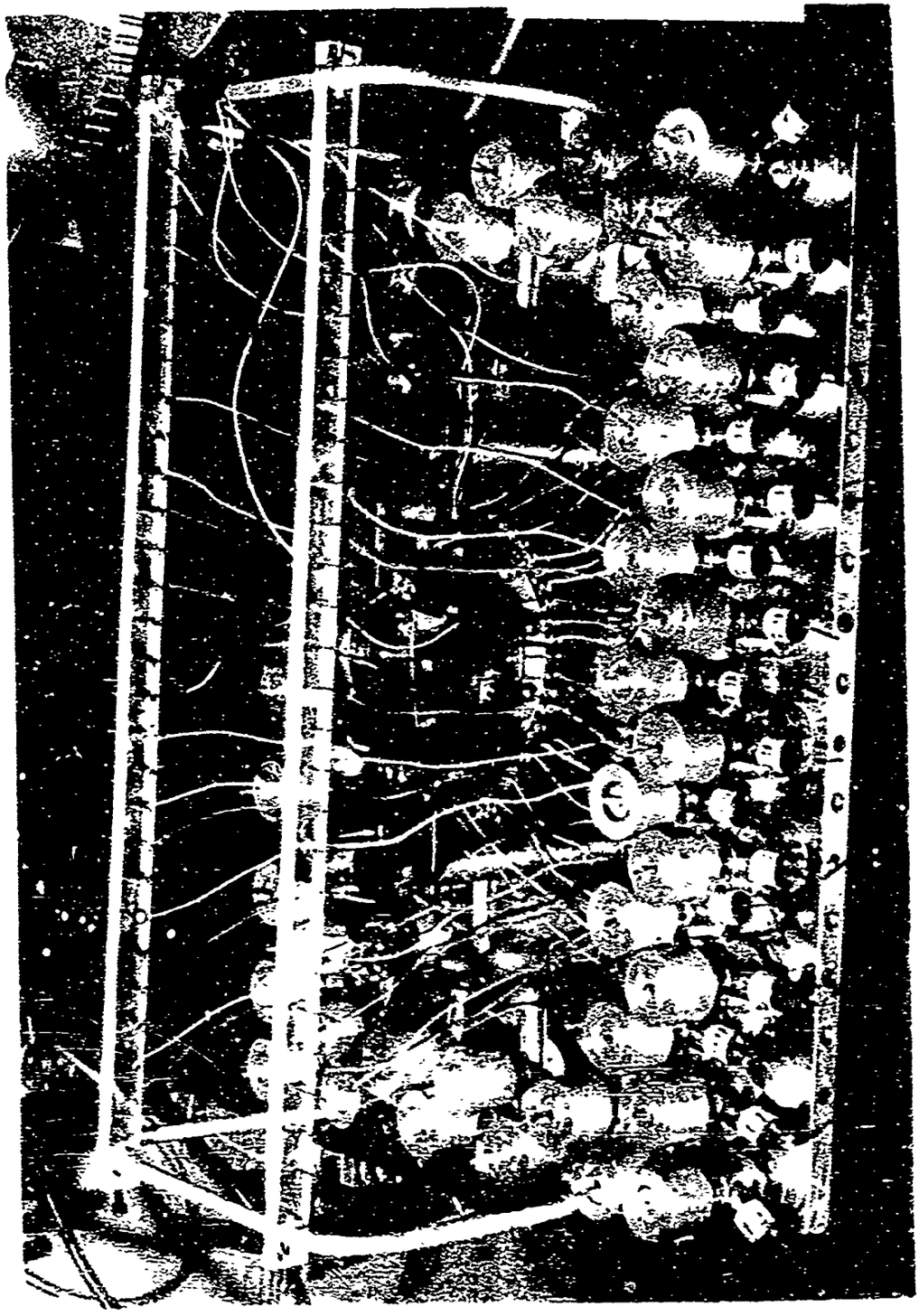

Automated Fuze Test Unit
Figure 5

NOT REPRODUCIBLE

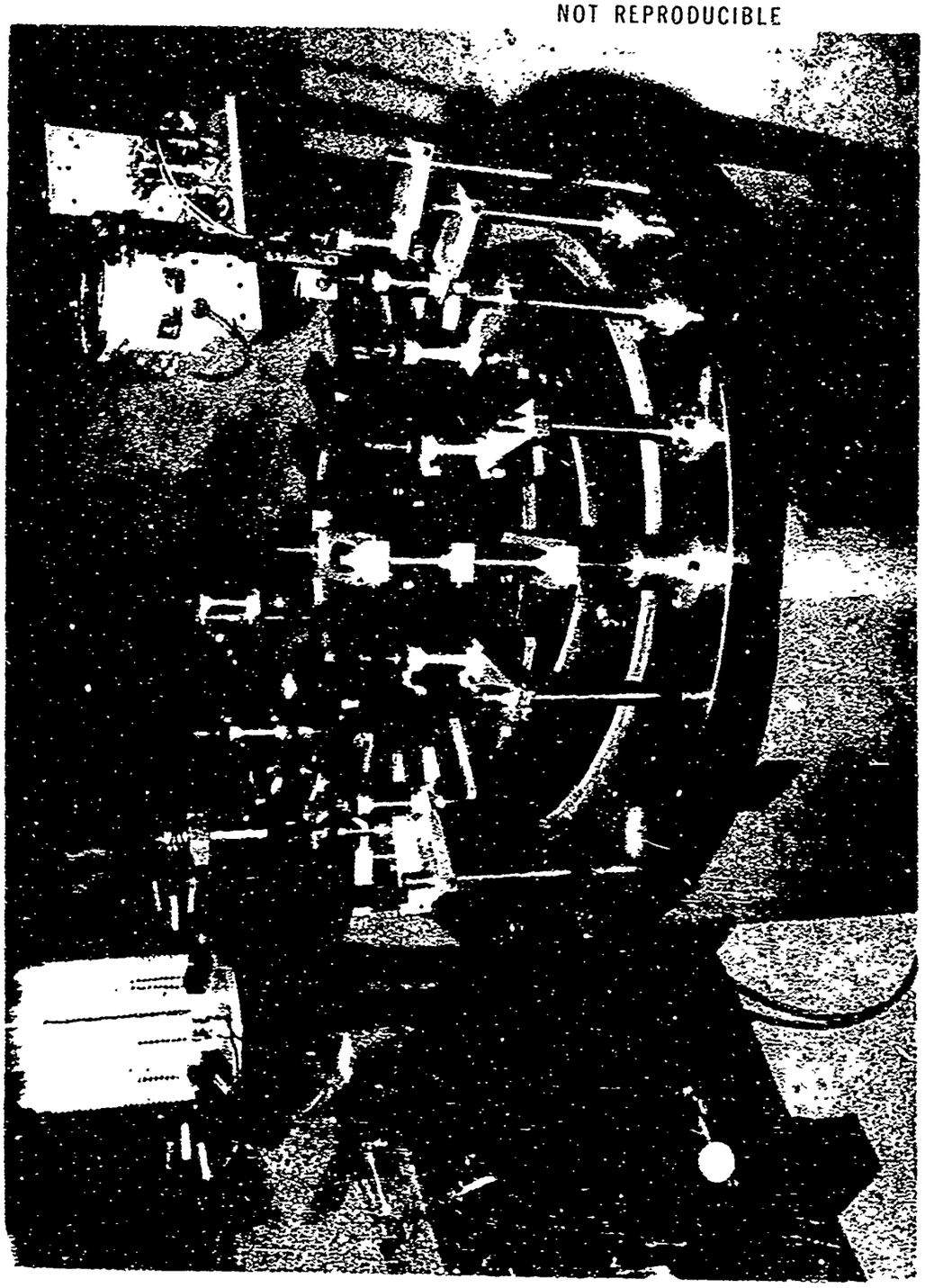

Automated LAOD Assembly Machine
Figure 6

TELEPHONE
301-398-3000

Thiokol
CHEMICAL CORPORATION
ELKTON DIVISION
ELKTON MARYLAND 21921

TWX
301-398-3914

May 26, 1971
Ref: 2228-008

Breed Corporation
20 Spielman Road
Fairfield, New Jersey 07006

Attention: Mr. T. Thuen

Subject: Report of Work under Breed Corporation Purchase Order 7176.

Gentlemen:

The subject purchase order covers the design, feasibility test and delivery of a propellant charge to act as a destruct device for a Breed Corporation system. Sufficient work has been accomplished to demonstrate the effectivity of the Thiokol designed propellant charge as reported herein, and we are ready to deliver the required quantity of propellant charges However, per our discussion of May 20, 1971, because the present design of your system will not accommodate the propellant charge, we are recommending an alternative in lieu of the deliveries. That is, for Breed (through the Land Warfare Laboratory) to supply the mold for the electronic package and the material for the circuit boards to Thiokol, whereupon we will mold a number of packages (2 or 3) with a polystyrene plastic and subject them to a destruct test using our existent fixtures. In this way, more useful information will be available for the next phase of your program in which your system will be able to accommodate the destruct device.

If further information or clarification is required, please do not hesitate to contact us.

Very truly yours,

THIOKOL CHEMICAL CORPORATION
ELKTON DIVISION

S. Kessler

S. Kessler
Program Manager

SK/pc

Attachments

cc: Mr. G. Shira (w/enc)
LWL/APG

A. DESIGN OF DESTRUCT DEVICE

Based on the information supplied by Breed on the envelope available for the propellant, the charge was sized as shown on drawing SK11721.

The propellant selected for use is Thiokol-designated TP-H-3174B. This hydrocarbon polymer propellant is easily ignited and contains no solids like aluminum, so it is clean burning. The burning rate of the propellant is such that a burn time of 5 seconds will result in the Breed device.

The charge is made by cutting the proper thickness of propellant from a rod of the proper diameter and then cutting the resultant cylindrical shape in half. An inhibitor is then brushed on all surfaces, except the face of the grain, as shown on the drawing.

Two different electrically initiated squibs were selected for and successfully demonstrated their capability to initiate the propellant. The ultimate selection was the Dupont-designated S-67 squib. This squib has been manufactured by the thousands and is very economical. Thiokol routinely uses this squib in many other applications. The space required for this squib in the electronic package is shown on drawing SK 11723.

B. TEST FIXTURES

In order to demonstrate the effectiveness of the destruct device, some simple test fixtures were designed and fabricated as shown in drawing SK11722. The design fixtures consisted of a steel tube which simulated the Breed electronic package case; a graphite holder for the propellant charge, which also simulated a part of the case; and a graphite squib holder to simulate the electronic package. (This latter test fixture was replaced with the plastic electronic package as shown on Drawing SK11721 for the final demonstration test.)

C. TESTS

Three series of tests were performed in a stepwise progression to demonstrate the destruct device capability:

1. Squib Initiation Tests

A number of available squibs were investigated for use in this system. Since the power source available is from a 200 Microfarad capacitor charged from a 15 VDC battery, only 25 millijoules of power will be available. This dictated squibs which could be initiated with low amperage. The Dupont S-67, S-94, and

U. S. Flare 207A squibs all are capable of being fired from such a power source. Three squibs each of the Dupont-designated S-67 and S-94 series were successfully open-air fired with a 15 VDC source to demonstrate this capability. This capability was further demonstrated by open-air firing, one each of these two squibs with a LWL-supplied device on May 19, 1971.

2. Propellant Initiation Tests

Once we had established that squibs could be successfully ignited with the available power source, we next had to demonstrate that the propellant charge could be initiated with the squib. Each of the types of squib successfully tested in Part 1 above, as well as another Dupont squib, S-75, were evaluated for this by using the test arrangement shown in drawing SK11722; except that the graphite squib test holder was used instead of the plastic electronic package. The S-67 and S-94 squibs both successfully ignited the propellant charge. The S-75 squib did not. Because the S-67 squib was less brissant and provided a longer burn time than the S-94 squib, it was selected for this application. The capability of this squib to ignite the destruct charge was demonstrated again on May 19, 1971 using the LWL-supplied power source in the Thiokol test fixture.

3. Destruct Test

LWL supplied Thiokol with one foamed electronic package containing the circuit boards of the latest selected material. Photographs of this device are enclosed. As can be seen in the attached photographs, there are three circuit boards in the package and only the edges are exposed. As a matter of fact, even the edges were partially covered by flash from the foaming operation. The plastic package was assembled in the Thiokol test fixture as shown in drawing SK11722, and the destruct device initiated. The propellant ignited and burned some of the foam and, in turn, ignited the circuit boards causing them to burn-up as shown in the photograph (Figure 4). The remains of the foamed part were then sectioned as shown in the photograph (Figure 5), and disclosed that only two of the three circuit boards was consumed. The test is considered completely successful in spite of this. In future tests, we will only need expose a small portion of the board to assure complete destruction.

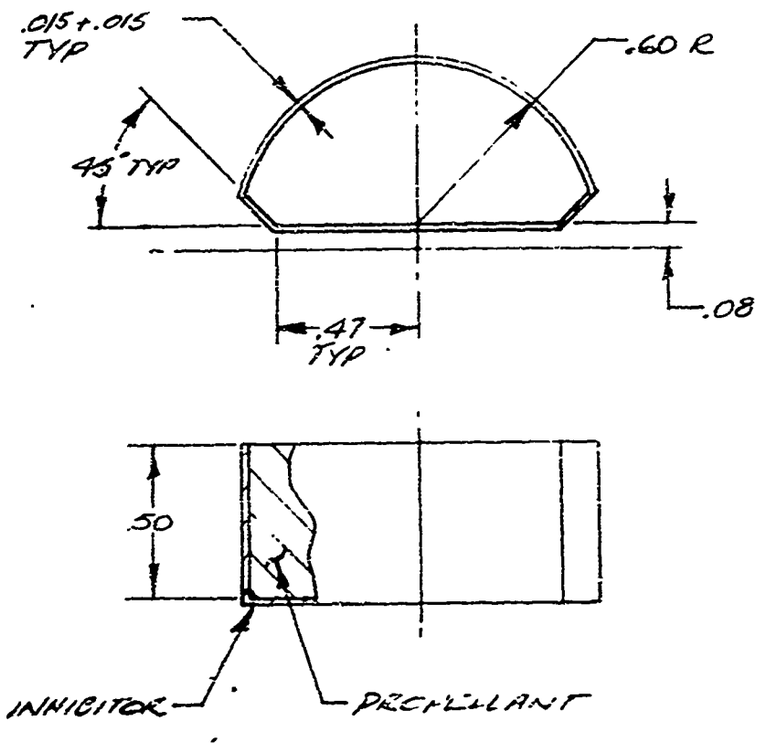

MATERIAL:

1. PROPELLANT - TP-H-3174B
2. INHIBITOR - TA-C-324A WITH CAB-O-SIL

SCALE: 2/1

	INIT	DATE		
PREPARED BY	PRQ	5/20/71	GRAIN, PROPELLANT INHIBITED	REF DWG N/A
CHK'D BY				DWG TO BE CHG'D YES ☐ NO ☐
STRESS				NEW DWG REQ'D YES ☐ NO ☐
APP'D	PRQ	5/20/71	Thiokol SLATON DIVISION	SK- Nº 11721

NOT REPRODUCIBLE

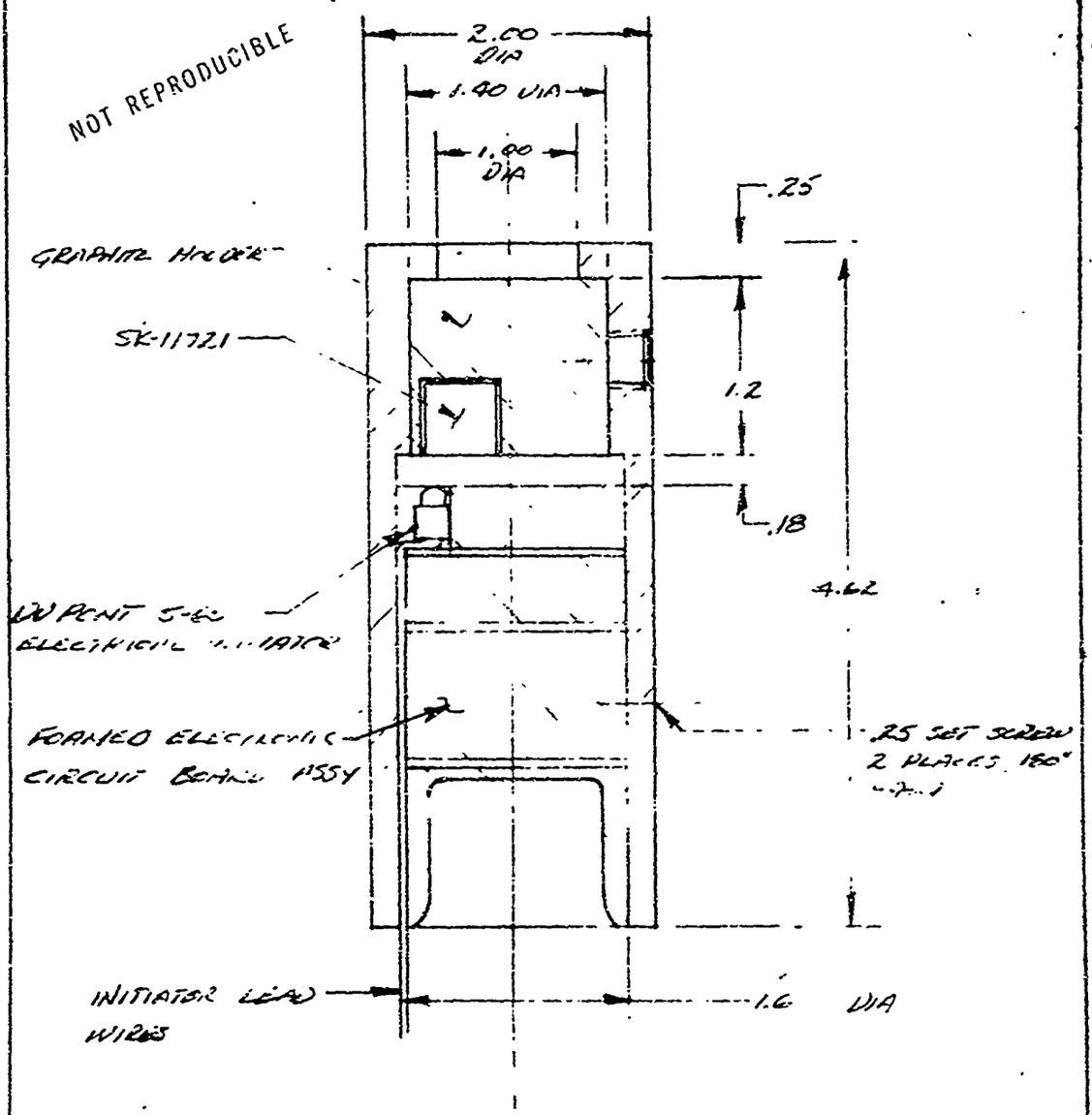

	INIT	DATE		
PREPARED BY	VZQ	5/20/71	TEST ARRANGEMENT	REF DWG N/A
CHK'D BY				DWG TO BE CHG'D YES/NO
STRESS				NEW DWG REQ'D YES/NO
APP'D	PRB	5/20/71	Thiokol ELKTON DIVISION	SK- No. 11722

NOT REPRODUCIBLE

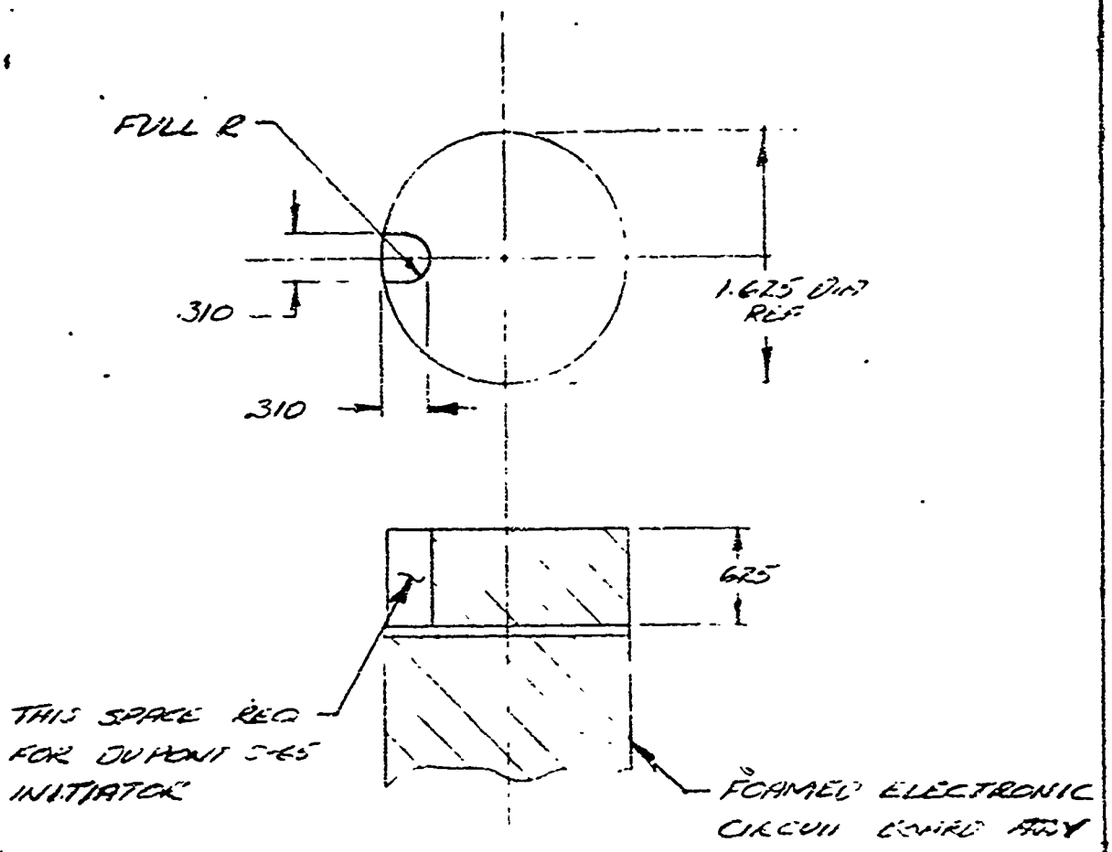

NOTE: INITIATOR WIRING DETAILS TO BE DETERMINED

	INIT	DATE		
PREPARED BY	VRG	5/20/71	SPACE ENVELOPE	REF DWG N/A
CHK'D BY				DWG TO BE CHG'D. YES ☐ NO
STRESS				NEW DWG REQ'D YES ☐ NO
APP'D	PRG	6/20/71	Thiokol ELKTON DIVISION	SK- Nº 11723

FIGURE 1

FIGURE 2

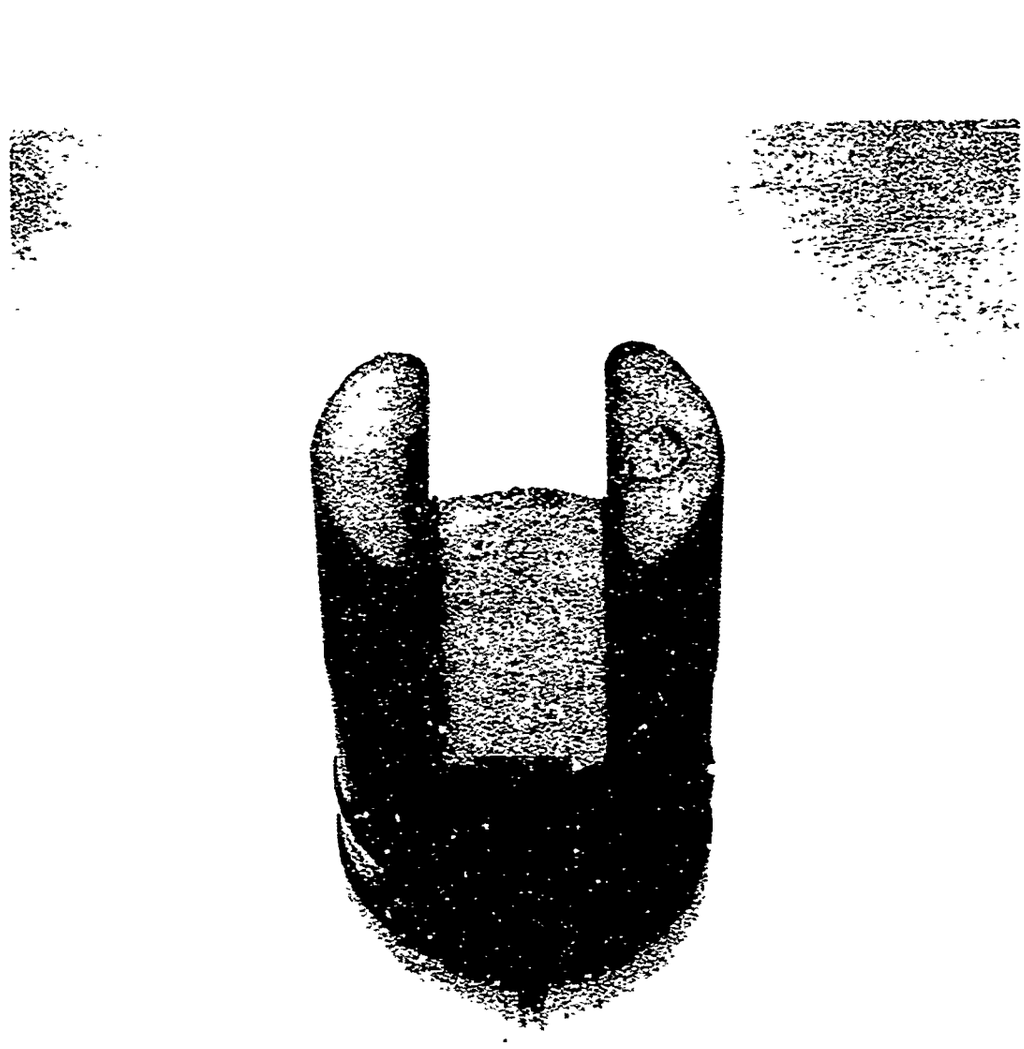

FIGURE 3

FIGURE 4

FIGURE 5