AD 733891

BRL CR 52

BRL

AD

CONTRACT REPORT NO. 52

AN INVESTIGATION OF TRANSIENT PHENOMENA IN DETONATIONS

Prepared by

University of Illinois
Urbana, Illinois

September 1971

DDC
RECEIVED
DEC 17 1971
C

Approved for public release; distribution unlimited.

U.S. ARMY ABERDEEN RESEARCH AND DEVELOPMENT CENTER
BALLISTIC RESEARCH LABORATORIES
ABERDEEN PROVING GROUND, MARYLAND

16

Unclassified
Security Classification

DOCUMENT CONTROL DATA - R & D

(Security classification of title, body of abstract and indexing annotation must be entered when the overall report is classified)

1. ORIGINATING ACTIVITY *(Corporate author)*
University of Illinois
Urbana, Illinois 61801

2a. REPORT SECURITY CLASSIFICATION
Unclassified

2b. GROUP

3. REPORT TITLE
AN INVESTIGATION OF TRANSIENT PHENOMENA IN DETONATIONS

4. DESCRIPTIVE NOTES *(Type of report and inclusive dates)*
BRL Contractor's Report (Jan 1970-Feb 1971)

5. AUTHOR(S) *(First name, middle initial, last name)*
Randall Jay Stiles

6. REPORT DATE
September 1971

7a. TOTAL NO. OF PAGES
76

7b. NO. OF REFS
29

8a. CONTRACT OR GRANT NO.
DAAD 05-70-C-0219

b. PROJECT NO.
RDT&E 1T061102A32B0100

c.

d.

9a. ORIGINATOR'S REPORT NUMBER(S)
BRL Contract Report No. 52

9b. OTHER REPORT NO(S) *(Any other numbers that may be assigned this report)*

10. DISTRIBUTION STATEMENT
Approved for public release; distribution unlimited.

11. SUPPLEMENTARY NOTES

12. SPONSORING MILITARY ACTIVITY
USA Aberdeen Research & Development Center
Ballistic Research Laboratories
Aberdeen Proving Ground, Maryland 21005

13. ABSTRACT

Studies of three transient situations in gaseous detonations were made. The transient phenomena were obtained by propagating a detonation across a contact surface artificially introduced into the shock tube. Transverse wave trajectories were obtained by smoked foil technique as functions of the gas compositions on either side of the contact surface. The mechanism of disappearance of transverse waves was found to be the same in all cases. Theory and experiment showed that the strength of a transverse wave was independent of the degree of asymmetry of the intersection. The asymmetric intersection is not necessary to cause decay of the wave system.

DD FORM 1 NOV 65 1473 REPLACES DD FORM 1473, 1 JAN 64, WHICH IS OBSOLETE FOR ARMY USE.

Unclassified
Security Classification

Destroy this report when it is no longer needed.
Do not return it to the originator.

Secondary distribution of this report by originating or sponsoring activity is prohibited.

Additional copies of this report may be purchased from the U.S. Department of Commerce, National Technical Information Service, Springfield, Virginia 22151

ACCESSION for

CFSTI WHITE SECTION ☑
DDC BUFF SECTION ☐
UNANNOUNCED ☐
JUSTIFICATION .....

BY .....
DISTRIBUTION/AVAILABILITY CODES

DIST.	AVAIL. and/or SPECIAL	
A		

The findings in this report are not to be construed as an official Department of the Army position, unless so designated by other authorized documents.

Unclassified

Security Classification

14. KEY WORDS	LINK A ROLE	LINK A WT	LINK B ROLE	LINK B WT	LINK C ROLE	LINK C WT
Gas Phase Detonation						
Transverse Wave Phenomena						
Shock Interactions in Reactive Flow						
Chemical and Gasdynamic Coupling						
Transient Effects						

Unclassified

Security Classification

B A L L I S T I C R E S E A R C H L A B O R A T O R I E S

BRL CONTRACT REPORT NO. 52

SEPTEMBER 1971

AN INVESTIGATION OF TRANSIENT PHENOMENA IN DETONATIONS

Randall Jay Stiles

Prepared By:

University of Illinois

Approved for public release; distribution unlimited.

Contract No. DAAD 05-70-C-0219
and
RDT&E Project No. 1T061102A32B0100

A B E R D E E N P R O V I N G G R O U N D, M A R Y L A N D

BALLISTIC RESEARCH LABORATORIES

BRL CONTRACT REPORT NO. 52

RJStiles
Aberdeen Proving Ground, Md.
September 1971

AN INVESTIGATION OF TRANSIENT PHENOMENA IN DETONATIONS

ABSTRACT

Studies of three transient situations in gaseous detonations were made. The transient phenomena were obtained by propagating a detonation across a contact surface artificially introduced into the shock tube. Transverse wave trajectories were obtained by smoked foil technique as functions of the gas compositions on either side of the contact surface. The mechanism of disappearance of transverse waves was found to be the same in all cases. Theory and experiment showed that the strength of a transverse wave was independent of the degree of asymmetry of the intersection. The asymmetric intersection is not necessary to cause decay of the wave system.

TABLE OF CONTENTS

	Page
INTRODUCTION	1
EXPERIMENTAL APPARATUS AND PROCEDURE	6
EXPERIMENTAL OBSERVATIONS	11
ANALYSIS	18
DATA REDUCTION	22
RESULTS OF THE ANALYSIS	25
CONCLUSIONS	29
FIGURES	34
REFERENCES	70

INTRODUCTION

An established detonation is a supersonic combustion phenomenon consisting of a region of exothermic chemical reaction following and sustained by shock compression heating of the previously undisturbed and unreacted medium. Detonation waves in gaseous mixtures were first observed experimentally by Bertholet and Vieille in 1881 but it has been only within the past 20 years that investigators have begun to understand the complexities of this phenomenon. Within 25 years after the discovery of detonations, the classical, one-dimensional, steady flow, Chapman[1] - Jouguet[2] (C.J.) theory for their existence had been developed. The C.J. model assumes that chemical reaction occurs instantaneously at the shock front and that the reaction products expand in a rarefaction wave following the shock front. Chapman and Jouguet independently postulated that the equilibrium state for a detonation wave should correspond to the simultaneous solution of the equations of Rankine[3] and Hugoniot[4] (equations of mass, momentum, and energy transport across the detonation) which yields the minimum mass flow. The validity of this theory could not be verified at the time of its development primarily because of the lack of thermodynamic data, but some years later it was shown that experimental detonation velocities agreed to within a few percent of those predicted by the C.J. theory. It has turned out that this good agreement was unfortunate for it led investigators to believe that the one-dimensional, steady flow model was a good representation of the physical process involved. More recent results have shown that this is definitely not the case.

In 1926, Campbell and Woodhead[5] first noted the existence of detonation waves which were clearly not one-dimensional. They were studying detonations in limit mixtures (a gas mixture under conditions near its limit of detonability) and observed a three dimensional spinning mode detonation

which followed a helical path as it propagatated in a circular tube. Until quite recently it was felt that the three-dimensional properties of these detonation waves were unique to detonations in limit mixtures.

The one-dimensional model was still held as valid in the years 1940 to 1945 when Zel'dovich[6], von Neumann[7], and Döring[8] (Z.N.D.) independently proposed a more detailed version of the classical model. In the Z.N.D. model, one can account for zones of relaxation, induction, and recombination following the shock wave by application of the conservation equations at these intermediate stages of the chemical reaction. This model predicts the existence of a von-Neuman pressure spike immediately behind the shock front and before the region of chemical reaction in a propagating detonation. Using high speed instrumentation developed during the Second World War, investigators attempted to experimentally observe the von Neuman spike but instead found that detonations contain a three-dimensional non-steady structure near the shock front. It was this discovery that finally cast doubt on the validity of the classical C.J. and Z.N.D. models.

One of the primary experimental methods for studying the structure of detonations is the smoke track technique. In 1875 Antilok[9] first used this technique while studying spark phenomena. He found that when a spark was discharged near the surface of a plate coated with an even layer of soot, impressions were left in the soot. Denisov and Troshin[10] were the first to use this experimental method in conjunction with the study of detonations. They attributed the characteristic writing patterns left in the soot after the passage of a detonation wave over it to "breaks" in the detonation front. More recently, Duff[11] has stated that the writing is caused by Mach interactions on the detonation front coupled

with transverse disturbances in the reaction zone behind the shock front. Using a laser schlieren apparatus, Oppenheim[12] has recently observed these Mach interactions in the process of writing on a soot covered glass plate. To date the smoke track technique and other optical methods have been used by many investigators in both round and rectangular tubes[11-24]. As a result of these studies we have at present a relatively clear understanding of the major structural details of detonations propagating in a number of different exothermic gaseous mixtures. In general, one finds that all self-sustaining detonations possess transverse pressure waves moving across the front of the propagating detonation wave as it moves into fresh gas. It is these transverse pressure waves which produce the traveling Mach stem shock configurations at the front. Optical observations by Voitsekhovski, Mitrofanov, and Topchian[21] (V.M.T.) have shown that these transverse disturbances extend well into the reaction zone of the detonation. This suggests a coupling between these waves and the reaction kinetics of the mixture. The transverse pressure waves generally appear with a definite spacing and amplitude (or strength). Biller[23] has defined the strength of a transverse wave as the dimensionless pressure rise across the wave measured at the lead shock. It has also been determined through experiment that the structure of a detonation is highly dependent on the initial composition and pressure of the exothermic gaseous mixture and that it may be affected by the cross sectional geometry of the detonation tube. With this background of knowledge of the structure of the detonation, the emphasis in recent years has been on obtaining a fundamental understanding of the detailed mechanisms at work in the propagating detonation wave.

In an attempt to provide a theoretical basis for the existence of transverse waves in self-sustaining detonations, and from experimental

evidence, investigators have analyzed the reaction zone behind the detonation front. Using an acoustic theory, based on a coupling between the transverse disturbances in the reaction zone and the standing acoustic modes of the detonation tube, Fay[25] and Manson[26] independently determined the helical trajectory of single-spin detonations. More recently, Strehlow and Fernandes[27] proposed a theoretical criterion for the development of transverse waves in detonations. In an extension of this theory, Barthel and Strehlow[28] have shown that a portion of a coherent acoustic wave front could become trapped in the reaction zone behind the shock front. The wave would then grow in amplitude and finally convolute yielding transverse acoustic waves with uniformly spaced multiple shock contact points. The theory also predicts that equilibrium contact spacings will be dependent upon the chemical kinetics of the reaction zone. In comparing results predicted by this theory and results obtained experimentally, Watson[22] and Maurer[18] find qualitative agreement. Although quantitatively the theoretical and experimental results differ by an order of magnitude, the acoustic theory predicts proper trends in the effects of pressure, dilution, and reaction zone coupling on transverse wave spacing. One should not expect quantitative agreement however in using an acoustic theory to deal with a finite amplitude phenomenon.

In the elementary theory for wave spacing it is contended that new transverse waves will develop linearly and spontaneously in a region between two waves which are too widely spaced in terms of the innate chemical requirement for spacing[29]. To derive experimental results related to this contention, one must perform transient experiments with detonation waves. Adamczyk[24] has recently conducted an experimental study of the effect

of perturbing an equilibrium detonation (a time average steady detonation with regularly repeatable structure) by passing it over ramps in the detonation tube. His results support the elementary theory for wave spacing.

In the present study, equilibrium detonations have been perturbed by passing them through a region of concentration gradients. Also a technique has been developed which allows us to use data from smoke foils along with theoretical calculations to predict transverse wave strengths at the intersection points of these transverse waves. By recording and analyzing the transient response of the detonation structure, we hope to learn more about the manner in which transverse wave strengths and spacings are established.

EXPERIMENTAL APPARATUS AND PROCEDURE

Vertical Detonation Tube

In order to study the transient behavior of detonations, we have found it convenient to construct a vertical, spark ignition detonation tube (Figure 1). The vertical configuration allows us to create a diffusional interface between two gaseous mixtures of different densities and detonative properties. The higher density mixture is fed into the bottom of the tube with the lower density mixture above it, thus preventing mixing due to buoyancy effects. The tube is approximately 42 feet long and begins with the ignition section at the spark plug. To create turbulence and thus promote the transition from flame to detonation, a baffle type device is located in this section. It consists of four 1/8 inch diameter rods extending three feet into the tube with circular steel plates welded to these rods at right angles to the main axis of the tube. The circular plates are spaced evenly along the rods. Flow around and through the plates is sufficiently turbulent to promote the establishment of a detonation. The baffle device is shown in Figure 2.

After proceeding 10 feet along the 2 inch I.D. steel pipe of the initiation section, there is a transition to 3 inch X 1-1/2 inch I.D. rectangular steel pipe. The transition section between these pipes is 8 inches long and simply makes a smooth transition between the two geometries. The detonation propagates another 10 feet in the rectangular steel pipe making two 90 degree turns at the top of the tube. After the second 90 degree turn, the detonation moves downward through the final 1 foot of rectangular steel pipe before it encounters the 3-1/4 inch X 1-1/2 inch I.D. extruded rectangular aluminum tube which extends 15 feet to the first test section. It is during its passage through this aluminum tubing that the structure of the detonation reaches the equilibrium configuration for the particular gaseous mixture in the top of the tube. The aluminum tubing is clad in 1/4 inch steel to prevent deformation due to the high pressure rise across the lead shock of the detonation front.

The final 7 feet of the tube consists of two test sections separated by a sliding valve. The valve is constructed so that sections above and below it and the hole in the slide may all be filled independently when it is in the closed position (Figure 3). When the valve is open, or in the firing position, the hole in the slide lines up with the test sections above and below it thus creating a straight 3-1/4 inch X 1-1/2 inch I.D. tube for the last 22 feet of the detonation's propagation. The test section above

the sliding valve (the "2 foot" test section shown in Figure 4a) provides an 18.5 inch smoked foil record for monitoring the structure of the detonation before it encounters the concentration interface. Below the sliding valve is the "5 foot" test section containing 55.5 inches of active smoke foil for recording the transient behavior of the detonation. Note that the smoke foils above and below the sliding valve are separated by approximately 7 inches and thus the first several inches of transient propagation will not be recorded (Figure 3). In both test sections, 3-1/4 inch diameter holes were cut in the back wall (opposite the cover plate) to accommodate models (Figure 4b). Two of these holes were cut in the large test section while just one was cut in the "2 foot" section. Models, which perturb the detonation by mechanical means, have been used in the past for studying transient behavior in detonations[24] but were not used in this study. Thus the holes were plugged and the back surface of the test sections was smooth.

For ignition of the test gas, an aircraft type spark plug was used. The electrical energy was supplied by discharging a 100 microfarad capacitor charged to 270 volts through the primary of a 12 volt automotive ignition coil.

Smoked Foil Technique

Data were recorded on .005 inch thick mylar sheets. The test section cover plate is first coated with a thin layer of silicone vacuum grease which is subsequently pressed out between the mylar sheet and the cover plate. This process securely fixes the mylar sheet to the test section cover plate. Before smoking the mylar surface, it must be thoroughly cleaned with acetone to assure

the removal of all grease. Next the mylar surface is evenly coated with soot from a burning tongue depressor. Care should be taken not to hold the flame of the tongue depresser too close to the mylar as it will scorch and will yield very poor quality smoke foils.

Filling and Firing Procedure

Once the test section cover plates are prepared with smoked foils and bolted in place, the tube is vacuum sealed and is evacuated to a level of about 200 microns of pressure. Gas mixtures for the experiments are made from commerically bottled gas and are prepared at least two hours prior to firing the tube to insure thorough mixing. For filling, the sliding valve is moved to the closed position and then the two gas mixtures of interest are injected simultaneously into the top and bottom of the tube through the two filling ports in the body of the slide (Figure 3). The pressure in both sections is monitored independently by two pressure gauges. After the final pressure is reached on both gauges, an external connection of the two fill lines is opened thus exactly equilibriating the pressures above and below the sliding valve. Any pressure difference would of course, cause mixing when the valve was returned to the open position. The 3-1/4 inch X 1-1/2 inch hole in the brass slide is filled at the same time and with the same gas as the top of the tube. With the pressures equilibriated, the sliding valve is opened and then after waiting a short time (usually 1 to 2 minutes) the tube is fired with the activation of the spark source.

For the case when the pressure of interest is near the limit pressure (lowest pressure at which a particular gas mixture will ignite and form a detonation front rather than a flame) it is sometimes necessary to "boost" the detonation with the ignition of a mixture with high burning velocity. To accomplish this, the tube is filled to about 80% of the desired pressure

by the procedure described previously. The sliding valve is then opened. Finally, a stoichiometric mixture whose density is greater than that in the top of the tube is added at the filling port next to the spark plug until the final pressure is reached. This stoichiometric mixture is the booster. When the final pressure is reached, the tube is sealed and fired in the usual manner.

After firing, the tube is vented to the atmosphere and the test section cover plates are removed. The smoked mylar sheets, now showing the structure of the detonation, are sprayed with a clear lacquer to preserve the record.

EXPERIMENTAL OBSERVATIONS

Before discussing the experimental observations, it will be helpful to define several terms. In a rectangular detonation tube the detonation's structure is three-dimensional but smoke foil records show only two dimensions. We say that transverse waves propagating across the wide dimension of the rectangular tube are in the main mode. It is these transverse waves which write on the smoke foil. However, there is also a second set of transverse waves which propagate across the narrow dimension of the tube as the detonation progresses. We say that these waves are in the minor or "slapping" mode. Wall intersections of the slapping mode are seen on smoke foils as horizontal lines. Mode number is defined as the number of transverse waves in the mode of interest (i.e. if we count 4 transverse waves across the wide dimension of the tube, we say that the main mode number is 4). A second definition of interest is cell length. The transverse waves traveling in opposite directions intersect producing "cells" which are approximately diamond shaped. Cell length is the distance from tip to tip of one of these cells measured in the direction of the detonation's propagation (Figure 5).

We know that the structure of a detonation is highly dependent upon the initial pressure of the gaseous mixture. Adamczyk[24] has shown the variation of main mode number with pressure for a particular gas composition and tube geometry. It is of interest to

reproduce his results here (Figure 6). Note that for some pressure levels there are two mode numbers which may occur. This overlap is explained as a coupling between the structure of the detonation and the tube geometry. As pressure is changed the chemistry of the system dictates a change in mode number but at certain points it may be overruled by the coupling effect. The point of this discussion is that in transient experiments based on composition gradients, the chemistry of the mixtures alone does not dictate structure. Acoustic coupling with the detonation tube also has an effect. Ideally, one should pick gas mixtures and pressure levels so that desired mode numbers have a high probability of occurrence. At the time of this study there were insufficient data on the seven combinations of gas mixtures used for the kind of matching mentioned above. The results of a survey of the hydrogen-oxygen-argon system currently being conducted in this laboratory should be useful for future experiments.

With the proper choice of test gases, the vertical detonation tube can be used to produce a variety of different transient experiments. In this study, the experiments were based on three distinct transient processes. The effects on detonation structure and the test gases used in each of the three cases are presented in the following table.

Table 1

Exp. No.	Test Gas A (Top)	Test Gas B (Bottom)	Effect on Detonation Structure
1	$(2H_2+O_2)$ + 50% AR	$(2H_2+O_2)$ + 70% AR	The system loses waves - Structure increases in size
2	$(2H_2+O_2)$ + 40% AR	$(2H_2+O_2)$ + 70% AR	
3	$(2H_2+O_2)$ + 50% AR	$(2C_2H_2+SO_2)$ + 70% AR	The system gains waves - Structure decreases in size
4	$(2H_2+O_2)$ + 70% He	$(2H_2+O_2)$ + 60% He	
5	$(2H_2+O_2)$ + 70% He	$(2H_2+O_2)$ + 65% He	
6	$(2H_2+O_2)$ + 70% He	30% AR + 70% He	Transverse waves decay in the inert gas - Structure disappears
7	$(2H_2+O_2)$ + 50% AR	100% AR	

Notice from this table that the test gas in the bottom of the tube always has a higher molecular weight. This is necessary for proper operation of the vertical tube.

For each of the seven experiments, the detonation tube was fired from ten to twenty times. The pressure level was adjusted in the initial shots until the equilibrium structure before the diffusional interface was regular and had the proper mode number. No trouble was encountered with the acoustic coupling discussed in the beginning of this section. At a fixed pressure level, the results on the smoke foils were in general quite reproducable. We shall now discuss experimental observations made for each of the seven experiments listed above.

1. $(2H_2 + O_2)$ + 50% AR: $(2H_2 + O_2)$ + 70% AR

This combination was fired at 65 mm of pressure and made a transition from a 3 X 6 mode before the interface to a 2 X 4 mode after it (Figure 7). Thus in the transient process, two waves were lost from the main mode and one was lost from the slapping mode. Recall that only the paths of the transverse waves in the main mode are recorded on the smoke foil and that wall intersections of the slapping mode appear as horizontal lines. The first noticeable change on the smoke foil is that the wave spacing becomes uneven. This is particularly apparent at about the 22 inch mark in Figure 7. Looking at the two waves which disappear, we see that both moved closer to the waves they followed and away from the waves which followed them. When the distance between the decaying waves and the waves they were moving away from became about three times greater than that between the decaying waves and the waves they were approaching, the decaying waves stopped writing on the smoke foil. The three waves that disappear did not disappear simultaneously but disappeared at different times. The incomplete impression left by the wall intersection of the slapping wave at the 34 inch mark is an indication that it has decayed. The second wave disappears at the 41 inch mark and the third at the 49 inch mark. Notice that the points where the waves stopped writing are evenly spaced along the length of the tube.

To confirm the fact that transverse waves disappear from the slapping mode in the same way as they disappear from the main mode, a smoke foil was taken along the edge of the test section on a later shot. The results are shown in Figure 8. Note that the wave disappears through the same mechanism as in the main mode.

2. $(2H_2 + O_2)$ + 40% AR: $(2H_2 + O_2)$ + 70% AR

In order to study the decay of more waves in one transition we reduced the dilution of argon in the top gaseous mixture. This produces a smaller structure (more waves) than a 50% argon diluted mixture at the same pressure. Firing the tube at a pressure of 60 mm we saw a transition from a 3 X 7 mode to a 2 X 4 mode. Thus, in this case 3 waves decayed from the main mode. Again, the waves that decayed changed their relative spacing just as before and they disappeared one after another with their points of disappearance spaced fairly evenly along the length of the tube.

3. $(2H_2 + O_2)$ + 50% AR: $(2C_2H_2 + 5O_2)$ + 70% AR

Our purpose with this combination was to make a transition from large structure to small and thus to generate new waves in the system. Stoichiometric acetylene-oxygen diluted with argon is known to have small but regular structure. The results were rather disappointing however. Allowing the usual 1 to 2 minutes after opening the sliding valve for diffusion and for any motion of the gases to stop, we found that the transition occurred very rapidly in the vicinity of the sliding valve where there was no smoke foil. If the gases were allowed to diffuse for about ten minutes a transition could be seen on the top smoke foil (Figure 9). Due to the complexities of the multicomponent diffusion problem, the mixture composition where transition occurs is unknown.

4. $(2H_2 + O_2)$ + 70% He: $(2H_2 + O_2)$ + 60% He

Because wave spacing increases with the dilution of a gas mixture with an inert gas, and because the molecular weight of helium is less than that of a stoichiometric hydrogen-oxygen mixture, this combination of gases worked quite well in producing new transverse waves. The mixture

was fired at a pressure of 140 mm and from Figure 10 we see that a transformation is made from a 2 X 4 mode to a 4 X 8 mode. The structure proceeds to the 12 inch mark with little apparent change. However, between the 12 and 18 inch marks, the intersections become very unusual (Figure 11). Approaching an intersection, the triple point trajectories are usually curved and concave to an observer inside the cell, but notice in Figure 11 that the trajectories first become straight lines and then convex curves. The behavior of the transverse waves after the intersection is also unusual. The angle α becomes quite small and the wave trajectories curve drastically. Looking at the 24 inch mark we see that each of the original waves appears to have become two new waves. These eight waves then adjust and become more regular as they progress along the foil. It is also interesting to note that $(2H_2 + O_2)$ + 60% He does not ordinarily support eight waves in the main mode. Firing this gas alone in the vertical tube produces a sixth mode structure. Another interesting detail of the structure are the inverted "vee's" which follow some of the intersections. Notice that these vee's appear only if the slapping wave strikes in the first half of the cell containing them. Also note that farther along the smoke foil after the original waves have broken up to form the new set, the vee's no longer appear.

5. $(2H_2 + O_2)$ + 70% He: $(2H_2 + O_2)$ + 65% He

Our next thought was that in order to study the early transient behavior seen in the previous case, we could reduce the transition driving force and perhaps spread the early behavior out over a longer period of time. Firing into this mixture, we found that the 4X structure presisted for the entire length of the bottom smoke foil (Figure 12). Little change

in structure can be seen but the vee's are again present and the triple point trajectories approaching an intersection are relatively straight lines. Notice the extreme regularity with which the slapping mode intersects the main mode in this foil.

Next we tried $(2H_2 + O_2)$ + 63% He in the bottom of the tube hoping to produce a transition. Again, firing the mixture at 140 mm produced a 4X structure along the entire length of the tube. However, if the mixture was fired at 150 mm of pressure, transition to an 8X structure was again made and in the same manner as observed in experiment number four.

6. $(2H_2 + O_2)$ + 70% He: 30% AR + 70% He

This experiment was concerned with the decay of transverse waves in an inert gas. The mixture was fired at 140 mm of pressure producing an equilibrium 2 X 4 structure before the diffusional interface (Figure 13). In the inert gas, the triple point paths become straight lines as the detonation progresses. Writing on the smoke foil gradually becomes lighter until near the 40 inch marks where the triple point paths are barely visible. It was found that as the initial pressure of the detonative mixture was increased, the distance along the detonation tube to the point where writing ceased also increased.

7. $(2H_2 + O_2)$ + 50% AR: 100% AR

Similar behavior was observed for this combination as in the previous experiment. However, the smoke foil records were not as clear and hence are not shown here.

ANALYSIS

Eyman[17] has presented an analysis of the intersection of two transverse waves of equal strength (i.e. a symmetric intersection). The analysis presented here is an extension of his work to include intersections of waves of unequal strength. The geometry of these intersections is asymmetric. First, let us consider the assumptions involved in this model. Figure 14 shows the structure of the intersection model for two times--one just before and one just after the intersection.

Assumptions

1. The intersection can be modeled as a two-dimensional phenomenon. Thus the detonation is assumed to be planar.
2. Near the triple point of the Mach stem configurations the shock segments are straight lines and have constant velocities.
3. Shock polars may be used to solve for the Mach stem configurations.
4. The orientation and Mach number of MS_1 and I_3 are identical as are those of MS_2 and I_4 (Figure 14).
5. The effects of chemical reactions can be ignored.
6. The gases are ideal but shock polars must be constructed using the JANAF tables.

Method of Calculation

On the basis of the above assumptions, a Fortran computer code was developed which would calculate the entire intersection geometry, the strength of the four transverse waves involved, and all properties of the four Mach stem configurations for any gas mixture, pressure, temperature, and degree of asymmetry. A modified version of a program written by

Strehlow was used as a subroutine for the calculation of Mach stem properties. Given the Mach number of the incident shock and the angle between the incident shock and the incoming flow (the angle β), the subroutine calculates the configuration and all properties of the Mach stem. The Mach number of the incident shock approaching the intersection was taken as 85% of the C.J. Mach number for the particular mixture considered. In view of results obtained by Steel[20] and Eyman[17] this is a reasonable estimate near the point of intersection. The entrance angle Φ was chosen in the range from 60° to 80° as this corresponds to experimentally observed values. The first step in the calculation was to choose values of Φ, β_1, and β_2. Note from Figure 5 that they must sum to 180°. After choosing Φ (in the range from 60° to 80°) the choice of β_1 and β_2 is arbitrary as long as the values of β yield a Mach stem solution. As the difference in β_1 and β_2 increases, the intersection becomes more asymmetric. Having established values for β_1 and β_2, and with the assumed value of incident shock Mach number, one can calculate the properties of the two Mach stems which occur prior to the intersection. Using these results and assumption number 4 above, the relative orientation and Mach numbers of I_3 and I_4 are known. The iteration scheme used to converge on the correct answer is based on the fact that for any intersection, MS_3 and MS_4 must have the same orientation and Mach number. Picking β_3 arbitrarily allows us to calculate the properties of Mach stem number 3, in particular the orientation and Mach number of MS_3. We now iterate on β_4 until the orientation of MS_4 matches that of MS_3. At this point the Mach numbers of MS_3 and MS_4 are checked. If they do not agree, β_3 is changed in the proper direction and the iteration loop continues until MS_3 and MS_4 lie along the same line and have the same Mach number.

Results of Calculations

The intersection program was constructed so that experimental values of ψ_1, ψ_2, and Φ could be used along with the calculated data to predict strengths of the transverse waves for asymmetric (or symmetric) intersections. Working graphs resulting from the theoretical calculations are shown in Figures 15 and 16. Figure 15 is a plot of ψ_1 vs. ψ_2 with Φ as the parameter for a particular gaseous mixture, incident Mach number and initial pressure. Note that ψ_1 is assumed to be the smaller of the two angles ψ and that $\psi_1 = \psi_2$ corresponds to symmetric intersections. Figure 16 is a plot of the angles ψ versus strengths of the two transverse waves before the intersection for the same conditions as in Figure 15. Again the $\psi_1 = \psi_2$, $S_1 = S_2$ line corresponds to symmetric intersections. Note that as ψ increases for a given Φ, the strength of the transverse wave decreases. Therefore, in an asymmetric intersection, the wave which is deflected most at the point of intersection is the weaker of the two waves.

In dealing with symmetric intersections, Eyman found his results to be quite insensitive to the Mach number of the incident shock and the degree of inert gas dilution of the combustible mixture. This same lack of sensitivity is also true of asymmetric intersections as is shown in Figures 17, 18, 19, and 20. Our experimental measurement of Φ, ψ_1, and ψ_2 is over determined in the sense that three items are measured to determine two transverse wave strengths. The lack of sensitivity of Φ to the incident shock Mach number prevents us from using it to determine the incident Mach number. This is fortunate in one sense however, for as a result, even a relatively large error in the assumed value of incident Mach number will have a small effect on the results of the calculation.

Prior to the intersection of two transverse waves, the lead shock of the detonation front between these waves is the incident shock. After the intersection the shock between the transverse waves is the Mach stem shock whose velocity is somewhat higher than that of the incident shock. Biller[23] has stated that the shock front velocity makes a discontinuous "jump" increase from about 80% of the CJ velocity to about 120% of the CJ velocity at the point of intersection. This result remains valid for asymmetric intersections.

Another interesting and useful result of the calculations is that along a particular wave β increases slightly (not more than one degree) as it passes through the point of intersection. Thus in Figure 14, β_4 is slightly greater than β_1 and β_3 is slightly greater than β_2. Also the strength of a particular transverse wave decreases very slightly (one percent or less) after an intersection. Both of the above results are true for any degree of asymmetry.

DATA REDUCTION

Our purpose is to determine the strength of transverse waves by using the structure left on smoke foils after the passage of detonation waves over them. The vertical detonation tube provides us with a 2 foot record of the equilibrium structure of the detonation prior to its encountering the diffusional interface. Then the transient response is recorded on the 5 foot smoke foil following the interface. In the previous section we showed that knowing the angles ψ_1, ψ_2, and Φ, we could determine the strengths of the transverse waves prior to the intersection. Therefore, these three angles were measured for each intersection on those smoke foils which were reduced (Figure 21). The numbering system shown in Figure 22 was found to be convenient for labeling waves and intersections. Notice that intersections are identified by the numbers of the intersecting waves. Wall intersections were assumed to be symmetric and thus the angle $\Phi/2$ was measured as the angle between the triple point trajectory and the wall. It is possible to measure this angle since bolting the cover plate onto the test section leaves an impression showing the position of the test section wall on the smoke foil.

The plot of ψ_1 versus ψ_2 with Φ as the parameter (Figure 15) is used as a check on the accuracy of measurement of the angles and also to provide consistency between measured quantities and theoretical calculations. Suppose, for example, that our measured results are: $\Phi = 70°$, $\psi_1 = 20°$, $\psi_2 = 35°$. From Figure 15 we note that these measurements are not consistent with theoretical calculations. We assume

that in the neighborhood of the intersection (where the angles are measured) the assumptions of our analyses are valid. Therefore, inconsistency between measured and calculated angles indicates errors in reading angles. We must now decide which angle or angles should be changed. Of the three angles which are measured, Φ can be measured the most accurately. This is because the radius of curvature of the triple point path is greater before than after the intersection and it is much easier to find tangents of curves of large radius of curvature. Since the Φ measurement is the best of the three angles, it should not be changed. Also, we cannot assume that either of the angles ψ is more accurate than the other. It is more likely that their relative magnitudes are nearly correct since they were measured at the same time. Thus we conclude that the best adjustment is to assume that Φ is correct and then to change the values of both angles ψ_1 and ψ_2 in the same direction, keeping their relative magnitudes nearly the same. In general, the required adjustment on ψ_1 and ψ_2 is less than 3 degrees. Once Φ ,ψ_1 and ψ_2 have been established and are consistent with theoretical calculations, Figure 16 is used to determine the strengths of the transverse waves.

We have mentioned previously that wall intersections are assumed to be symmetric. Thus $\Phi/2$ is measured on the smoke foil. Since the measured angle must be doubled to yield the correct value of Φ, any error in measurement is also doubled. To keep the accuracy of measurement of wall angles consistent with the rest of the measurements, the smoke foils were enlarged for reading the wall intersection angles.

Assuming that ψ_1 and ψ_2 are measured and adjusted to an accuracy of $\pm$ 1.5°, the corresponding strengths can vary as much as one tenth. Admittedly, this error is rather severe but since all data were recorded and reduced by one investigator, errors should be consistent. Therefore, proper trends (if not proper magnitudes) of strengths should be shown in the results.

It has been noted in the past and also by this investigator that when the slapping mode of the detonation intersects the main mode slightly before the point of intersection of two transverse waves in the main mode, the angle Φ becomes distorted and quite large (Figure 23). Intersections with Φ greater than 80° were generally of this type and were not reduced.

RESULTS OF THE ANALYSIS

To get meaningful results from a smoke foil record, the structure on it must be fairly regular and the writing patterns must be clear. It is quite difficult to obtain a good, five foot long smoke foil due to the artistry involved in the smoking process. Smoke foil records from four of the seven experiments performed have been reduced. These smoke foils (Figures 7, 10, 12, and 13) are the best that were obtained from the ten to twenty shots in each experiment. In general, over 90% of the intersections were clear enough to be reduced. Structures of low mode numbers are also desirable for analysis purposes due to the large number of angles that must be read and the bookkeeping problems which arise as the mode number increases. We shall discuss each of the four records separately in the following paragraphs.

1. $(2H_2 + O_2)$ + 50% AR: $(2H_2 + O_2)$ + 70% AR

In the experimental observations section we discussed how the two waves that failed moved closer to the waves they were following and farther from the waves they followed. Figure 24 is a plot of the x,y location of wave intersections where wall intersections are "unfolded" or treated like mirror reflections. This figure shows the relative movement of all the waves as the detonation propagates down the tube. Figures 25 and 26 are plots of strength as a function of x for two waves: wave number 4 which did fail, and wave number 5 which did not fail. Note that strength oscillates severely in both cases and that one cannot predict that wave number 4 will fail by looking at its early behavior. Also notice that at failure, wave number 4's strength decays quite rapidly (in three cell lengths). Figure 27 is a plot of the strength of the centerline intersections versus x. The oscillation is less severe in this case, particularly from the 16 inch mark on and most intersections are symmetric or nearly so. Figure 28 is a plot of the strength of the wall intersections versus x.

There is a phase change noticeable on this plot (i.e. out of phase, in phase, out of phase, in phase). This suggests that a higher mode of low amplitude oscillation is present at the detonation front as it propagates. Also note that there is a general decrease in strength along this plot. Figure 29 is a strength versus x plot for wave numbers 2 and 5. Note that the strengths follow one another reasonable well. The same sort of following behavior was found for the wave pairs 1 and 4 and 3 and 6.

2. $(2H_2 + O_2)$ + 70% He: $(2H_2 + O_2)$ + 60% He

This foil was reduced only up to the 22 inch mark because after that the structure becomes too irregular to be suitable for analysis. It was hoped that something of interest might be revealed in the early transient behavior of the detonation. The strength versus x plots for all four waves were quite similar. Figure 30 is such a plot for wave numbers 1 and 3. Note that the strength oscillates regularly up to the point where the unusual structure occurs (near the 12 inch mark of Figure 10). From there the strength decreases to a quite low value at about the 17 inch mark but increases again after that. In Figure 10 we see that a new cell appears (faintly) near the 14-1/2 inch mark. The strength of existing waves must be used in creating this new cell because the sharp decrease in strength of these waves takes place simultaneously with the generation of the new waves.

3. $(2H_2 + O_2)$ + 70% He: $(2H_2 + O_2)$ + 65% He

In the experimental observations section we mentioned that after the 18 inch mark of Figure 12, the structure for this record becomes very regular. This figure shows that the intersections of the slapping mode with the main mode occur at the same cell position each time. Also note that these intersections are quite close to the intersections of transverse waves in the main mode. Evidence from past studies has shown that this

situation increases the angle Φ. From our theoretical work we realize that increasing Φ increases the strength of both transverse waves involved in the intersection. Plots of strength versus X for this combination of gases has shown that indeed the slapping wave intersections with the main mode can increase the strength of the transverse waves. Figure 31 is a plot of strength versus X for wave number 1. Note that from the 12 inch mark on, the strength apparently undergoes a pure oscillation about a line drawn through a strength of approximately 0.575. Figure 32 is a strength versus X plot for two waves: numbers 1 and 3. Note that the strengths follow each other very closely except for the first few inches of the plot. It is in this region where the cell length of the structure is decreasing rapidly. We found that the strengths versus X plots of all four waves followed one another quite closely in this system. Figure 33 is a plot of strengths of the centerline intersections as a function of X. Note that there is little variation in strength in this plot. The wall intersections also have nearly constant strengths (Figure 34). Referring to Figure 12 we see that both the centerline and the wall intersections are not affected by the slapping mode intersections with the main mode. Thus, it appears that the slapping mode is the primary cause of the severe oscillatory behavior in the strength of the transverse waves and that when perturbed by the slapping mode, a transverse wave in the main mode simply oscillates around an average strength. The final observation made from Figures 33 and 34 is that wall intersections are consistently of higher strength than the centerline intersections.

4. $(2H_2 + O_2)$ + 70% He: 30% AR + 70% He

Our primary interest in this experiment was to determine the rate of decay for a transverse wave as it passed into an unreactive gas. Figure 35 a

shows the strength versus x curve for wave number 1. Assuming an exponential decay in the strength of the wave we plot natural log of strength versus x and fit a straight line through these points. The plot is shown in Figure 36. Assuming an average cell length of 1.52 inches for this gaseous mixture we find that the decay rate is about 7 percent per cell length. The other three waves in the system exhibited a similar decay behavior. It is interesting to note that the rate of decay of the waves in experiment number 1 was much faster than that in an inert gas. Thus it appears that the waves in experiment number 1 were forced to decay.

CONCLUSIONS

We shall break our conclusions up into two categories: conclusions from the theoretical treatment of an asymmetric intersection and conclusions from experiment and analysis. As is often the case for new experimental techniques (the vertical detonation tube), some of the results derived in the transient experiments are still unexplained. Our purpose in this section is to reiterate observations of interest and to provide explanations when possible.

Conclusions From the Theory

The assumptions made in the theoretical treatment of asymmetric intersections are all reasonable and therefore we expect our results to be an accurate representation of the physical process. Perhaps the most interesting result is the fact that the strength of a particular transverse wave decreases less than one percent as it passes through an intersection regardless of the degree of asymmetry of the intersection. Since the measured decay rates for transverse waves in an inert gas are far greater than this, we can conclude that the asymmetric intersection itself is not the mechanism for wave decay. We have also confirmed the fact that the incident shock velocity "jumps" at the intersection from about 80% to 120% of the C.J. veloctiy. This result is again true for any degree of asymmetry and is a function of the entrance angle Φ. Finally, we have shown that the intersection geometry is only slightly dependent on the incident shock Mach number and the amount of inert gas dilution for any degree of asymmetry. Thus,

experimental measurement of the entrance angle Φ cannot be used to determine the incident shock Mach number.

Conclusions From Experiment and Analysis

In this study we have observed three unique transient situations. In the first, the established, equilibrium detonation encountered fresh gas which normally supports fewer transverse waves than the gas before the diffusional interface. Therefore, waves are lost as the detonation progresses into the fresh gas. In all smoke foil records of this process which have been taken to date, the mechanism for disappearance of the waves is apparently the same. In all cases the decaying wave moves closer to the wave it is following and farther from the wave that follows it. This change in the relative spacing of the waves occurs quite gradually and is readily apparent on the smoke foil records. It is interesting to note that strength versus distance plots made for the decaying waves do not show a gradual decrease in strength corresponding to the slow change in spacing. In fact the S versus x plots of decaying waves show no indication of wave failure until very close (i.e. 4 or 5 intersections before) to the point where writing ceases on the smoke foil. Also the rate of wave decay observed in this process is much more rapid than the decay of a transverse wave progressing into an inert gas. We conclude from this that in this first transient situation there is a driving force causing the rapid wave decay rates. We have also found that waves do not disappear simultaneously but at different times and that the points of wave disappearance are generally evenly spaced along the length of the tube. Smoke foils of the slapping mode have shown that the mechanism for wave disappearance in this mode is the same as that in the main mode.

In the second transient situation, waves were generated as the equilibrium detonation encountered the new gaseous mixture at the diffusional interface. It was found that for each of the transverse waves in the original equilibrium detonation, one new wave was generated even if the new gas does not normally support that many waves. As the new collection of waves progresses down the tube, their spacing becomes more regular. We assume that some of these waves would eventually decay so that the final structure would match that of a normal equilibrium detonation in the bottom gaseous mixture. This decay was not seen in the 5 foot smoke foil records taken in this experiment however. We can conclude from these observations that under certain circumstances a particular gaseous mixture can support a higher mode number than it normally would support for a given initial pressure. This result is in agreement with conclusions drawn by Adamczyk. Recall from the experimental observations section that if the amount of inert gas dilution was changed from 60% to 65%, the transition from the 4X to the 8X structure in the main mode did not take place within the 5 foot length of the smoke foil for any of the initial pressures that we studied. However, for 63% dilution, transition did not occur for 140 mm of pressure but did occur for 150 mm of pressure. This implies that the transition is dependent upon reaction rates. We hesitate to draw too many conclusions from these observations primarily due to the small number of records taken and the probability factor involved in the occurrence of a particular mode for a given pressure. We do feel though that there is a "threshold" which the detonation must reach before new waves can be produced. Strength versus distance plots for this experiment showed a marked decrease in the strength of the original transverse waves at the point where the new waves were first visible.

Therefore, energy must be transferred from the old waves to the new ones as the new waves are created.

In the third transient situation, the transverse waves simply decayed as they moved into an inert gas. As soon as the detonation propagates into the inert gas it becomes a simple shock wave. However, the transverse wave trajectories still propagate across the front for some distance. Eventually, the trajectories become straight lines and finally stop writing on the smoke foil. Analysis showed that wave decay rates in the inert gas were of the order of 7% per cell length.

The strength versus distance plots in all three of the transient situations showed that in a rectangular detonation tube, the strength of transverse waves is oscillatory about an average value. Also, the regularity of the slapping wave collisions with waves in the main mode appears to be directly related to the regularity of the strength oscillations. In experiment number 4, slapping wave intersections with the main mode often appear to be the origin of new waves, but from the above results we suspect that the slapping wave intersections have momentarily strengthened the new waves in the main mode enough so that they write on the smoke foil and therefore appear to emanate from the slapping wave intersections. In experiment number 5, center-line and wall intersections were not affected by the slapping wave. Strength versus distance plots for these intersections were essentially not oscillatory (to the degree of experimental accuracy) and therefore we conclude that the slapping mode merely perturbs the strength of the waves in the main mode causing them to oscillate about some average value. Since planar detonations have been seen experimentally[18], we also conclude that the oscillations in strength are not required for the self-sustenance of detonations.

Another result found from all the smoke foils that have been reduced to date is that wall intersections are stronger than centerline intersections. We suspect that this is due to a boundary layer effect behind the incident shock of the detonation front but are not able to provide a detailed explanation for this observation at this time.

We hope that this study will provide a useful background for future transient experiments. Careful experimentation with the transient situations discussed in this report should yield valuable information about details of the transverse wave mechanisms involved in self-sustaining detonations.

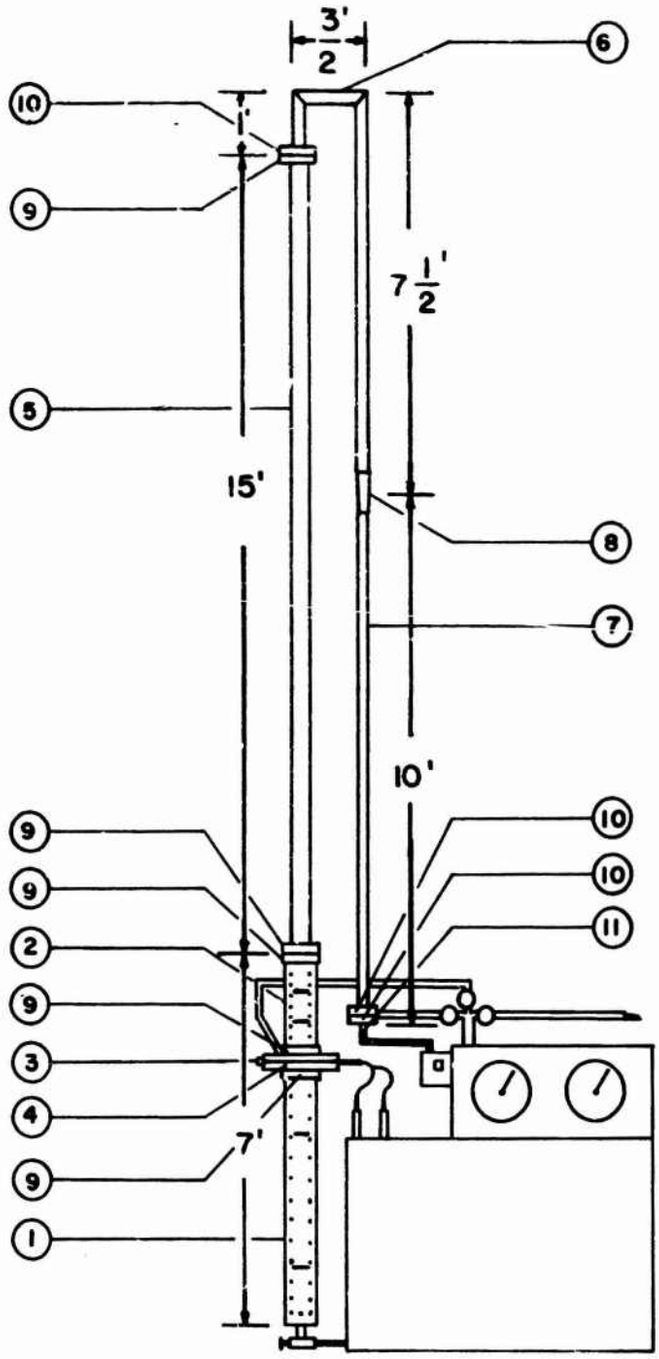

Vertical Detonation Tube

FIGURE 1

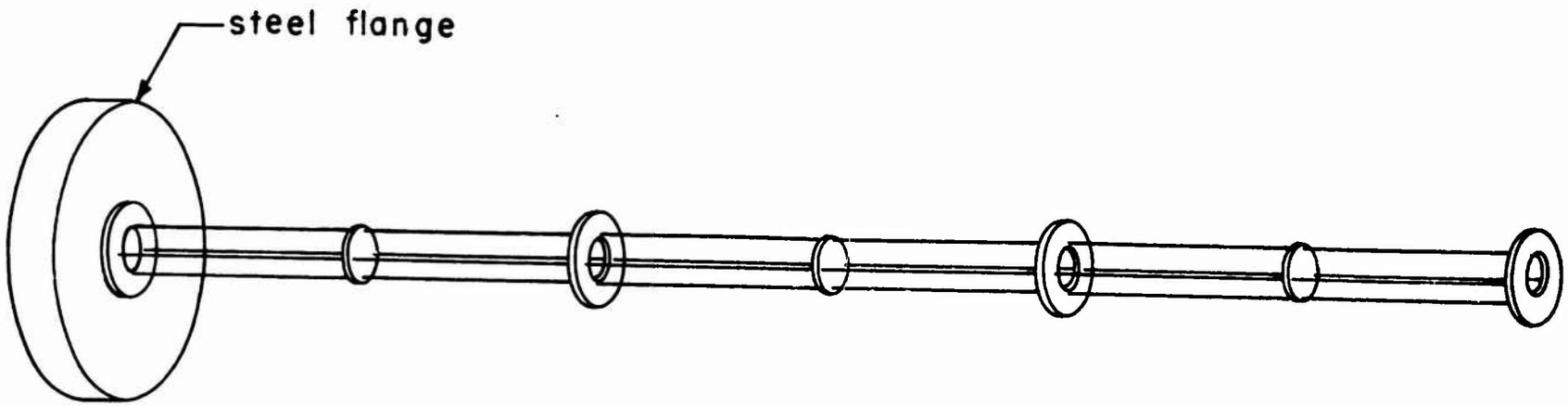

FIGURE 2 BAFFLE DEVICE

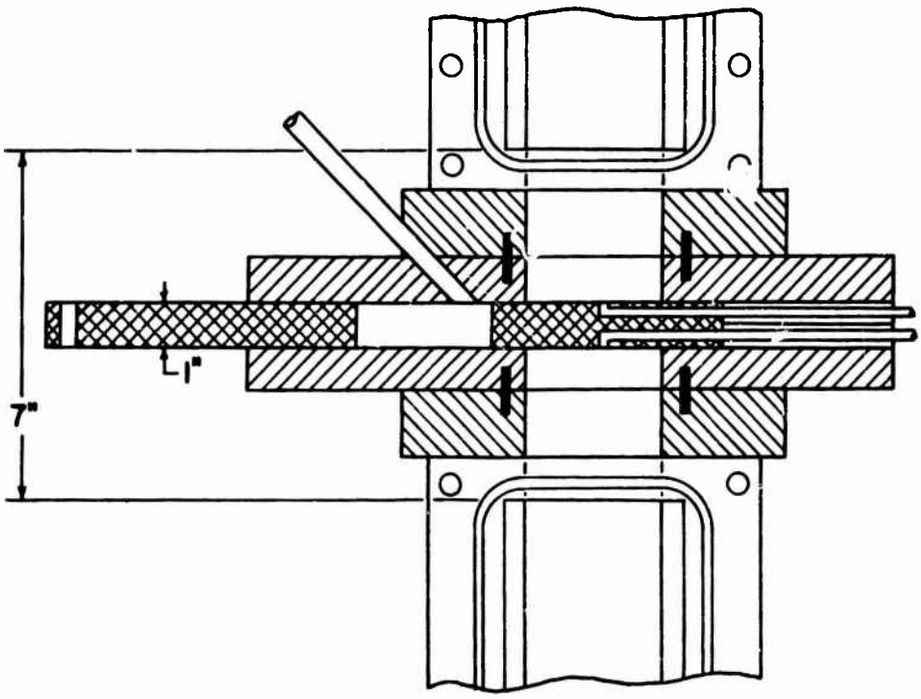

Filling Position (Closed)

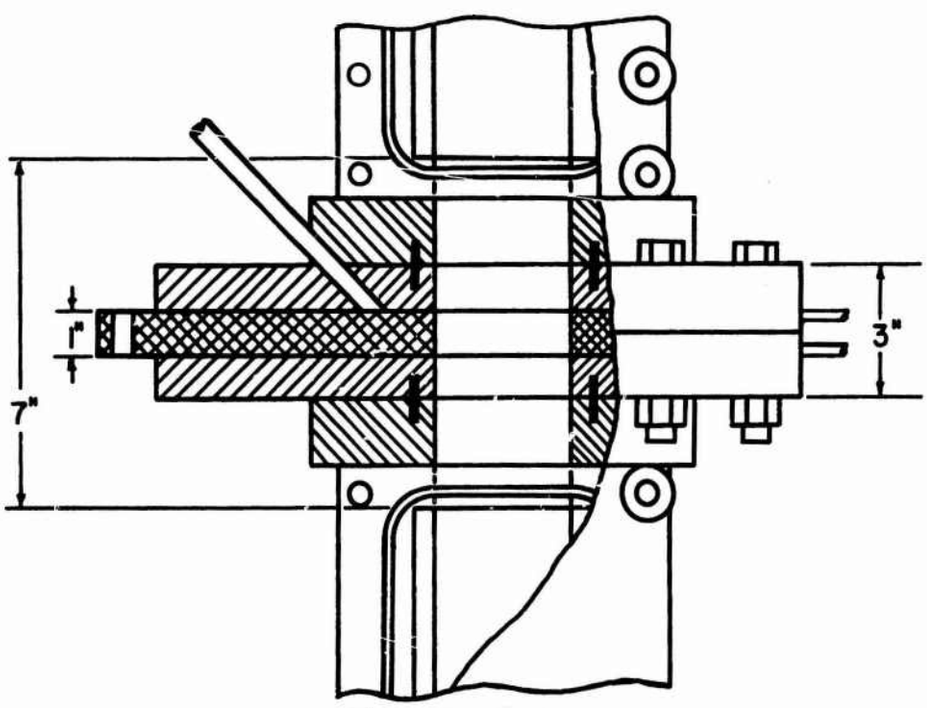

Firing Position (Open)

Figure 3. Schematic diagram of the sliding valve assembly showing both the filling (closed) and firing (open) positions.

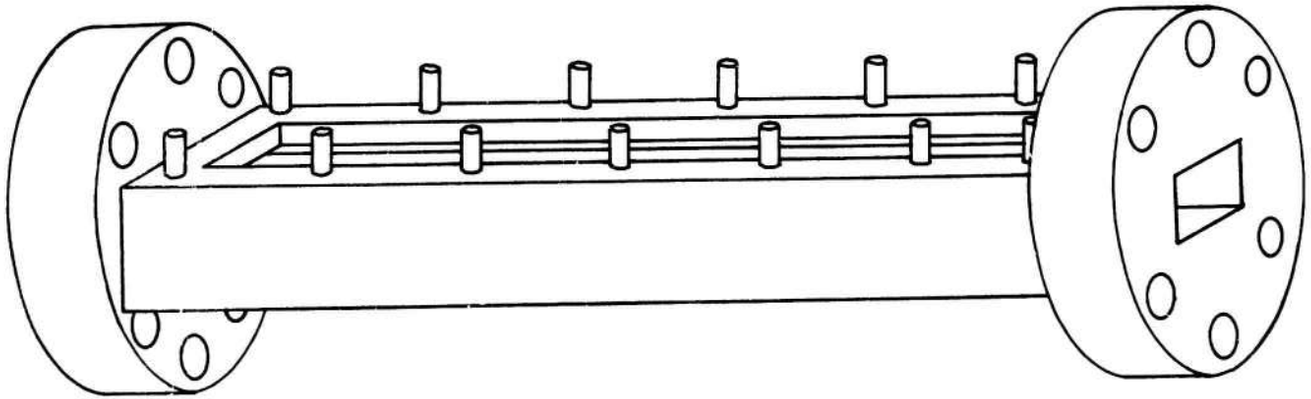

(a) Vertical Detonation Tube 2' Test Section

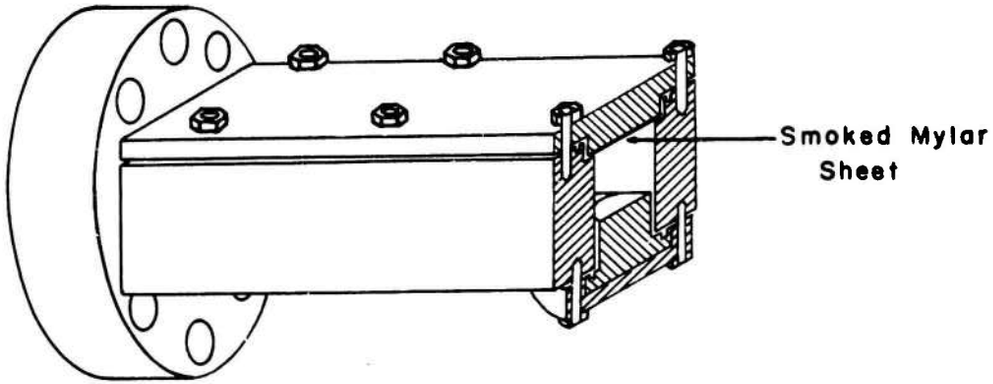

(b) Cross Section With Cover Plate In Place

FIGURE 4

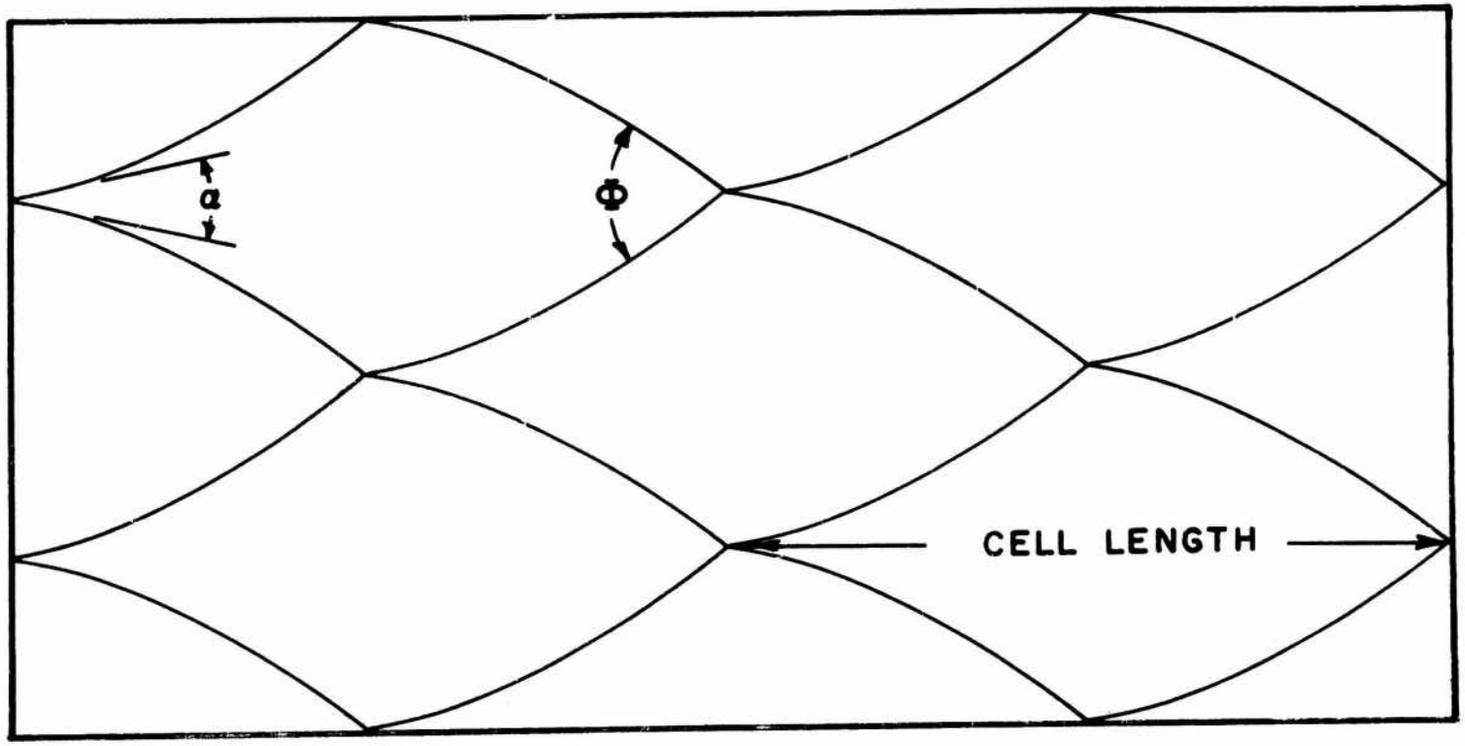

FIGURE 5 TRANSVERSE WAVES TRAVELLING IN OPPOSITE DIRECTIONS INTERSECT PRODUCING CELLS

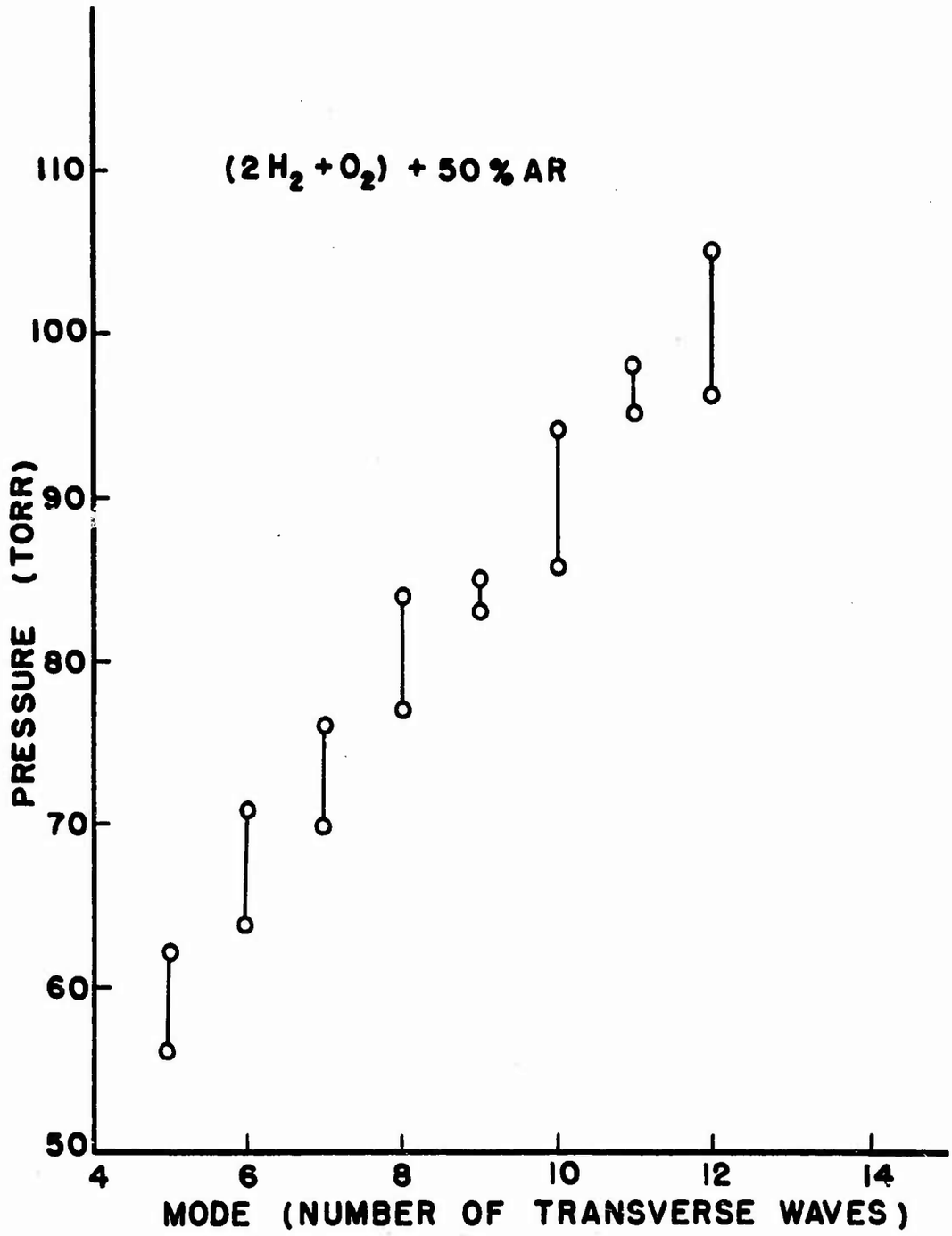
(2 H2 + O2) + 50 % AR
PRESSURE (TORR)
110
100
90
80
70
60
50
4
6
8
10
12
14
MODE (NUMBER OF TRANSVERSE WAVES)

FIGURE 6

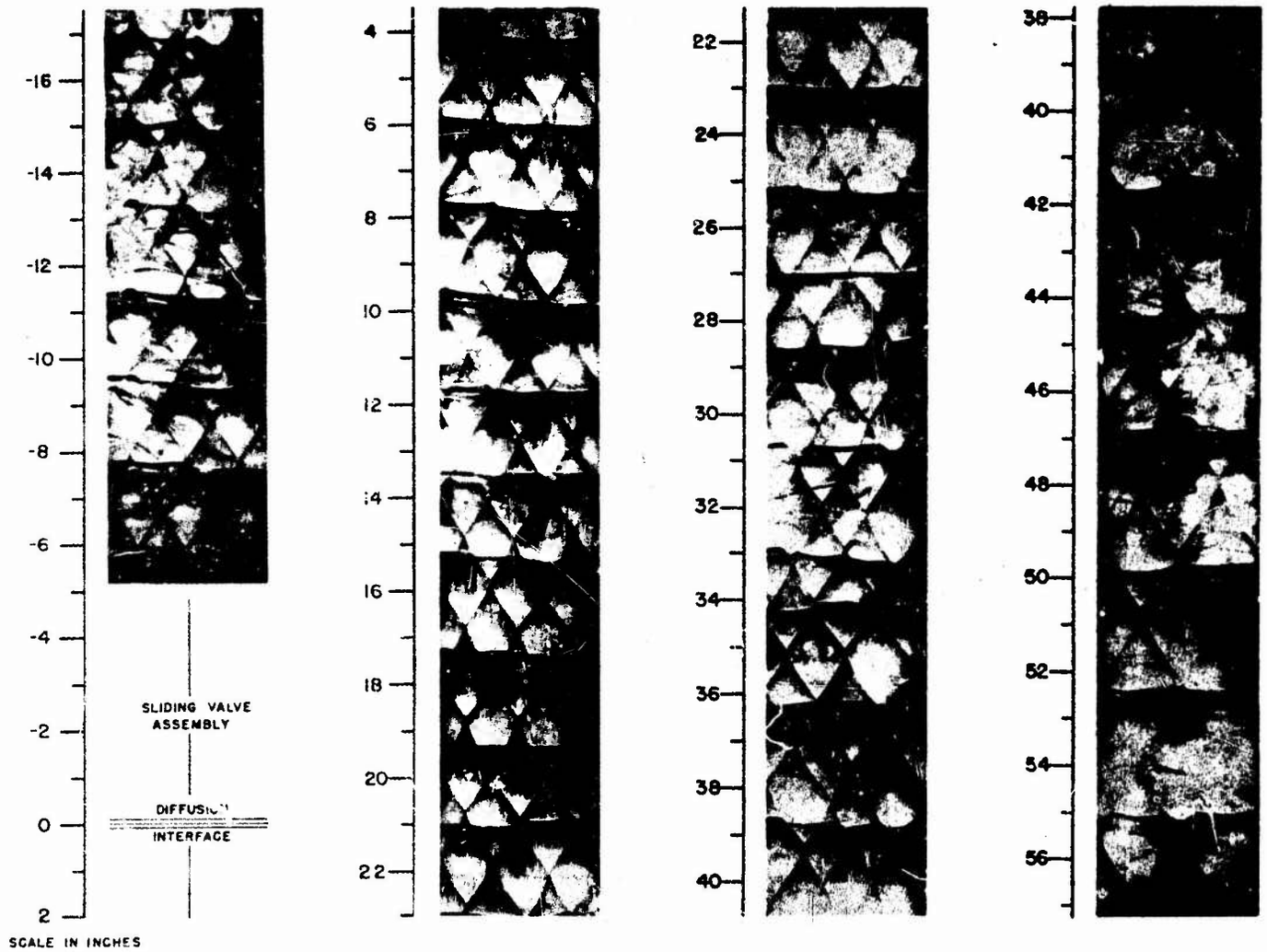

Figure 7. Smoke foil record of a detonation propagating in a 3 X 6 mode in $(2H_2 + O_2)$ + 50% Argon making a transition to a 2 X 4 mode in a $(2H_2) + O_2)$ + 70% Argon mixtures at 65 torr initial pressure.

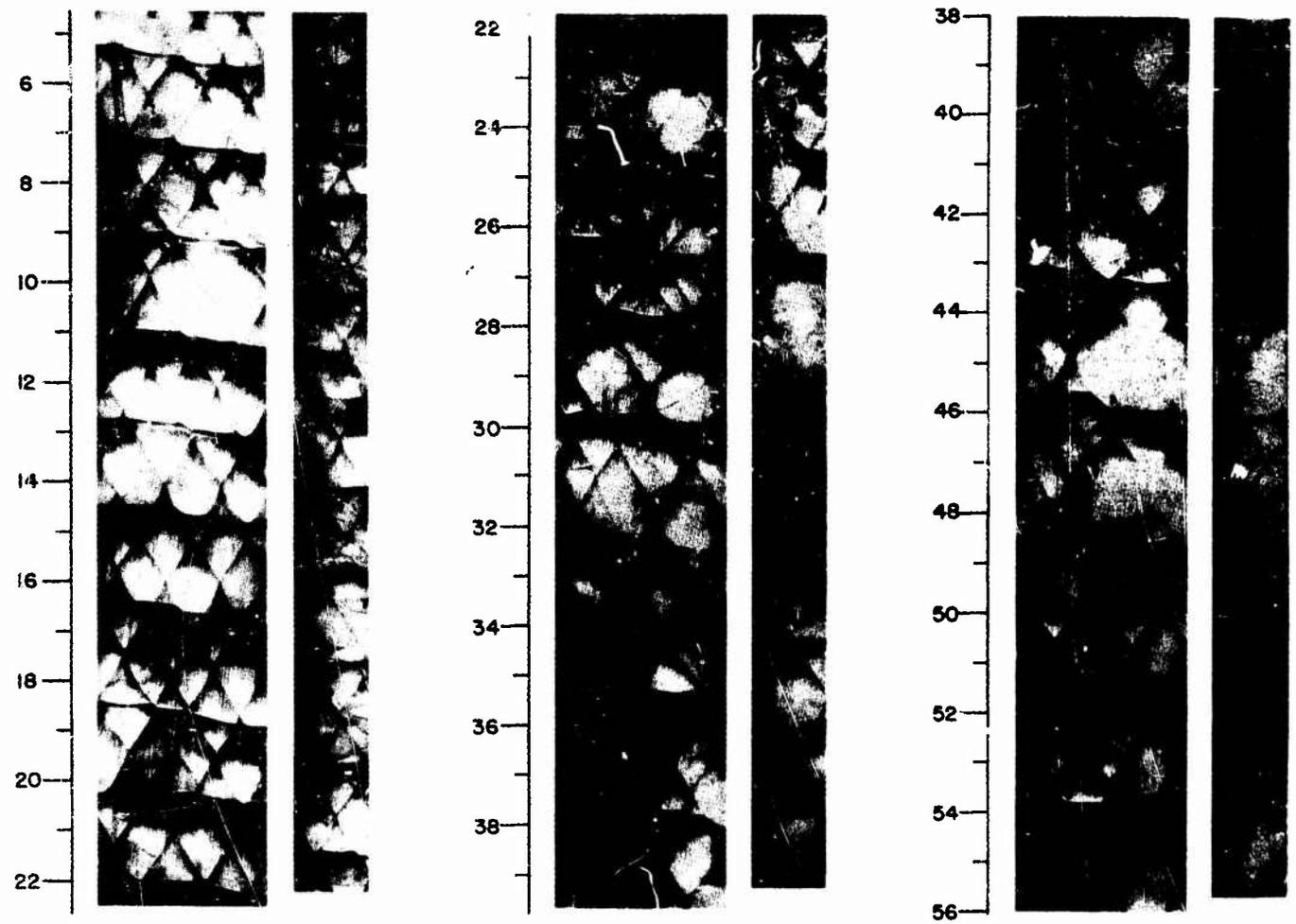

SCALE IN INCHES

Figure 8. Smoke foil record of a detonation propagating in a 3 X 7 mode in $(2H_2 + O_2)$ + 50% Argon making a transition to a 2 X 5 mode in a $(2H_2 + O_2)$ + 70% Argon mixture at 75 torr initial pressure. The edge foil shows the structure in the slapping mode.

NOT REPRODUCIBLE

direction of propagation

FIGURE 9 TRANSITION OBSERVED IN EXPERIMENT NUMBER 3 AFTER A TEN MINUTE DIFFUSION TIME. NO TRANSIENT BEHAVIOR WAS SEEN ON THE BOTTOM SMOKE FOIL FOR THIS CASE.

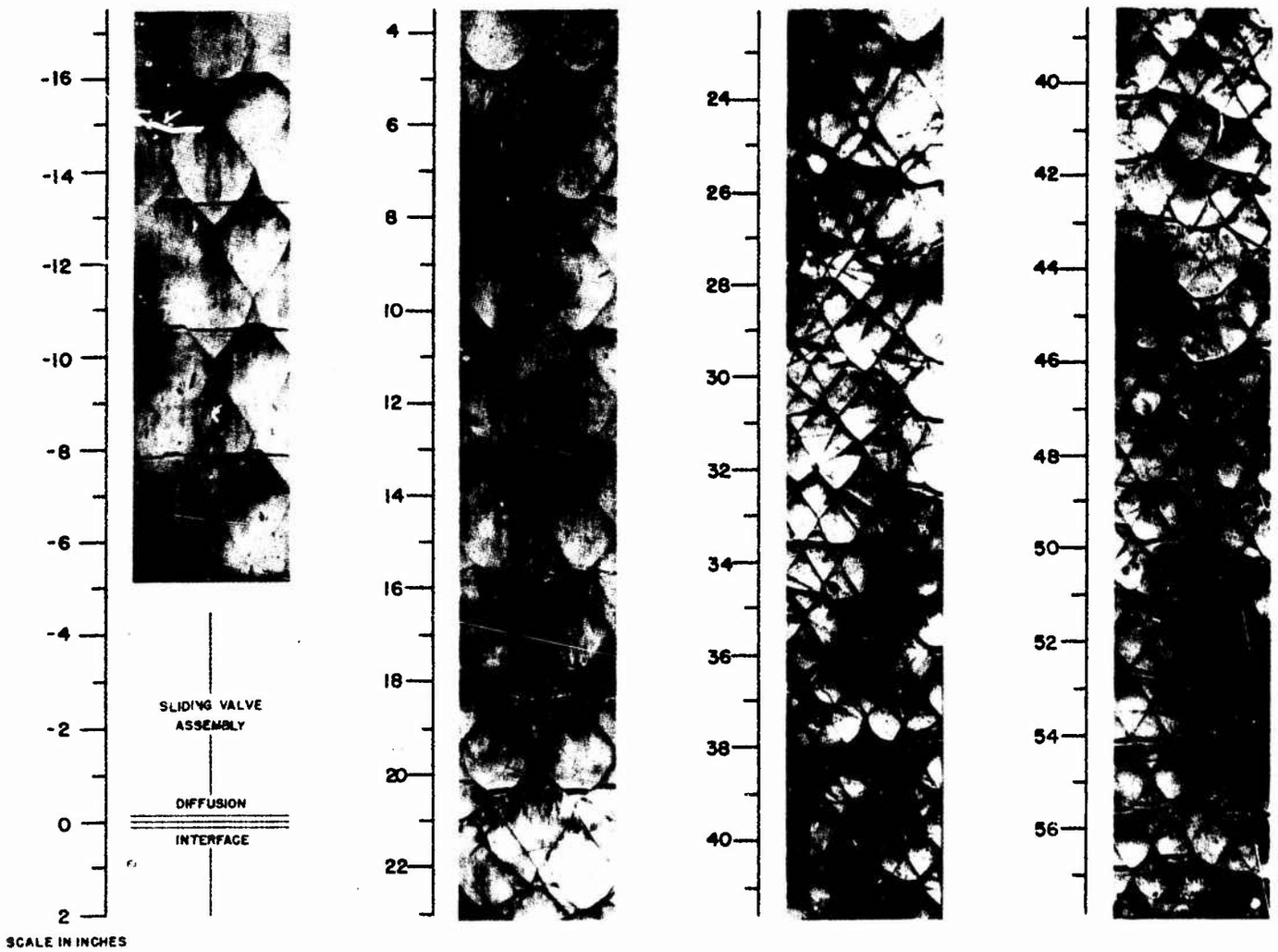

Figure 10. Smoke foil record of a detonation propagating in a 2 X 4 mode in $(2H_2 + O_2)$ + 70% HE making a transition to a 4 X 8 mode in a $(2H_2 + O_2)$ + 60% HE mixture at an initial pressure of 140 torr.

NOT REPRODUCIBLE

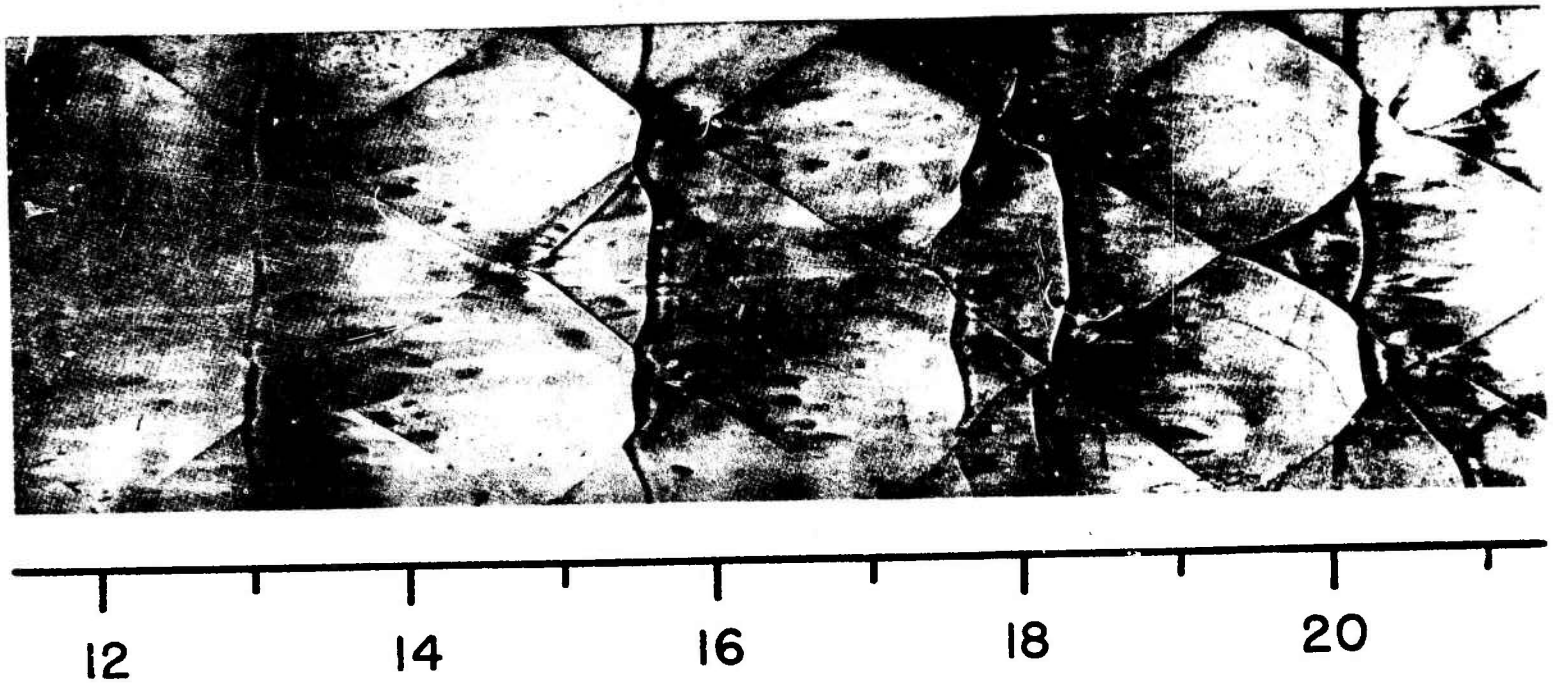

FIGURE 11 ENLARGEMENT OF THE EARLY TRANSIENT BEHAVIOR OBSERVED IN FIGURE 10

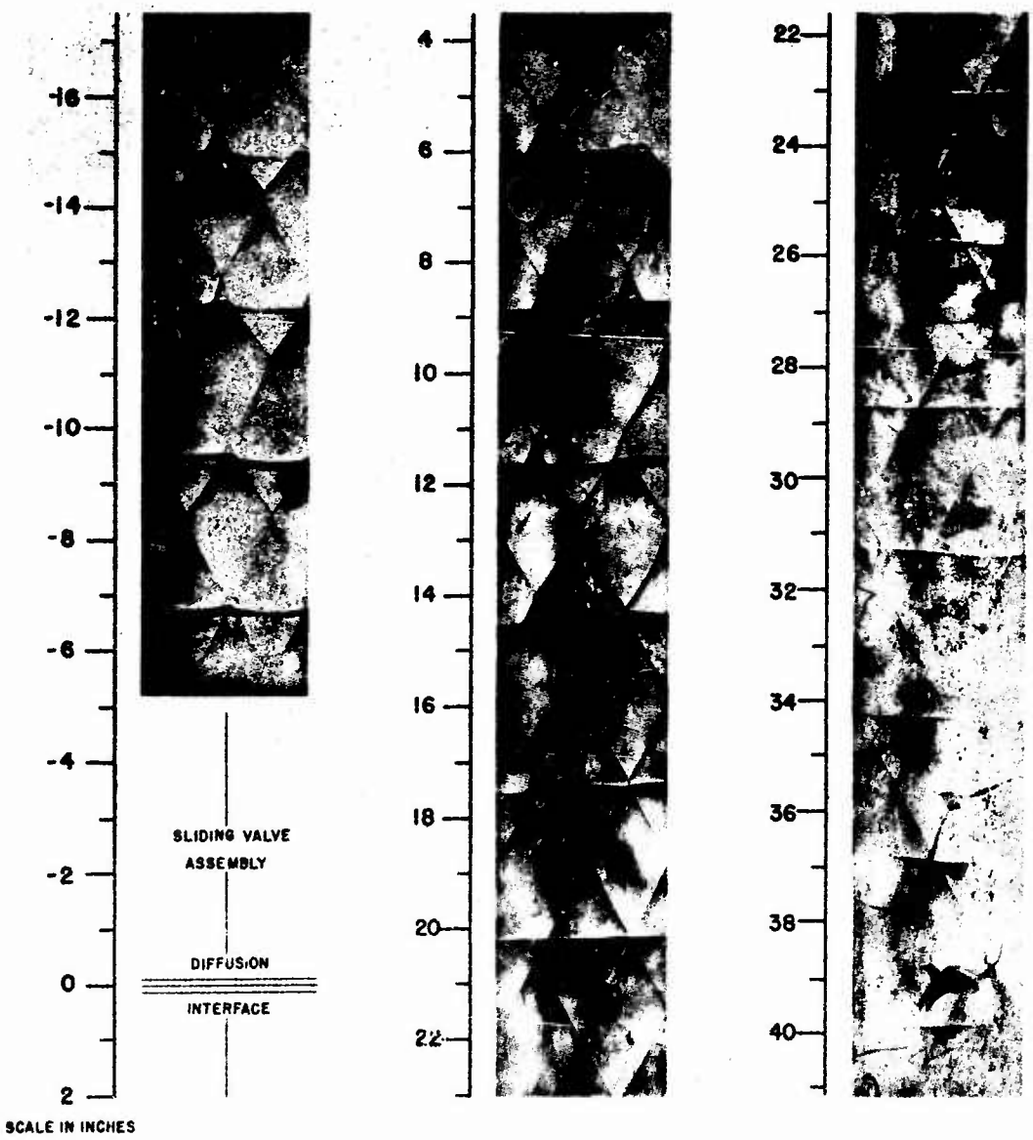

Figure 13. Smoke foil record showing the decay of the transverse waves as the detonations propagate into an inert gas. The gas mixture in the upper section was $(2H_2 + O_2)$ + 70% He and the mode number corresponding to an initial pressure of 140 torr was 2 X 4. The gas mixture in the bottom section was 30% Argon plus 70% Helium.

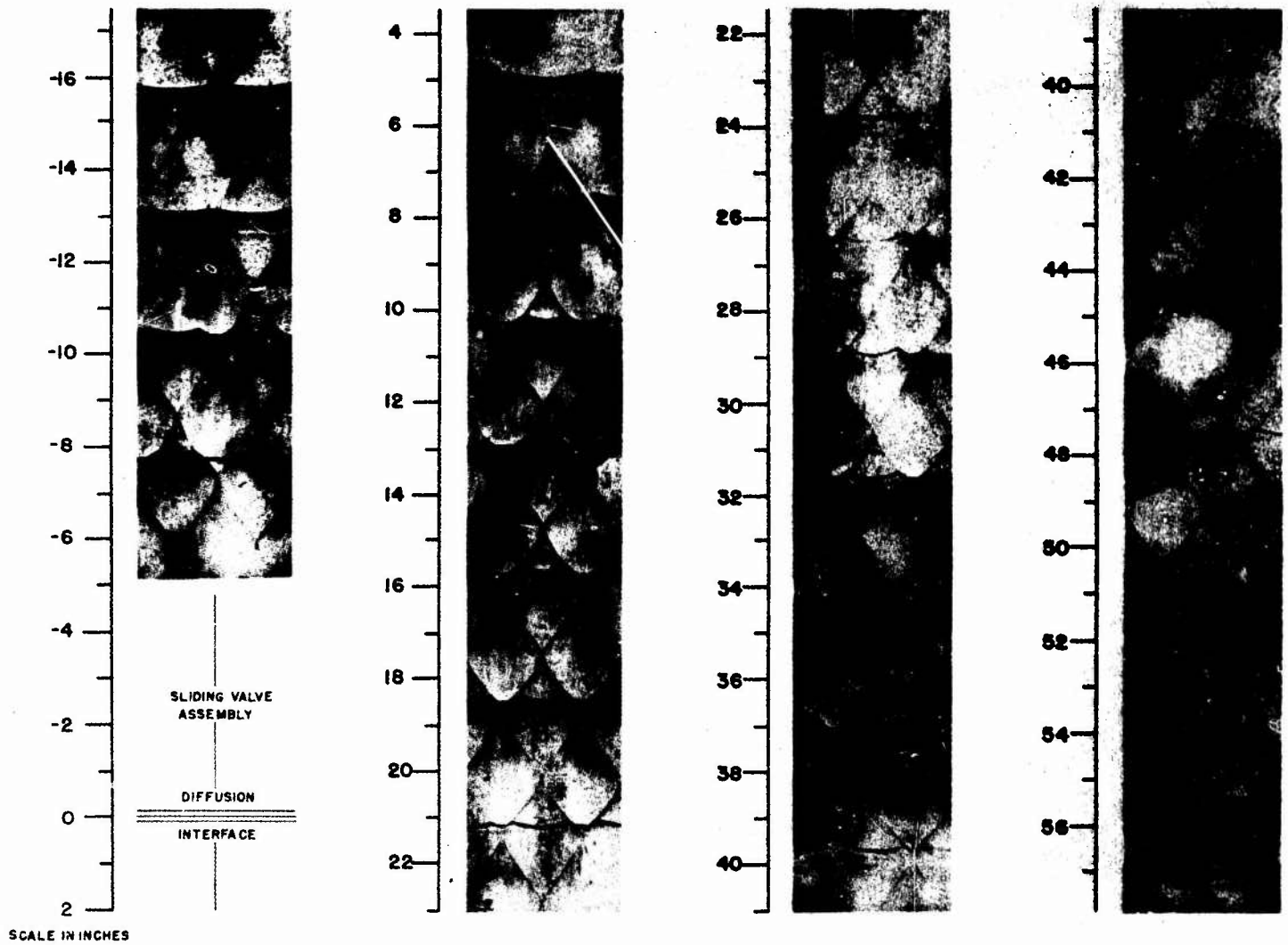

Figure 12. Smoke foil record of a detonation propagating in a 2 X 4 mode in $(2H_2 + O_2)$ + 70% He. The mixture in the lower section is $(2H_2 + O_2)$ + 65% He and its equilibrium mode number at 140 torr is 3 X 5. Notice the changes in structural details although there is no change in the mode number along the length of this record.

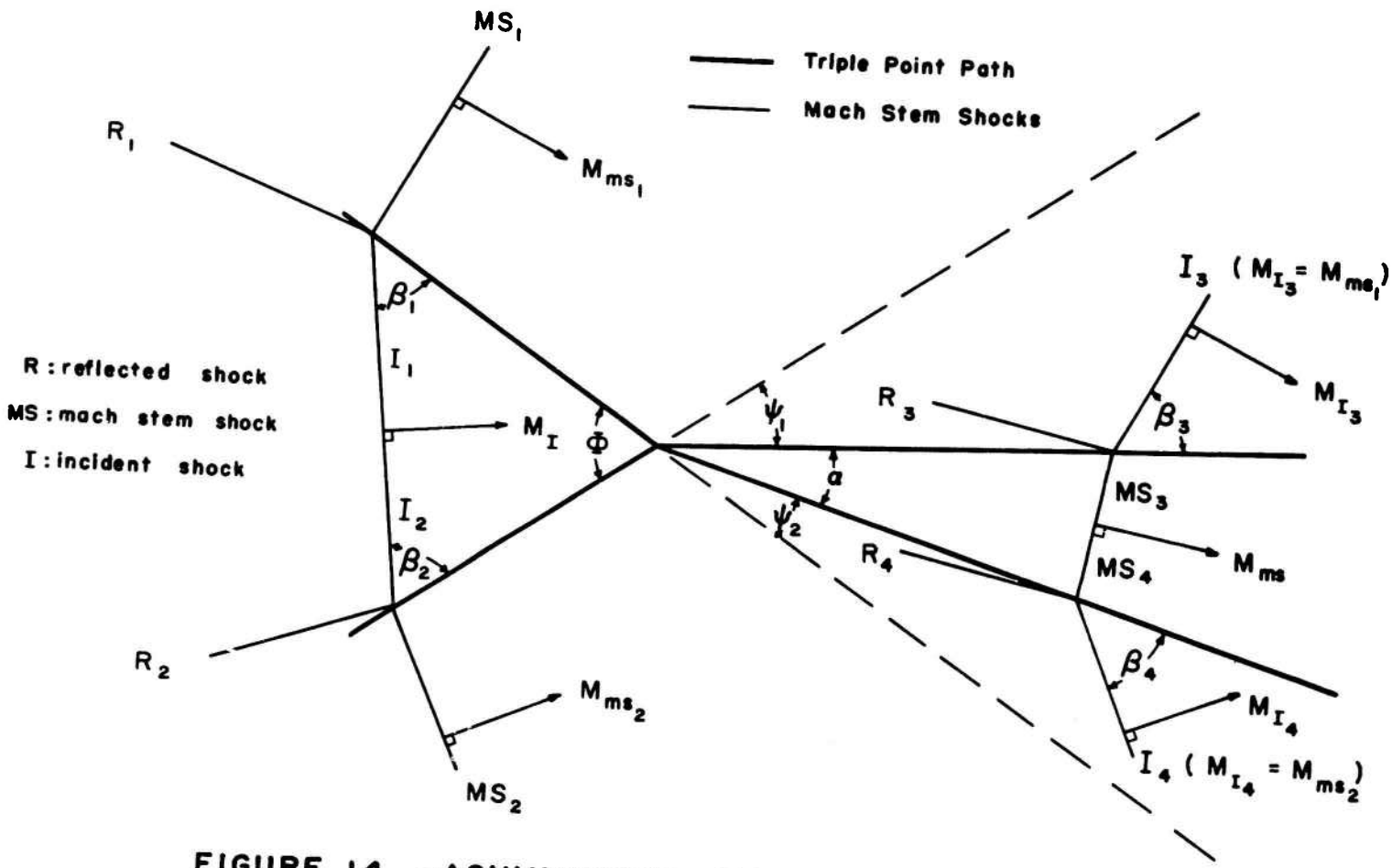

FIGURE 14 -ASYMMETRIC INTERSECTION GEOMETRY- MACH STEMS ARE SHOWN FOR TWO TIMES: ONE JUST BEFORE AND ONE JUST AFTER THE INTERSECTION

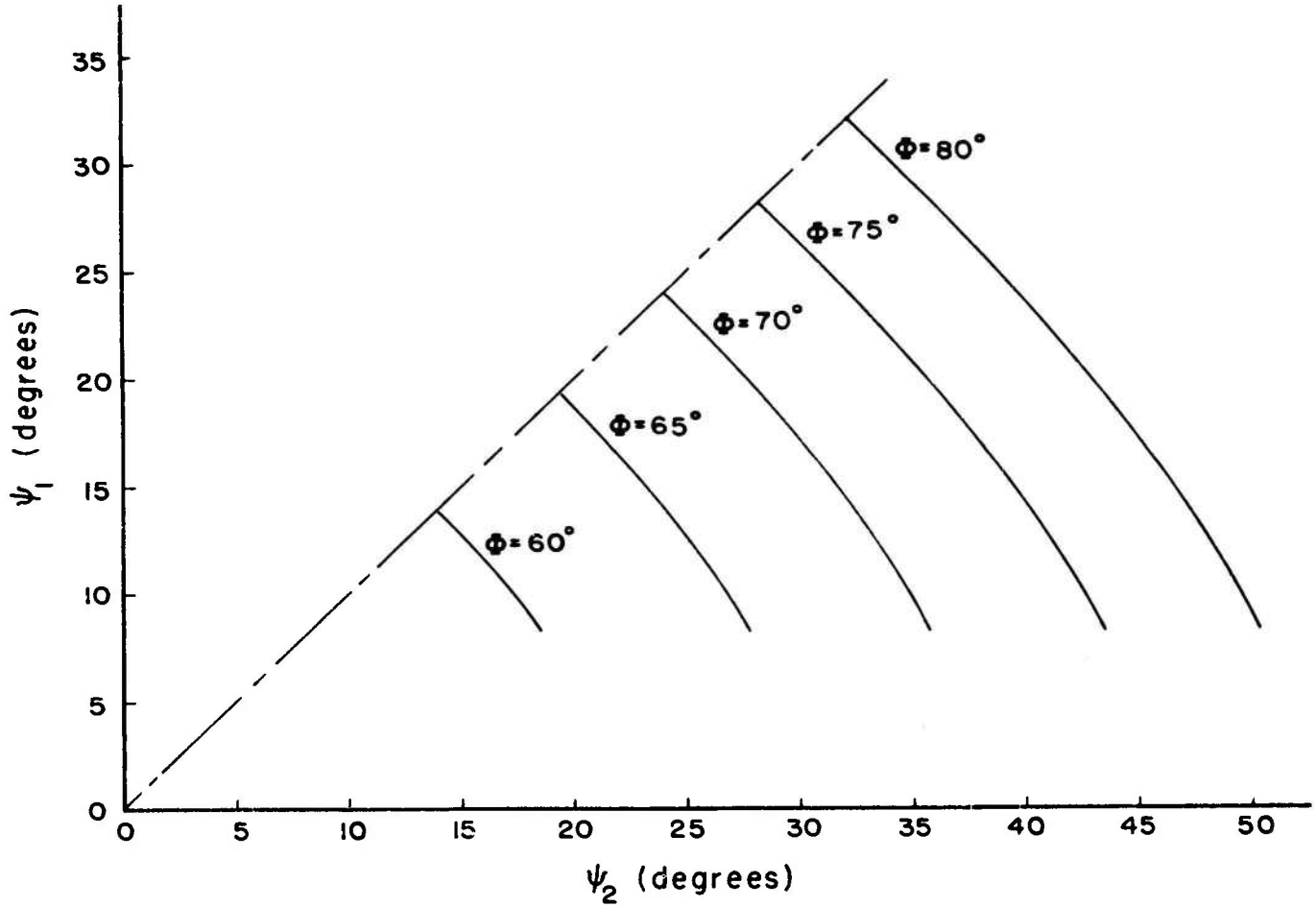

FIGURE 15 ψ_1 VERSUS ψ_2 FOR $(2H_2 + O_2) + 70\%$ AR

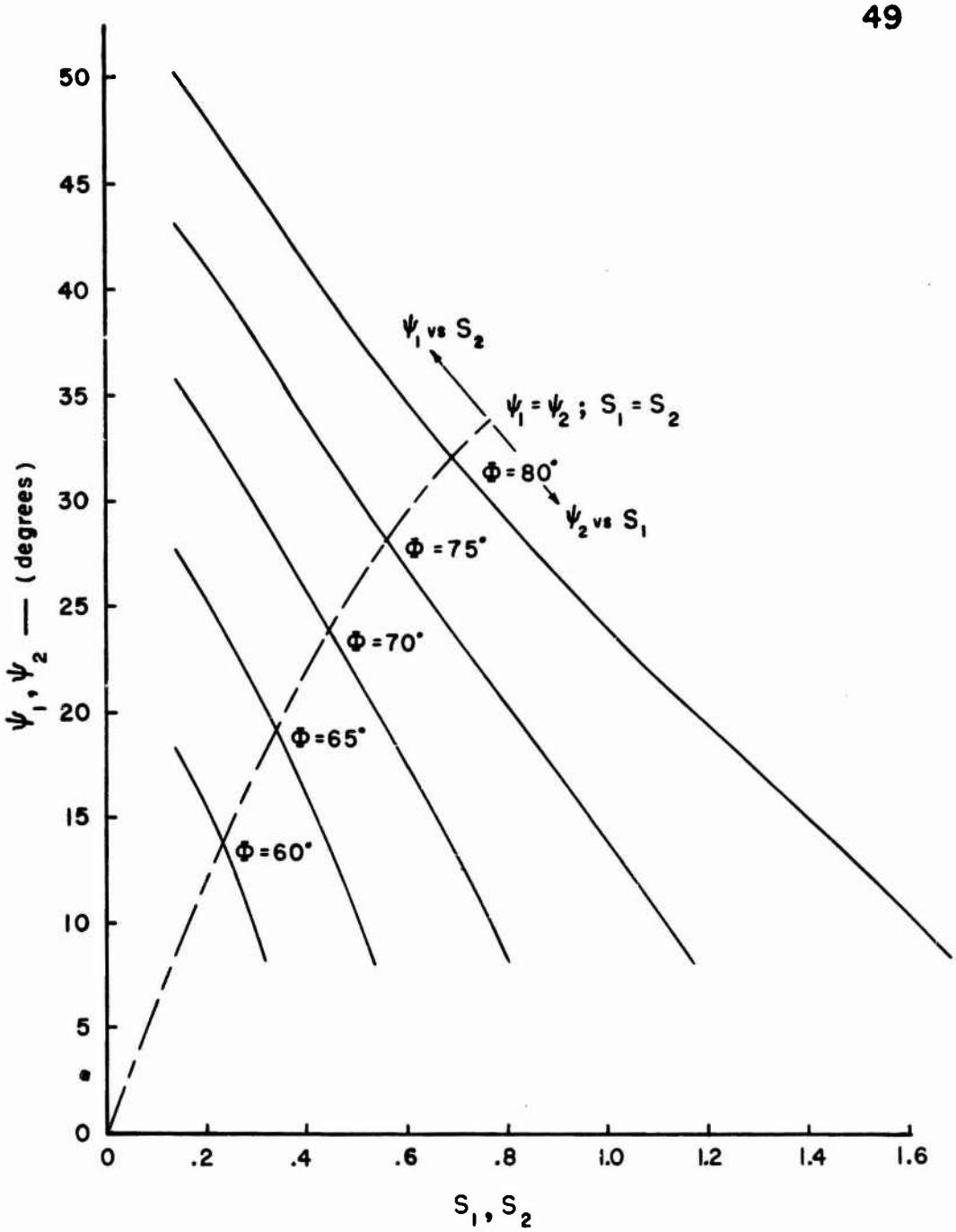

FIGURE 16 ψ VERSUS S
FOR $(2H_2 + O_2)$ + 70% AR

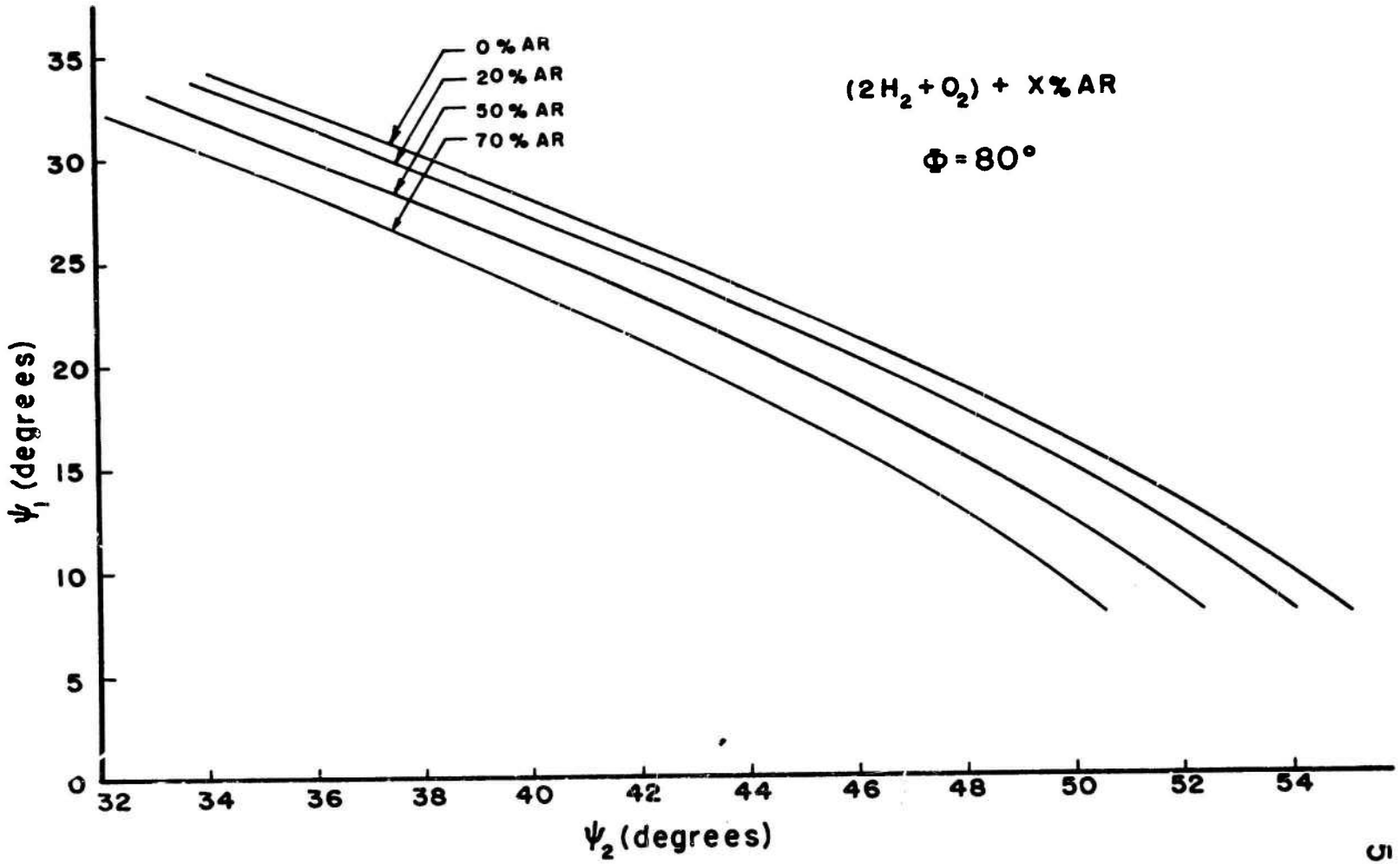

FIGURE 17 VARIATION OF ψ_1 vs ψ_2 WITH INERT GAS DILUTION

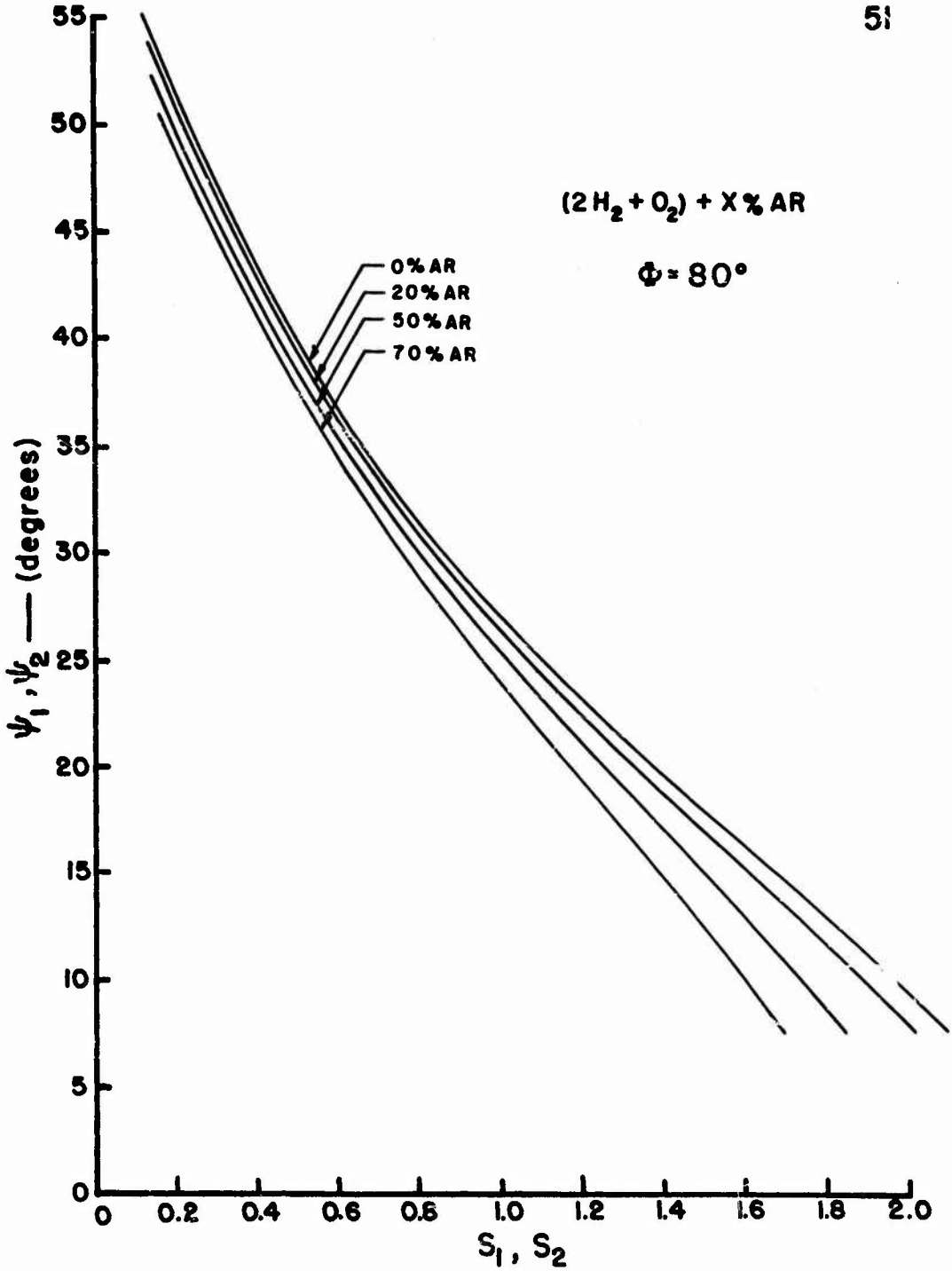

FIGURE 18 VARIATION OF ψ vs S WITH INERT GAS DILUTION

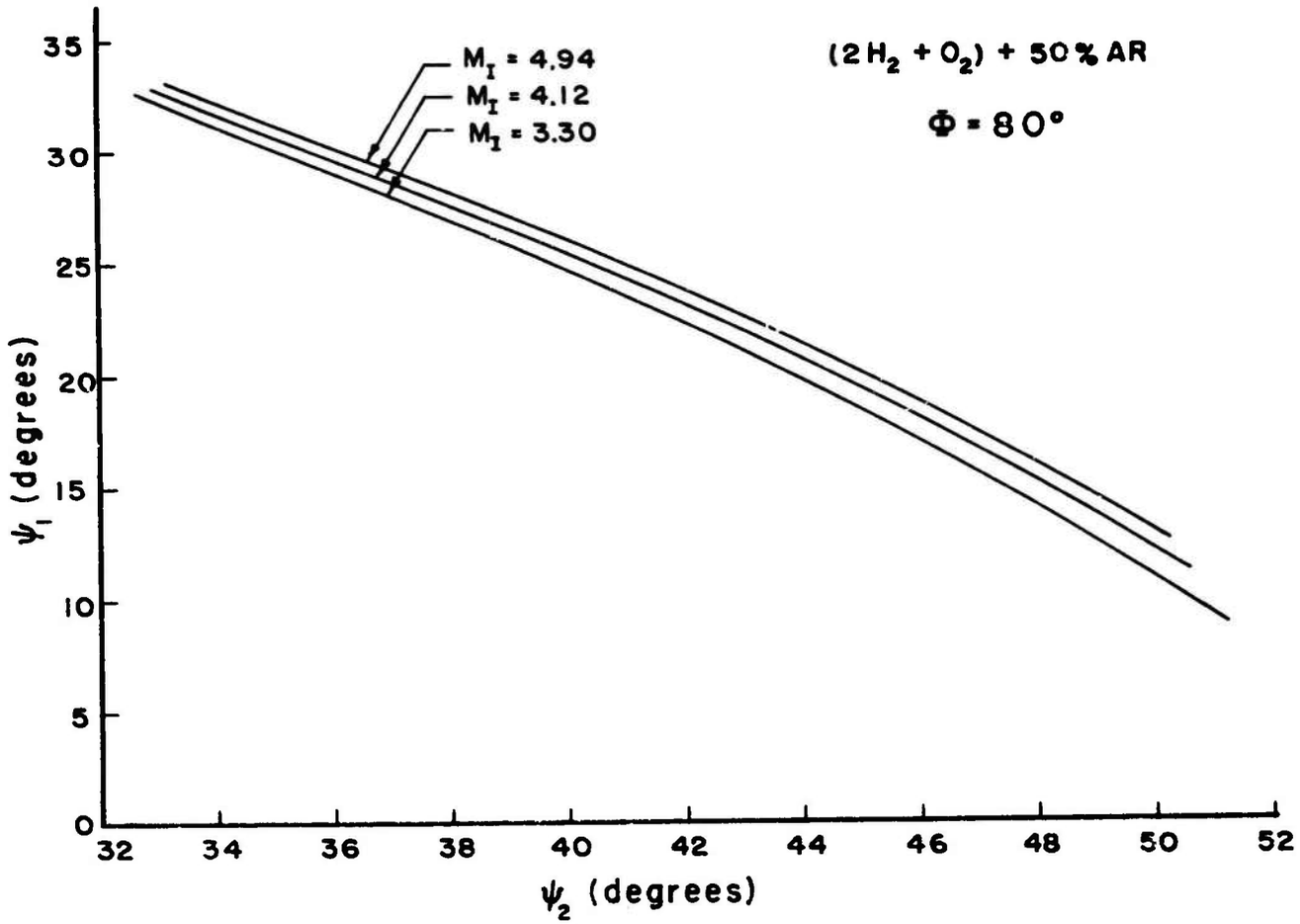

FIGURE 19 VARIATION OF ψ_1 vs ψ_2 WITH INCIDENT SHOCK MACH NUMBER

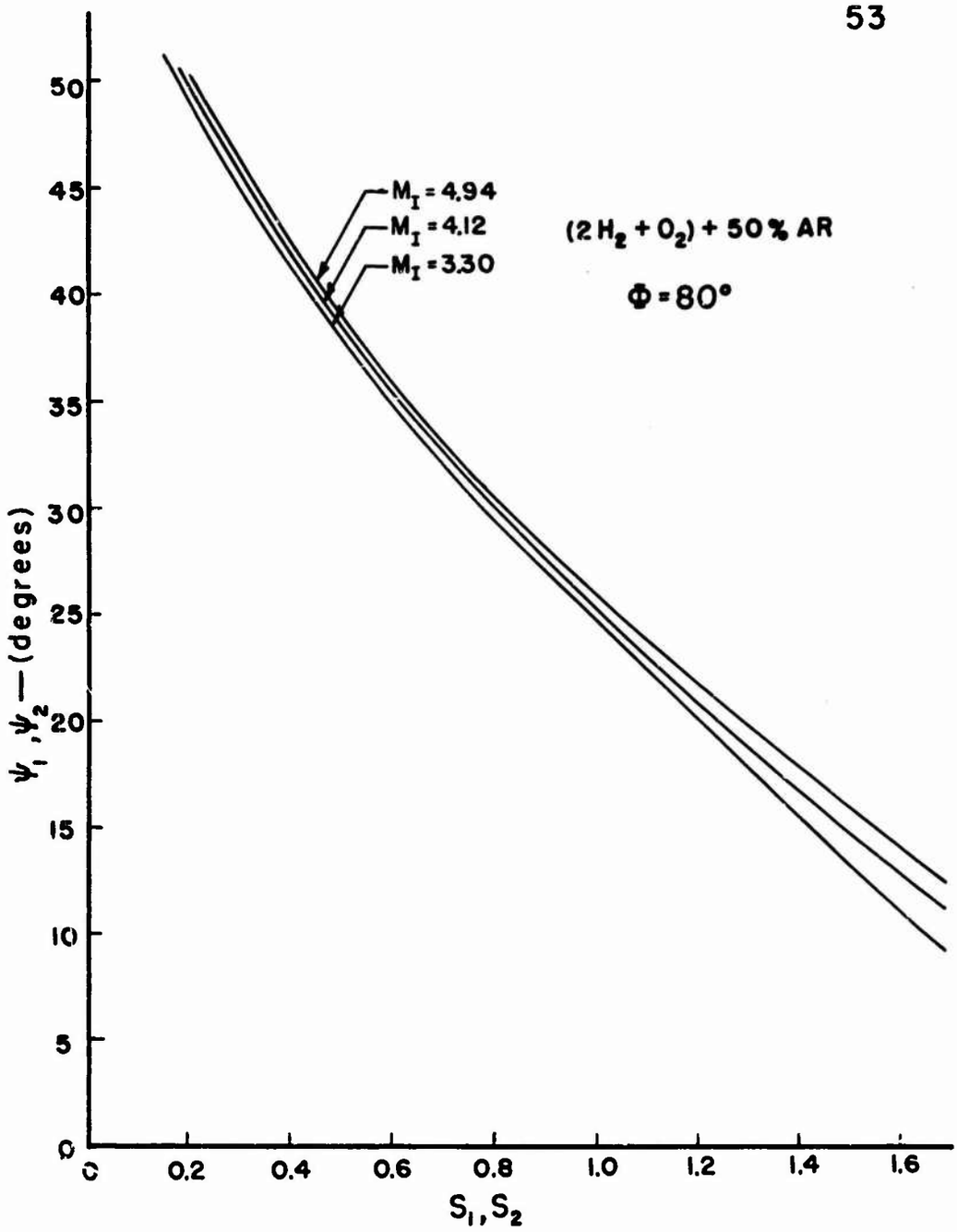

FIGURE 20 VARIATION OF ψ vs S WITH INCIDENT SHOCK MACH NUMBER

NOT REPRODUCIBLE

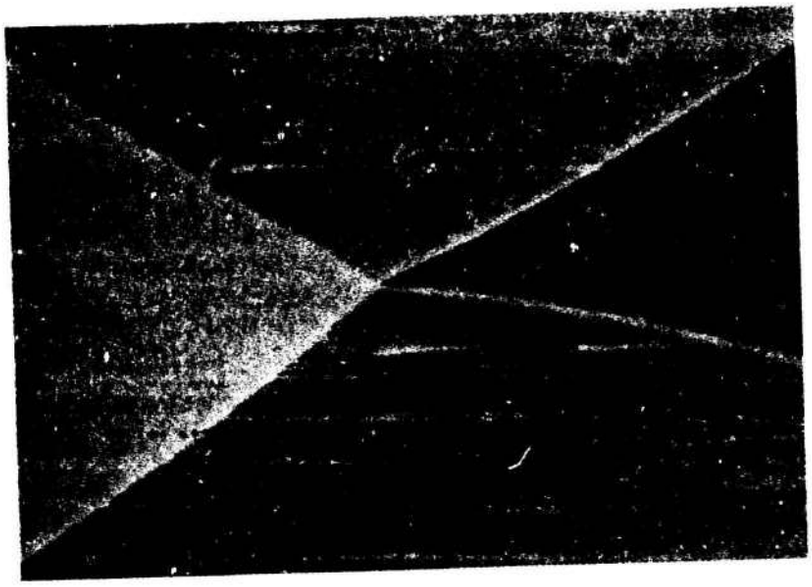

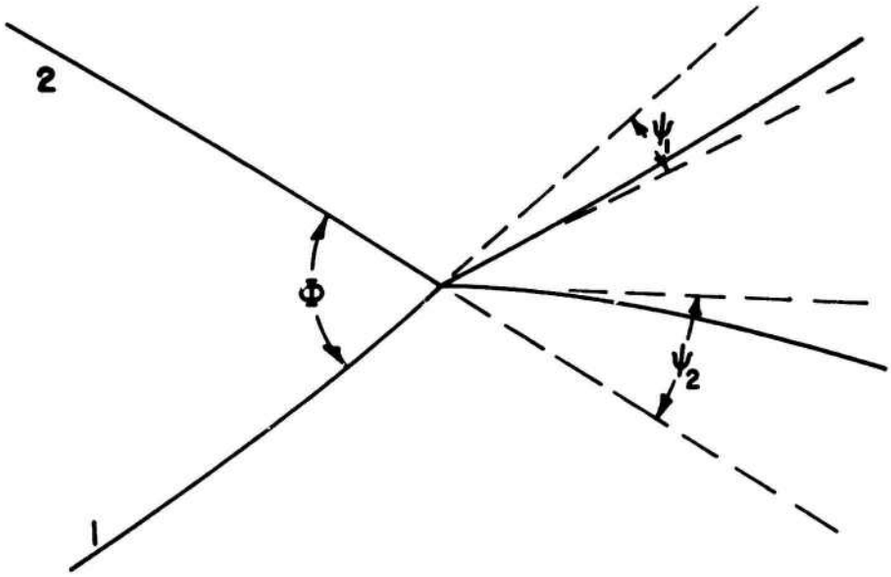

FIGURE 21 THE THREE ANGLES WHICH ARE MEASURED AT EACH INTERSECTION

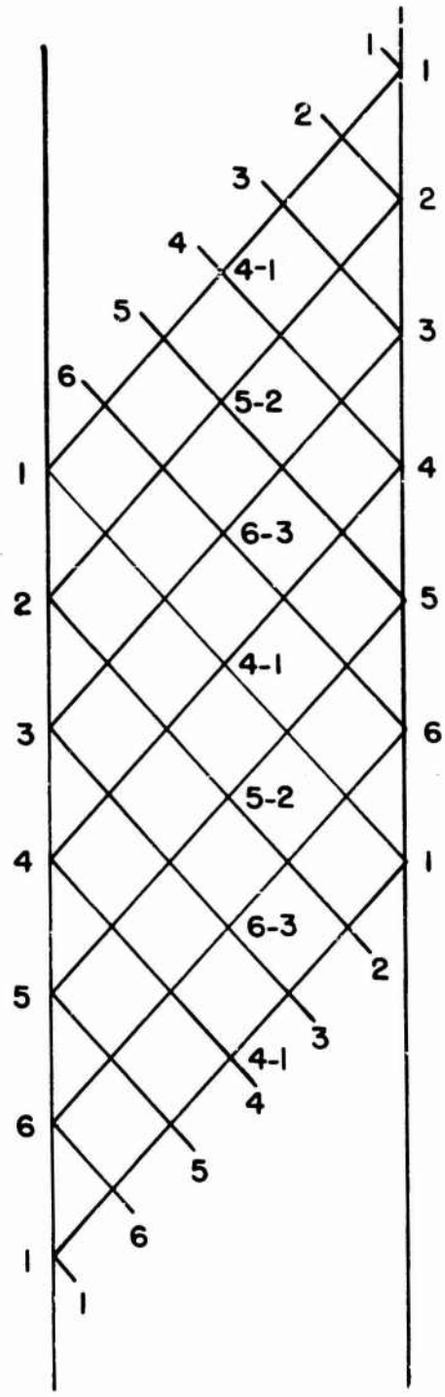

FIGURE 22 NUMBERING SYSTEM FOR A 6th MODE DETONATION

NOT REPRODUCIBLE

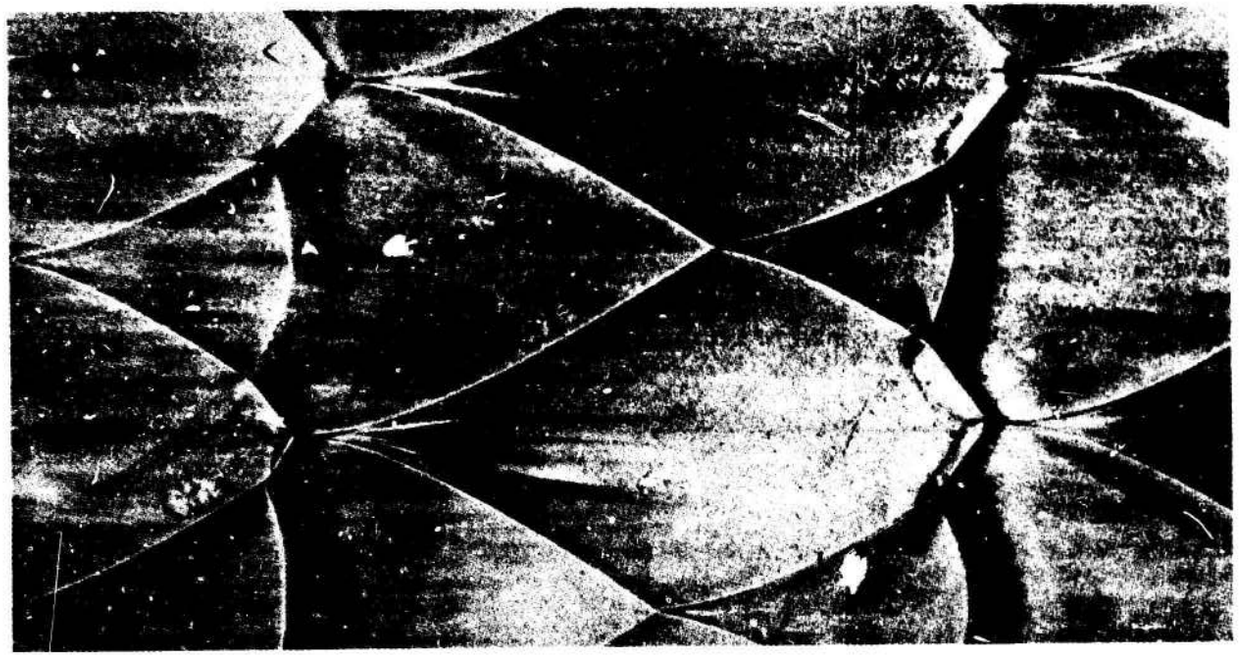

FIGURE 23 EFFECT OF THE SLAPPING WAVE ON THE ENTRANCE ANGLE Φ

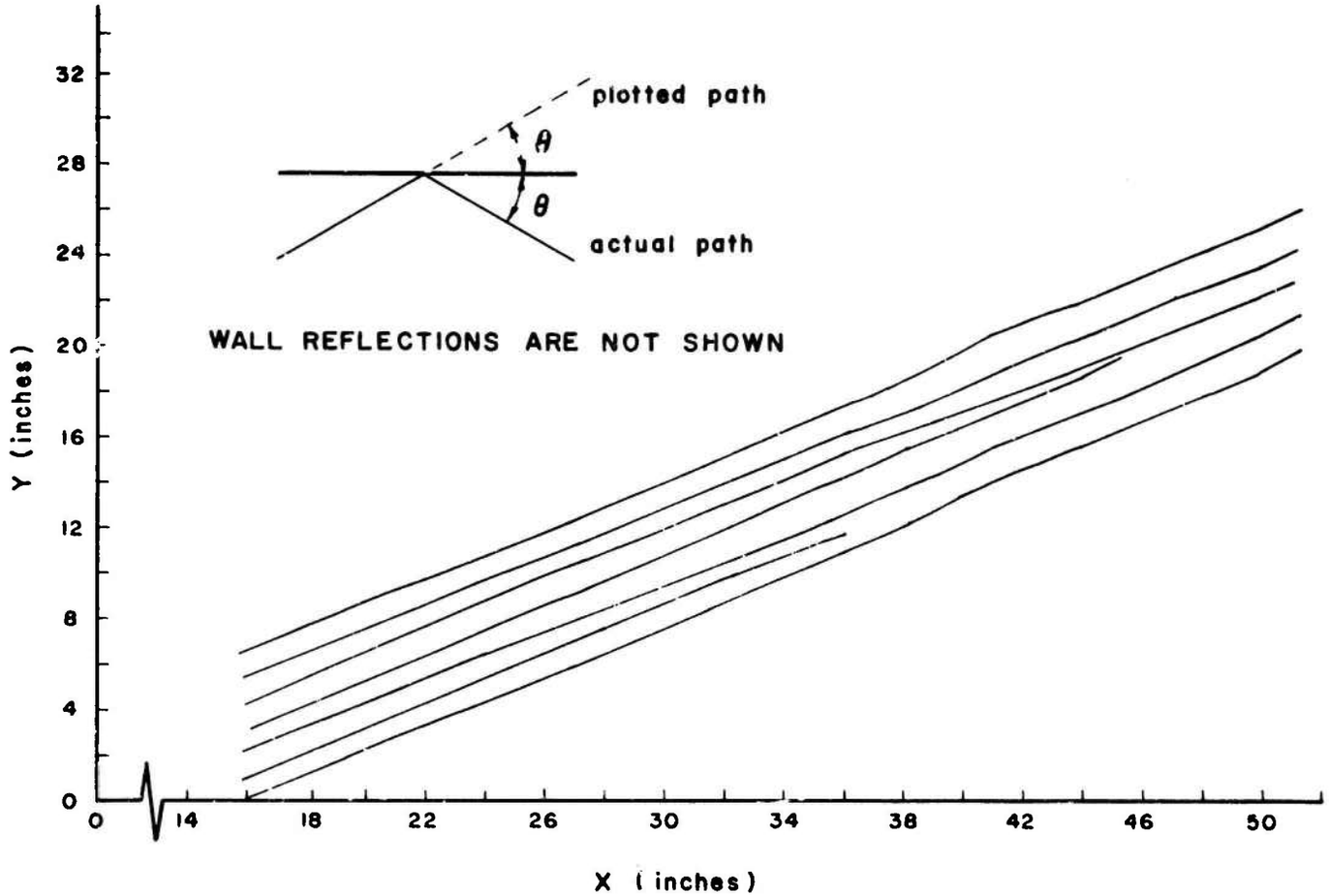

FIGURE 24 TRAJECTORIES OF THE SIX TRANSVERSE WAVES IN THE DETONATION

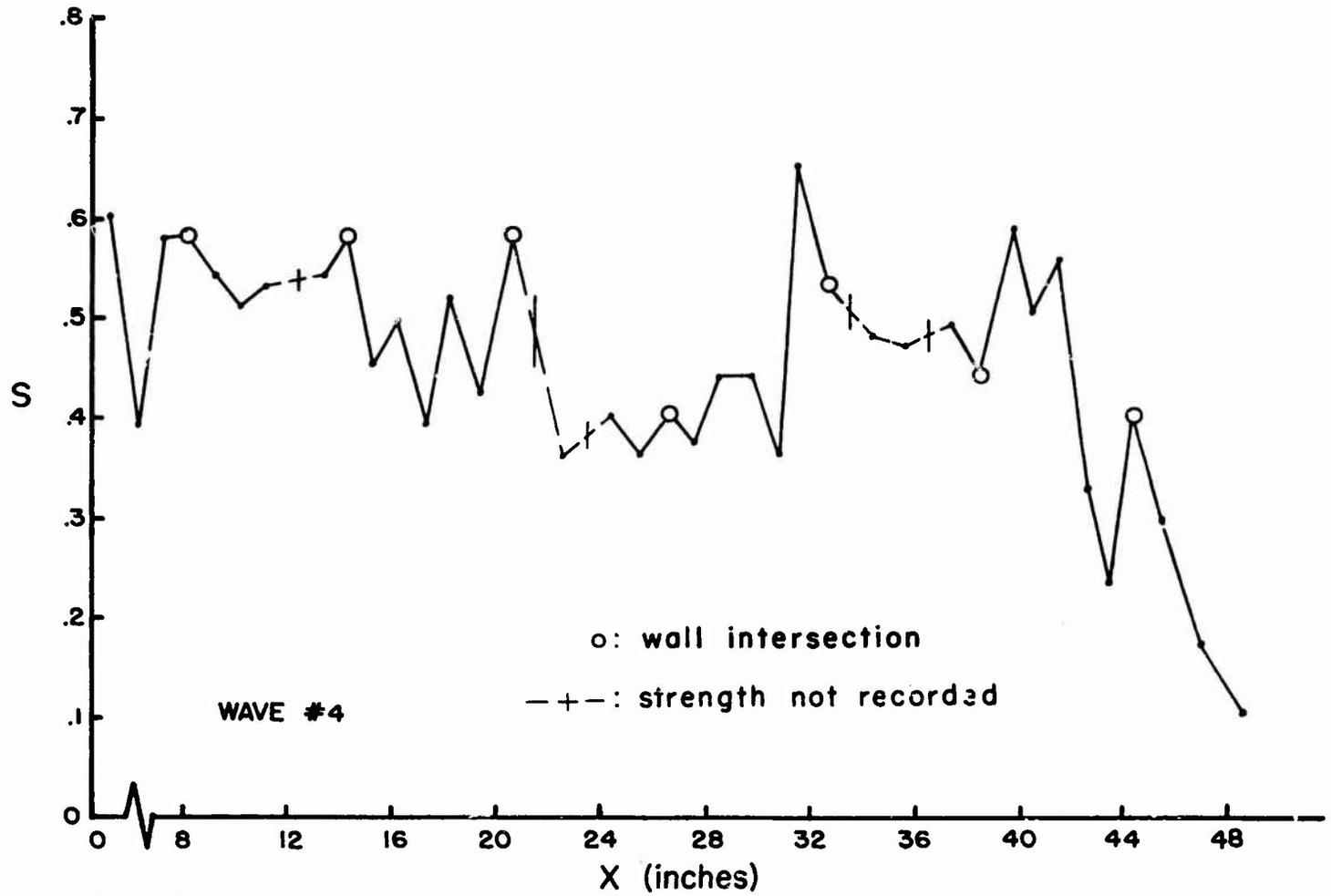

FIGURE 25 STRENGTH vs X FOR A WAVE WHICH FAILED
(Exp. no. 1)

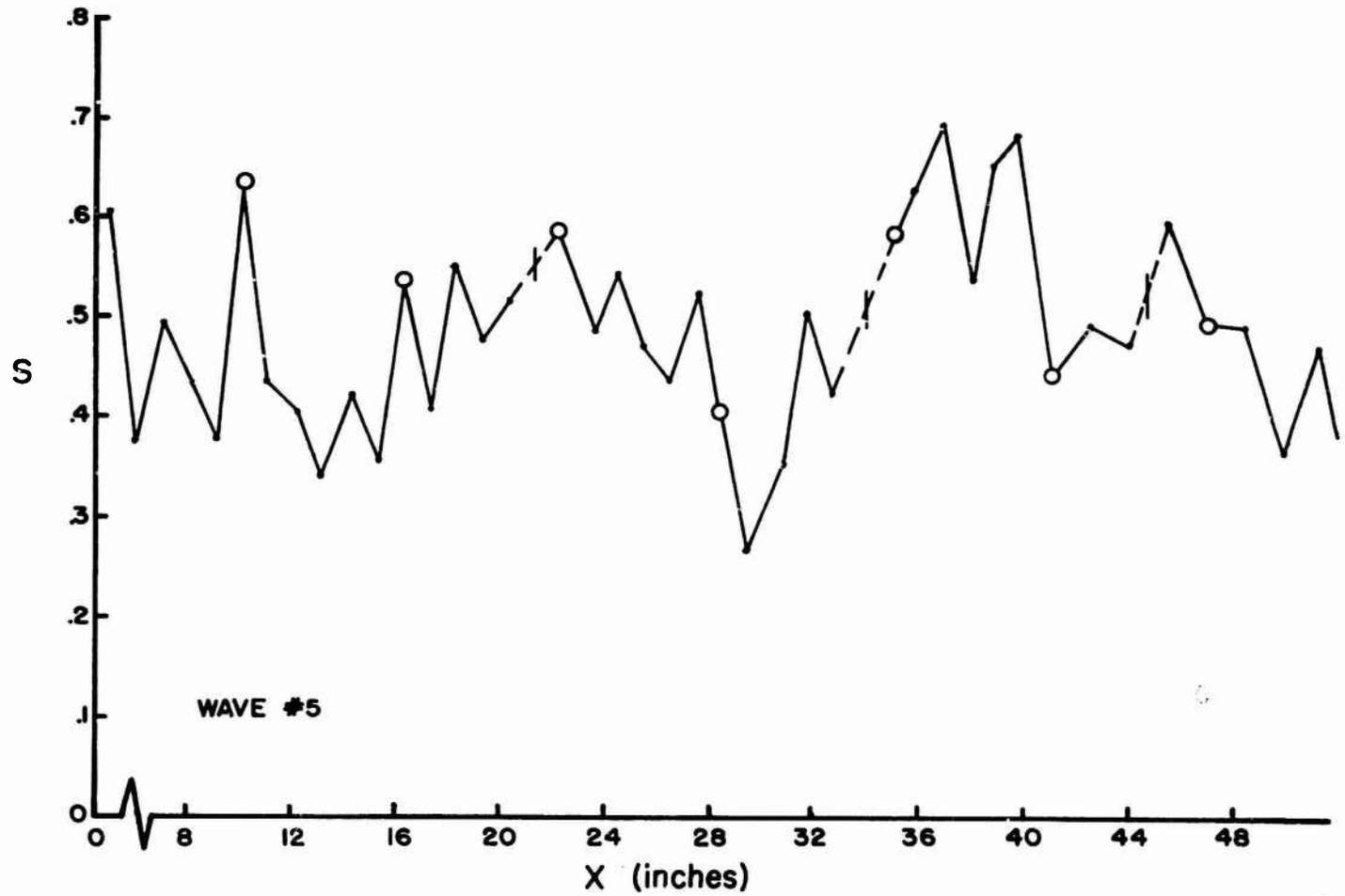

FIGURE 26 STRENGTH vs X FOR A WAVE WHICH DID NOT FAIL
(Exp. no. 1)

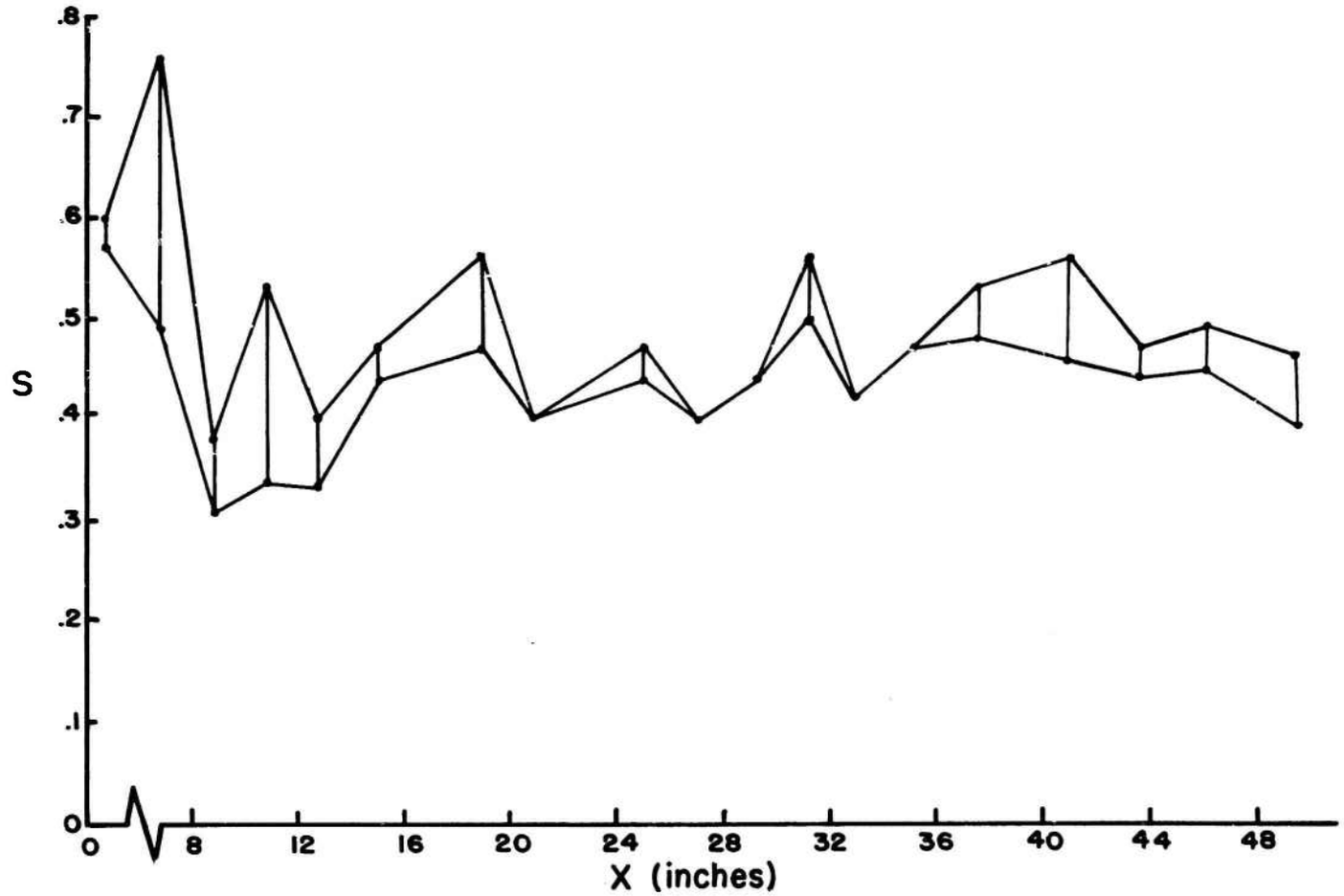

FIGURE 27 STRENGTH vs X FOR CENTERLINE INTERSECTIONS
(Exp. no. 1)

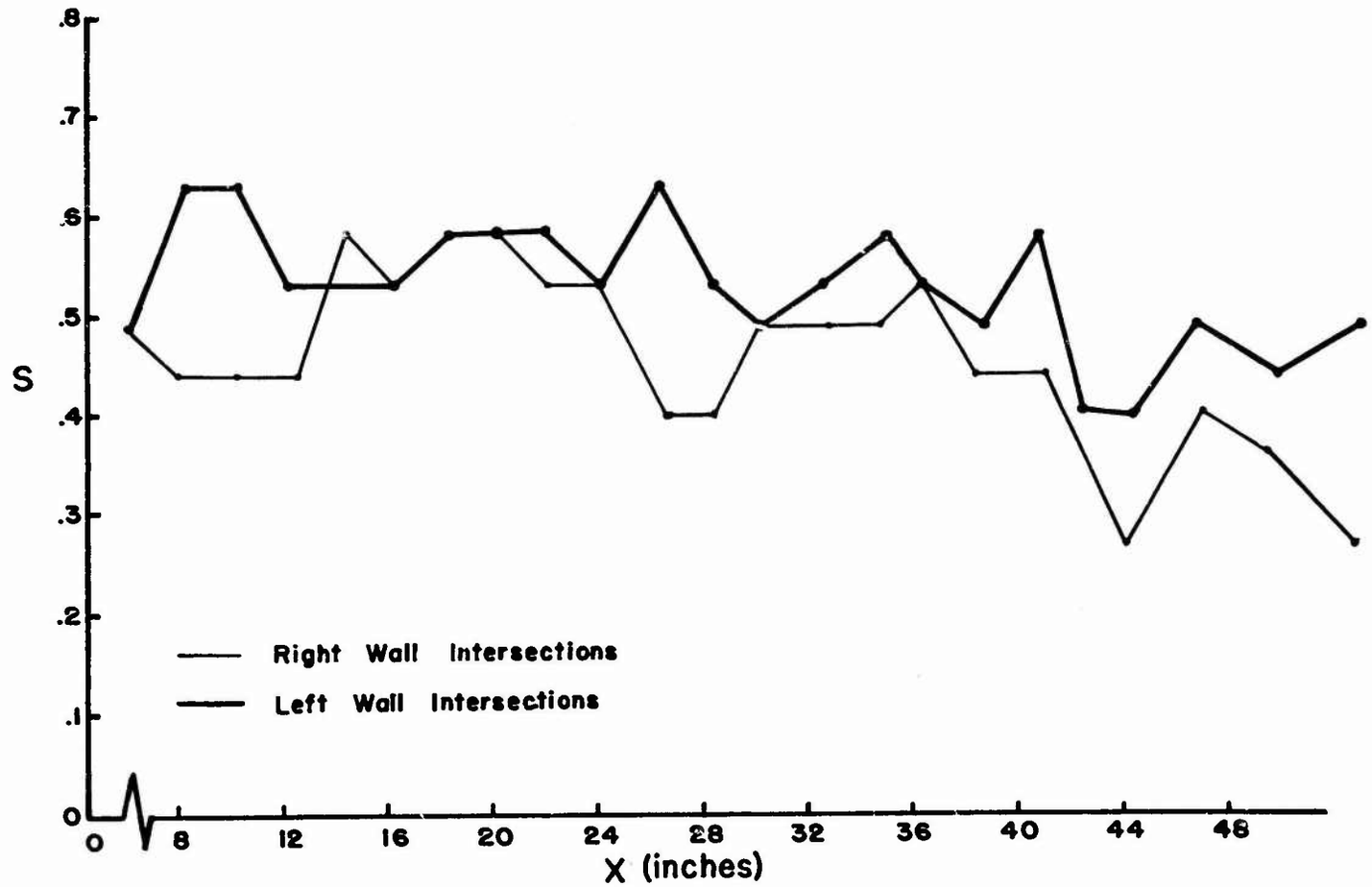

FIGURE 28 STRENGTH vs X FOR WALL INTERSECTIONS
(Exp. no. 1)

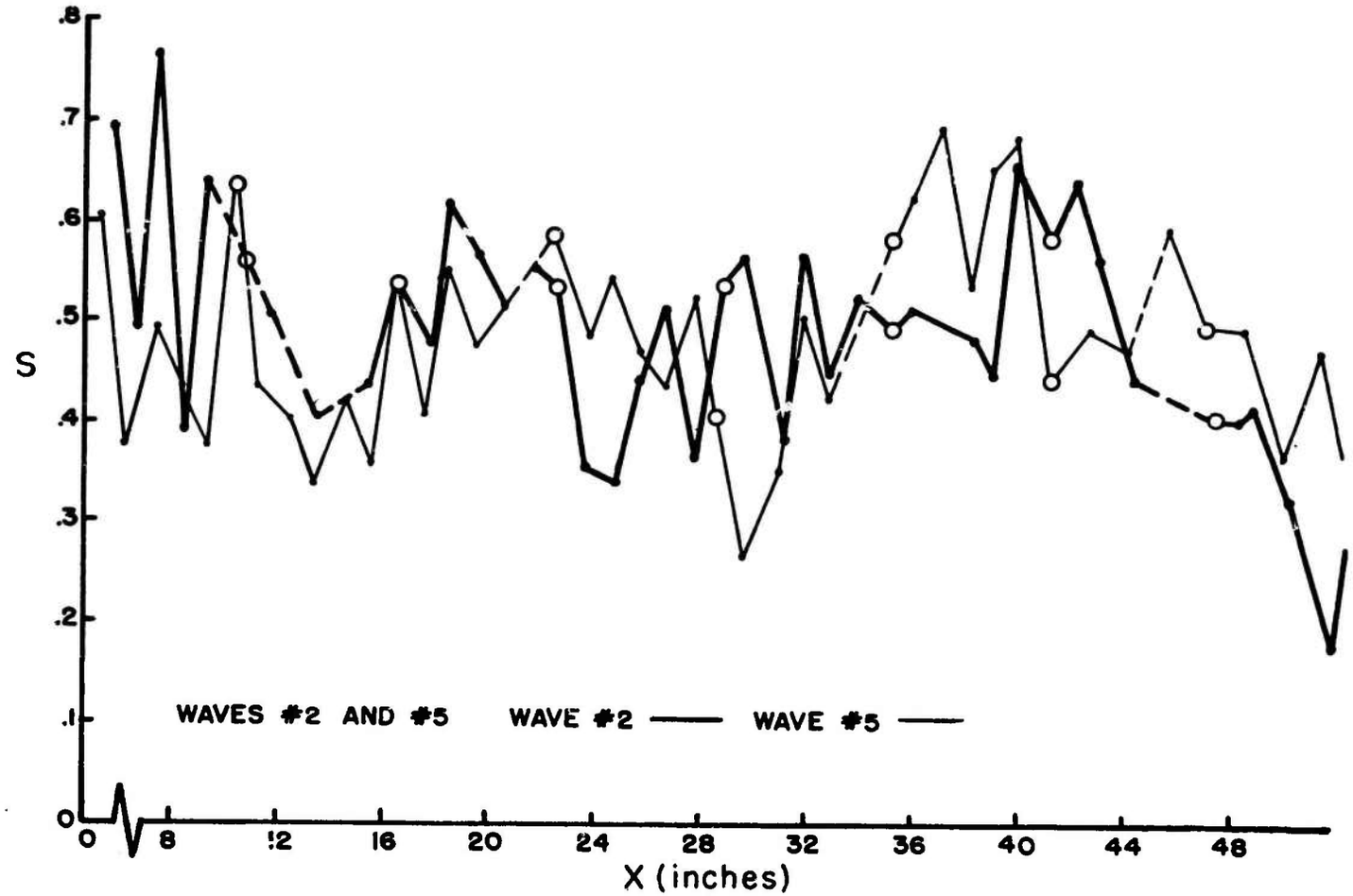

FIGURE 29 SUPERPOSITION OF TWO STRENGTH vs X PLOTS
(Exp. no. 1)

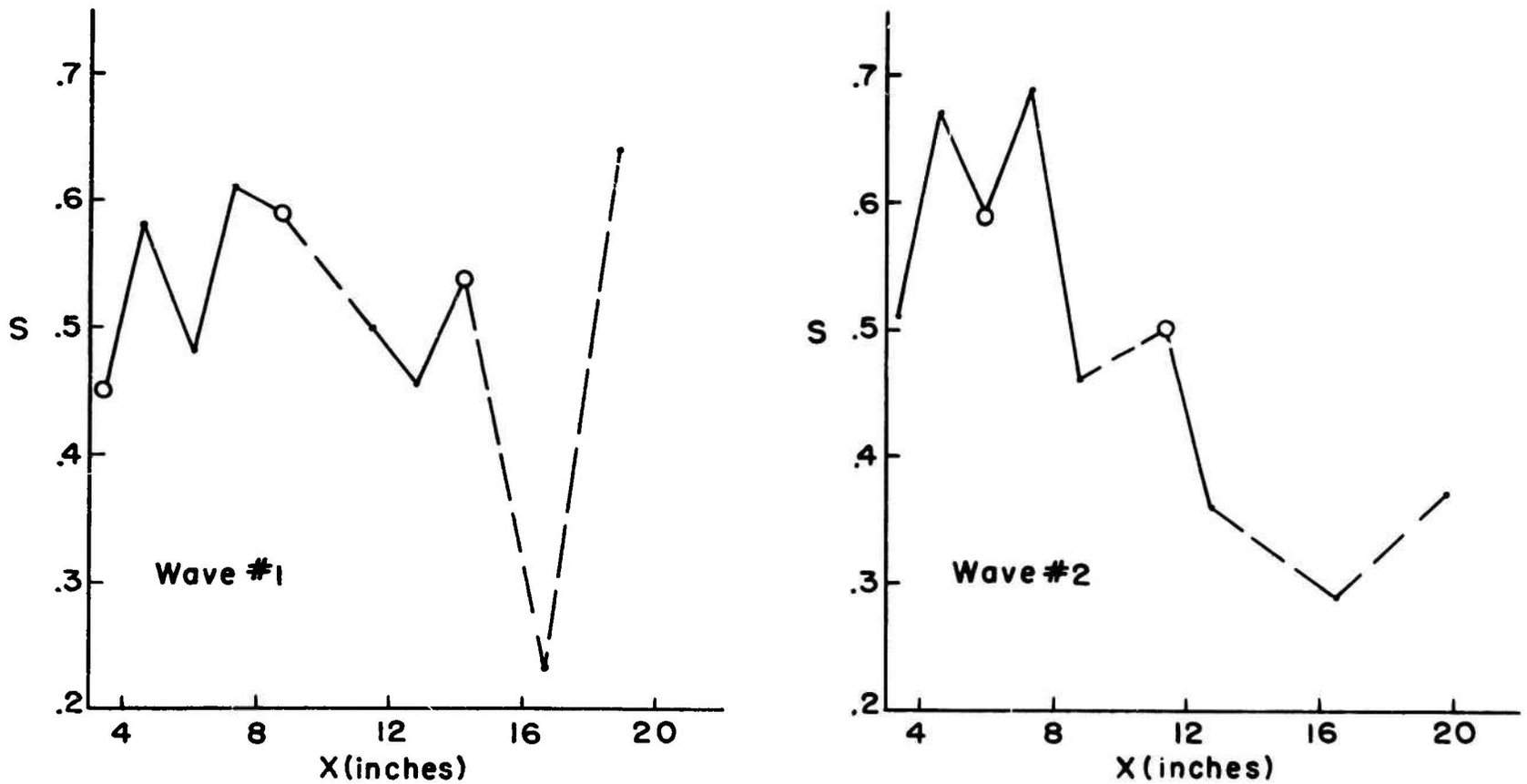

FIGURE 30 STRENGTH vs X PLOTS FOR TWO WAVES
(Exp. no. 4)

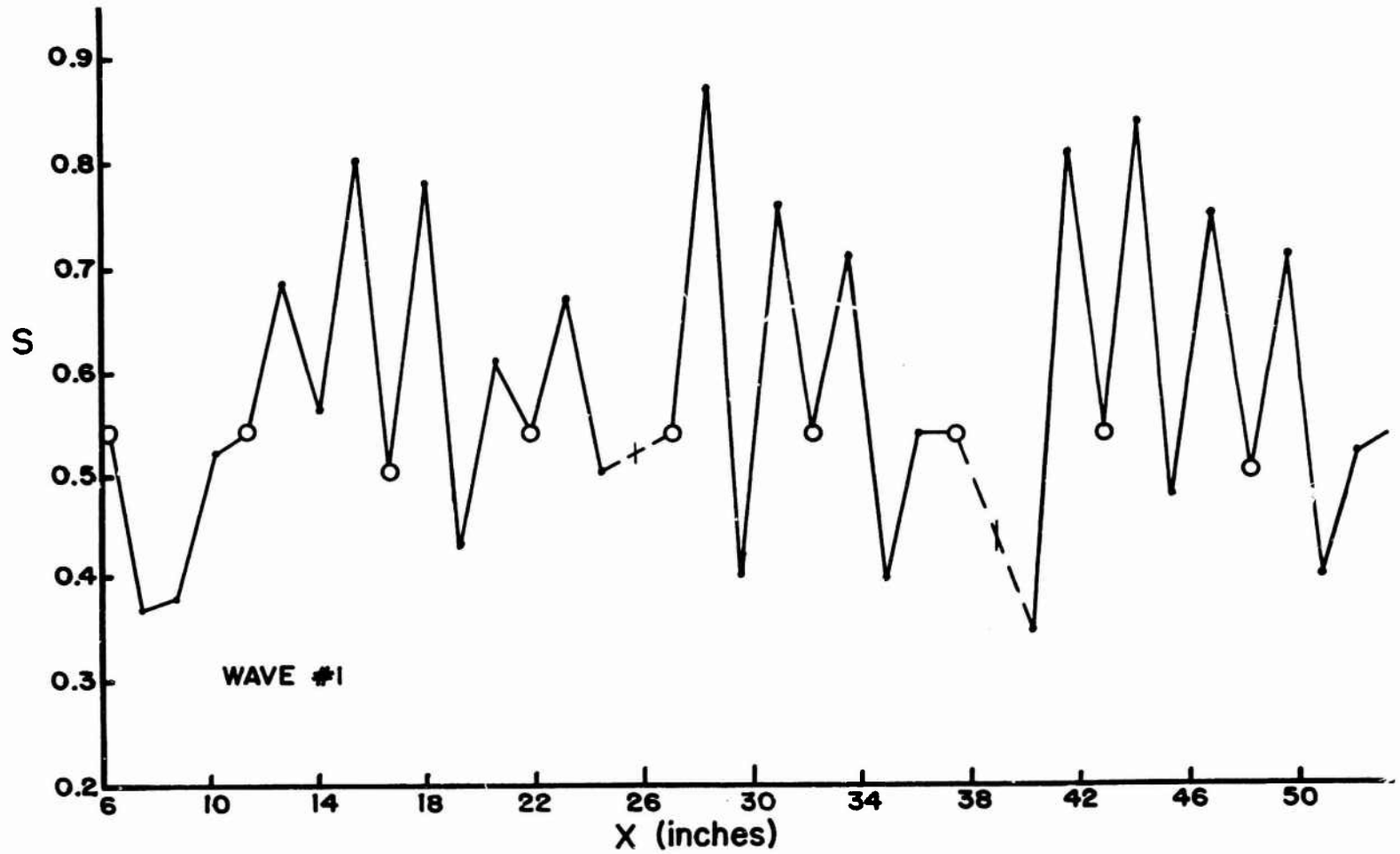

FIGURE 31 PLOT OF STRENGTH vs X (Exp. no. 5)

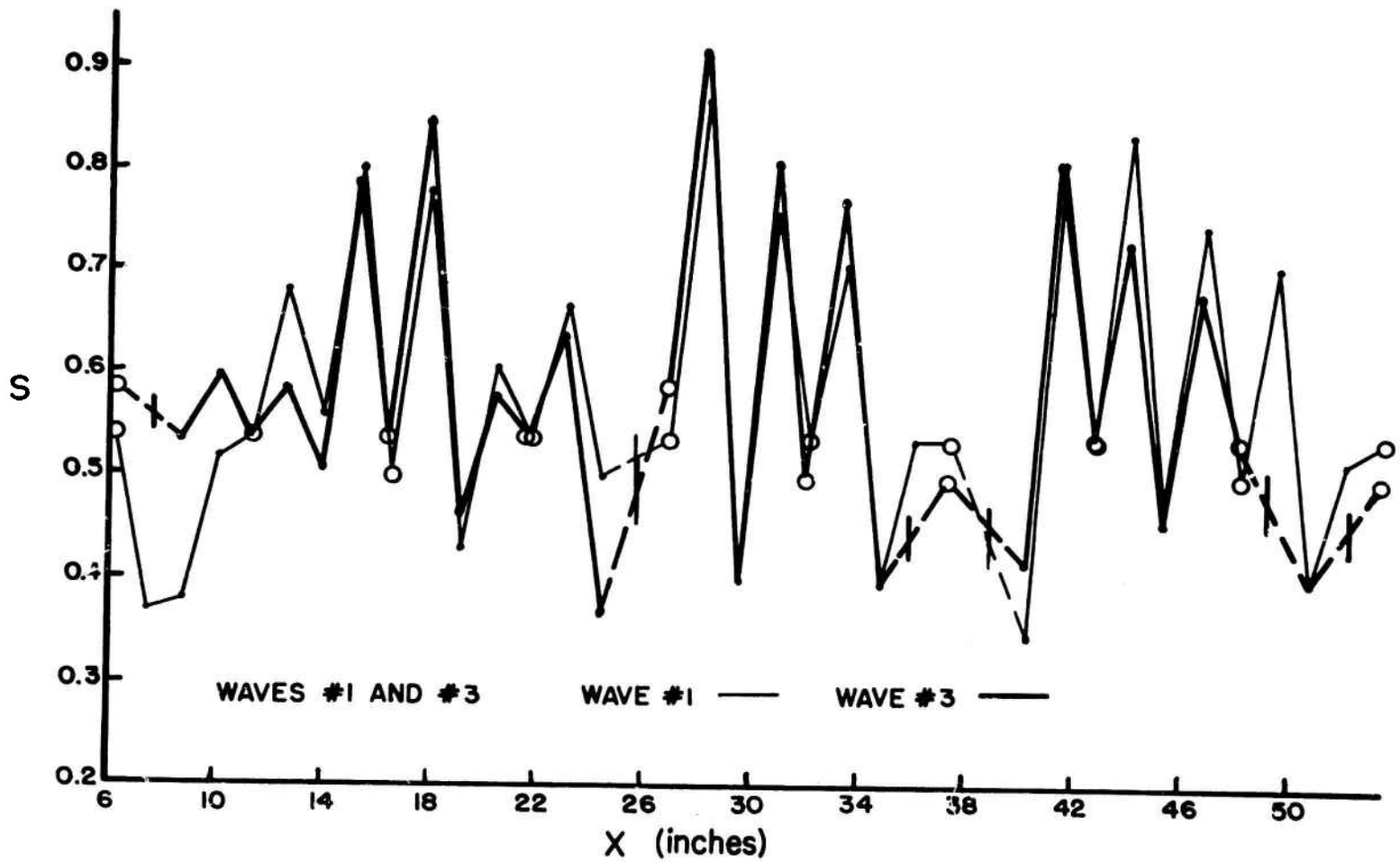

FIGURE 32 SUPERPOSITION OF TWO STRENGTH vs X PLOTS
(Exp. no. 5)

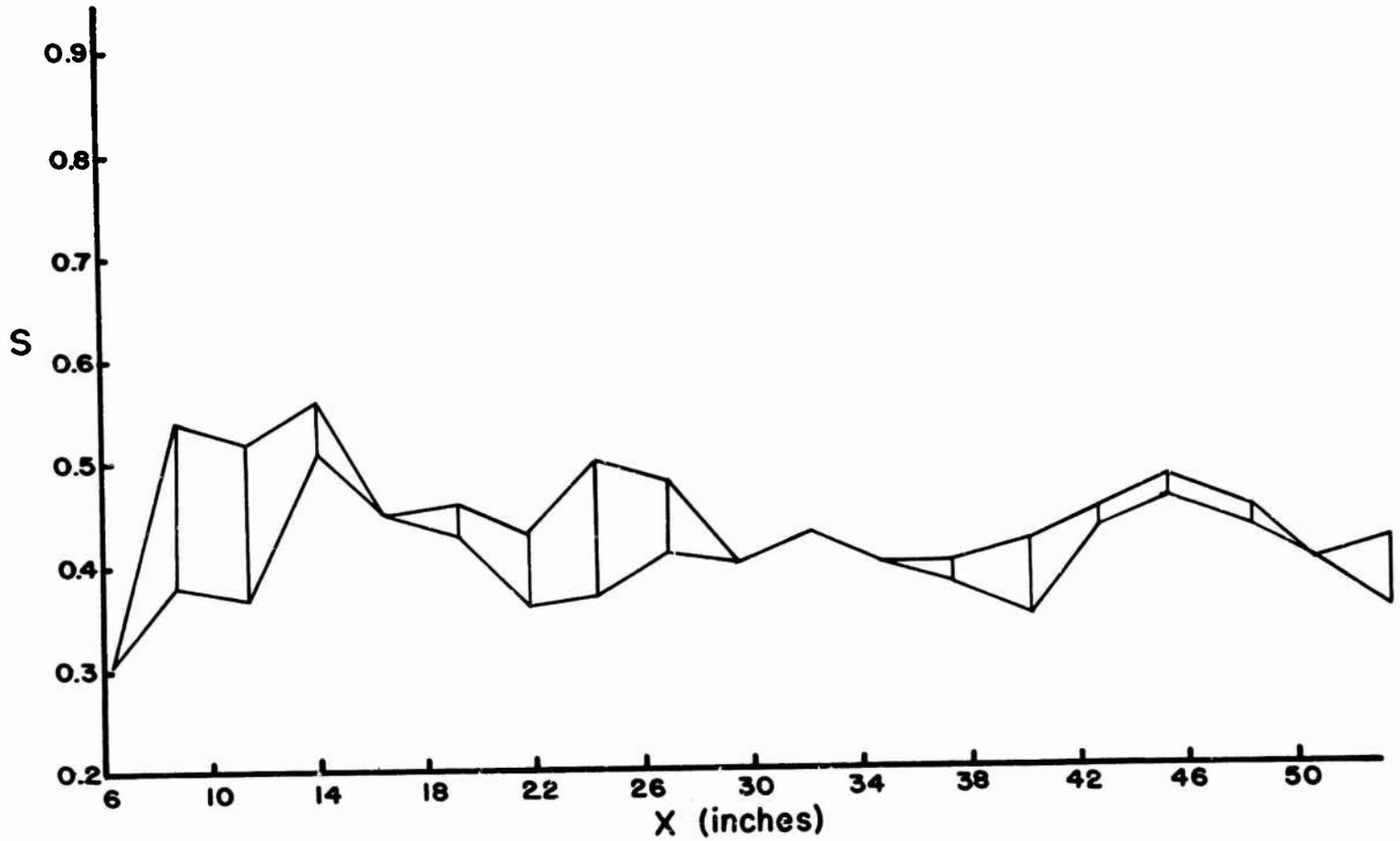

FIGURE 33 STRENGTH vs X FOR CENTERLINE INTERSECTIONS
(Exp. no. 5)

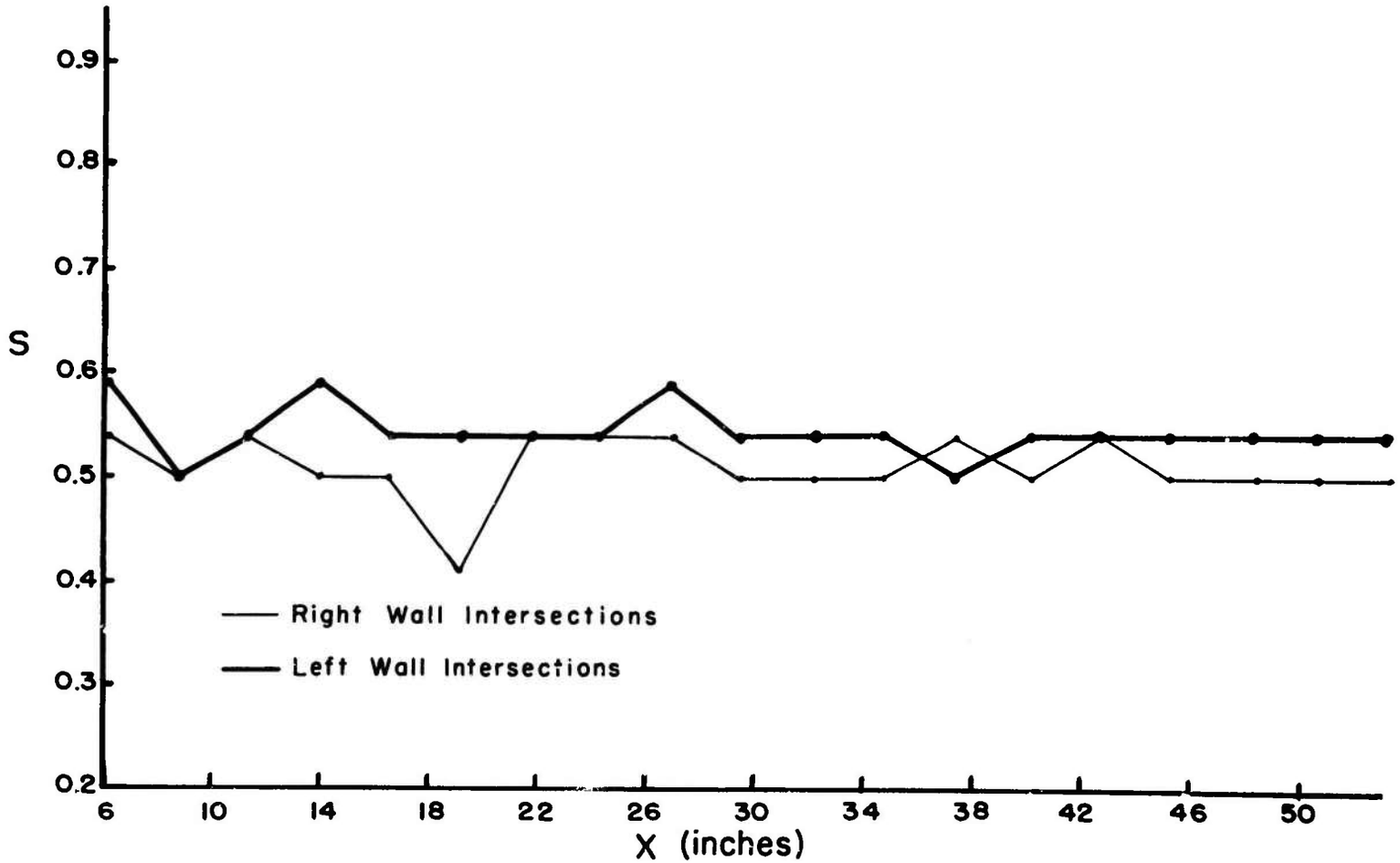

FIGURE 34 STRENGTH vs X FOR WALL INTERSECTIONS
(Exp. no. 5)

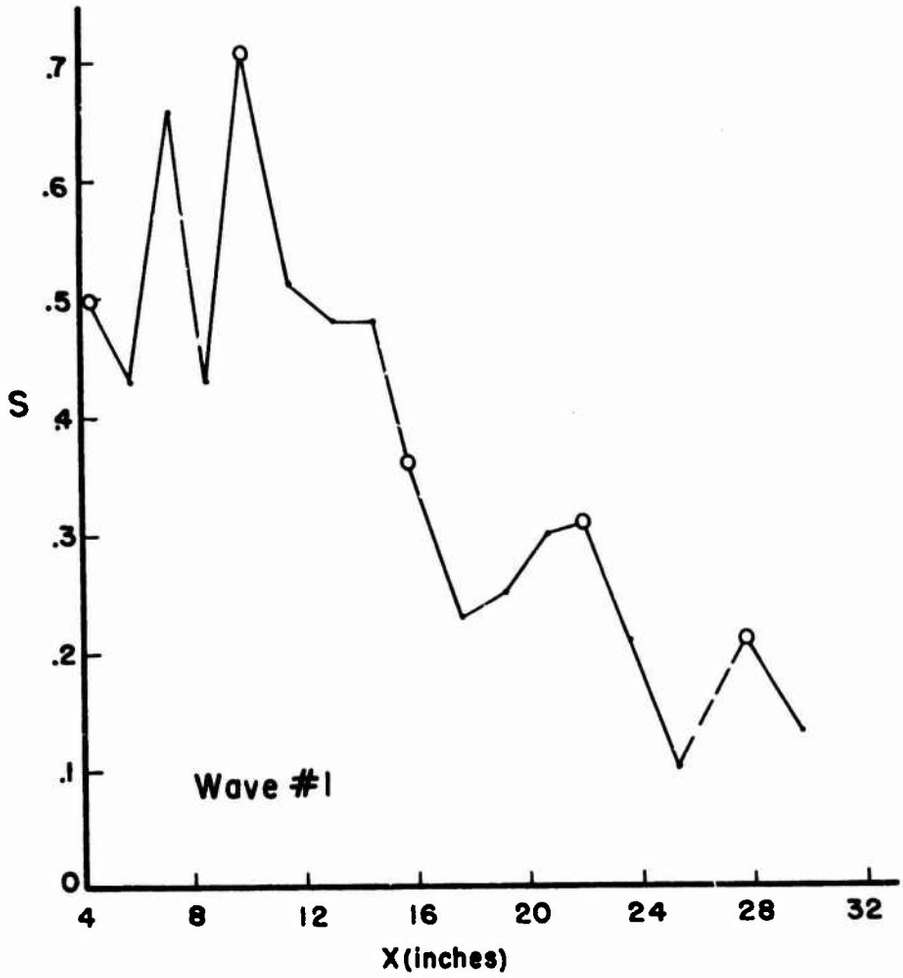

FIGURE 35 STRENGTH vs X FOR A WAVE DECAYING IN AN INERT GAS (Exp. no. 6)

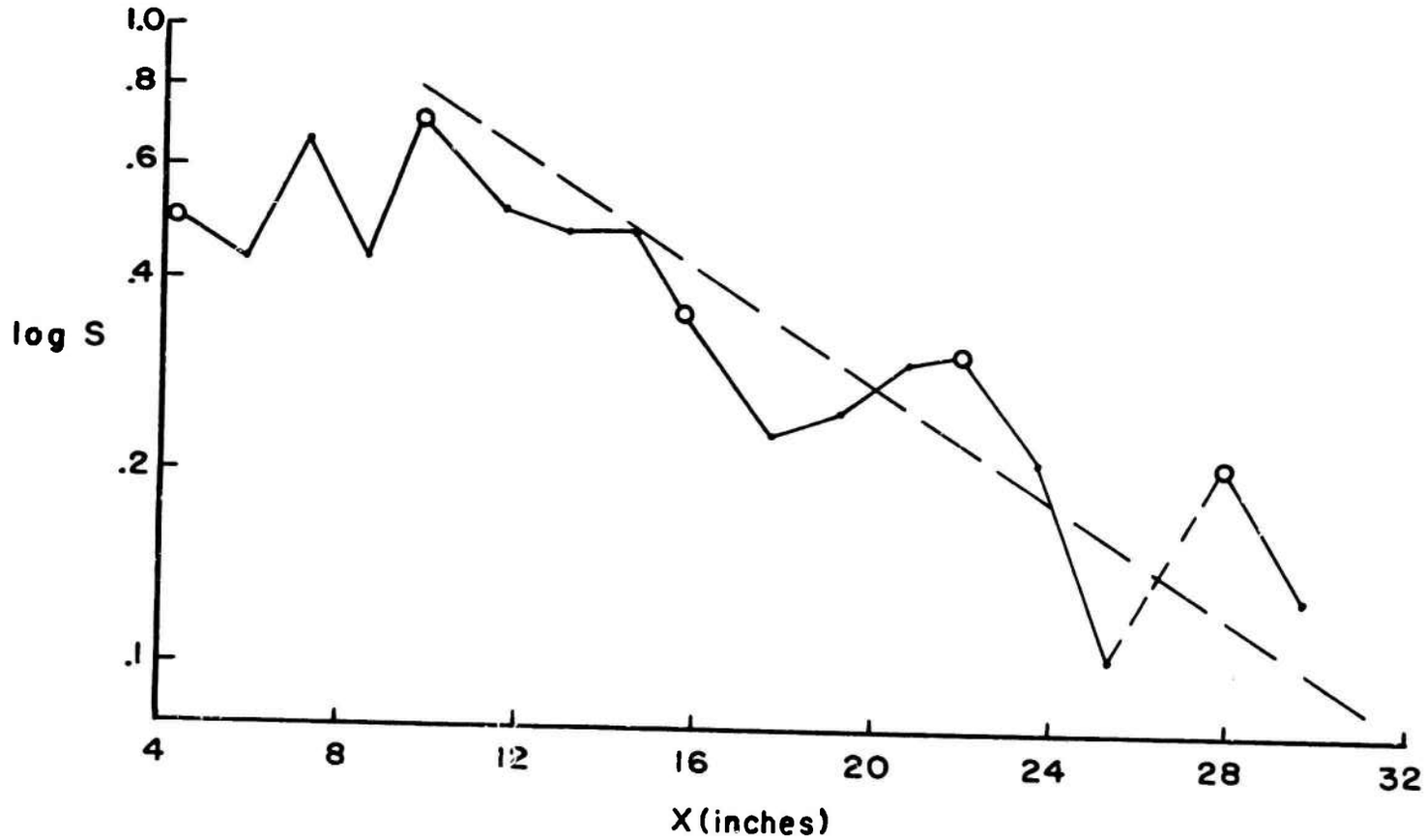

FIGURE 36 LOG S vs X PLOT FOR THE WAVE IN FIGURE 35

REFERENCES

1. Chapman, D. L., Phil. Mag., 213, Series 5, 47, 90 (1899).

2. Jouguet, E., Pure Appl. Math., 70, Series 6, 1, 34 7 (1905); 2, 1 (1906).

3. Rankine, W. J. M., Trans. Roy. Soc. (London), 160, 277 (1870).

4. Hugoniot, H., J. de lecole Polyt., 58, 1 (1889).

5. Campbell, C. and Woodhead, D. W., J. Chem. Soc., 3010 (1926); 1527 (1927).

6. Zel'dovick, Y. B., J. Exptl. Theor. Phys. (USSR), 10, 542 (1940).

7. Von Neumann, J., O.S.R.D. Rep. No. 549 (1942), Ballistic Research Laboratory File No. X-122, Aberdeen Proving Ground, Maryland.

8. Döring, W., Ann. Physik., 43, 421 (1943).

9. Antilok, K., Poggendorfs Annalen der Physik and Chemie, 230 sec. 2, 154, pp. 14-37 (1875).

10. Denisov, Yu. N. and Troskin, Ya. K., "Structure of Gaseous Detonations in Tubes", Zh. Tekhn. Fiz. 30, 450-459 (1960).

11. Duff, R. E., "Investigation of Spinning Detonation and Detonation Stability", Physics of Fluids, Vol. 4, No. 11 (November 1961).

12. Lundstrom, E. A. and Oppenheim, A. K., "On the Influence of Non-Steadiness on the Thickness of the Detonation Wave", University of California, College of Engineering (1968).

13. Crooker, A. J., "Convergent Channel Shock Tube for Detonation Initiation Studies", M.S. Thesis, University of Illinois (1965), Technical Report AAE 65-6.

14. Crooker, A. J., "Phenomenological Investigation of Low Mode Marginal Planar Detonations", Ph.D. Thesis, University of Illinois (1969), Technical report AAE 69-2.

15. Edwards, D. H., Parry, D. J. and Jones, A. T., "The Structure of the Wave Front in Spinning Detonation", J. Fluid Mech., Vol. 26, Part 2, (1966).

16. Engel, C. D., "Characteristics of Transverse Waves in Detonations of H_2, C_2H_2, C_2H_4, and CH_4-- Oxygen Mixtures", M.S. Thesis, University of Illinois (1967), Technical Report AAE 67-5.

17. Eyman, J. R., "A Simple Model for the Mechanism of Detonation", M.S. Thesis, University of Illinois (1966), Technical Report AAE 66-3.

18. Maurer, R. E., "A Real Gas Analysis Using an Acoustic Model for the Transverse Wave Spacing in Detonations", M.S. Thesis, University of Illinois (1966), Technical Report AAE 66-4.

19. Schott, G. L., "Observations of the Structure of Spinning Detonations", Physics of Fluids, Vol. 8, No. 5 (May 1965).

20. Steel, G. B., Report No. AS-66-4, University of California, Berkeley (1966).

21. Voitsekhovski, B. V., Mitrofanov, V.V., and Topchian, M.E., "The Structure of the Front of Detonations in Gases", (Izd-vo Sibirsk. Otdel. Akad. Nauk. SSSR, November (1963).

22. Watson, R. H., "A Comparison of Experimental and Theoretical Transverse Wave Spacings in Detonations", M.S. Thesis, University of Illinois (1966), Technical Report AAE 66-1.

23. Biller, J. R., "On the Strength of Transverse Waves and a Geometrical Detonation Cell Model for Gas Phase Detonations", M.S. Thesis, University of Illinois (1968), Technical Report AAE 68-4.

24. Adamczyk, A. A., "An Experimental Investigation of Generated Transverse Waves in Detonations", M. S. Thesis, University of Illinois (1969).

25. Fay, J. A., "A Mechanical Theory of Spinning Detonation", J. Chem. Phys., Vol. 20, No. 6 (June 1952).

26. Manson, N., "Propagation des Detonations et des Deflagrations dans les melanges gaseaux", L'Office National d'etudes et de Rechoiches, Aeronautiques, Paris (1947).

27. Strehlow, R. A. and Fernandes, F. D., "Transverse Waves in Detonations", Combustion and Flame, Vol. 9, No. 2 (June 1965).

28. Barthel, H. O. and Strehlow, R. A., "Wave Propagation in One-Dimensional Reactive Flows", Physics of Fluids, Vol. 9, No. 10, (October 1966).

29. Strehlow, R. A., "Multi-Dimensional Detonation Wave Structure", University of Illinois (1969), Technical Report AAE 69-3.