AD733698

Prepared Under Contract No. N00019-71-C-0178

for
Naval Air Systems Command
Department of the Navy

Reproduced by
NATIONAL TECHNICAL
INFORMATION SERVICE
Springfield, Va. 22151

UCLA-ENG-7172
October 1971

AN EXPERIMENTAL STUDY ON THE COMPRESSIVE BIAXIAL STRENGTH OF CERAMICS

George Sines

D D C
RECEIVED
DEC 13 1971
C

BEST AVAILABLE COPY

This document is approved for public release; distribution unlimited.

UNCLASSIFIED
Security Classification

DOCUMENT CONTROL DATA - R & D

(Security classification of title, body of abstract and indexing annotation must be entered when the overall report is classified)

1. ORIGINATING ACTIVITY *(Corporate author)*
Materials Department
School of Engineering
University of California
Los Angeles, California 90024

2a. REPORT SECURITY CLASSIFICATION
Unclassified

2b. GROUP

3. REPORT TITLE
An Experimental Study on the Compressive Biaxial Strength of Ceramics

4. DESCRIPTIVE NOTES *(Type of report and inclusive dates)*
First Annual Technical Report, 1 October 1970 to 31 October 1971

5. AUTHOR(S) *(First name, middle initial, last name)*
George Sines
Marc Adams

6. REPORT DATE
October 1971

7a. TOTAL NO. OF PAGES
52

7b. NO. OF REFS
24

8a. CONTRACT OR GRANT NO.
N00019-71-C-0178

b. PROJECT NO.

c.

d.

9a. ORIGINATOR'S REPORT NUMBER(S)
UCLA - ENG- 7172

9b. OTHER REPORT NO(S) *(Any other numbers that may be assigned this report)*

10. DISTRIBUTION STATEMENT
Approved for public release; distribution unlimited

11. SUPPLEMENTARY NOTES

12. SPONSORING MILITARY ACTIVITY
Naval Air Systems Command
Department of the Navy
Washington, D.C. 20360

13. ABSTRACT
The factors in the testing of very brittle materials which can prevent the true strength from being realized are identified. The testing concepts developed in a previous study on the compressive-tensile strength of ceramics are extended to the design of biaxial compressive tests. An externally pressurized, closed end, cylindrical specimen is used to attain 2:1 biaxial compression. The first of a series of planned tests has been performed and 585,000 psi was measured for the 2:1 biaixal compressive strength of an alumina. This is 31% higher than the uniaxial compressive strength. A description of the testing equipment is given. Two analyses are presented. One deals with the buckling characteristics of the test specimen. The other presents the compliance analysis used to design a 1:1 prestressing fixture.

DD FORM 1 NOV 65 1473 (PAGE 1)
0102-014-6600

UNCLASSIFIED
Security Classification

UNCLASSIFIED

Security Classification

14. KEY WORDS	LINK A ROLE	LINK A WT	LINK B ROLE	LINK B WT	LINK C ROLE	LINK C WT
Ceramics						
Biaxial Strength						
Alumina						
Compression Testing						
Compressive Strength						

DD FORM 1 NOV 65 1473 (BACK)
(PAGE 2)

UNCLASSIFIED

Security Classification

UCLA-ENG-7172
October 1971

AN EXPERIMENTAL STUDY ON THE COMPRESSIVE BIAXIAL STRENGTH OF CERAMICS

by

George Sines

Prepared Under Contract No. N00019-71-C-0178

for

Naval Air Systems Command

Department of the Navy

Materials Department
School of Engineering and Applied Science
University of California
Los Angeles, California

This document is approved for public release; distribution unlimited.

FOREWORD

This work was performed by the Materials Department, School of Engineering and Applied Science, University of California, Los Angeles, California under Contract No. N00019-71-C-0178 with the U.S. Department of the Navy. Work was administered under the direction of the Naval Air Systems Command. Mr. Charles F. Bersch was the project monitor.

This report covers work conducted between 10 October 1970 and 30 September 1971. Personnel responsible for carrying out the research were George Sines and Marc Adams.

The manuscript was released by the author October 1971 for publication as the first annual report.

ABSTRACT

The factors in the testing of very brittle materials which can prevent the true strength from being realized are identified. The testing concepts developed in a previous study on the compressive-tensile strength of ceramics are extended to the design of biaxial compressive tests. An externally pressurized, closed end, cylindrical specimen is used to attain 2:1 biaxial compression. The first of a series of planned tests has been performed and 585,000 psi was measured for the 2:1 biaxial compressive strength of an alumina. This is 31% higher than the uniaxial compressive strength. A description of the testing equipment is given. Two analyses are presented. One deals with the buckling characteristics of the test specimen. The other presents the compliance analysis used to design a 1:1 prestressing fixture.

CONTENTS

Foreword

Abstract

Introduction 1

Current Study at UCLA 6

Testing Equipment 6

Specimens 6

Testing Procedure & Results 7

Discussion 10

Griffith Models 10

Statistical Consideration 12

Other Biaxial Compressive States 13

Conclusion 15

References 16

Appendix 17

(A) Apparatus Development 18

(B) An Investigation of the Buckling Tendencies in the Test Specimen 22

(C) Analysis of the Prestressing Fixture for the 1:1 Stress State 28

ILLUSTRATIONS

Figure		Page
1	Specimen Assembly for 2:1 biaxial compression	5
2	Data point for 2:1 test normalized by Sedlacek's uniaxial compression data	9
3	Schematic of specimen and axial loading device to achieve 1:1 biaxial compression in an isostatic press	14
A-1	Testing facility	21
B-1	Test Specimen	
B-2	Critical Buckling Pressure vs. Specimen Length	26
C-1	Prestress fixture model	29
C-2	Bolt preload parameter vs. compliances	33
C-3	Dimensioned prestress fixture model	34
C-4	Prestress fixture	35

MEASUREMENT OF BIAXIAL COMPRESSIVE STRENGTH OF CERAMICS

George Sines and Marc Adams

Materials Department
School of Engineering
University of California
Los Angeles, California

Introduction

There is need to know accurately the strength of ceramics under biaxial stresses, both to distinguish between competing theories of strength and to provide information for designers. Potential design applications range from biaxially prestressed hypersonic airfoils[1,2] to domed structures beneath the sea[3]. Without accurate values for the strength, it is impossible to know from a test of a component or a structure whether the design has permitted the full utilization of the materials strength[4].

Testing brittle materials is difficult because an inadvertent localized high stress can cause fracture of the test specimen, thereby giving a false, low value for the strength. Some sources of inadvertent stresses for an axially compressively loaded specimen are the disparities on the surfaces of the specimen's ends which contact the loading block of the testing machine, and stress concentration at the transition from the butt section either from too small a radius or lack of smoothness at the point of tangency.

Also care must be taken that bending stresses are not inadvertently introduced[5]. When the loading blocks are rigidly guided to prevent rotation, their surfaces must be parallel and the ends of the specimens equally so. A very small deviation from being parallel can cause bending so that premature failure is caused by the added compressive stress. The bending can easily be great enough to cause a net tensile stress and premature failure from it.

One method used to prevent the application of bending moments is to abandon the precisely guided parallel surfaces and use a flexible load train. This can be accomplished by a spherical joint; however, such a joint is usually made completely ineffective by friction between the mating surfaces. Therefore, the surfaces must be separated by a pressurized fluid layer[6]. An air bearing has been developed and successfully used[7], but it is a rather complicated device. Another approach that removes many of the complications is to use a long load train and to replace the bearing by knife edges[8].

The knife edges could be replaced by flexure plates in order to increase the capacity and still retain the benefits of the flexible load train.

Although the load train may be completely flexible, a moment can be applied to the test section if the line of load is not concentric with the axis of the test section. A surprisingly small eccentricity can cause significant bending stress. Concentricity can be assured by careful gaging. Fortunately, electric resistance strain gages can be used to measure the stresses and until one is convinced that the apparatus and techniques successfully eliminate bending, each specimen should have a minimum of three equally spaced, longitudinally oriented, strain gages measuring the stress in the test section.

Most of the difficulties posed by the uniaxial loading of a brittle specimen with a reduced cross-section are avoided by the tensile ring and compressive ring tests developed by Sedlacek[9,10,11]. For the compressive test a uniform fluid pressure is applied to the external surface of a ring by a rubber bladder. The problems of sealing the ends and eliminating the longitudinal stress have been solved. In the ring tensile test, the fluid pressure is applied to the internal surface through a rubber bladder. Some of the advantages are: no intense localized stresses from the hard steel contacting disparities on the specimen, no stress concentrations at fillets between the test section and loading area, and no possibility of eccentric loading or applied moments. A typical ring 2" dia. and 0.10" wall when used to measure the compressive strength of high quality ceramics does require a pressure source of 60,000 psi, but this is

now commercially available. Isostatic presses are often available in ceramics laboratories and it is possible to modify the ring apparatus so that it is inserted into the isostatic pressure chamber[12]. Then only more accurate calibration of the pressure measuring device may be needed.

In a previous study of the biaxial tensile-compressive strength of a ceramic[13], a specimen was developed consisting of a cylindrical specimen similar to that shown in Figure 1. It was internally pressurized by a liquid in a rubber bladder and an axial compressive load was applied by a conventional testing machine. In that study, care was taken to measure all the above mentioned inadvertent stresses by strain gaging each specimen and then if necessary, to reduce them to negligible values by precise adjustments of the equipment. The compliance tubes B minimize bending caused by the lateral constraint of the loading blocks against the Poisson radial displacement of the specimen. This specimen was used in studies on zirconia in which very reproducible data were obtained[13].

Some thought was given to a similar arrangement for biaxial compression-compression testing using external pressure and an axial load but the sealing problems are substantial. Many difficulties can be avoided if the biaxial compressive stress is attained by externally pressurizing a hollow, closed-end cylinder; however, this does limit the stress ratio to 2:1. To attain other stress states, a method is proposed below to apply additional axial loads by a device entirely contained in the pressure chamber.

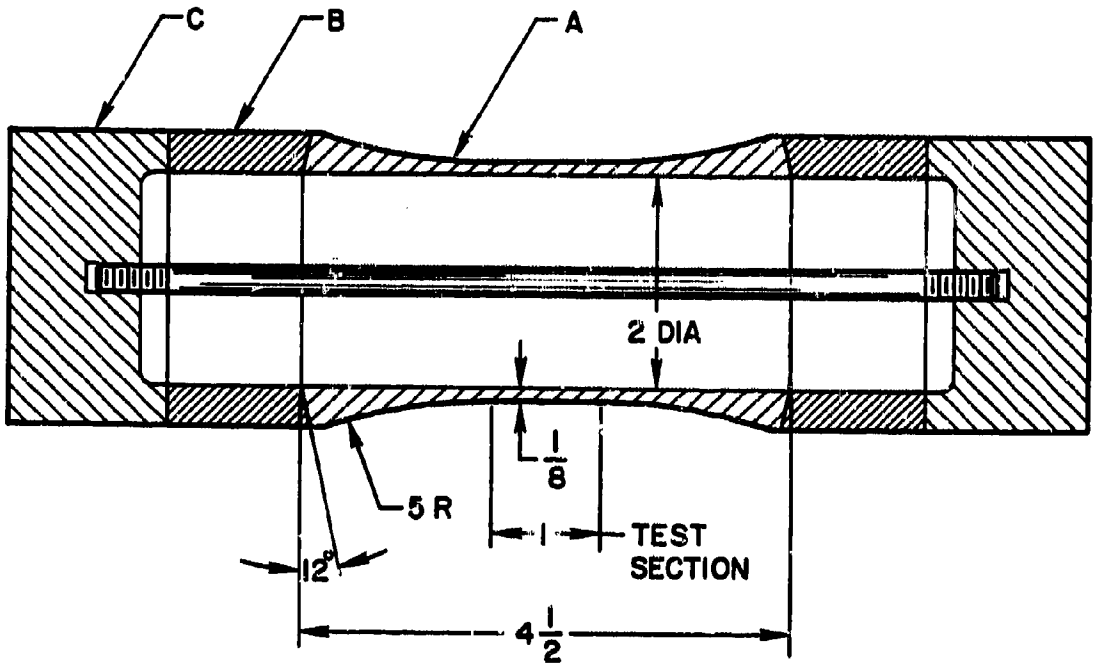

Figure 1. Specimen assembly for 2:1 biaxial compression (inches).

CURRENT STUDY AT UCLA

Testing Equipment

An isostatic press capable of pressurizing up to 100,000 psi a chamber 5" in diameter by 60" long was obtained. It was instrumented for precision pressure measurement by a recording Foxboro bulk modulus cell, a Heise precision Bourdon tube gage, and an electric resistance strain gage installed in the circumferential direction on the exterior of the cylindrical vessel. *

Specimens

The specimen assembly shown in Figure 1 consists of three parts—two compliance tubes B and a central tube A with a reduced cross-section. The reduced test section is a cylinder, 2" internal diameter, 1" long with a 1/8" wall thickness. Calculations showed that this specimen should not buckle under the anticipated loading. **

The specimens were manufactured by Western Gold and Platinum (WESGO) of Belmont, California from their isostatically pressed alumina designated by them as AL 995. Sedlacek measured[10] a density of 3.75 g/cc and 18 micron gram size on his samples produced under the same specifications.

The finish was made with a grinding wheel containing #200 grit diamond and the final cut was less than 0.002". Sedlacek[11] studied the finishing of alumina and found that no improvement in surface finish is obtained from the use of finer grit and that limiting the cut to 0.002" prevents damage.

---

* This apparatus is described in detail in Appendix A. A photograph of the apparatus is presented there.

** These calculations of the buckling are presented and discussed in Appendix B.

In the laboratory, the end caps C were lapped to the compliance tubes B with levigated alumina powder. The conical contacting surfaces between the compliance tubes and the specimen were lapped with 1 micron diamond grit having a medium distribution. During lapping, the tubes and specimen were placed on a 2" dia. steel bar, and rotated against each other so that the conical surface would remain conical and concentric with the test section. Lapping was continued until radial lines drawn on the surfaces with a hard pencil were removed uniformly.

Test Procedure and Results

The specimen and two compliance tubes were placed upon an end cap and the internal space was filled with flexible plastic bags containing plasticine so that shock to the apparatus from the imploding specimen would be minimized. An empty space of about 1 cubic inch was left to prevent internal pressure being created by the plasticine. The other end was then placed on top and the assembly fixed together by the central threaded rod.

A tube of expanded polyolefin plastic having a 3" dia. and 0.025" thick was put over the assembly and it was placed in an oven at 250°F for 1 hour. This plastic has the property of shrinking 50% in the circumferential direction by this treatment so the tube shrank to tightly fit the contour of the specimen. The ends of the tube were sealed to the end caps by vinyl tape.

The specimen assembly sealed in plastic was inserted into the chamber of the isostatic press and the pressure raised over a 10 minute period until fracture occurred. Fracture was indicated by a small sharp noise and by a sudden drop of measured pressure. The specimen failed at a fluid pressure of 61,800 psi which gives a calculated circumferential stress of 585,000 psi and an axial compressive stress of 292,000 psi. It is assumed that failure initiated at the pressure-free internal diameter where, according to the formula for thick-walled cylindrical pressure vessels, the stress is the highest. Therefore, the radial stress is zero at the origin of fracture.

The test section of the specimen was pulverized.

In Figure 2 is shown a previous conservative speculation[14] on the strength of ceramics under biaxial compression. Notice that the new data point falls beyond the predicted curve. The value is 31% greater than the uniaxial compressive strength.

Sedlacek's value of the uniaxial compressive strength, 448,000 ksi with a standard deviation of 36,000 determined from 12 test specimens was used for comparison because his ring specimens were made by the same manufacturer to the same specification[10] as the biaxial specimen. Moreover, the dimensions of his ring specimen differ only slightly from those of the test section of the biaxial specimen. Specimens from the same batch as the biaxial have been set aside and will be tested in uniaxial compression in order to make a closer comparison.

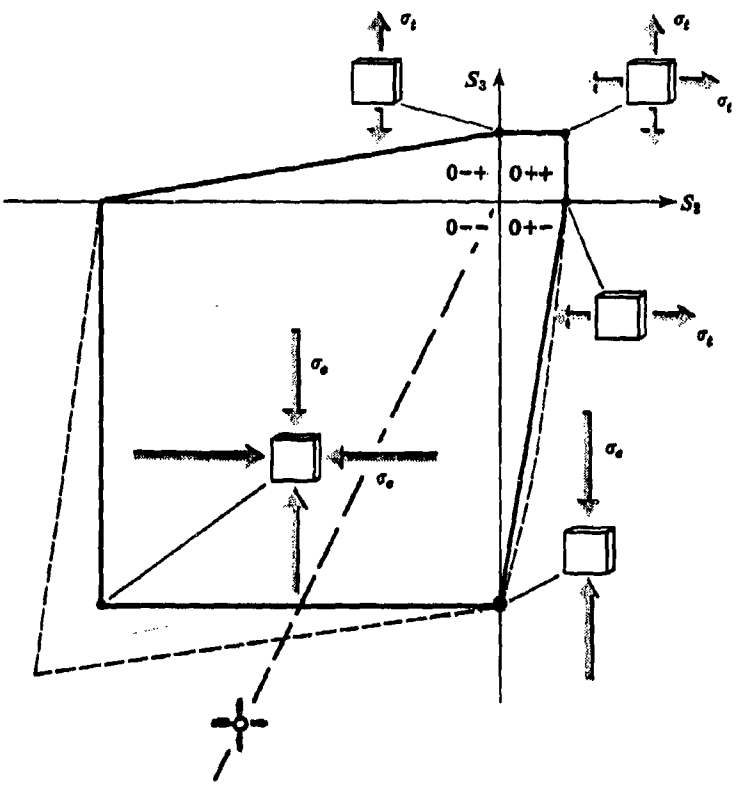

Figure 2. Data point for 2:1 test normalized by Sedlacek's uni-axial compression data.

Discussion

Griffith Models

The Griffith flaw theory[15] and several extensions of it[16,17] have been successful in predicting the strength of ceramics under a number of stress states. Further extension may explain the increased strength measured under biaxial compression.

A Griffith model for ceramics might comprise three-dimensionally, randomly oriented penny-shaped cracks (flat oblate ellipsoids of revolution) in an infinite elastic continuum separated so that their stress fields are independent of each other. The Griffith theory of 1924 states that fracture occurs when the localized tensile stress at or near the periphery of a flaw exceeds a critical value characteristic of the material. This model is so difficult to analyze that it has yet to be done; however, a simpler model may have as much physical significance. If a free surface cuts a penny-shaped crack, the stresses near the tip are higher than if the crack had been in the interior. The stresses at the tip on the free surface are nearly the same as those for an elliptical cylinder of the same cross-section; therefore, it is physically reasonable to use a model having cylindrical, elliptical flaws and take advantage of the resulting mathematical simplification.

Under uniaxial compression, the critical flaw is one whose cylindrical axis is perpendicular to the stress and whose major axis is inclined about 30 deg. to it. An added compressive stress transverse to the other compressive stress and perpendicular to the flaw cylindrical axis reduces the local tensile stress at the tip and analysis shows that the Griffith parabola extends into the biaxial compression quadrant;[18]

thereby predicting strengths much higher than the uniaxial compressive strength. On the other hand, for cracks whose cylindrical axes are parallel to the lesser compressive stress, no such benefit occurs and the biaxial strength predicted is the same as the uniaxial.

More careful analysis shows that the biaxial strength should be between these two extremes. An interior penny-shaped crack corresponding to the latter orientation has less stress concentration than the corresponding cylindrical elliptical one and therefore failure would not occur at its tip until higher stresses are applied. If flaws of this orientation are cut by the free surface, then they will be cut at an angle making the projection of the tip radius a larger radius thereby giving less stress concentration. Analysis of these two effects shows a reduction of the localized stress by about 30%;[19] this results in a predicted biaxial strength this much above the uniaxial. In agreement with the prediction, our first experimental value was 31% above the uniaxial. A more quantitative analysis is needed to construct the failure envelope in stress space.

Statistical Consideration

Ceramic specimens that have been carefully fabricated and carefully tested may not exhibit the extreme scatter in measured strength commonly thought inherent to ceramics. Tests by Babel and Sines[13] on zirconia for 3 stress states on 4 batches of specimens gave coefficients of variation having a low of 0.041, a median of 0.068, and a high of 0.136. Tests by Sedlacek[9, 10, 11] on alumina under tension gave coefficients of variation having a low of 0.024, a median of 0.042, and a high of 0.074 and one group under compression gave a coefficient 0.080.

Our current batch of specimens, the first made for this study, consists of 13; 12 now remain to be tested. This number will permit several-fold replication of the 1:0, 2:1, and 1:1 ~~biaxial compression~~ tests. On the basis of the results on these 13 specimens, the degree of replication needed will be decided and a larger batch made. The tests will be confined to the three stress states in order to permit easier statistical evaluation.

Other Biaxial Compressive States

In future tests a 1:1 compressive stress state will be achieved by superposing the stresses from an axial load onto those caused by fluid pressure. A sketch of the loading device is shown in Figure 3. A large bolt D passes through the assembly of specimen A and compliance rings B. Tightening nut E applies a compressive load through sleeve F to the compliance ring. The assembly is then sealed in plastic and subjected to increasing external fluid pressure until failure occurs. Vessel G prevents the fluid pressure from being applied to the nut end of the prestressing assembly; otherwise, most of the axial load from the fluid pressure would be assumed by the bolt and not by the specimen.

Bolt D and sleeve F are elastically soft compared to the specimen in order to minimize the change in preload caused by the longitudinal elastic shortening of the specimen from the stresses caused by the fluid pressure. Calculation shows that this relaxation will be about 10%. *Depending on the amount of axial preload introduced, any biaxial compressive stress state from 2:1 to 1:1 can be obtained.

---

* The detailed analysis of preload relaxation is presented in Appendix C. A drawing of the current detailed design is also presented.

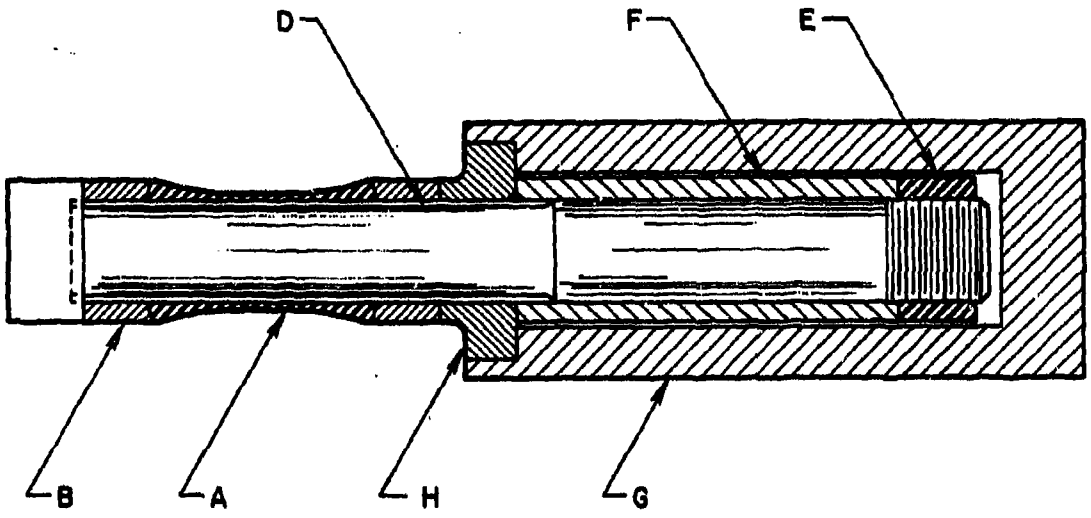

Figure 3. Schematic of specimen and axial loading device to achieve 1:1 biaxial compression in an isostatic press.

Conclusion

The experimental value of the strength of a brittle material is often far below the material's true strength; imperfect testing technique gives only lower values, never higher. The measured 2:1 biaxial compressive strength of 585,000 psi is an indication of the potential strength of ceramics that might be attainable in structures if careful fabrication techniques and appropriate design philosophies are developed.

Acknowedgement

This work was performed under contract to the Naval Air System Command: Charles F. Bersch is the project's technical monitor.

References

1. Shanley, F.R. and Knapp, W.J., J. Structural Div. Proc. Am. Soc. Civil Engrs., 91, 47 (1965).

2. Knapp, W. J. and Shanley, F.R., Aero/Space Engr. 17, 34 (1958)

3. Stachiw, J.D., Ceramic Age, 80, 20 (1964).

4. Bersch, C.F. "Properties of ceramics for structural and/or high temperature use: need for control, measurement,and compilation". National Bureau of Standard Special Publication 303, (1968).

5. Rudnick, A., Marschall, C.W., Duckworth, W.H. and Emrich, B.R., The evaluation and interpretation of mechanical properties of brittle materials, AFML-TR-67-316 and DCIC 68-3, April 1968.

6. Schwaninger, O., Proc. Institution of Mechanical Engrs., 180, Part 3A, 380 (1965-66).

7. Pears, C.D. and Digesu, F.S. ASTM Proc. 65, 855 (1965).

8. Owen, J.B.B., Proc. Institution of Mechanical Engrs., 180, Part 3A, 411 (1965-66).

9. Sedlacek, R. and Halden, F.A., Rev. Sci. Instruments 33, 298 (1962).

10. Sedlacek, R., Investigation of elasticity and strength of ceramics subjected to tensile and compressive loads , AFML-TR-68-231, August 1968.

11. Sedlacek, R., Processing of ceramics-surface finishing studies,Report of Stanford Research Inst. contract Navy N0019-69-C-0229, April 1970.

12. Robinson, J.N., Tensile test apparatus for brittle materials, Guest, Keen, and Nettlefolds Group Technological Centre, Wolverhampton, England, Report 1193, March 1971.

13. Babel, H.W. and Sines, G., Journal of Materials, 3, 134 (1968).

14. Sines, George, Elasticity and Strength, Allyn and Bacon, Boston p. 71 (1969).

15. Griffith, A.A., Proc. of First Int. Congress for Applied Mechanics, Delft 55, (1924).

16. McClintock, F.A. and Walsh, J.B., Proc. of the Fourth U.S. National Congress of Applied Mech., 1015 (1962).

17. Babel, H.W. and Sines,G., J. of Basic Engr., ASME, 285 (June 1968).

18. McClintock, F.A. and Argon, A.S., Mechanical Behavior of Materials, Addison-Wesley, Reading, p.492 (1966).

19. Neuber, H., Kerbspannungslehre, Springer, Berlin (1937).

APPENDIX

APPENDIX A

APPARATUS DEVELOPMENT

An isostatic press was obtained from government surplus to supply the high fluid pressure needed for the tests. The press was made by the Willammette Iron and Steel Company for the Jet Propulsion Laboratory in 1962. The pressure vessel was constructed from an 8" naval gun made in 1945 by the Crucible Steel Company. The bore of the gun had been sleeved down to a 5" diameter and the gun cut and plugged to make a chamber 60" long. The vessel was proof tested to 120,000 psi and rated to operate at 100,000 psi.

The appratus had been stored without proper prior cleaning since February 1967 necessitating extensive cleaning and checking of the pumps, reservoirs, and lines. No corrosion damage was found but in some sumps the fluid had polymerized and was difficult to remove. Although many filters are in the lines, fresh fluid is used for each pressurization because a minute quantity of dirt could score the bore of the intensifier. This is feasible because only a small quantity of fluid is needed. Blocks have been machined to fill most of the interior volume of the vessel to minimize the quantity of pressurized fluid and its stored energy thus decreasing the hazard in case of rupture.

In the original installation at the Jet Propulsion Laboratory the operator was protected from possible failure of the vessel by a 6-inch wall of reinforced concrete. The current installation has a wall consisting of 3" of wood, 24" of sand bags and 3" of wood protecting the operation. This provides more protection by its greater weight per unit area of wall.

In addition to the remote reading Foxboro bulk modulus cell for precision measurement of pressure, a precision Heise mechanical pressure gage was installed. It has a special mechanism to protect it from damage

upon sudden release of pressure. The gage is also equipped with a follower pointer so that an indication of the maximum pressure attained in the test is retained on the gage after failure. A third independent precision indication is by a strain gage attached on the outside of the vessel and oriented in the circumferential direction. These are continually monitored during the test. A conversion chart based upon the calculation of the strains in thick-walled cylindrical pressure vessels converts the strain gage readings to pressures. The Heise gage and the Bourdon tube gages which indicate the pressures of supply and drive fluid to the intensifier are read through a telescopic periscope.

Rupture diaphragms for 80,000 psi are now installed on the high pressure line. This limits the operating pressure to 2/3 of the proof pressure of 120,000 in conformance with conservative practice.

The method to control the high pressure is by a throttle by-pass valve on the primary pressure drive of the intensifier. In the original apparatus this valve was turned by a geared-down electric motor whose switch was in the protected area. This motor drive was replaced by a flexible cable running to a hand wheel in the protected area. This provides much finer control and avoids the possibility of over-pressurization in the event of a motor switch failure.

One of the difficulties encountered in re-establishing the apparatus was providing a sufficient flow and pressure for the air supply to the Sprague pneumatic pump that provides the input to the secondary pressure system for the intensifier. Three different air supply systems were tried before a sufficient supply was attained.

Most of the difficulties encountered in restoring the isostatic press involved automatic devices needed for use of the press in production. Most of these were replaced by simple mechanical systems of higher reliability

because the time they would save in pressurizing the limited number of specimens is small compared to the time wasted in making repairs. A photo of the press as installed and instrumented at UCLA is shown in Fig. A-1.

The apparatus is now working reliably without leaks. The three independent precision means of measuring pressure all give the same pressure indication within their range of accuracy.

G. Sines
October 1971

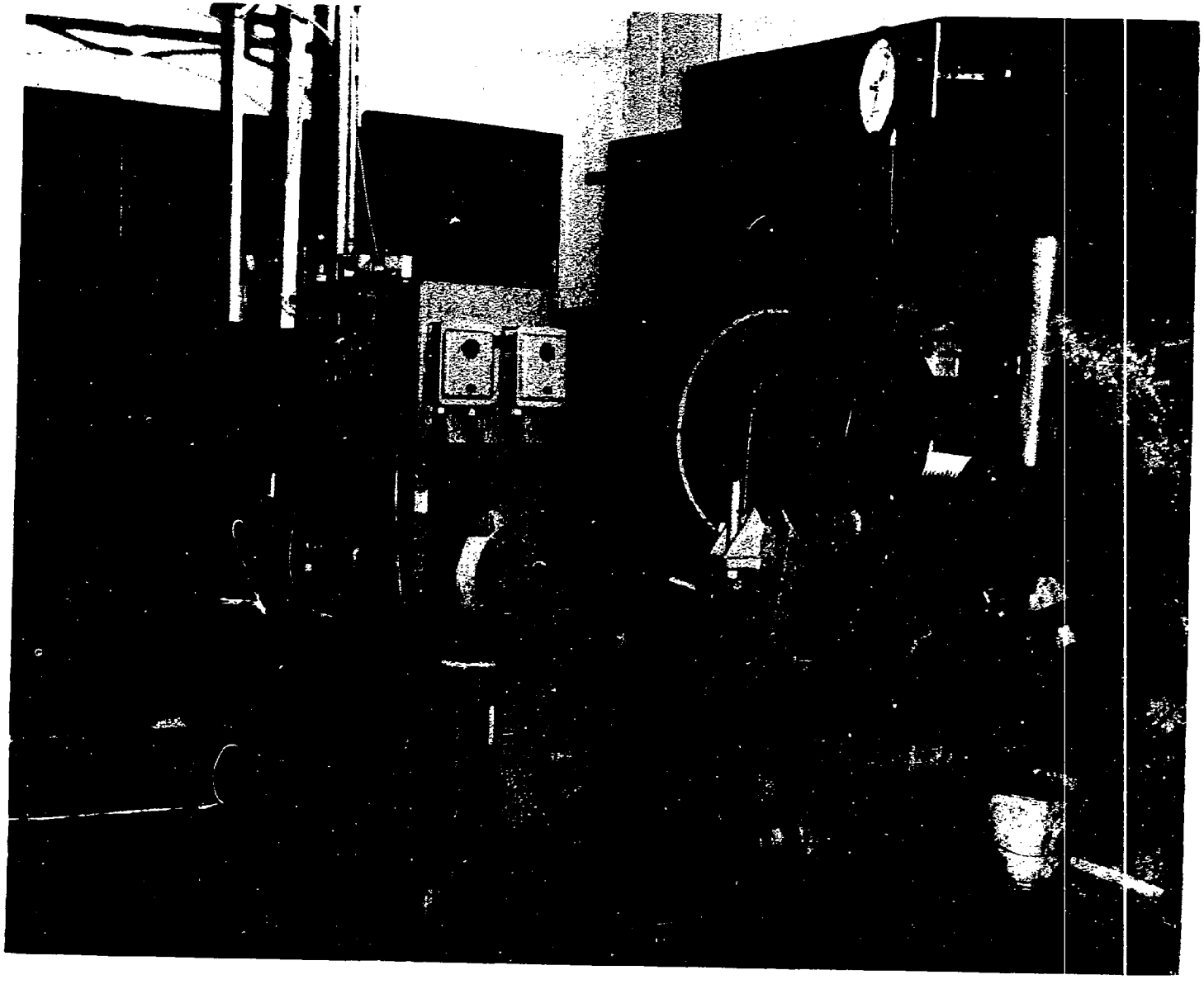

Fig. A-1

APPENDIX B

AN INVESTIGATION OF THE BUCKLING TENDENCIES IN THE TEST SPECIMEN

The buckling characteristics of the test specimen are dependent upon its geometry and the mechanical properties of the alumina ceramic. The basic dimensions of the test specimen are shown in Fig. B-1.

FIGURE B-1

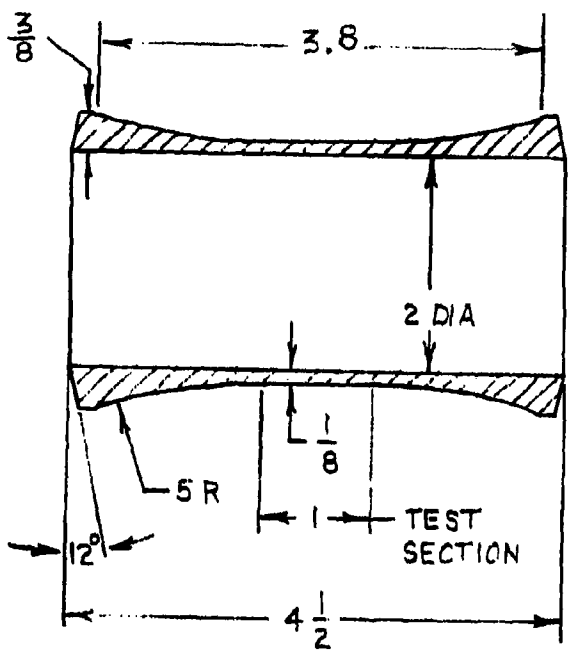

D/t ≅ 18

R/t ≅ 9

The mechanical properties of the alumina (WESGO Al-995) are reported by R. Sedlacek[10] to be as follows:

Young's Modulus (e) : 53.6×10^6 psi
Poisson's Ratio (ν) : 0.28
(compression)
Tensile Strength: $20\text{-}35 \times 10^3$
Uniaxial compressive strength: 448×10^3 psi

For a cylinder of the dimensions shown here little information is available in recent literature. Most of the studies are concerned with cylinders where the value of the diameter-thickness ratio D/t is large, i.e. for very thin wall pressure vessels. It is necessary to go back to the work of Southwell, von Mises, Flügge and Timoshenko which are fundamental to the more recent studies. Most of the early results can be found in the Handbook of Elastic Stability (Revised & Supplemented) by Yoshiki Masae, et. al., NASA, N69-34698, July 1969 (Reference B-1).

Most recent investigations are extensions of the work of von Mises (B-2) which is closely approximated by more intricate and later results of Flügge (B-3). Their expressions for critical (at the onset of buckling) uniform lateral pressure, with no axial stress, have been discussed by Timoshenko (B-4). The successful use of the expressions depends on a correct determination of the buckling mode, i.e. the number of lobes formed during buckling deformation. The von Mises results are considered to be invalid for ratios of ℓ/D less than 14, which includes the idealized model of our specimen where $\ell/D \cong 1.7$. Southwell (B-5) describes the external critical buckling pressure in terms of the number of circumferential lobes which are formed prior to failure and assumes a perfectly round end constraint of the tube. Southwell's equation (B-5) for the critical external buckling pressure P_c for a tube with uniform radial load and no axial load, constrained at the ends to remain perfectly circular, is

$$P_c = 2E\frac{t}{a}\left[\frac{q^4}{k^4(K^2-1)} + \frac{1}{3}\frac{m^2}{(m^2-1)}(k^2-1)\frac{t^2}{a^2}\right]$$

where P_c = external hydrostatic pressure

$2t$ = wall thickness

a = mean radius

$m = \frac{1}{\nu} = \frac{1}{0.28} = 3.57$

k = number of lobes or nodes in the buckling mode distortion

$q = \frac{\pi a}{\ell}$ where ℓ = length of tube

E = Young's modulus = 53.6×10^6 psi

The difficulty in applying this equation to the analysis of our tapered specimen, which has a gradually reducing wall thickness ending in a minimum wall thickness in the gauge section, lies in choosing a length (ℓ) for the idealized cylindrical model which represents, in the real specimen, the point at which the diameter is constrained to be perfectly circular by the increased wall thickness. To demonstrate the effect of the choice of (ℓ on the critical buckling pressure (P_c) we plot P_c vs. ℓ for the above equation, always choosing k to be the value which yields the lowest P_c (see Fig. B-2).

If we choose an idealized specimen length of 3.8 in., the critical buckling pressure is seen to be 68,600 psi. This length in the specimen represents the point at which the wall thickness is at the maximum of 0.375 in. At this wall thickness the moment of inertia (I) of the wall increases 27 times over the (I) in the test section and consequently this portion of the tube is 27 times more resistant to any lateral deformation causing it to go out of round. (See Fig. B-3). It is felt that this value of ℓ = 3.8 in. is a good approximation to perfect end constraint and demonstrates that our specimen did not buckle since the failure pressure was 61,800 psi.

When the 1:1 stress state tests are performed, the failure pressure may be as high as 75,000 p.s.i. It is felt that under this load condition the specimen is still safe from buckling. The critical buckling pressure for an idealized specimen length of ℓ = 3.0 in.is 80,000 p.s.i. The wall thickness producing the circular constraint at this length in the specimen is twice that in the gauge section (i.e. 0.250 in. as compared to 0.125 in. in the gauge section). The moment of inertia of the wall at this length of the specimen is 8 times that in the gauge section. Thus, the specimen at this

point will resist deformation causing it to go out of round 8 times as much as in the gauge section. Probably the force required to constrain the specimen to be round is rather small. The value of 8 times the resistance to out-of-round deformation at the specimen length of 3.0 ins. is felt to be a conservative estimate. Also, the idealized model does not include the additional resistance to such deformation arising from the fact that outside the gauge section the wall thickness is constantly increasing from 0.125 to the value of 0.250 in. at the length 3.0 in.

It is felt that the very accurate machining of these specimens and the excellent surface finish, permits us to apply this theoretical analysis to our specimens without a "knock-down" factor for geometrical imperfection.

FIGURE B-2

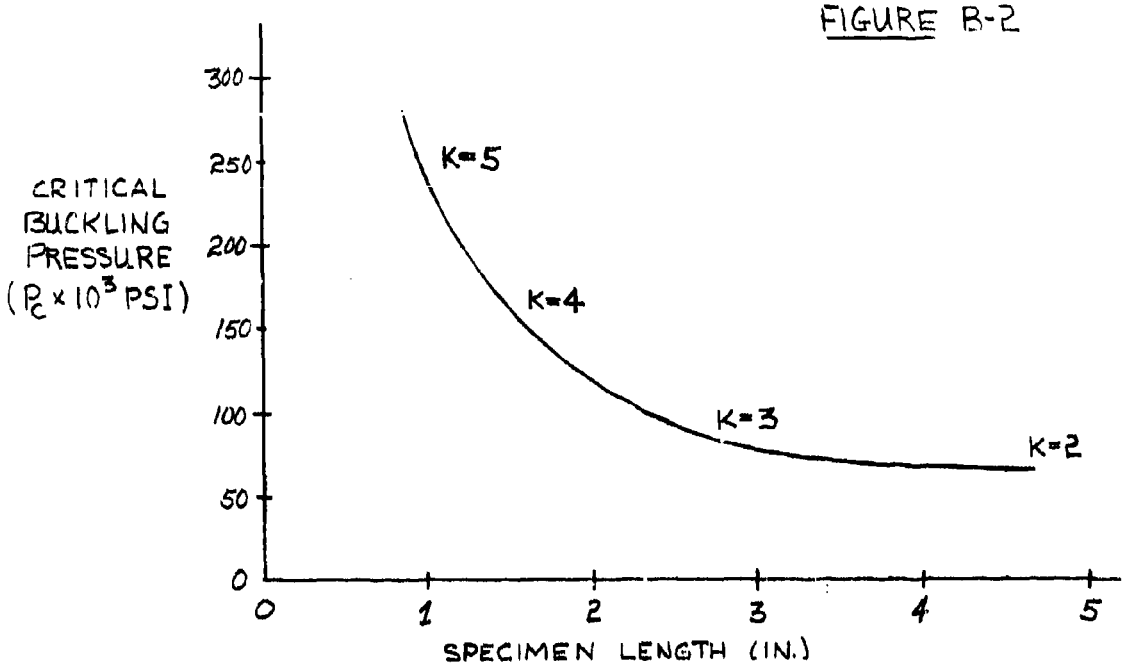

FIGURE B-3

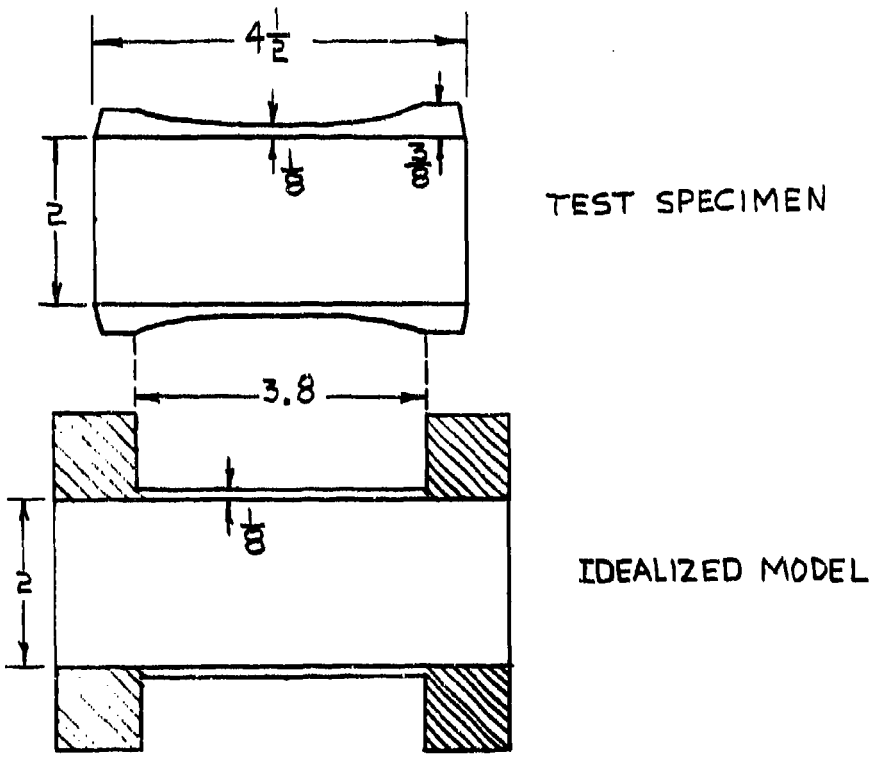

References

B-1. Yoshiki Masai, et al, "Handbook of Elastic Stability" NASA, N 69-34689, July 1969, Washington, D.C. [785 pages, available from Clearinghouse for Federal Scientific and Technical Information, U.S. Dept. of Commerce].

B-2 von Mises, R., "Der kritische Aussendruck zylindrischer Rohre". Zeits. Vereine deutscher Ing., Vol. 58, p. 750, 1914.

B-3. Flügge, W., "Stability of Circular Cylinders" Ing. Arcv., Vol. 3, No. 5, pp. 463-506, 1932.

B-4 Timoshenko, S., "Theory of Elastic Stability", McGraw-Hill, 1936.

B-5 R. V. Southwell, "On the General Theory of Elastic Stability", Philosophical Transcations, Vol. 213A, pp. 187-244.

APPENDIX C

ANALYSIS OF THE PRESTRESSING FIXTURE FOR THE 1:1 STRESS STATE

To obtain the desired axial stress on the specimen at the time of failure we must understand the compliance relationships in the prestressing fixture and the specimen. One end of the prestressing bolt is sealed off from the hydrostatic pressure by the prestressing case G of Figure 3. This greatly reduces the loss of bolt preload on the specimen as the fluid pressure is increased because it prevents the fluid pressure from acting on the two ends of the bolt thereby causing a compressive load which subtracts from its tensile prestress load. Even with this design, some amount of preload is lost due to the longitudinal elastic contraction of the specimen caused by the axial load on the specimen from the fluid pressure. This results in a decrease in the axial compressive preload on the specimen.

To quantitatively analyze this we assume an idealized model (See Fig. C-1) and recognize that the ceramic, sleeve and bolt compliances are in series.

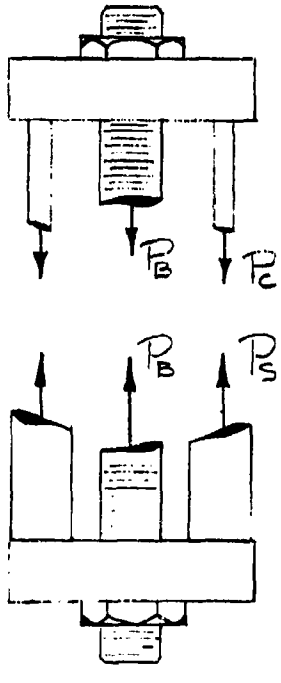

From free body diagrams we see that:

$P_B + P_c = 0$ and $P_B + P_s = 0$

where: P_B = preload in bolt

P_c = " " ceramic

P_s = " " sleeve

These are the relationships for the load in the ceramic due to the bolt preload.

FIGURE C-1

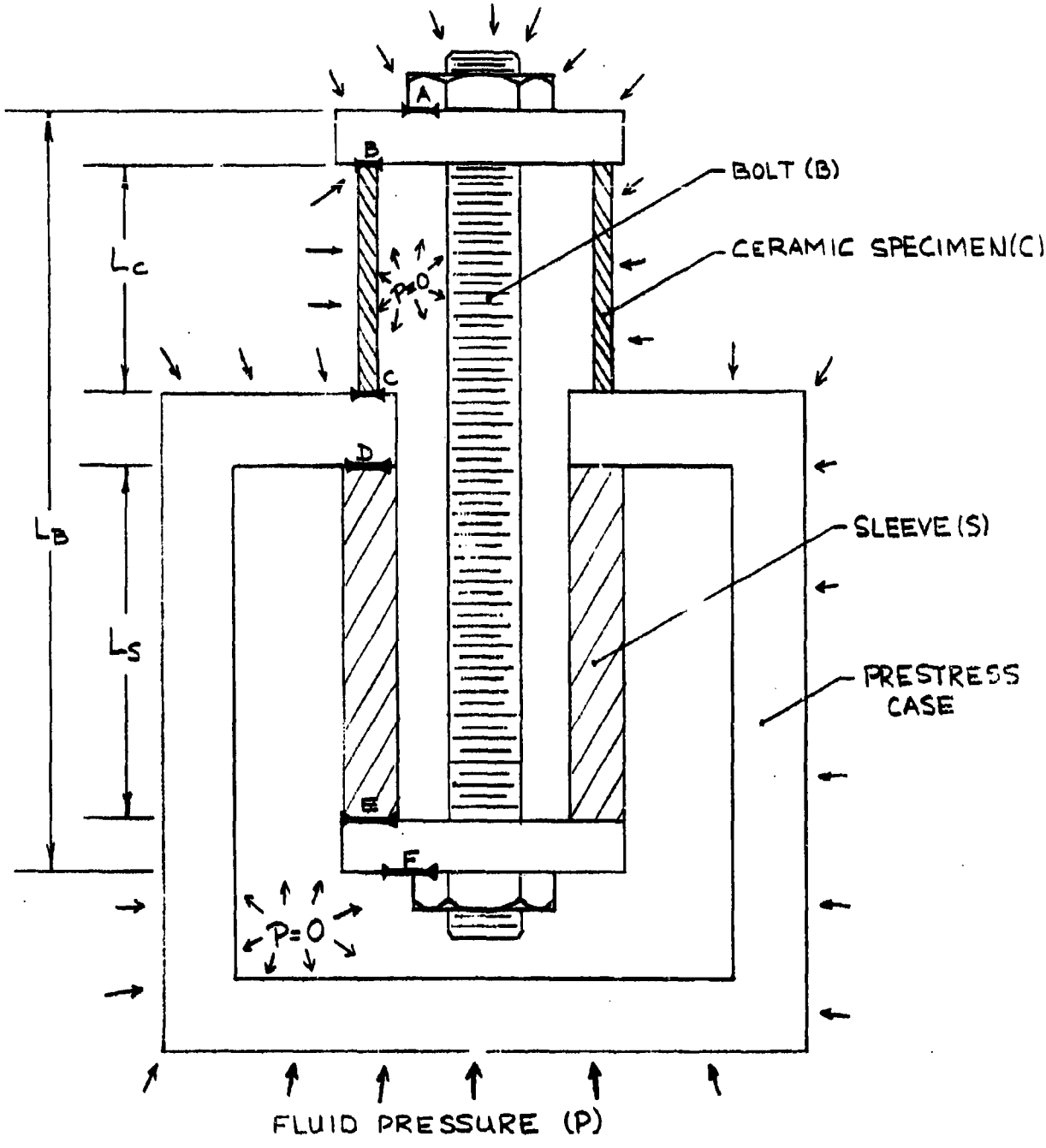
A
B
C
D
E
F
BOLT (B)
CERAMIC SPECIMEN(C)
SLEEVE (S)
PRESTRESS CASE
L_C
L_B
L_S
P=0
P=0
FLUID PRESSURE (P)

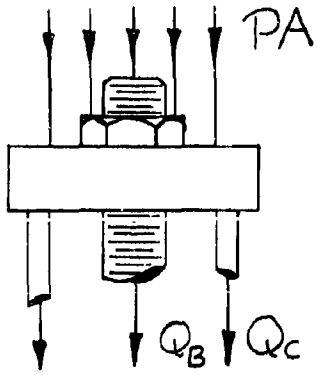

The relationships for the load in the ceramic due to the external pressure are

$$PA + Q_B + Q_C = 0 \quad \text{and}$$

$$Q_B + Q_S = 0$$

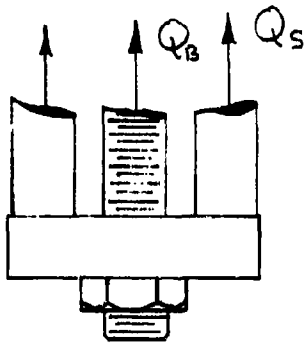

where Q_C = load in ceramic due to fluid pressure

Q_S = load in sleeve due to fluid pressure

Q_B = extra load in bolt due to fluid pressure

P = applied fluid pressure

A = end area of specimen over which fluid pressure is applied.

Q_S can be tensile as shown if the surfaces at E,F and D are welded. If the surfaces D, E, F are maintained in positive contact by any process such as bolt preload or thermal expansion the portion of the load in the spacer caused by the external pressure is equal to the extra bolt load Q_B.

The relations $PA + Q_B + Q_C = 0$ and $Q_S + Q_B = 0$ are not sufficient to determine Q_C, the load in the ceramic due to the external pressure (P). The additional condition used to determine Q_C is that $\delta_B = \delta_C + \delta_S$ which is derived from $L_B = L_{AB} + L_C + L_{CD} + L_S + L_{EF}$. Since L_{AB}, L_{CD} and L_{EF} are rigid, when external load is applied, the length changes are only

$$\Delta L_B = \Delta L_C + \Delta L_S \quad \text{or} \quad \delta_B = \delta_C + \delta_S$$

The deflection of a straight tension or compression member subjected to end load is:

$$\delta = PL/AE$$

or:

$$P = K\delta$$

where: (the stiffness) $K = AE/L$

then: $\delta_B = \delta_C + \delta_S$ becomes:

$$Q_B/K_B = Q_C/K_C + Q_S/K_S$$

but: $Q_S = -Q_B = PA + Q_C$

so: $-(PA + Q_C)/K_B = Q_C/K_C + (PA + Q_C)/K_S$

and: $Q_C = PA\left(\frac{1}{K_S} + \frac{1}{K_B}\right) \Big/ \left(-\frac{1}{K_B} - \frac{1}{K_C} - \frac{1}{K_S}\right)$

Changing the notation to compliances :

define : $C = 1/K$

so: $Q_C = -PA\left(\frac{C_S + C_B}{C_B + C_C + C_S}\right)$

where: $C_S = \frac{L_S}{A_S E_S}$

$C_B = \frac{L_B}{A_B E_B}$

$C_C = \frac{L_C}{A_C E_C}$

$E \equiv$ moduli of elasticity

$A \equiv$ area

$L \equiv$ length

We may now describe the total load in the ceramic specimen from the bolt preload and the external fluid pressure. We can see that:

$$P_{total} = P_{preload} + P_{external\ pressure}$$

$$P_{total} = -P_B - PA\left(\frac{C_S + C_B}{C_B + C_C + C_S}\right)$$

Since the hoop stress is twice the longitudinal stress for a cylindrical pressure vessel, the axial load on the ceramic cylinder must be (2PA) to develop a 1:1 stress field, so:

$$-2PA = -P_B - PA\left[\frac{(C_S + C_B)}{(C_B + C_C + C_S)}\right]$$

solving for P_B:

$$P_B = PA\left(\frac{C_B + 2C_C + C_S}{C_B + C_C + C_S}\right)$$

If P* is the pressure required to break the ceramic, the required bolt preload to achieve a 1:1 stress state at fracture of the ceramic specimen is:

$$P_B = P^*A\left(\frac{C_B + 2C_C + C_S}{C_B + C_C + C_S}\right)$$

Defining a non-dimensionalized bolt preload parameter for the 1:1 stress state as:

$$\bar{B} = \frac{P_B}{P^*A} = \left(\frac{C_B + 2C_C + C_S}{C_B + C_C + C_S}\right)$$

$$\bar{B} = 1 + \left[\frac{C_S + C_B}{C_C} + 1\right]^{-1}$$

A plot of $\bar{B}$ vs. $\frac{C_S + C_B}{C_C}$ shows how much additional preload must be applied

through the bolt due to the loss of preload during pressurization. (See Figure C-2)

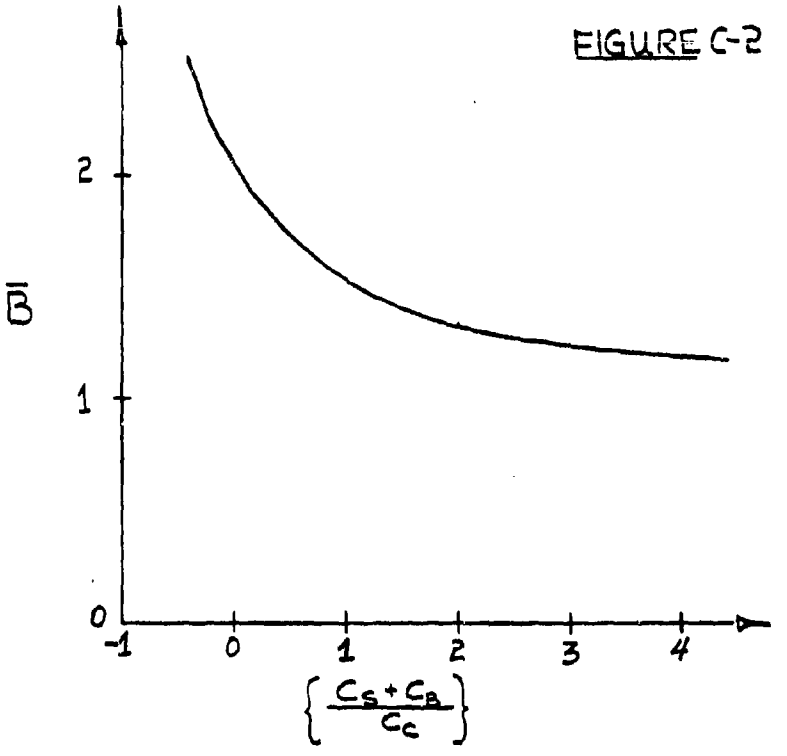

The compliance relationships for the prestressing fixture are calculated by determining the compliance of each part and recognizing that they are in series in the load train. The geometric model and dimensions assumed for calculation of the compliances are shown in (Fig. C-3). Figure C-4 shows a detailed drawing of the prestressing fixtures.

Bolt Compliance

$D_{B-1} = 1.80$ in. $R_{B-1} = 0.90$ in. $A_{B-1} = \pi R_{B-1}^2 = \pi (0.90)^2$

$L_{B-1} = 4.00$ in. $A_{B-1} = 2.54 \text{ in}^2$

$E_B = 27 \times 10^6$ psi

$$C_{B-1} = \frac{L_{B-1}}{A_{B-1} E_B} = \frac{4.00}{(2.54)(2.7 \times 10^7)}$$

FIGURE C-3

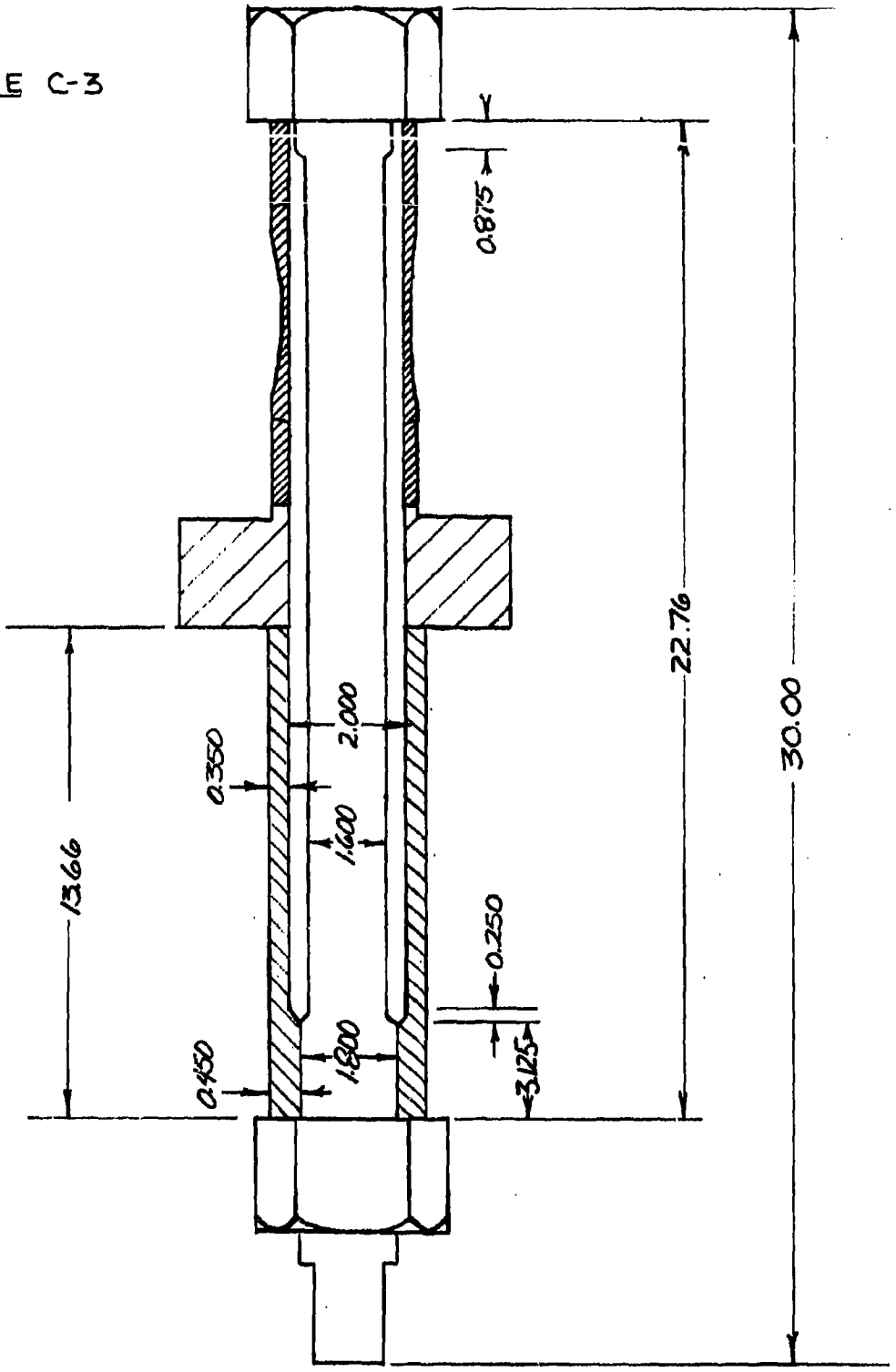

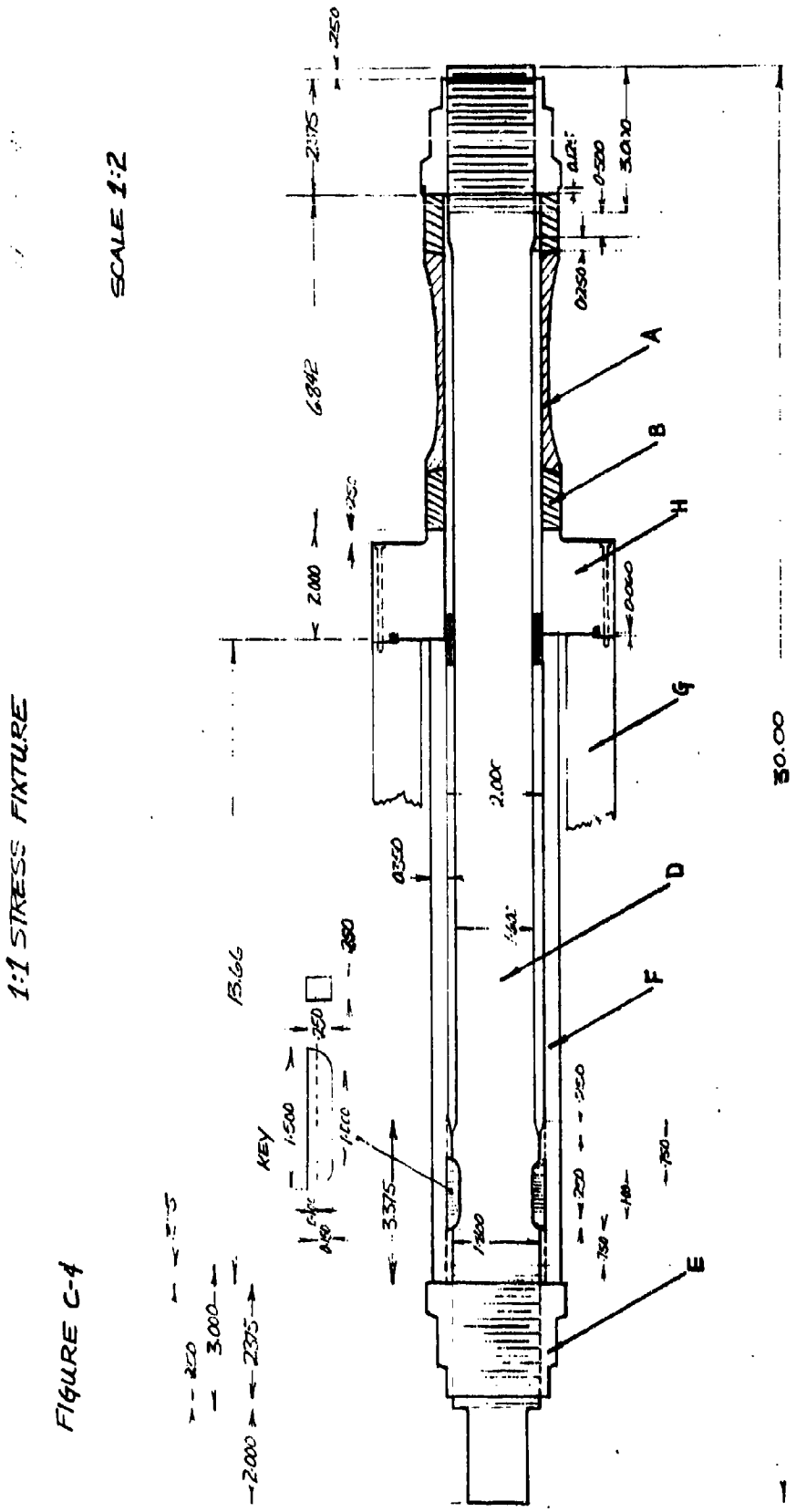
1:1 STRESS FIXTURE
SCALE 1:2
A
B
H
G
D
F
E
KEY
30.00
6.842
2.000
3.375
2.375
3.000
13.66

FIGURE C-4

$$C_{B-1} = 5.83 \times 10^{-8} \text{in lbs.}$$

$D_{B-2} = 1.60$ in. $\quad A_{B-2} = \pi R_{B-2}^2 = \pi (0.80)^2 = 2.01 \text{ in}^2$

$L_{B-2} = 18.76$ in $\quad C_{B-2} = \dfrac{L_{B-2}}{A_{B-2}E_B} = \dfrac{18.76}{(2.01)(2.7 \times 10^7)}$

$$C_{B-2} = 34.5 \times 10^{-8} \text{in-lbs.}$$

$$C_B = C_{B-1} + C_{B-2} = 5.83 \times 10^{-8} + 34.5 \times 10^{-8} = 40.3 \times 10^{-8} \text{ in-lbs.}$$

<u>Sleeve Compliance</u>

$D_{S-1}^{ave.} = 2.25$ in $\quad A_{S-1} = \pi (D_{S-1}^{ave})(T_{S-1})$

$T_{S-1} = 0.45$ in $\quad A_{X-1} = \pi (2.25)(.45) = 3.18 \text{ in}^2$

$L_{S-1} = 3.13$ in

$E_S = 27 \times 10^6$ psi $\quad C_{S-1} = \dfrac{L_{S-1}}{A_{S-1}E_S} = \dfrac{3.13}{(3.18)(2.7 \times 10^7)} = 3.64 \times 10^{-8}$ in-lbs.

$D_{S-2}^{ave} = 2.350$ in. $\quad A_{S-2} = \pi (D_{S-2}^{ave})(T_{S-2})$

$T_{S-2} = 0.350$ in. $\quad A_{S-2} = \pi (2.35)(.350) = 2.58 \text{ in}^2$

$L_{S-2} = 10.53$ in. $\quad C_{S-2} = \dfrac{L_{S-2}}{A_{S-2}E_S} = \dfrac{10.53}{(2.58)(2.7 \times 10^7)} = 15.1 \times 10^{-8}$ in-lbs.

$E_S = 27 \times 10^6$ psi

$$C_S = C_{S-1} + C_{S-2} = 3.64 \times 10^{-8} + 15.1 \times 10^{-8} = 18.7 \times 10^{-8} \text{in lbs.}$$

The compliance of the bolt is 40.3×10^{-8} in-lbs. and the compliance of the sleeve is 18.7×10^{-8} in-lbs. By using a large scale drawing and measuring thicknesses from it the compliance of the specimen and end caps is found to be 7.7 and 10^{-8} in-lbs.

The anlysis of the tension preload in the bolt required to produce a 1:1 stress field in the ceramic at the failure pressure (P*) gave the following equation to describe the bolt preload:

$$\bar{B} = \frac{P_B}{P^*A} = 1 + \frac{1}{\left\{\left(\frac{C_S+C_B}{C_C}\right) + 1\right\}}$$

where $\bar{B}$ = non-dimensionalized bolt preload parameter

P^* = expected failure pressure

A = area over which the pressurizing fluid acts to load the specimen

C_B = compliance of bolt

C_S = " " sleeve

C_C = " " specimen

so

$$\bar{B} = 1 + \frac{1}{\left\{\frac{(18.7 + 40.3)}{7.7} + 1\right\}}$$

$$\bar{B} = 1.115$$

The required preload in the bolt is seen to be 11.5% greater than that if there were no unloading of the preload force on application of the external pressure. Since the axial stress in an externally pressurized cylinder is $\frac{1}{2}$ the hoop stress, an axial preload of 61.5% (50% + 11.5%) of the expected failure load is applied to the specimen through the bolt before pressurization. As pressurization proceeds the preload is reduced gradually until at P*, 11.5% of the preload is lost and the specimen fails in a 1:1 stress state.