AD732682

COMPUTER MEMORY MANAGEMENT AT RAND

A. C. Shetler
S. Glaseman

May 1971

D D C
NOV 23 1971

Reproduced by
NATIONAL TECHNICAL
INFORMATION SERVICE
Springfield Va. 22151

P-4585

Best Available Copy

CONTENTS

Section

I. INTRODUCTION 1

II. INSTALLATION ENVIRONMENT 4
Hardware 4
Software 4
Workload Characteristics 4
Objectives 6

III. FIXED INITIATOR CONTROL OF MEMORY 7
Batch Processing 7
On-Line Processing 7
RJE Processing 11

IV. IMPLEMENTATION OF THE FIXED INITIATOR 16
Externals 16
Internals 16

V. CONCLUSION 23

APPENDIX 24

BLANK PAGE

COMPUTER MEMORY MANAGEMENT AT RAND*

A. C. Shetler
S. Glaseman

The Rand Corporation, Santa Monica, California

I. INTRODUCTION

When the Rand Computation Center (RCC) first put the 360/65 into production status (December 1968), the memory management considerations were confined to approximately 350K[1] of Processor Storage in which our job stream was multiprogrammed.[2] The problems of core fragmentation and appropriate scheduling algorithms for the efficient utilization of the computer resources were minimal since the environment was dynamic in the sense that any particular unfavorable situation lasted a relatively short period of time. The users in this batch processing environment were usually unaware of memory management problems as long as turnaround was not affected.

Approximately 18 months ago (September 1969) RCC added one million bytes of IBM LCS[3] for use in supporting an on-line system for our users. When the LCS was added, there were immediate memory management problems needing resolution.

---

*Any views expressed in this paper are those of the authors. They should not be interpreted as reflecting the views of The Rand Corporation or the official opinion or policy of any of its government or private research sponsors. Papers are reproduced by The Rand Corporation as a courtesy to members of its staff.

Part of this paper was presented at SHARE XXXVI, March 8-12, 1971, Los Angeles.

[1]One K is equivalent to 1024 bytes, or 256 words of system 360 storage; one byte has 4 bits; one word is composed of 4 bytes.

[2]Multiprogramming is a software mechanism whereby several jobs can execute concurrently in a computer.

[3]LCS is slower-access memory that can be added to a computer. The difference between the Processor Storage access speed and the LCS access speed is approximately 8 to 1; hence a job would use approximately eight times the number of CPU cycles to execute in LCS as would be required by the same job in Processor Storage.

The batch jobs had to be prevented from executing in LCS. Accidental execution in this slower-speed memory would have created severe accounting problems. It was also necessary to reserve storage for the interactive system when it was not resident. In the case of an ABEND operations would have to quiesce the operating system to restart the interactive system in the desired memory location. This action was certain to affect turnaround for the batch user and delay restart for the on-line user. Though not a primary consideration, the ability to reserve regions with specific memory locations for on-line applications was also found to be desirable. RCC anticipated having several users with interactive programs resident in the machine for several hours; with standard MVT memory management core fragmentation could have become a problem. By restricting these users to predefined regions, core fragmentation could be eliminated for these applications.

Hierarchy Support[1] was rejected as an alternative for managing memory because it did not solve the problem. After the special SYSGEN required, the special link-edits required for tasks using the Hierarchy Storage, and the resident memory required for Hierarchy Support, the problems previously defined still existed. The batch user, by using a JCL manual, could still execute a LCS, though now it would be purposeful. The LCS would still have to be quiesced to guarantee the interactive system storage placement. The core fragmentation from long-running interactive user tasks would still be a part of the Hierarchy Supported environment.

The May 27, 1969 issue of the *IBM Installation Newsletter* described a non-supported, release dependent, modification to the Initiator[2] which allowed memory locations to be assigned to a particular initiator. This was a relatively easy modification to implement, costing less than 100 bytes of non-resident storage, and appeared to solve our problems. This

---

[1]Hierarchy Support is a SYSGEN option for OS/MVT. It provides for overt selection of the desired memory speed for program execution in slower-speed memory, and default selection of Processor Storage for normal job execution.

[2]The Initiator is an OS system task which handles the housekeeping activities associated with getting a job started and terminated in the system. An Initiator handles jobs sequentially in the system.

modification to the Initiator provided a mechanism whereby when the initiator is started it retains a region of a fixed size, executing the tasks it attaches in this fixed region.

Section II will describe the current environment of the Rand Computation Center. Section III will detail what kind of memory management is accomplished through fixed initiators. Section IV will describe the externals and internals of Fixed Initiator implementation and Sec. V will summarize the effect of this mechanism for memory management.

II. INSTALLATION ENVIRONMENT

A brief description of the RCC environment should aid in describing the production mode of operation using Fixed Initiators to Fence Core.

HARDWARE

Figure II-1 is a diagram of the hardware configuration as of March 1, 1971. There are multiple manufacturer's equipment attached to the IBM 360/65. A Calcomp 2314 disk device, Potter 7-track tape drives, and 1024K of AMPEX ECM[1] have successfully been running in RCC, at a significant cost savings.

SOFTWARE

The production software for the IBM 360/65 is OS/MVT, multiprogramming with a variable number of tasks. There are several local modifications to this system. Several user SVC's have been included for support of the Video Operating System (VOS), Conventional Programming System (CPS), and user systems. The initiator has been modified to allow fixed and floating initiators. Force Task Switching has been implemented to resolve lock-out problems for our on-line users (also applies to the batch environment). Prior to Release 19.3 of MVT there were Rand modifications to collect EXCP counts and high water mark for memory utilization. Release 19.3 saw the end of the accounting patches and the introduction of SMF[2] with extensive use of the user exits.

WORKLOAD CHARACTERISTICS

RCC, during March, is converting from Release 17 to Release 19.3 of MVT on a 360/65 with the usual accompaniment of peripheral devices.

---

[1] AMPEX ECM is a faster slow-speed storage with an access speed of 2.8 to 1 compared to Processor Storage; that is, a task would take approximately 2.8 times the CPU to execute in ECM as compared to an execution in Processor Storage.

[2] System Management Facilities is an OS SYSGEN option to collect and record resource usage by job.

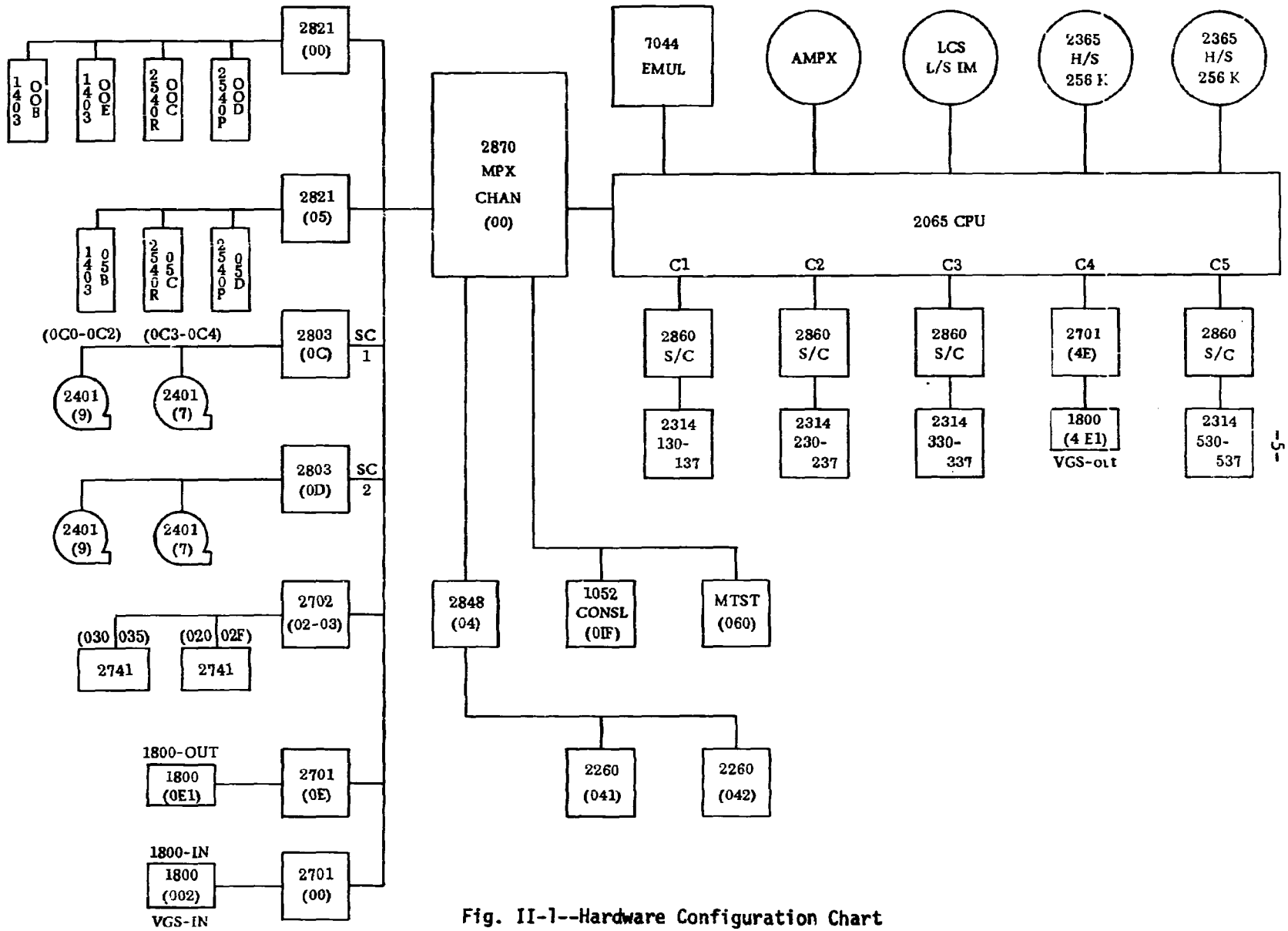

Fig. II-1--Hardware Configuration Chart

Over two hundred batch jobs are processed every day; these are logged in over the counter and returned via the PAL box. Over one hundred RJE jobs are processed every day; these are entered through the two on-line systems. Two on-line systems, having RJE facilities, are available for users between 9:00 a.m. and midnight daily. An IBM/7044 is emulated approximately 30 minutes a night. When measured, the CPU activity is above the 70 percent level.

OBJECTIVES

The Rand Computation Center has specific objectives directing services for our users. First, computing must be provided for corporate and research data processing. Second, hardware and software support must be provided for users developing new systems. And third, interactive services should be provided for the users, and when necessary services do not exist, these services are to be developed. These objectives result in one major constraint on our system. The hardware and software must be maintained in a state that permits easy implementation of new user systems; any system modifications imposing inflexibilities usually cannot be implemented. This restricts the improvements we can make on the system by the effect on the flexibility necessary for the users. And not unlike most computer installations, these objectives and constraints are subject to the overriding requirement for stability and reliability in the system.

III. FIXED INITIATOR CONTROL OF MEMORY

Having discussed the background for and the environment of our Fenced System, let us examine how it is used. Figure III-1 is a memory allocation diagram. There are two and a half million bytes of storage to support our Batch and On-Line/RJE processing. We have 512K of Processor Storage, 1024K of IBM LCS, and 1024K of AMPEX ECM.

BATCH PROCESSING

Figure III-2 describes the Batch Processing environment. In this 512K of Processor Storage, 350K is available for the Batch jobs. This is Rand's MVT environment with 3 or 4 active initiators. The Reader and Writer tasks are not resident in this storage; they reside in the slower-speed memory. Core Fencing controls the batch processing by preventing batch jobs from running in slower-speed storage

ON-LINE PROCESSING

Figure III-3 describes the On-line Processing environment. There are three user tasks and one system task that make up the on-line systems.

The first of these user tasks is a Rand-developed system, VOS. The Video Operating System is a message switching task which performs communication between active OS tasks and the user at a Video Terminal via a 2701 data line between the IBM 1800 and 360/65. Through VOS a user at a Video Terminal can communicate with any or all on-line systems active in OS. And since VOS can provide message paths between the Video Terminal and any tasks in the system, a single user can be connected with several tasks at one time. There are 24 Video Terminals available for the users.

The next user task is Simultaneous Graphics System (SGS), also a Rand-developed system. It is a text editor with RJE facilities. Up to 10 users can be supported in a 60K region. Communications between SGS and the users is through the VOS system.

The third user task is CPS, the class A supported Conversational Programming System with Rand modifications. The PL/1 subset, CPS, is

MEMORY ALLOCATION

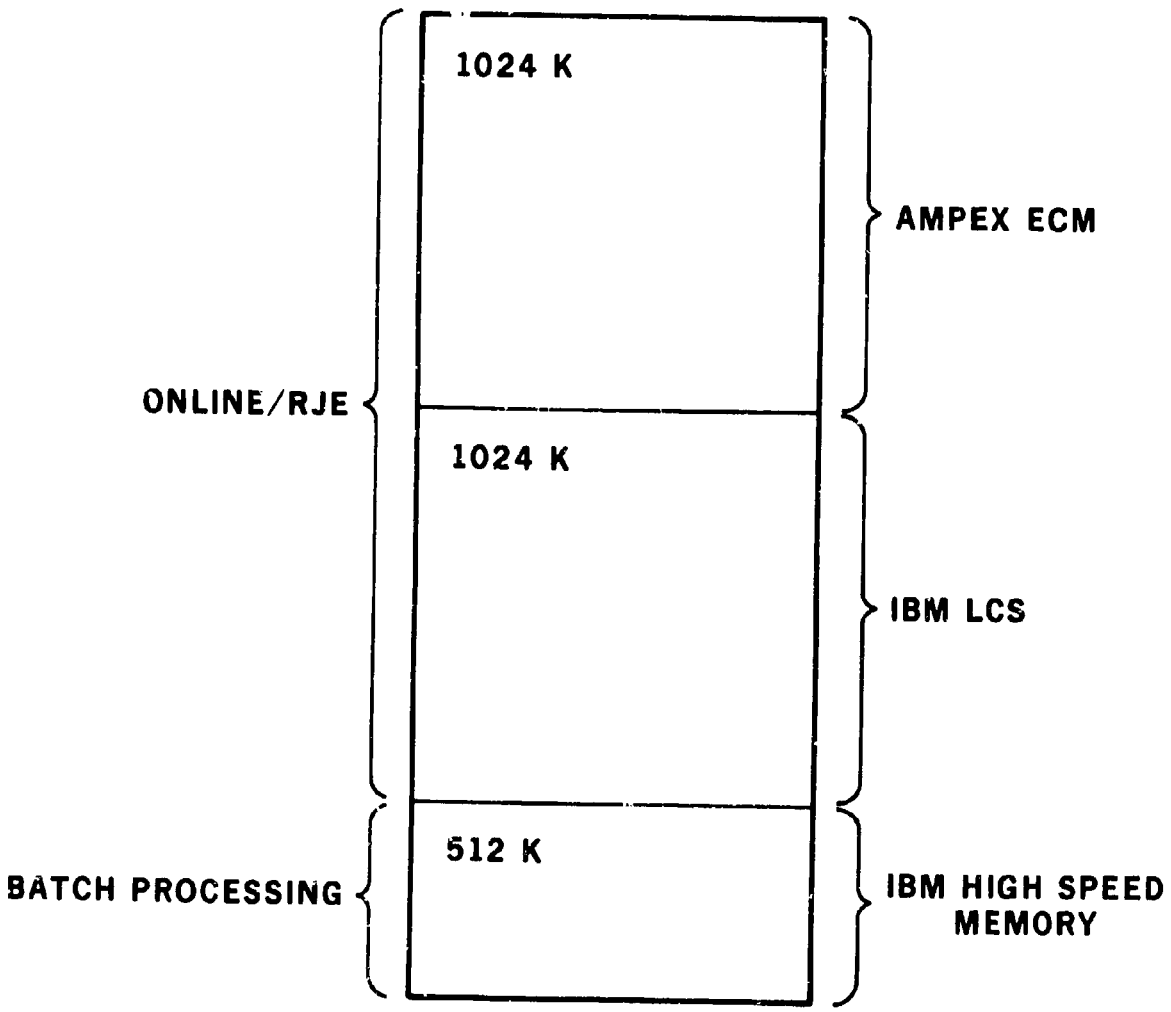

Fig. III-1--Memory Allocation

BATCH PROCESSING

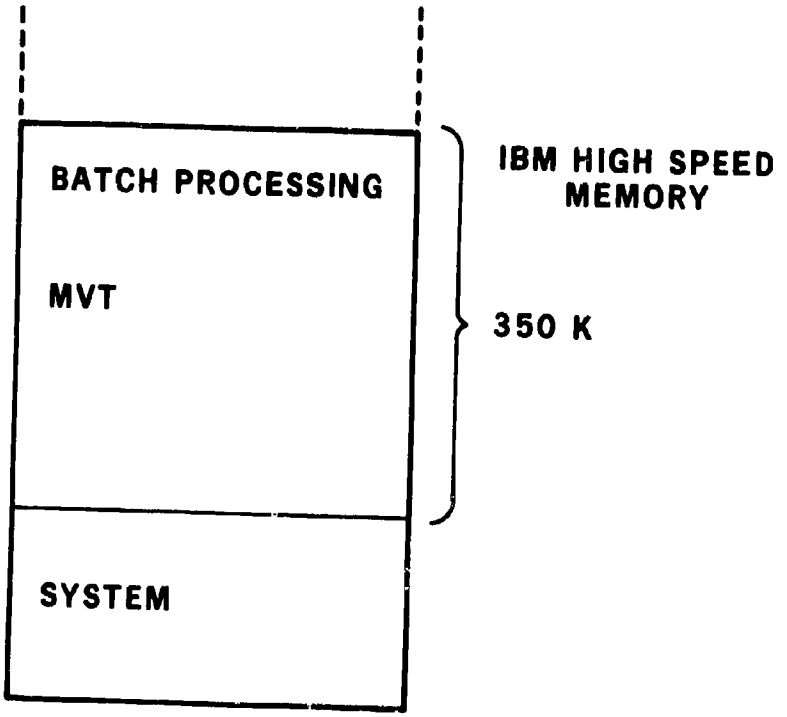

Fig. III-2--Batch Processing

ONLINE SYSTEMS

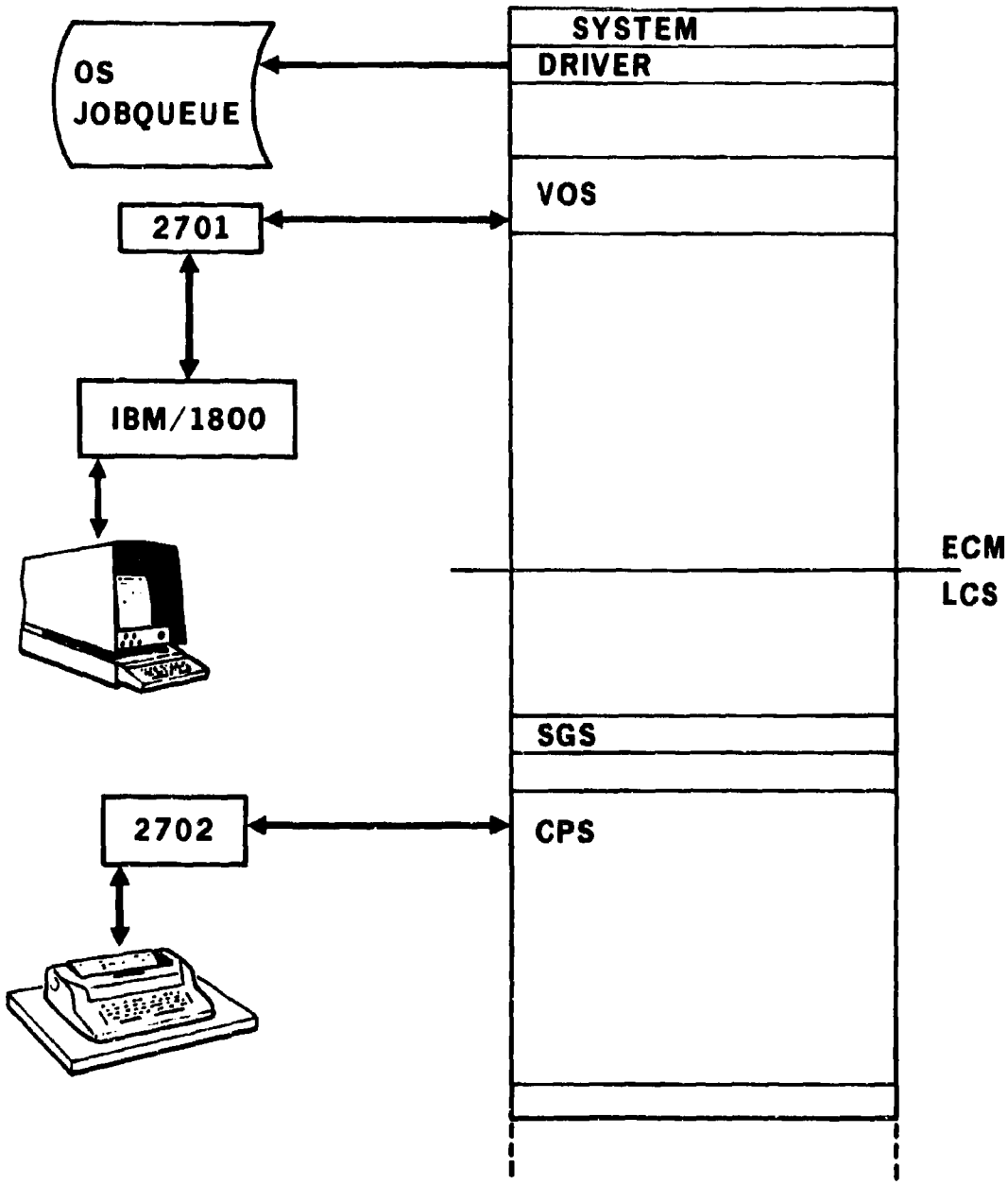

Fig. III-3--On-Line Systems

provided, as is the text editing with RJE facilities. Communication with CPS is through the 2701 to the 2741 typewriter terminals, or through the VOS to the Video Terminals. The Video Communication with CPS is one of the Rand modifications to CPS.

At the top of Fig. III-3 is a System task called DRIVER. DRIVER is a resident reader facility which sequentially processes RJE jobs passed from either SGS or CPS, and enters these jobs into the standard OS job queue. CPS or SGS can pass RJE jobs to DRIVER. Since DRIVER is a system task it must be active to reserve memory. The three user tasks, VOS, SGS, and CPS have Fixed Initiators which reserve the Storage for them when they are not resident.

RJE PROCESSING

In Fig. III-4, which describes RJE Processing, VOS is included because the video facilities are also available to the RJE processing regions. There are three 228K regions, three 104K regions, and one 64K region. The jobs executed in these regions are entered into the system via RJE through DRIVER. These jobs or tasks can include any processing that is normally done in the batch mode, with limitations on tape and disk mounts. That is, normal batch processing can be executed in these regions if the user is willing to pay for the slower-access memory. The purpose of these regions is to permit user-developed on-line systems nonfragmented storage for debugging and production processing. These regions are also used in another way. They can be reserved for projects which require rapid access to the system. An example of this is our Pseudo-50.

A bit of an explanation is necessary for the Pseudo-50. A 360/50 with 256K of Processor Storage, a 5-drive 2314, a printer, a card reader/punch, and a sign-in sheet sat in one corner of the Computer Room, where the users ran in a hands-on mode. These users also had access to the Video system; they IPLed the 360/50 and ran their jobs hands-on.

In order to save money the reader/punch and the printer were connected to the 360/65 and an OS Reader and Writer were provided for these devices, as indicated in Fig. III-5. A Fixed Initiator provided a

RJE PROCESSING

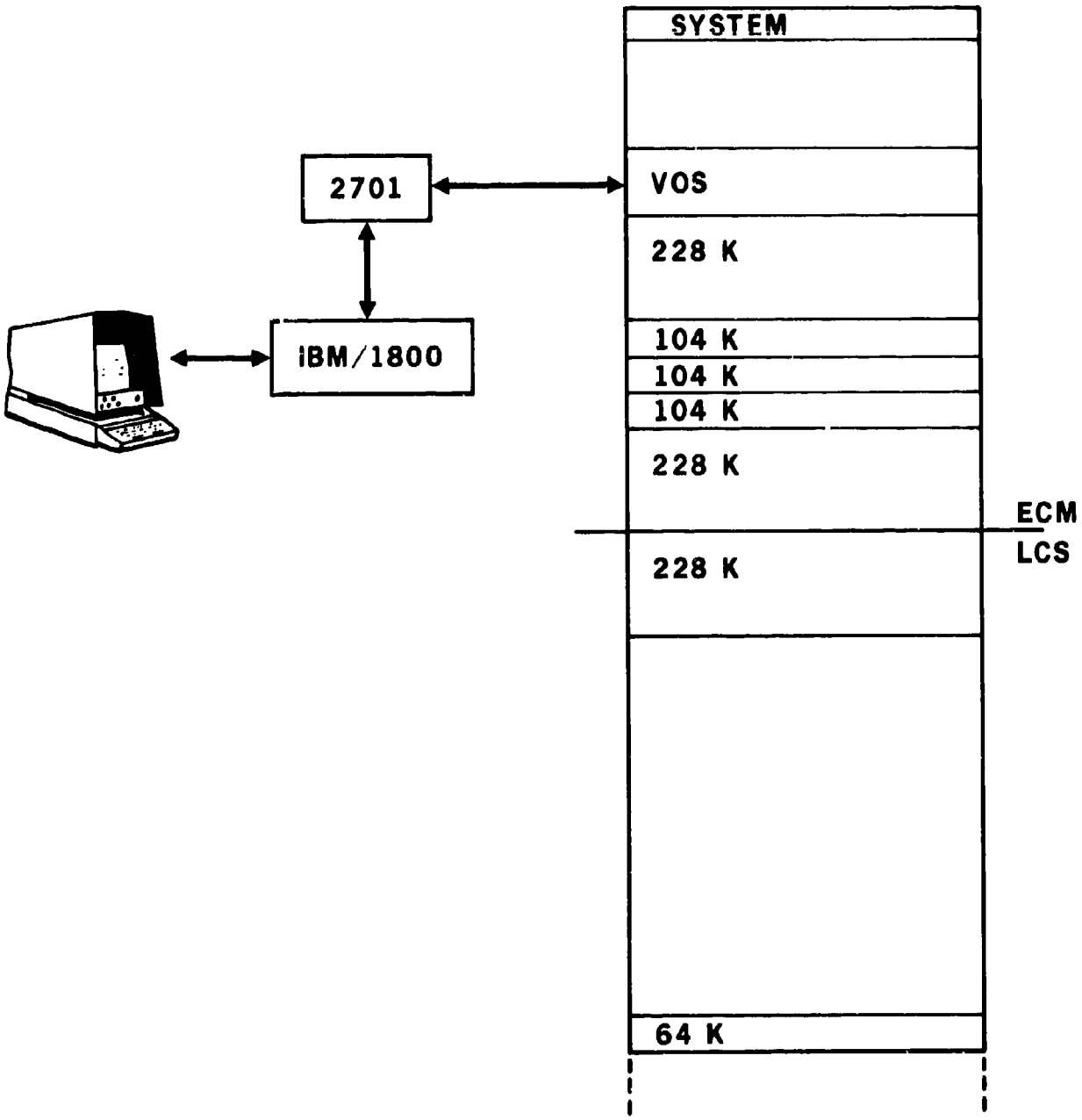

Fig. III-4--RJE Processing

PSEUDO-50

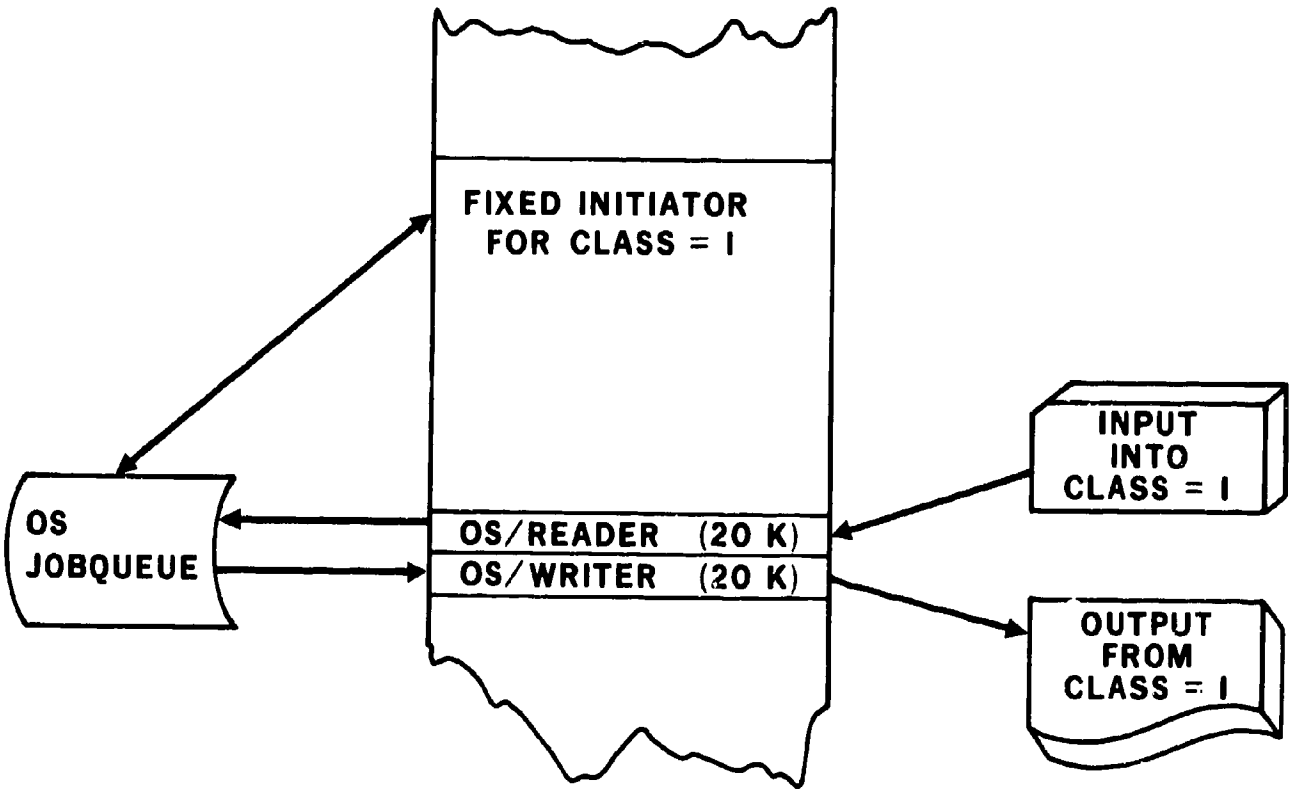

Fig. III-5--Pseudo-50

300K Fenced Region for our Pseudo-50. The sign-in log was maintained and three 2314 drives on the 360/65 were made available to these users. The 360/50 CPU, 256K Processor Storage, and the 5-drive 2314 were returned. The Pseudo-50 user could still enter his cards through the reader, sending the job into the standard OS job queue on the 360/65. The job would be picked up by the Fixed Initiator assigned to the appropriate job class, and when the job completed, the printer output was directed to the printer or card punch at the user location; hence the Pseudo-50. This is an example of how approximately $20,000 per month of equipment rental was saved, and the user had effectively the same environment as the hands-on machine. Without Core Fencing through Fixed Initiators the idea of a Pseudo-50 could not have been accomplished.

Figure III-6 describes the On-line/RJE Processing System with its Fixed Region/Fenced Core. There is purposeful fragmentation; some storage is not fenced (i.e., between DRIVER and VOS). These unfenced regions are reserved for Operation Aids and the Batch Reader and Writers. Batch User jobs are not able to be initiated in these fragments because they are smaller in size than the minimum region request for a user task.

ONLINE/RJE SYSTEM

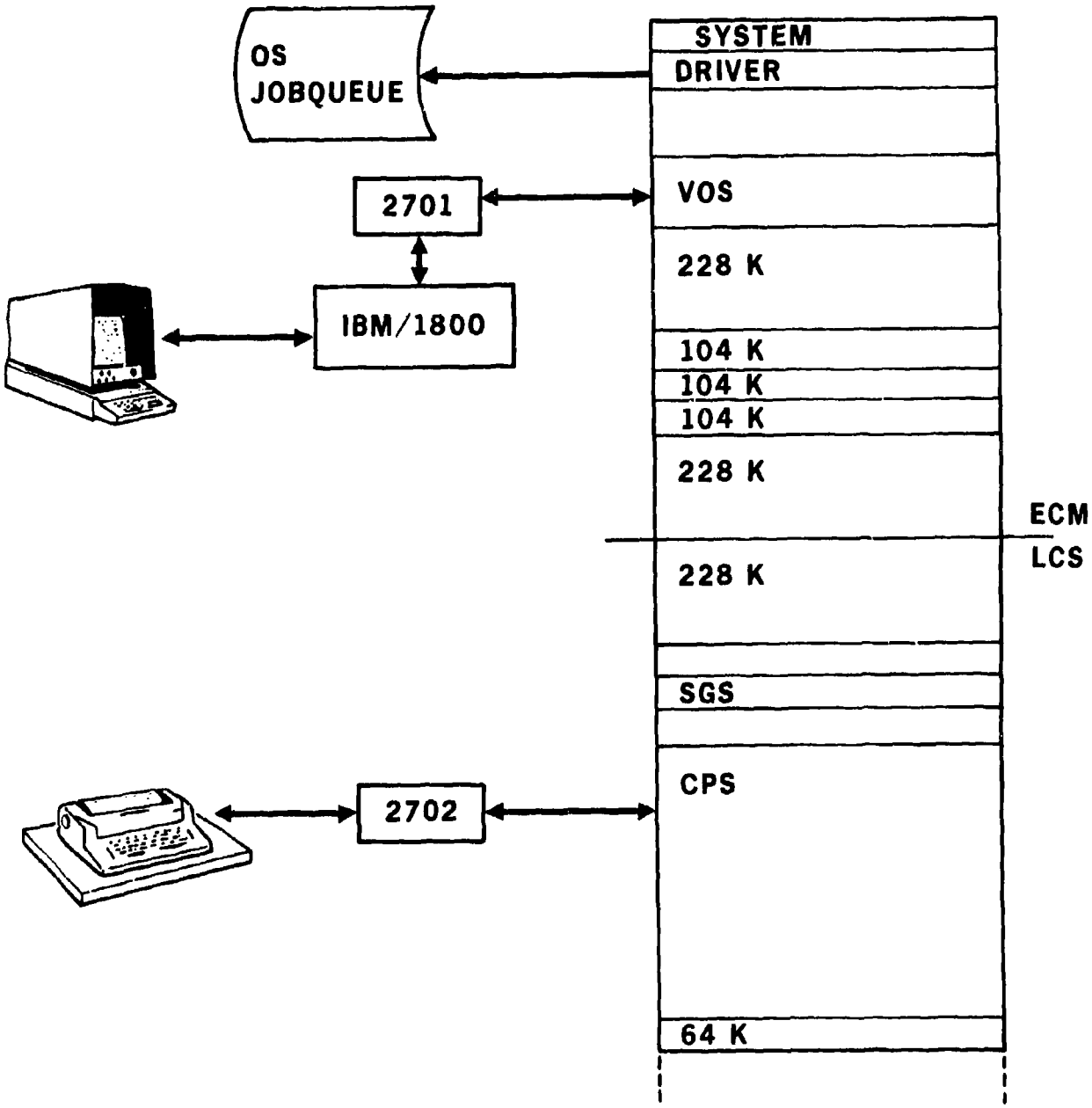

Fig. III-6--On-Line/RJE System

IV. IMPLEMENTATION OF THE FIXED INITIATOR

The facility for managing on-line storage in a multiprogramming environment had the requirement of easy implementation. This is expanded below in the Externals; the OS modifications necessary for implementation are expanded in the Internals.

EXTERNALS

The implementation of the Fixed Initiator modification is relatively straightforward. The Procedure names for the Initiator to be Fixed must start with a common alpha; we chose F for fixed. The region parameter on the execute statement for these initiators specify the fixed region required by the initiator. The set-up for the normal memory configuration takes about 20 minutes for a Warm Start. Fig. IV-1 illustrates the sequence of commands currently required to configure the system. These commands are executed via a reader procedure which points to the command data set as its input stream.

INTERNALS

The modifications for Fixed Initiators have changed since Release 17. The Initiator modules have been rewritten and Fixed Initiators now require modifications to four modules in LINKLIB. This represents less than 400 bytes of nonresident code in these four modules.

In what follows, attention is called to IBM's practice of identical naming of load modules and control sections (CSECTs). Beware of confusing the two. Microfiche names appear on the accompanying charts, as do load module names. Note that CSECT names are *not* represented on Figs. IV-2 or IV-3 (pp. 21-22).

I. Standard Initiation - MVT

The initiation task in an MVT environment has several steady-state conditions. Currently, at Rand, the conditions possible are:

a. Waiting for work—in this case the initiation procedure is represented by one load module in the link pack area. None of available core storage is assigned to the initiation task.

FIGURE IV-1

STANDARD WARMSTART

COREMAP IMAGE	
MASTER SCHEDULER	80A
IPL (DRIVER)	22A
COREMAP	16A
LOVE	16A
FVOS	122A
FNIH	228A
FHG104	104A
F2HG104	104A
FGH104	104A
FJ228	228A
Ampex LCS/Boundary	
WTRE	20L
FF228	228L
WTRB	20L
FSGS	52L
WTRD	20L
FCPS	596L
TWRITER	24L
FM64	64L
LCS Boundary	
FREE CORE	342H
SQS & NUCLEUS	170H
NORMAL	WAITING
SLOPPY	WAITING
SLOW	WAITING
SPEEDY	WAITING

"IPL" READER COMMANDS*		
H	Q	10
D	JOBNAMES,T	20
S	COREMAP	30
S	LOVE	40
S	FVOS	50
S	FNIH	60
S	FHG104	70
S	F2HG104	80
S	FGH104	90
S	FJ228	110
S	WTRE	120
S	FF228	130
S	WTRB	140
S	FSGS	150
S	WTRD	160
S	FCPS	170
S	TWRITER	185
S	FM64	190
S	ONLINE	200
S	NORMAL	230
S	SLOPPY	240
S	SLOW	250
S	SPEEDY	260
D	A	270

*This sequence of commands is activated by the operator issued command:

S IPL

b. Job/step initiation processing--in this case the initiator is represented by several load modules. Some of these reside in, and are executed from, the link pack area. The others must be furnished with a region of available core storage. This allocation of core is carried out dynamically, under standard region management conventions. That is, the region is freed when the initiator modules relinquish control (e.g., to the task being initiated).

c. Limbo--a name for the situation in which a user job step has been attached by the initiator. In this case the initiator is represented by a load module in the link pack area which will receive control when the job step terminates. The initiator proper has no dynamic storage assigned it at this time; but, the attached job step is running in a region obtained for it by the initiator prior to the attach.

d. Job/step termination processing--this condition is similar to (b), above. When termination processing is complete the dynamically allocated core assigned to initiator load modules is released and the situation reverts to condition (a) or (b), above.

II. Fixed Initiation - MVT

An IBM Installation Newsletter, issued while Rand was on Release 17 of MVT, outlined what seemed a relatively easy way to obtain for MVT some of the benefits of the fixed partition system of MFT. Specifically, the modification involved changes to the steady-state conditions described above. Instead of releasing the region assigned to the initiator load modules when the initiator is waiting for work, or has attached a user job step, the region is kept fixed in core. Setting the region size requested in the initiator procedures to appropriate values enables the system to more efficiently manage our complex mixture of permanently resident on-line systems and transient batch job processing.

III. Implementation of Fixed Initiation

a. For Release 17 of MVT--Implementation involved changes to only two control sections within one load module, IEFSD061. The single further requirement is that the procedure names for the fixed initiators begin with the letter F (e.g., FGH104, FF228). Changes to control sections are described as follows:

1. CSECT IEFSD061: Code was inserted to test for a fixed initiator. If yes, and the initiator must wait for work, the wait is performed in-line *instead of* transferring control to load module IEFSD105 which normally frees the initiator's region, and then issues the wait from the link pack area.

2. CSECT IEFSD062: Code was inserted to test for a fixed initiator. If yes, and the job step being processed requires enqueuing on data sets, enqueuing is performed in-line. If yes, and no enqueuing is required, the in-line enqueue is bypassed. In either case, control then passes directly to the allocation interface module IEFSD062 *instead of* transferring control to module IEFSD102 which normally performs a region swap, in addition to checking for the need to enqueue on data sets.

With the exception of the above changes for initiators whose names begin with F, job step initiation proceeds in the standard manner. Figure III-2 (for Release 17) summarizes where the changes are located with respect to the entire procedure.

b. For Release 19 of MVT--implementation was complicated by several rather basic changes to the job/step initiating procedure. In Release 19 some parts of the system task control routine were merged into the initiator. A more detailed explanation of these changes may be found in the MVT JOB MANAGEMENT PLM (GY28-6660). These modifications required a reworking of the system changes which would allow fixed initiation. The following text identifies, by CSECT within load module, the changes necessary to allow fixed initiation with Release 19.

1. Load Module IEFSD061

   - CSECT IEFSD062--this module retained the changes necessary under Release 17. Code was added to implement a "first time through" flag. This procedure allows a starting fixed initiator to obtain its core through a standard region swap in module IEFSD102. After this "first time through" the flag allows a fixed initiator no further access to module IEFSD102.

   - CSECT IEFSD061--this module retained the changes necessary under Release 17. Code was added to remotely reset the flag in CSECT IEFSD062 whenever load module IEFSD061 was loaded via an XCTL from modules IEFSD060 or IEFSD062.

   - CSECT IEFSD104--code was added to remotely reset the flag in CSECT IEFSD062 whenever load module IEFSD061 was loaded via an XCTL from module IEFSD263.

   - CSECT IEFW42SD--code was added to remotely reset the flag in CSECT IEFSD062 whenever load module IEFSD061 was loaded via an XCTL to entry points IEFW42SD or IEEV4221 within the block labeled "TERMINATION" (see Fig. IV-3).

- o CSECT IEFSD065—code was added to remotely reset the flag in CSECT IEFSD062 whenever load module IEFSD061 was loaded via an XCTL from module IEFSD062.

2. Load Module IEFSD062

   - o CSECT IEFSD062—code was added to test for a fixed initiator. (As before, the fixed initiator's jobname must begin with F.) If yes, a branch is enabled which causes the region of core containing the Getpart Work Table (GWT) to be released. The absence of GWT is used in subsequent code as an indication that a region swap at attach-time is not desired.

3. Load Module IEFSD263

   - o CSECT IEFSD263—code was added to test for a fixed initiator. If yes, code is bypassed which normally swaps regions just prior to job step attachment. Another fixed initiator test later in this CSECT prevents a region swap upon return to this CSECT when the attached job step gives up control.

Figure IV-3 (for Release 19) summarizes the above modifications, and locates them within the initiator control flow.

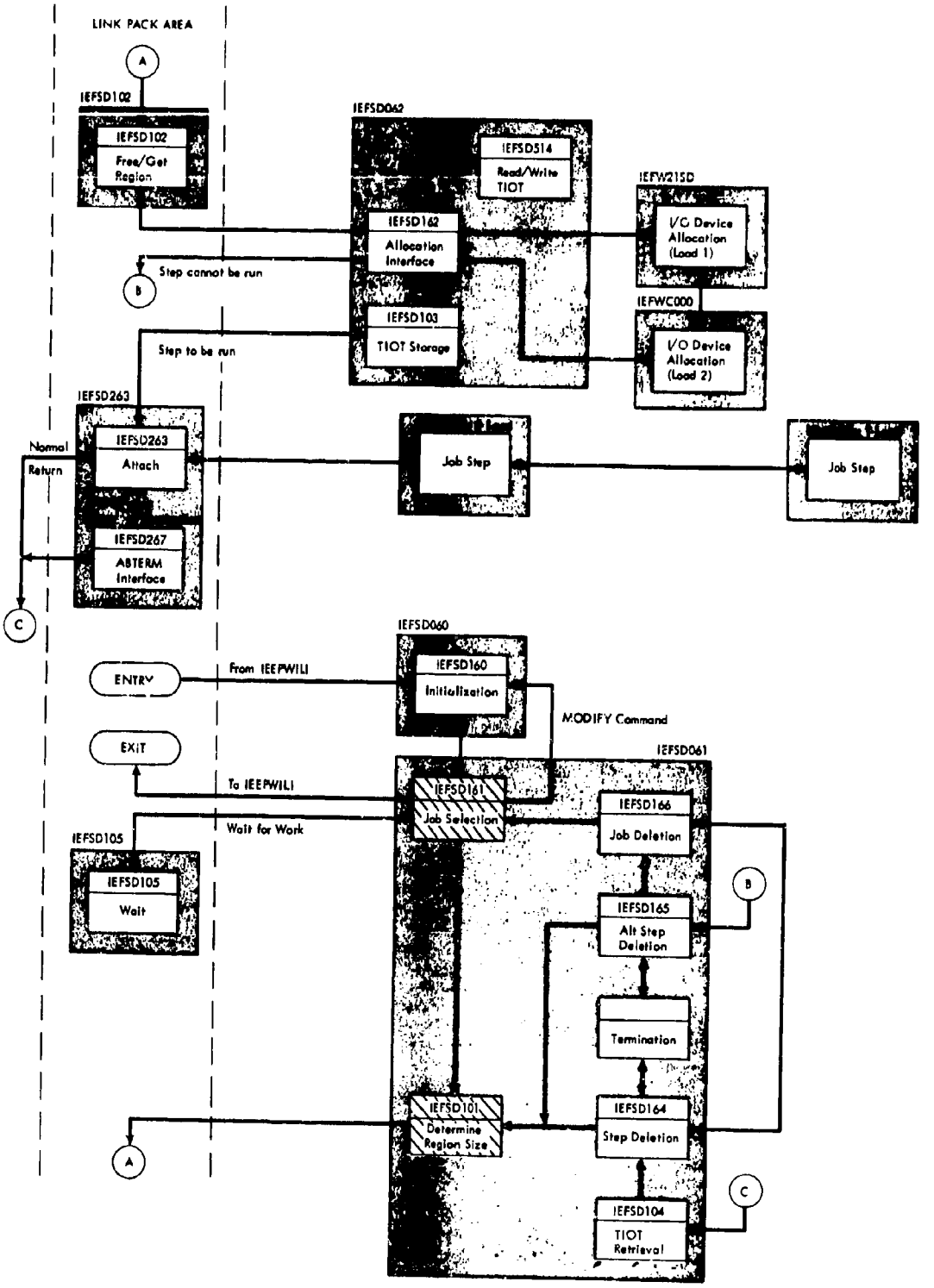

Fig. IV-2--Release 17

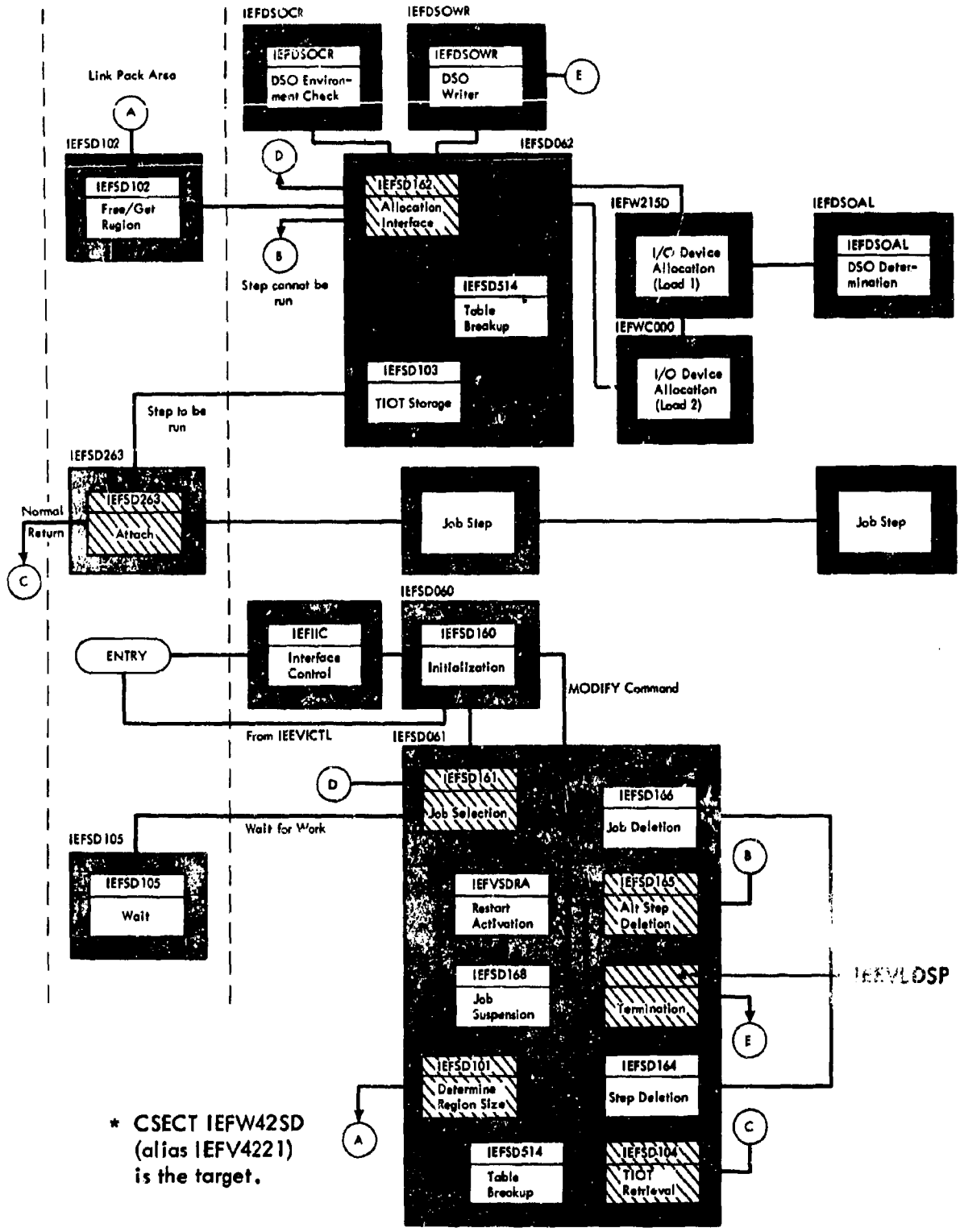

Fig. IV-3--Release 19

V. CONCLUSION

The Fixed Initiator facility is a stable and reliable modification to the MVT system at Rand which has accomplished our objectives and exceeded our expectations. Fixed Initiators can reserve storage for on-line systems, reserve storage for guaranteed access applications, and protect the batch processing from accidental execution in slower-speed storage. As a facility for memory management it has reduced the problems associated with controlling three access speeds of memory.

APPENDIX

The following listings reflect the control sections which have been modified in order to implement fixed initiation on OS/MVT Release 19.3. The patches are enclosed by rectangles.

```
         TITLE 'IEFSD101-MS/1 PARTITION REPLACE INTERFACE'                 00020000
IEFSD062 CSECT                                                             00040000
*                                                                    M4176 00042019
*2833 013800                                                        20768 00045018
*6092                                                                1500 00050014
*015361-015396,015700-016960,022200                                   1272 00055019
         BALR  R12,0                                                       00060000
*                                                                        * 00080000
************************************************************************** 00100000
*                                                                        * 00120000
*          IEFSD101-MS/1 PARTITION REPLACE INTERFACE                     * 00140000
*                                                                        * 00160000
************************************************************************** 00180000
*                                                                        * 00200000
* STATUS - CHANGE LEVEL 000                                              * 00220000
*                                                                        * 00240000
* FUNTION  TO DETERMIN THE PARTITION SIZES NEEDED FOR ALLOCATION      1272 00250019
*          FOR THE JOB STEP AND FOR TERRMINATION.                     1272 00260019
*                                                                        * 00280000
* ENTRY POINT: IEFSD062 FROM IEFSD161 AND IEFSD164 AND IEFSD166          * 00300000
*                                                                        * 00320000
*  INPUT:  REGISTER ONE CONTAINS THE LCT ADDRESS                         * 00340000
*                                                                        * 00360000
* OUTPUT: LCTPARM3 IN LCT CONTAINS SUBPOOL NO. AND PARTITION SIZE        * 00380000
*                                                                        * 00400000
* EXTERNAL REFERENCES - ABSOLUTE LOCATION 16 IS USED TO  PICK UP THE     * 00420000
*   ADDRESS OF THE CVT.                                                  * 00440000
*                                                                        * 00460000
* EXIT: IEFSD102 - PARTITION REPLACE MODULE                              * 00480000
*                                                                        * 00500000
* TABLES/WORKAREAS - LCT, SCT, MASTER SCHEDULER RESIDENT CORE AREA       * 00520000
*                                                                        * 00540000
* ATTRIBUTES - REENTRANT                                                 * 00560000
*                                                                        * 00580000
************************************************************************** 00600000
*                                                                        * 00620000
         USING *,R12                                                       00640000
         USING  IEFLOT,R10                                                 00660000
         USING IEFSCT,R9                                                   00680000
         EJECT                                                             00700000
************************************************************************** 00720000
*                                                                        * 00740000
* THE FOLLOWING SECTION OF CODE SERVES ONLY TO IDENTIFY THIS MODULE      * 00760000
* IN A MEMORY DUMP                                                       * 00780000
*                                                                        * 00800000
         B     FIRST                                                     * 00820000
         DC    X'CCCC'                                                   * 00840000
         DC    C'IEFSD101'                                               * 00860000
         DC    X'06081966'                                               * 00880000
         DC    X'CCCC'                                                   * 00900000
FIRST    DS    0H                                                        * 00920000
*                                                                        * 00940000
************************************************************************** 00960000
         EJECT                                                             00980000
         LR    R10,R1                    LCT ADDRESS                       01000000
         LR    R4,R13                                                  SMF1 01002018
         GETMAIN R,LV=72                                               SMF1 01004018
```

```
         LR    R13,R1                                                SMF1 01006018
         USING CVTDSECT,R1          CVT ADDRESSABILITY             M3849 01006219
         L     R1,CVTPTR            ADDRESS OF CVT PTR             M3849 01006419
         L     R1,CVTTCBP           GET TCB PTRS                   M3849 01006619
         DROP  R1                                                  M3849 01006819
         L     R1,D4(R1)            GET OUR TCB FOR SMF & ALLOC    M3849 01007019
         ST    R1,LCTTCBAD          PUT OUR TCB ADDR IN LCT        M3849 01007219
         LR    R1,R10                                                SMF1 01008018
         L     R15,VCONSMF              GO TO SMF INIT EXIT          SMF1 01010018
         BALR  R14,R15                  PASS LCT IN R1               SMF1 01012018
         FREEMAIN R,LV=72,A=(R13)                                    SMF1 01014018
         LR    R13,R4                                                SMF1 01016018
         L     R2,OMCAP                 LOAD PTR TO TRACK STACK INFO      01020000
         L     R2,0(R2)                 LOAD PTR TO STACK                 01040000
         LA    R2,0(R2)                 GET RID OFUPPER BYTE              01060000
         LTR   R2,R2                    IF ADDR IS ZERO, NO STACK- SO     01080000
         BC    8,SD101005               BRANCH AROUND                     01100000
         LR    R5,R13                   ADDR IS NOT ZERO - SAVE REG       01120000
         LR    R13,R2                   POINT TO SAVE AREA IN STACK       01140000
         LA    R1,OMGR1                 LOAD PTR TO OMPA                  01160000
         XC    OMPOP(1),OMPOP           CLEAR OP CODE  FOR PURGE RTN      01180000
*                                        NOT TO CONFUSE IT WITH DELETE    01200000
         L     R15,IFFSDSTP             ADDR OF STACK PURGE PGM           01220000
         BALR  R14,R15                  GO TO PURGE AND FREE THE STACK    01240000
         LR    R7,R15                   SAVE THE RETURN CODE              01260000
         LR    R1,R13                   LOAD PTR OF RETURNED SAVE AREA    01280000
         FREEMAIN R,LV=72,A=(1)          AND FREE IT                      01300000
         LR    R13,R5                   RESTORE REGISTER                  01320000
         LTR   R7,R7                    TEST RETURN CODE -- IF IT 0,      01340000
         BC    8,SD101005               RETURN WAS NORMAL, BRANCH         01360000
         LA    R1,X'080'                I/O ERROR IN TRACK          20768 01370018
         SLA   R1,12                    STACKING                    20768 01380018
         ABEND (R1),DUMP                DBO ABEND                   20768 01390018
SD101005 EQU   *                                                         01400000
         XC    LCTINTSW(D1),LCTINTSW  ZERO INTERNAL SWITCHES        I272 01410019
         L     R9,LCTSCTAD               GET SCT ADDRESS                 01420000
         L     R4,16                LOAD CVT ADDR                         01460000
         USING CVTDSECT,R4                                               01480000
         L     R5,CVTMSER           LOAD MASTER RES CORE ADDR             01500000
         USING BASE,R5                                                   01520000
         LH    R7,BAMINPAR           LOAD MINIMUM PARTITION SIZE          01520717
         DROP  R4                                                        01521417
         L     R4,LCTJCTAD           LOAD JCT ADDRESS                     01522117
         USING JCT,R4                                                    01522817
         TM    JCTJSTAT,JCTABEND     HAS ABEND OCCURED WHICH MIGHT        01523517
*                                     ALLOW A FOLLOWING STEP TO           01524217
*                                     EXECUTE                             01524917
         BZ    SD101006             NO, GO TEST JOB FAIL AND JOB          01525617
*                                     FLUSH BITS                          01526317
         TM    SCTABCND,SCTEVEN+SCTONLY                                  01527017
*                                   YES, IS THIS STEP TO RUN AFTER        01527717
*                                     THE ABEND                           01528417
         BZ    SD101007             NO, GO SET UP FOR MINPART             01529117
         CLI   SCTABCND+2,0         WERE EIGHT CONDITIONS PRESENT         01529817
*                                     FOR THIS STEP                       01530517
         BNE   SD101007             YES, NOT EVEN/ONLY, GO SET UP         01531217
*                                     TO GET MINPART                      01531917
```

```
         B      SD101008              THIS STEP WILL BE EXECUTED- GO        01532617
*                                     GET REQUESTED REGION                  01533317
SD101006 EQU    *                                                           01534017
         TM     JCTJSTAT,X'44'        IS JOB FAIL OR FLUSH BIT ON      CR17 01534717
         BZ     SD101008              NO, GO GET REQUESTED REGION           01535417
SD101007 OI     LCTINTSW,LCTMINRG     JOB FAIL INDICATE MINPAR         I272 01536419
         XC     SCTMSADR(D8),SCTMSADR  ZERO ADDRESSES                   I272 01537419
SD101008 EQU    *                                                           01540317
*  THIS  ROUTINE BUILDS THE GETPART WORK TABLE.THIS TABLE IS TO BE LS17 01543017
*  USED AS A PARAMETER LIST FOR LIST FORM OF GETMAIN TO OBTAIN A   LS17 01546017
*  REGION                                                          LS17 01549017
         LA     R0,GPMINPAR+4-GETPTWT LOAD LENGTH OF GWT             LS17 01552017
         LA     R8,TCORE              GET CORE FROM SUPERVISOR CORE  LS17 01555017
         SLL    R8,24                                                LS17 01558017
         OR     R0,R8                 PLACE SUBPOOL + LENGTH IN R0   LS17 01561017
         GETMAIN R,LV=(0)             GET CORE FOR GETPART WK TBLE   LS17 01564017
         LR     R8,R1                                                LS17 01567017
         USING GETPTWT,R8                                            LS17 01570017
         MVC    GPADDHO(8),SCTMSADR MOVE HIERARCHY ADDRESSES INTO    CR17 01573017
*                                          WORK TABLE                CR17 01576017
         SLL    R7,M10                MULTIPLY BY 1024               I272 01577019
         MVI    GPCODE,UNCONDGM                                      I272 01578019
         MVI    GPSUBP,POOL247        INDICATE SUBPOOL 247           I272 01579019
         ST     R7,GPMINPAR           SET UP FOR REGISTER FORM       I272 01580019
         MVI    GPMINPAR,POOL247      OF GETPART IF ERROR            I272 01581019
         MVC    GPADDHOR(D4),GPADDHO  SAVE ORIGINAL ADDRESS          I272 01582019
         LH     R11,SCTMSSZE          HO SIZE FROM SCT               I272 01583019
         SLL    R11,M10               MULTIPLY BY 1024               I272 01584019
         ST     R11,GPSIZEHO          SIZE INTO GWT                  I272 01585019
         LH     R3,SCTLCSSZ           H1 SIZE FROM SCT               I272 01586019
         SLL    R3,M10                MULTIPLY BY 1024               I272 01587019
         ST     R3,GPSIZEH1           SIZE INTO GWT                  I272 01588019
         MVI    GPSIZEH1,ENDLIST      INDICATE END OF LIST           I272 01589019
         TM     LCTOPSW2,LCTINTHO     TEST FOR HIER ZERO             I272 01590019
         BO     SD10110               BRANCH IF HIER ZERO            I272 01591019
         TM     LCTOPSW2,LCTINTH1     TEST FOR HIER ONE              I272 01592019
         BZ     SD10109               BRANCH NOT HIER ONE            I272 01593019
         OI     LCTINTSW,LCTIHIER     INIT RUN IN HIER ONE           I272 01594019
         AR     R3,R11               ADD REGION REQUESTS             I272 01595019
         ST     R3,GPSIZEH1          STORE IN H1 SIZE                I272 01596019
         MVI    GPSIZEH1,ENDLIST     INDICATE END OF LIST            I272 01597019
         XC     GPSIZEHO(D4),GPSIZEHO  ZERO HO SIZE                  I272 01598019
         B      SD10113                                              I272 01599019
SD10109  LTR    R11,R11               TEST FOR HO SIZE               I272 01600019
         BNE    SD101105                                             I272 01601019
         LTR    R3,R3                 TEST FOR  HIER ONE             I272 01602019
         BE     SD101105             BRANCH DEFAULT TO ZERO          I272 01603019
         OI     LCTINTSW,LCTIHIER     INIT RUN IN HIER ONE           I272 01604019
         B      SD10113                                              I272 01605019
SD10110  AR     R11,R3               ADD REGION REQUESTS             I272 01606019
         ST     R11,GPSIZEHO         STORE IN HO SIZE                I272 01607019
         XC     GPSIZEH1(D4),GPSIZEH1    ZERO H1 SIZE                I272 01608019
         SR     R3,R3                ZERO H1 SIZE IN REGISTER        I272 01609019
SD101105 LA     R14,GPADDHO          SET UP PTR TO ADDRESS           I272 01610019
         ST     R14,GPADDLT          LIST OF HIERARCHIES             I272 01611019
         LA     R14,GPSIZEHO         SET UP PTR TO REGION            I272 01612019
         ST     R14,GPSIZEA          SIZE LIST OF HIERARCHIES        I272 01613019
```

```
         LTR   R3,R3                 TEST FOR HIER ONE                I272 01614019
         BNE   SD10114               BRANCH IF THERE IS H1            I272 01615019
         MVI   GPSIZEH0,ENDLIST    SET HO SIZE AS END OF LIST         I272 01616019
         B     SD10114                                                I272 01617019
SD10113  LA    R14,GPADDH1         SET UP PTR TO ADDRESS LIST         I272 01618019
         ST    R14,GPADDLT         FOR HIERARCHY ONE                  I272 01619019
         LA    R14,GPSIZEH1        SET UP PTR TO REGION SIZE          I272 01620019
         ST    R14,GPSIZEA         STORE PTR                          I272 01621019
         CLR   R3,R7               COMPARE REQUEST WITH MINPAR        I272 01622019
         BNL   SD10124             BRANCH REQUEST GREATER             I272 01623019
         MVC   GPSIZEH1+D1(D3),GPMINPAR+D1  MOVE IN MINPAR SIZE       I272 01624019
         LR    R6,R3                 REQUEST SIZE IN R6               I272 01625019
         B     SD10115                                                I272 01626019
SD10114  CLR   R11,R7                COMPARE REQUEST WITH MINPAR      I272 01627019
         BNL   SD10124             BRANCH REQUEST GREATER             I272 01628019
         MVC   GPSIZEH0+D1(D3),GPMINPAR+D1  MOVE IN MINPAR SIZE       I272 01629019
         LR    R6,R11              REQUEST IN R6                      I272 01630019
SD10115  TM    LCTINTSW,LCTMINRG     TEST FOR JOB FAIL                I272 01631019
         BZ    SD10116               BRANCH JOB NOT FAILED            I272 01632019
SD101155 TM    LCTINTSW,LCTIHIER   TEST FOR HIERARCHY                 I272 01633019
         BZ    SD101165              BRANCH HIERARCHY ZERO            I272 01634019
         NC    GPSIZEH0(D4),GPSIZEH0  ZERO HIERARCHY ZERO SIZE        I272 01635019
         MVC   GPSIZEH1+D1(D3),GPMINPAR+D1  MOVE MINPAR SIZE          I272 01636019
         B     SD10125                                                I272 01637019
SD101165 XC    GPSIZEH1(D4),GPSIZEH1  ZERO H1 SIZE                    I272 01638019
         MVI   GPSIZEH0,ENDLIST      INDICATE END OF LIST             I272 01639019
         MVC   GPSIZEH0+D1(D3),GPMINPAR+D1  MOVE IN MINPAR SIZE       I272 01640019
         B     SD10125                                                I272 01641019
SD10116  OC    BAMIPAR2(D2),BAMIPAR2  IS TERM IN LPA                  I272 01642019
         BE    SD10120               BRANCH NOT IN LPA                I272 01643019
         TM    LCTINTSW,LCTIHIER   INIT IN HIERARCHY ONE              I272 01644019
         BO    SD101166            BRANCH HIERARCHY ONE               I272 01645019
         OC    GPADDH0+D1(D3),GPADDH0+D1  SPECIFIC REQUEST            I272 01646019
         BE    SD10117             BRANCH NOT SPECIFIC                I272 01647019
         SR    R7,R11              R7=(MINPAR-S)                      I272 01648019
         L     R2,GPADDH0          GET REQUESTED ADDRESS              I272 01649019
         SR    R2,R7               R2=A-(MINPAR-S)                    I272 01650019
         ST    R2,GPADDH0          NEW ADDRESS IN PARM                I272 01651019
         B     SD10117                                                I272 01652019
SD101166 OC    GPADDH1+D1(D3),GPADDH1+D1  SPECIFIC REQUEST            I272 01653019
         BE    SD10117             BRANCH NOT SPECIFIC                I272 01654019
         SR    R7,R3               R7=(MINPAR-S)                      I272 01655019
         L     R2,GPADDH1          GET REQUESTED ADDRESS              I272 01656019
         LA    R2,0(R2)            CLEAR HIGH ORDER BYTE              I272 01657019
         SR    R2,R7               R2=(A-(MINPAR-S)                   I272 01658019
         ST    R2,GPADDH1          NEW ADDRESS IN PARM                I272 01659019
         MVI   GPADDH1,HEX01       INDICATE HIERARCHY ONE             I272 01660019
SD10117  LH    R7,BAMIPAR2         LOAD MIN-MIN SIZE                  I272 01660519
         SLL   R7,M10              MULTIPLY BY 1024                   I272 01661019
         CLR   R6,R7               IS REQUEST GREATER THEN MIN-MIN    I272 01661519
         BNH   SD10118               BRANCH MIN-MINPAR GREATER        I272 01662019
         ST    R6,GPSIZEPP           USE REQUEST FOR P/P              I272 01663019
         B     SD10126                                                I272 01664019
SD10118  EQU   *                                                      I272 01665019
         TM    LCTOPSW1,LCTMINPF     SMALL REGION FLAG                I272 01667019
         BO    SD10119               BRANCH NO SMALL REGION           I272 01668019
         ST    R7,GPSIZEPP           USE MIN-MINPAR FOR P/P           I272 01669019
```

```
         B      SD10126                                                I272 01670019
SD10119  ST     R6,GPSIZEPP          USE REQUEST FOR P/P               I272 01671019
         ST     R7,GPSIZET           USE MIN-MINPAR FOR TERM           I272 01672019
         B      SD10127                                                I272 01673019
SD10120  TM     LCTOPSW1,LCTMINPF    SMALL PARTITION OPTION            I272 01674019
         BZ     SD10125              BRANCH NO                         I272 01675019
         ST     R6,GPSIZEPP          USE REQUEST FOR P/P               I272 01676019
         ST     R7,GPSIZET           USE MIN/MINPAR FOR TERM           I272 01677019
         B      SD10127                                                I272 01678019
SD10124  TM     LCTINTSW,LCTMINRG  TEST FOR JOB FAIL                   I272 01679019
         BO     SD101155           BRANCH IF JOB FAILED                I272 01680019
SD10125  XC     GPSIZEPP(D4),GPSIZEPP                                  I272 01681019
SD10126  XC     GPSIZET(D4),GPSIZET ZERO TERMINATE SIZE                I272 01682019
SD10127  EQU    *                                                      I272 01683019
SD101C4  LA     R8,0(R8)                 ZERO HIGH ORDER BYTE          LS17 01699017
         ST     R8,LCTPARM3              GETMAIN PARAM FOR IEFSD102    LS17 01702017
         L      R1,LCTQDRTY        ADDRESS OF CSCB                    M4176 01702619
         USING  IEFCSCB,R1                                            M4176 01703219
         TM     CHSWT,CHSYS        IS THIS A SYSTEM TASK              M4176 01703819
         BO     SKIPCHAP           BRANCH SYSTEM TASK - SKIP CHAP     M4176 01704419
         DROP   R1                                                    M4176 01705019
         SR     R1,R1                CLEAR REGISTER                    I241 01706018
         LA     R0,15                PUT 15 IN REG                     I241 01710018
         IC     R1,LCTQDRTY          LOAD JOB SCHEDULING PRIORITY      I241 01714018
         SR     R0,R1                GET 15-PRTY                       I241 01718018
         LNR    R0,R0                NEGATE REGISTER                   I241 01722018
         SR     R1,R1                CLEAR REGISTER                    I241 01726018
         CHAP   (0),(1)              CHAP DOWN BY 15-PRTY              I241 01730018
SKIPCHAP EQU    *                                                    M4176 01735019
         LR     R1,R10                     RESTORE LCT ADDRESS              01740000
         L      15,16            MOTHER CVT                                  0120
         L      15,0(0,15)       DOUBLEWORD                                  0121
         L      15,4(0,15)       THE TCB                                     0122
         L      15,12(0,15)      OUT TIOT                                    0123
         CLI    0(15),C'F'       FIXED PARTITION?                            0124
         BNE    NORMAL           NO - PROCEED NORMALLY                       0125
         CLI    FTTF,X'FF'            CHECK FIRST TIME THRU FLAG.
         BE     HITIT                 ALLOW FIXED INITIATION.
         MVI    FTTF,X'FF'            SET FTTF TO ALLOW  FI NEXT TIME.
         B      NORMAL                LET IT GO THIS TIME.
FTTF     DC     X'00'                 FIRST TIME THRU FLAG.
HITIT    L      R1,LCTPARM1           GET DS ENQ TABLE.
         LTR    R1,R1            IS IT ZERO?                                 0127
         BZ     LACTATE          YEAH                                        0128
         LA     R1,8(0,R1)       ENQ ON THE                                  0129
         SVC    56               JOB'S DATASETS                              0130
         L      R0,LCTPARM2      FREE UP DS ENQ                              0131
         L      R1,LCTPARM1      TABLE CORE                                  0132
         SVC    10               ........                                    0133
LACTATE  LR     R1,R10           RESTORE LCT POINTER                         0134
         XCTL   EP=IEFSD062      GO TO MEMBER IEFSD062                       0135
NORMAL   DS     0H                                                          0136
         XCTL   EP=IEFSD102,MF=(E,(1))                                 01760000
IEFSDSTP DC     V(IEFSD112)        ADDR OF TRACK STACK PURGE PGM      01780000
VCONSMF  DC     V(IEFSMFIE)                *                     SMF1 01790018
R0       EQU    0                                                     01800000
R1       EQU    1                                                     01820000
```

```
R2        EQU   2                                                    01840000
R3        EQU   3                                                    01860000
R4        EQU   4                                                    01880000
R5        EQU   5                                                    01900000
R6        EQU   6                                                    01920000
R7        EQU   7                                                    01940000
R8        EQU   8                                                    01960000
R9        EQU   9                                                    01980000
R10       EQU   10                                                   02000000
R11       EQU   11                                                   02020000
R12       EQU   12                                                   02040000
R13       EQU   13                                                   02060000
R14       EQU   14                                                   02080000
R15       EQU   15                                                   02100000
TCORE     EQU   253                                             LS17 02110017
CVTDSECT  DSECT                                                      02120000
UNCONDGM  EQU   X'80'                                           I272 02121019
M10       EQU   10                                             I272 02122019
ENDLIST   EQU   X'80'                                          I272 02123019
D1        EQU   1                                              I272 02124019
D2        EQU   2                                              I272 02125019
D3        EQU   3                                              I272 02126019
D4        EQU   4                                              I272 02127019
D8        EQU   8                                              I272 02128019
POOL247   EQU   247                                            I272 02129019
HEX01     EQU   X'01'                                          I272 02130019
          CVT                                                        02140000
  IEEBASEA
IEFLOT    DSECT                                                      02180000
 IEFALLCT                                                            02200000
          DS    3F                                               I272 02204019
LCTINTSW  DS    0C                  INITIATOR INTERNAL SWITCHES  I272 02208019
LCTIHIER  EQU   128                                              I272 02212019
LCTSTOP   EQU   4                   INITIATOR INTERNAL STOP      I272 02216019
LCTABEND  EQU   2                   P/P ABBENDED                 I272 02220019
LCTMINRG  EQU   16                                               I272 02224019
LCTSPLP   DS    F                                                    02228019
          DS    42F                                              I272 02232019
QMGR1     DS    9F                      MAIN QMGR PARAMETER AREA     02240000
QMGR2     DS    9F                      'ALTERNATE' QMGR PARAMETER AREA 02260000
TRSTKINF  DS    2F                NEEDED FOR TRACK STACKING AND QUEUE 02280000
*                                 BREAK INFORMATION.  1ST BYTE TO CON- 02300000
*                                 TAIN  NUMBER OF BUFFERS, NEXT 3 BYTES 02320000
*                                 FOR STACK ADDR, NEXT 4 BYTES FOR     02340000
*                                 QUEUE BREAK INFORMATION              02360000
QMCAP     EQU   QMGR1+24          PTR IN QMPA TO TRK STACK INFO        02380000
QMPOP     EQU   QMGR1+8           QMGR OP CODE IN QMPA AREA            02400000
          DS    6F                                               I272 02400219
*   THESE FIELDS ARE NEEDED FOR L-SHAPE/INIT MERGE              *  I272 02400419
LCTOPSW1  DS    0C                  INITIATOR OPTIONS BYTE 1     I272 02400619
LCTPKEYF  EQU   128                 DONT GET PROTECT KEY         I272 02400819
LCTDWFF   EQU   64                  DONT PROCESS DEDICATED WORKF I272 02401019
LCTSTMDF  EQU   32                  DONT PROCESS STOP/MODIFY     I272 02401219
LCTMINPF  EQU   16                  GET REGION SIZE SPECIFIED    I272 02401419
LCTCANF   EQU   8                   ALLOW CANCEL ONLY AT ALLOC   I272 02401619
LCTONEJF  EQU   4                   PROCESS ONLY ONE JOB         I272 02401819
LCTICMDF  EQU   2                   DONT PROCESS INITIATOR CMDS  I272 02402019
```

```
LCTEXIT  DS     F                    ADDRESS INITIATOR EXIT LIST      I272 02402219
LCTOPSW2 DS     0C                   INITIATOR OPTIONS BYTE 2         I272.02402419
LCTTIMEF EQU    128                  DONT TIME THIS JOB               I272 02402619
LCTCRF   EQU    64                   DONT ALLOW CHECKPT/RESTART       I272 02402819
LCTDSOF  EQU    32                   DONT PROCESS DSO                 I272 02403019
LCTINTH0 EQU    16                  H0 SPECIFIED ON START COMMAND     I272 02403219
LCTINTH1 EQU    8                   H1 SPECIFIED ON START COMMAND     I272 02403419
LCTCOM   DS     F                    COMMUNICATIONS PARM AREA PTR     I272 02403619
         EJECT                                                              02404017
JCT      DSECT                                                              02408017
         IEFAJCTB                                                           02412017
         EJECT                                                              02413019
IEFCSCB  DSECT                                                              02414019
         IEECHAIN                                                           02415019
         EJECT                                                              02416017
IEFSCT   DSECT                                                              02420000
 IEFASCTB                                                                   02440000
GETPTWT  DSECT                                                              02441017
GPSIZEA  DS     1F        CONTAIN THE ADDRESS OF THE REGION SIZE LI LS17 02442017
GPADDLT  DS     1F        CONTAIN THE ADDR OF ADDR LIST FOR THE HIE LS17 02443017
GPCODE   DS     X'0'      CONTAIN 80 TO INDICATE UNCONDITIONAL REGU LS17 02444017
GPSUBP   DS     X'0'      CONTAIN SUBPOOL 247 OR 246                LS17 02445017
         DS     H'0'                                                LS17 02446017
GPHIARC0 DS     0F        CONTAINS  00                              LS17 02447017
GPADDH0  DS     1F        CONTAINS ADDRESS(SPECIFIC) ,ZERO(NON-SPEC LS17 02448017
GPHIARC1 DS     0F        CONTAINS  01                              LS17 02449017
GPADDH1  DS     1F        CONTAINS ADDRESS(SPECIFIC) ,ZERO(NON-SPEC LS17 02450017
GPSIZEH0 DS     1F        SIZE OF H0                                LS17 02451017
GPSIZEH1 DS     1F        SIZE OF H1                                LS17 02452017
GPSIZEPP DS     1F        REGION SIZE FOR P/P                       I272 02452319
GPSIZET  DS     1F        REGION SIZE FOR TERMINATE                 I272 02452619
GPADDHOR DS     1F        ORGINAL ADDRESS                           CR17 02453017
GPMINPAR DS     1F        247 + MINIMUM REGION SIZE                 CR17 02454017
         END                                                                02460000
```

```
         TITLE 'IEFSD161 VMS JOB SELECT MODULE'                          00020000
IEFSD061 CSECT                                                           00040000
*                                                                 A21364 00045019
*037880                                                            M0429 00050018
*                                                                        00051019
*  RELEASE 19    -  -  -                                                00052019
* 037700-037970,124053-124062                                     A27668 00052519
* 033800-034400,059400-061000,089600-091000,107800-108400            D99 00053019
* 124000-127000                                                      D99 00054019
*                                                                        00055019
*                                                                        00056019
*                                                                        00057019
*                                                                        00058019
*                                                                        00059019
*********************************************************************** 00060000
*                                                                     * 00080000
*                          JOB SELECT MODULE                          * 00100000
*                                                                     * 00120000
*********************************************************************** 00140000
*                                                                     * 00160000
*                                                                        00180000
*STATUS: CHANGE LEVEL 000                                                00200000
* FUNCTION:  TO GET THE HIGHEST PRIORITY JOB FROM THE QUEUE, READ THE * 00220000
*        APPROPRIATE SCT FOR THE JOB,AND SET UP THE MESSAGE CLASS  CR17 00240017
*        QUEUE MANAGER PARAMETER AREA.                             CR17 00260017
*            ALSO,                                                       00280000
*            TO PREPARE A DATA SET ENQ PARAMETER LIST AND              * 00300000
*            A DSNAME DEQ TABLE                                        * 00320000
*               CONDITIONALY INVOKE A DIRECT SYSOUT (DSO)           D99 00322019
*               ROUTINE TO SELECT ELIGIBLE DSO DEVICES TO BE        D99 00324019
*               USED BY THE DEQUEUED JOB.  JOB CLASS AND            D99 00326019
*               SYSOUT CLASS ARE USED TO SELECT ELIGIBLE DSO        D99 00328019
*               DEVICES.  DIRECT SYSOUT CONTROL BLOCKS (DSOCB)      D99 00330019
*               CONTAIN NECESSARY DATA FOR SELECTION AND            D99 00332019
*               MODIFICATION OF THE RESPECTIVE SYSOUT'S SIOT        D99 00334019
*               AND JFCB TO THAT OF THE DSO DEVICE.                 D99 00336019
*                                                                        00340000
*   ENTRY POINTS - IEFSD161 FROM IEFSD160,IEFSD166,AND IEFSD105          00360014
*                                                                        00380000
* INPUT:  REGISTER ONE CONTAINS THE LCT ADDRESS                         * 00400000
*                                                                       * 00420000
* OUTPUT:  REGISTER ONE CONTAINS THE LCT ADDRESS AND THE LCT CONTAINS * 00440000
*          THE CURRENT JCT AND SCT CORE ADDRESSES                       * 00460000
*                                                                       * 00480000
*                                                                        00500000
*EXTERNAL ROUTINES: IEFQMDQ2 - REQUEST WORK                              00540000
*                   IEFQMUNC - DELETE WORK REQUEST                       00560000
*                   IEFQMRAW - Q MNGR READ/WRITE ROUTINE                 00580000
*                   IEFDSTBL - DATA SET INTEGRITY                        00600000
*                   IEFDSLST - DATA SET INTEGRITY                        00620000
*                                                                        00640000
*                                                                       * 00660000
*   EXITS - 1. JOB TO PROCESS - IEFSD162                                 00670014
*           2. STOP INIT - BACK TO MASTER                                00680014
*           3. MODIFY INITIATOR - IEF060SD                              * 00686015
*           4. WAIT FOR WORK - IEFSD105                                 * 00692015
*           5. DIRECT SYSOUT (DSO) SELECTION - IEFDSOSL             D99 00694019
```

```
*                                                                    099 00696019
* EXTERNAL REFERENCES: IEFQSSS,IEFDSTBL                                 00700000
*  TABLES/WORK AREAS:  JCT,SCT, LIFE OF TASK BLOCK, AND JOB CSCB ARE  * 00720000
*                      IN MAIN STORAGE AT EXIT                        * 00740000
*                      QUEUE MANAGER RESIDENT CORE AREA               * 00760015
*                      DIRECT SYSOUT CONTROL BLOCKS (DSOCB)         099 00770019
*                                                                     * 00780015
*ATTRIBUTES  REENTRANT                                                * 00800015
*                                                                     * 00820015
*                                                                     * 00840000
************************************************************************ 00860000
         EJECT                                                          00880000
R0       EQU   0                                                        00900000
R1       EQU   1                                                        00920000
R2       EQU   2                                                        00940000
R3       EQU   3                                                        00960000
R4       EQU   4                                                        00980000
R5       EQU   5                                                        01000000
R6       EQU   6                                                        01020000
R7       EQU   7                                                        01040000
R8       EQU   8                                                        01060000
R9       EQU   9                                                        01080000
R10      EQU   10                                                       01100000
R11      EQU   11                                                       01120000
R12      EQU   12                                                       01140000
R13      EQU   13                                                       01160000
R14      EQU   14                                                       01180000
R15      EQU   15                                                       01200000
         BALR  R12,0                    SET PROGRAM BASE REGISTER       01220000
         USING IEFJCT,R11                                               01240000
         USING IEFLOT,R10                                               01260000
         USING IOPARAMS,R9                                              01280000
         USING RSAR,R13                                                 01310014
         USING *,R12                                                    01320000
************************************************************************ 01340000
*                                                                     * 01360000
*  THIS SECTION OF CODE IS FOR PROVIDING A METHOD OF IDENTIFYING      * 01380000
*                THIS MODULE IN A MEMORY DUMP                         * 01400000
*                                                                     * 01420000
         B     FIRST                                                  * 01440000
         DC    X'CCCC'                                                * 01460000
         DC    C'IEFSD161'                                              01480000
         DC    X'05031966'                                              01500000
FIRST    DS    0H                                                     * 01520000
*                                                                     * 01540000
************************************************************************ 01560000
         EJECT                                                          01580000
         LR    R10,R1              GET BASE FOR LIFE OF TASK BLOCK      01610015
         LA    R9,QMGR1            GET BASE FOR QUEUE MANAGER PARAMETER 01640014
*                                  AREA(QMPA)                           01670014
         LA    R13,REGSAVE         GET BASE FOR RSAR DSECT(THE 1ST 18   01700014
*                                  WORDS OF WHICH SERVE AS A SAVE AREA  01730014
*                                  FOR THIS PROGRAM)                    01760014
         TM    LCTOPSW1,LCTSTMDF   STOP/MODIFY PROCESSING WANTED    I272 01760419
         BNO   ECBTEST             YES, GO CHECK FOR STOP             I272 01760819
         TM    LCTINTSW,LCTSTOP    INTERNAL STOP WANTED               I272 01761219
         BNO   SD612021            NO, GO PROCESS THE JOB             I272 01761619
```

```
         B      SD061037            YES GO PREPARE TO STOP          I272 01762019
ECBTEST  EQU    *                   TEST FOR EXTERNAL STOP          I272 01762419
         L      R8,ECBLIST          GET POINTER TO ECB LIST              01763015
         L      R1,0(R8)            LOAD ADDRESS OF COMMUNICATION ECB    01766015
         TM     0(R1),STOPBIT       IS THE STOP BIT POSTED               01769015
         BO     SD61550             YES BRANCH TO STOP                   01772015
SD61549  EQU    *                                                        01775015
         USING  COMPA,R2            COMM PARM AREA ADDRESSABILITY   I272 01776019
         L      R2,LCTCOM           NO, COMM PARM AREA PTR -CPA     I272 01777019
         L      R3,COMCIBPT         POINTER TO CIB                  I272 01778019
         DROP   R2                                                  I272 01779019
         LA     R3,0(R3)            GET RID OF HIGH ORDER BYTE           01784015
         LTR    R3,R3               IS IT ZERO                           01787015
         BZ     SD612021            YES, BRANCH AND SCAN REST OF ECBLIST 01790015
         BAL    R7,SD612270         BRANCH TO UNCHAIN ECBS               01796015
*                ADDRESS OF LCT IS IN R10 FOR IEFSD160               I272 01798019
         L      R15,IEFSD60V        ADDRESS OF MODULE IEFSD060           01801015
         BR     R15                 GO TO IEFSD060                       01803015
SD61550  NI     0(R1),X'AF'         TURN OFF POST AND STOP BITS          01805015
         ENQ    MF=(E,IEFSD61C)     ENQ ON GROUP CONTROL BLOCK CHAIN     01808015
         L      R7,CVTPTR           LOAD POINTER TO CVT                  01811015
         USING  CVTDSECT,R7                                              01814015
         L      R7,CVTMSER          LOAD ADDRESS OF BASE A               01817015
         USING  BASE,R7                                                  01820015
         LA     R5,BATRM            LOAD ADD OF GCB POINTER              01823015
         L      R4,BATRM            LOAD GCB POINTER                     01826015
         DROP   R7                                                       01829015
SD61551  EQU    *                                                        01832015
         CLC    16(8,R4),LCTIDENT   ARE IDENTIFIERS EQUAL                01841015
         BE     SD61552             YES, BRANCH AND CONTINUE             01844015
         LA     R5,4(R4)            NO, SAVE ADDRESS OF LAST GCB PLUS 4  01847015
         L      R4,4(R4)            LOAD POINTER TO NEXT GCB             01850015
         B      SD61551             BRANCH AND CHECK THIS GCB            01853015
SD61552  EQU    *                                                        01856015
         SR     R7,R7               ZERO OUT REGISTER                    01859015
         IC     R7,25(R4)           SET STOP COUNT                       01862015
         LTR    R7,R7               IS STOP COUNT ZERO                   01865015
         BNZ    SD61553             NO, BRANCH AND CONTINUE              01868015
         USING  COMPA,R2            COMMUN PARM AREA ADDRESSABLITY  I272 01868219
         L      R2,LCTCOM           ADDRESS OF COMMUN PARM AREA     I272 01868419
         L      R1,COMCIBPT         ADDRESS OF CIB                  I272 01868619
         USING  CIBDSECT,R1         CIB ADDRESSABILITY              I272 01868819
         LTR    R1,R1               IS THERE A CIB                  I272 01869019
         BZ     SD61549A            NO, GO CHECK FOR MODIFY         I272 01869219
         CLI    CIBVERB,CIBSTOP     IS THIS STOP CIB                I272 01869419
         BNE    SD61549A            NO, GO CHECK FOR MODIFY         I272 01869619
         LA     R0,COMCIBPT         ADDRESS OF CIB PTR              I272 01869819
         DROP   R2                                                  I272 01870019
         B      FREESTOP            GO FREE STOP CIB                I272 01870219
SD61549A EQU    *                                                  I272 01870419
         DEQ    MF=(E,IEFSD61C)     DEQ ON GROUP CONTROL BLOCK CHAIN     01871015
         B      SD61549             GO CHECK FOR MODIFY                  01874015
SD61553  EQU    *                                                        01877015
         BCTR   R7,R0               DECREMENT STOP COUNT                 01880015
         STC    R7,25(R4)           STORE STOP COUNT                     01883015
         LA     R0,28(R4)           ADDRESS OF CIB POINTER IN GCB        01883718
         L      R1,28(R4)           POINTER TO THE CIB                   01884418
```

```
FREESTOP EQU   *                                                  I272 01884719
         QEDIT BLOCK=(1),ORIGIN=(0)     FREE THE STOP CIB               01885118
         IC    R7,24(R4)          LOAD MEMBER COUNT                    01886015
         BCTR  R7,R0              DECREMENT MEMBER COUNT               01889015
         LTR   R7,R7              IS MEMBER COUNT ZERO                 01892015
         BNZ   SD61554            NO, BRANCH AND CONTINUE              01895015
         MVC   0(4,R5),4(R4)      YES,MOVE POINTER TO NEXT GCB         01898015
*                                 INTO LAST GCB                        01901015
         LH    R0,0(R4)           LOAD LENGTH OF GCB                   01904015
         LA    R1,255             LOAD SUBPOOL                         01907015
         SLL   R1,24              MOVE SUBPOOL TO HIGH ORDER BYTE      01910015
         OR    R0,R1              OR IN SUBPOOL NUMBER                 01913015
         LR    R1,R4              LOAD ADDRESS OF GCB                  01916015
         FREEMAIN R,LV=(0),A=(1)  FREE GCB                             01919015
         B     SD61555            BRANCH AND CONTINUE                  01922015
SD61554  EQU   *                                                      01925015
         STC   R7,24(R4)          STORE MEMBER COUNT                   01928015
         USING COMPA,R7           CPA ADDRESSABILITY               I272 01929019
         L     R7,LCTCOM          CPA POINTER                      I272 01930019
         L     R7,COMCIBPT        ADDRESS OF CIB                   I272 01931019
         DROP  R7                                                  I272 01932019
         LA    R7,0(R7)           GET RID OF HIGH ORDER BYTE           01937015
         LTR   R7,R7              IS A MODIFY OUTSTANDING              01940015
         BZ    SD61555            NO, BRANCH AND CONTINUE              01943015
         SR    R7,R7              YES, ZERO REGISTER                   01946015
         IC    R7,26(R4)          LOAD MODIFY COUNT                    01949015
         BCTR  R7,R0              DECREMENT MODIFY COUNT               01952015
         STC   R7,26(R4)          PUT MODIFY COUNT BACK                01955015
SD61555  EQU   *                                                      01958015
         DEQ   MF=(E,IEFSD61C)    DEQ ON GROUP CONTROL BLOCK CHAIN     01961015
         B     SD061037                                               01964015
SD612021 EQU   *                                                      01967015
         L     R11,LCTJCTAD       LOAD ADDRESS OF JCT              I272 01975019
         LTR   R11,R11            IS THERE AN IN-CORE JCT          I272 01983019
         BNZ   JCTIN              YES, DONT GET CORE FOR JCT       I272 01991019
         GETMAIN R,LV=176,SP=TCORE GET CORE FOR JCT                    02000014
         LR    R11,R1             GET BASE FOR JCT                     02030014
*********************************************************************** 02060014
SD612020 EQU   *                                                      02080015
         LA    R8,4(R8)           POINT TO NEXT ECB POINTER            02100015
         L     R1,0(R8)           LOAD ECB POINTER                     02120015
         TM    0(R1),POSTBIT      IS IT POSTED                         02140015
         BO    SD612010           YES, BRANCH TO SET UP FOR Q-MANAGER  02160015
SD612030 EQU   *                                                      02180015
         TM    0(R8),ENDBIT       IS THIS END OF ECB LIST              02200015
         BZ    SD612020           NO, BRANCH AND CHECK NEXT ECB        02220015
         B     SD061028           YES, SET UP FOR WAIT ROUTINE         02240015
*********************************************************************** 02660014
*        SET UP TO GO TO QUEUE MANAGER AND SEE IF THERE IS WORK       * 02690014
*********************************************************************** 02720014
SD612010 EQU   *                                                      02740015
         LA    R3,REMLST          LOAD ADDRESS OF REMOTE AREA          02760015
         ST    R3,QMPCL           PLACE ADDRESS IN QMPA                02780015
         MVI   QMPOP,QMDTOP       INDICATE DEQUEUE                     02800015
         MVC   QMTPY(1),4(R1)     INDICATE JOB CLASS                   02820015
         ST    R11,LCTJCTAD            PUT JCT CORE ADDR IN LCT        02870014
         ST    R11,REMLST              PUT JCT CORE ADDR IN REMOTE     02900014
```

```
*                                          LIST                                 02930014
         XC    REMLST+4(4),REMLST+4        ZERO TTR SLOT IN REMOTE LIST         02960014
         ST    R1,OMCAN                                                         03020015
         L     R15,IEFQMVCN                GET ADDR OF Q MANAGER RTN            03110014
         LR    R1,R9                       QMPA ADDR INTO R1                    03140014
         BALR  R14,R15                     GO TO QUEUE MANAGER TO TRY TO        03170014
*                                          GET WORK                             03200014
         B     SD061020(R15)               BRANCH INDEXED BY RETURN CODE        03230014
SD061020 B     SD061040              JOB DEQUEUED - GO TO PROCESS IT            03260014
         B     SD612030              NO WORK, CONTINUE CHECKING                 03290015
         BC    0,SD061020                  NO-OP,NO SPACE                       03320014
***** I/O ERROR ***** TEMP ABEND AND LOOP                                       03350014
         B     BADIO      COND CODE=12, GO TO ABEND ROUTINE            099 03410019
*****           *****                                                           03470014
SD061028 TM    WTOSWTCH,X'FF'        CHECK TO SEE IF 'INPUT QUEUE EMPTY'        03500014
*                                    MESSAGE HAS ALREADY BEEN PUT OUT           03530014
*                                    ONCE DURING THIS INITIATOR'S WAIT          03560014
*                                    FOR WORK                                   03590014
         BC    8,SD061030            YES - BRANCH AROUND WTO                    03620014
         NI    WTOSWTCH,X'00'        TURN OF SWITCH SO MESSAGE WILL NOT         03650014
*                                    BE PUT OUT AGAIN UNTIL AFTER THIS          03680014
*                                    INIT HAS RECEIVED WORK AND PROCESSED 03710014
*                                    IT AND GONE INTO A WAIT AGAIN              03740014
         LA    R0,WTO429EX      SIZE OF WTO AND INIT ID              A27668 03742019
         GETMAIN R,LV=(0)      CORE FOR MSG                            A27668 03744019
*            R1 WILL BE MAINTAINED FOR MSG AREA BASE                  A27668 03746019
         L     R2,MSGAD         WTO CSECT                               A27668 03748019
         MVC   D0(WTO429A,R1),D0(R2)  1ST HALF OF WTO MSG & QUOTEA27668 03750019
         LA    R15,WTO429A(,R1)      WHERE INIT ID IS TO GO               A27668 03752119
         LR    R0,R15                SAVE FOR LENGTH (LNG) COMPUTE A27668 03753019
         MVC   D0(D8,R15),LCTIDENT INIT FOR MSG                         A27668 03757019
         LA    R14,D8           LOOP LIMITING REG                       A27668 03758019
*          WILL NOW FIND 1ST BLANK IN ID IF ONE                          A27668 03760019
SD61750  CLI   D0(R15),BLANK    IS ID BYTE BLANK                        A27668 03762019
         BE    SD61751          YES - END OF ID                         A27668 03764019
         LA    R15,D1(,R15)     NO - TEST NEXT HIGHER BYTE              A27668 03766019
         BCT   R14,SD61750      LOOP IF NOT END OF ID SCAN              A27668 03768019
*   R15 NOW POINTS TO BYTE AFTER END OF ID                               A27668 03770019
SD61751  MVC   D0(WTO429B,R15),WTO429A(R2)    LAST HALF OF MSG          A27668 03772019
*                               STARTING WITH SECOND QUOTE               A27668 03774019
         SR    R15,R0           COMPUTE ID LNG                          A27668 03776019
         AH    R15,D0(,R1)      ADD WTO MSG LNG TO THIS VALUE           A27668 03778019
         STH   R15,D0(,R1)      UPDATE WTO MSG LNG                      A27668 03780019
         LR    R2,R1            SAVE MSG ADR                            A27668 03782019
         WTO   MF=(E,(1))       ISSUE MSG TO OPERATOR                   A27668 03784019
         LA    R0,WTO429EX      SIZE OF WTO AND INIT ID                 A27668 03786019
         LR    R1,R2            SET R1 AGAIN WITH MSG CORE ADR          A27668 03788019
         FREEMAIN R,LV=(0),A=(1)    FREE MSG CORE                       A27668 03790019
SD061030 LR    R1,R11                GET JCT ADDRESS                          03810014
         FREEMAIN R,LV=176,A=(1),SP=TCORE          FREE JCT CORE              03820014
         XC    LCTJCTAD(D4),LCTJCTAD    ZERO OUT JCT ADDRESS          I272 03825019
         LR    R1,R10           GET LIFE OF TASK BLOCK ADDR                     0389
         L     15,16            MOTHER CVT                                      0390
         L     15,0(0,15)       DOUBLEWORD                                      0391
         L     15,4(0,15)       THE TCB                                         0392
         L     15,12(0,15)      OUR TIOT                                        0393
         CLI   0(15),C'F'       FIXED PARTITION?                                0394
```

```
         BNE   LACTATE        NO                                          0395
         L     R15,IEFSD62V        GET ADDRESS OF IEFSD062.
         LA    R15,DISPLACE(R15)   BUMP IT TO FTT FLAG.
         MVI   0(R15),X'FF'        SET FTT FLAG ON.
HITIT    L     R1,ECBLIST          LOAD ECB LIST PTR.
         WAIT  1,ECBLIST=(1) WAIT FOR WORK                               0397
         B     FIRST+2        SKIP MICKEY MOUSE                          0398
LACTATE  EQU   *                                                        0399
         XCTL  EP=IEFSD105,MF=(E,(1)) XCTL TO LINK PACK AREA TO WAIT    03890014
*                                     FOR WORK OR STOP INIT - THUS      03920014
*                                     MAKING AVAILABLE THE SPACE  THE   03950014
*                                     IEFSD061 LOAD IS OCCUPYING        03980014
*********************************************************************** 04010014
SD061037 EQU   *                                                        04040015
         L     R3,LCTSREG                                               04070015
         TM    LCTOPSW1,LCTICMDF   PROCESSING INITIATOR COMMANDS  M3161 04100019
         BO    NOTTHRES            NO, DONT REDUCE THRESHOLD      M3161 04130019
         L     R7,16                     ADDRESS OF CVT                 04160000
         USING CVTDSECT,R7                                              04180000
         L     R7,CVTJOB                 GET ADDRESS OF RESID CORE      04200000
         USING QMRDSECT,R7                                              04220000
*                                                                       04240000
         ENQ   MF=(E,IEFSD61B)           ENQUEUE ON ASSIGN/DELETE       04260000
         LH    R0,QMTBT                  GET SIZE OF THRESHOLD          04280000
         TM    QMQBK,QMRSV         TEST IF HAVE RESERVE                 04300000
         BZ    SD061038            NO-THIS INIT'S THRSHLD WILL BE RESV  04320000
         SH    R0,QMTRS                  SUB SIZE GARENTEED AN INIT     04340000
         STH   R0,QMTBT                  SAVE NEW SIZE                  04360000
SD061038 OI    QMQBK,QMRSV         SET RESERVE BIT ON                   04380000
         DEQ   MF=(E,IEFSD61B)           DEQUEUE ON ASSIGN/DELETE       04400000
NOTTHRES EQU   *                                                  M3161 04460019
         LA    R7,SD612073                                              04522015
SD612270 EQU   *                                                        04524015
SD612070 EQU   *                                                        04528015
         L     R6,ECBLIST          ADDRESS OF ECBLIST             I272 04528319
         LR    R8,R6               SAVE ECBLIST ADDRESS           I272 04528619
         LTR   R8,R8               IS THERE AN ECBLIST            I272 04528919
         BCR   D8,R7               NO, DONT UNCHAIN IT            I272 04529219
NEXTECB  EQU   *                                                 I272 04529519
         LA    R8,4(R8)            LOAD ADDR OF POINTER TO ECB          04530015
         L     R1,0(R8)            LOAD ECB POINTER                     04532015
         LA    R1,0(R1)            CLEAR HIGH ORDER BYTE                04533015
         TM    0(R1),POSTBIT       TEST FOR POSTED                      04534015
         BZ    SD612072            NO, BRANCH AND UNCHAIN               04536015
SD612071 EQU   *                                                        04538015
         TM    0(R8),ENDBIT        TEST FOR END OF LIST                 04540015
         BZ    NEXTECB             NO, GO TEST NEXT ECB           I272 04542019
         BR    R7                  YES RETURN                           04544015
SD612072 EQU   *                                                        04546015
         L     R15,QMNCVCON        GET ADDRESS OF UNCHAIN ROUTINE       04548015
         BALR  R14,R15             GO TO UNCHAIN                        04550015
         MVI   0(R1),X'40'         POST UNCHAINED ECB                   04551016
         B     SD612071            GO CHECK FOR END OF LIST             04552015
SD612073 EQU   *                                                        04552515
         LTR   R6,R6               IS THERE AN ECBLIST            I272 04553519
         BZ    TESTKEY             NO, DONT FREE IT               I272 04554519
         LR    R1,R6               LOAD POINTER TO ECB LIST             04556015
```

```
         LA      R0,4                LOAD CONSTANT OF 4                     04558015
         SR      R1,R0               SUBTRACT TO GET TO LENGTH OF ECBLIST 04560015
         L       R0,0(R1)            LOAD LENGTH                            04562015
         LA      R8,TCORE                                                   04564015
         SLL     R8,24                                                      04566015
         OR      R0,R8                                                      04568015
         FREEMAIN  R,LV=(0),A=(1)                                           04570015
TESTKEY  EQU     *                                                   I272 04572019
         TM      LCTOPSW1,LCTPKEYE   WAS PROTECT KEY GOTTEN          I272 04574019
         BO      NOTFREE             NO, SO DONT FREE IT             I272 04576019
         L       R6,16              LOAD ADDR OF CVT INTO BASE REG 6       04580000
         USING CVTDSECT,R6                                                  04600000
         L       R6,CVTTCBP         LOAD ADDR OF TCB INTO BASE REG 6       04620000
         L       R6,4(R6)                                                   04640000
         XR      R1,R1              CLEAR REG 1                            04660000
         IC      R1,28(6)           INSERT PROTECT KEY INTO BASE REG 1     04680000
         SRL     R1,4(0)            MOVE KEY TO LOW ORDER BITS OF REG      04700000
         LA      R2,1(0)            LOAD 1 INTO REG 2                      04720000
         SLL     R2,0(1)            SHIFT LEFT KEY NUMBER OF BITS          04740000
         L       R6,16              LOAD ADDR OF CVT INTO BASE REG 6       04760000
         USING CVTDSECT,R6                                                  04780000
         L       R6,CVTMSER         LOAD ADDR OF MASTER INTO REG 6         04783019
         USING BASE,R6                                                      04786019
         EX      R2,EXXI            TURN OFF KEY SWITCH                    04789019
         SRL     R2,8(0)            SHIFT TO HI EIGHT BITS                 04792019
         EX      R2,EXXIA           TURN OFF KEY SWITCH                    04795019
NOTFREE  EQU     *                                                   I272 04798019
         L       R9,LCTEXIT          SAVE ADDRESS OF EXIT LIST       I272 04801019
*********************************************************************** 04804019
         LR      R1,R10              ADDRESS OF LIFE OF TASK BLOCK          04807019
         LA      R0,IEFEND-IEFLOT    LENGTH OF LOT                          04810019
         LA      R14,TCORE           SUBPOOL NUMBER                         04813019
         SLL     R14,24              PLACE IN HIGH ORDER BYTE OF            04816019
         OR      R0,R14              LENGTH REGISTER                        04819019
         FREEMAIN  R,LV=(0),A=(1)    FREE LOT                               04822019
         LR      R1,R11                                                     04825019
*********************************************************************** 04828019
         USING IELEXITS,R9           EXIT LIST ADDRESSABILITY        I272 04831019
         LA      R9,ZERO(R9)         ZERO HIGH ORDER BYTE            I272 04834019
         LTR     R9,R9               IS THERE AN EXIT LIST           I272 04837019
         BZ      RETURN              NO, EXIT TO MASTER SCHED        I272 04840019
         LR      R1,R9               EXIT LIST ADDRESS               I272 04843019
         CLI     RTNEXLK,IELEXADD    IS THIS A BRANCH EXIT           I272 04846019
         BE      BRANCH              YES, PREPARE TO BRANCH          I272 04849019
         LA      R0,D16              REMOTE LIST + SUP PARMLIST     M4339 04852019
         GETMAIN R,LV=(0)           GET CORE FOR REMOTE LIST        M4339 04855019
         XC      ZERO(D16,R1),ZERO(R1)    CLEAR CORE                M4339 04858019
         LR      R15,R1              ADDR OF SUP PARMLIST           M4339 04861019
         LA      R2,D8(R1)           ADDR OF REMOTE LIST            M4339 04864019
         LR      R1,R9              EXIT LIST ADDRESS               M4339 04867019
         MVC     ZERO(D6,R2),RTNEXNM MOVE EXIT NAME                 M4339 04870019
         MVI     D6(R2),BLANK       PAD WITH BLANKS                 M4339 04873019
         MVI     D7(R2),BLANK       PAD WITH BLANKS                 M4339 04876019
         ST      R2,ZERO(R15)        REMOTE LIST ADDR               M4339 04879019
         LR      R2,R15              ADDR OF SUP PARMLIST           M4339 04882019
         CLI     RTNEXLK,IELEXXTL    IS EXIT BY XCTL                 I272 04889619
         BE      GOXCTL              YES, PREPARE TO XCTL            I272 04889719
```

```
*   IF EXIT IS NOT BY BR OR XCTL, LINK IS ASSUMED                 *   I272 04889819
         LINK   MF=(E,(1)),SF=(E,(15))  GO TO EXIT ROUTINE         M4339 04890619
         B      RETURN                  GO RETURN                  M4339 04891419
GOXCTL   EQU    *                                                  M4339 04892219
         XCTL   ,MF=(E,(1)),SF=(E,(15))  GO TO EXIT ROUTINE        M4339 04893019
BRANCH   EQU    *                                                  M4339 04893819
         L      R15,RTNEXAD             ADDRESS OF EXIT ROUTINE    M4339 04894619
         BR     R15                     BRANCH TO EXIT ROUTINE     M4339 04895419
RETURN   EQU    *                       RETURN TO ATTACHER         M4339 04896219
         LR     R14,R3                  INITIALIZE RETURN REGISTER M4339 04897019
         BR     R14                                                       04898015
MOVEMESS MVC    0(0,R3),31(R2)                                            04903015
ENDBIT   EQU    X'80'                                                     04908015
*************************************************************************** 04916014
EXXI     XI     BARSW+5,0             TURN OFF PROTECT KEY                04917019
EXXIA    XI     BARSW+4,0                                                 04918019
SD061040 EQU    *                                                         04919019
         USING  IEFCSCB,R1            CSCB ADDRESSABLITY          I272 04920019
         OI     CHSTS,CHDL            INDICATE FREE WHEN JOB TERM I272 04921019
         DROP   R1                                                  I272 04922019
         ST     R1,LCTQDRTY           ADDRESS OF JOB CSCB         I241 04923019
         USING  IOPARAMS,R9           QMGR PARAM AREA ADDRESSABILITY I272 04924019
JCTIN    EQU    *                                                  I272 04925019
         LA     R0,WTPCBSIZ           SIZE OF WTPCB              M4339 04926019
         O      R0,M253               SUBPOOL IN HIGH ORDER BYTE  I254 04927019
         GETMAIN    R,LV=(0)          GET CORE FOR WTPCB          I254 04928019
         LR     R6,R1                 SAVE ADDRESS                I254 04929019
         XC     ZERO(WTPCBSIZ,R1),ZERO(R1)    ZERO WTPCB         M4339 04930019
         GETJSCB    SYSTEM=MVT        GET MVT JSCB                I254 04931019
         USING  IEZJSCB,R1            JSCB ADDRESSABILITY         I254 04932019
         ST     R1,LCTJSCB            ADDRESS OF JSCB TO LCT      I254 04933019
         ST     R6,JSCBWTP            ADDRESS OF WTPCB TO JSCB    I254 04934019
         MVC    JSCBCSCB+ONE(D3),LCTQDRTY+ONE ADDR CSCB           I254 04935019
         TM     LCTOPSW2,LCTTIMEF     IS TIMING WANTED            I272 04936019
         BNO    YESTIME               YES, CONTINUE               I272 04937019
         MVC    JCTJMRTL,HOUR24            NO, INSERT MAX TO      I272 04938019
*                                           INDICATE NO TIMING     I272 04939019
YESTIME  EQU    *                                                  I272 04940019
         SR     R0,R0                 CLEAR REGISTER              I272 04943019
         STC    R0,FRCPRTY            CLEAR FORCE SLOT IN LCT     I272 04946019
         L      R1,ECBLIST            ADDRESS OF ECBLIST          I272 04949019
         LTR    R1,R1                 IS THERE AN ECBLIST         I272 04952019
         BZ     NOFORCE               NO, DONT INSERT FORCE IN LCT I272 04955019
         LA     R1,4(R1)              LOAD ADDRESS OF FIRST JOB ECB I241 04963018
         SR     R8,R1                 DETERMINE OFFSET INTO       I241 04964018
         SRL    R8,2                     FORCE TABLE              I241 04965018
         LA     R1,LCTFORCE           LOAD ADDRESS OF FORCE TABLE I241 04968018
         IC     R0,0(R8,R1)           LOAD FORCE VALUE            I241 04969018
         LTR    R0,R0                 WAS FORCE SPECIFIED         I241 04970018
         BZ     SD061044              NO, BRANCH AND CONTINUE     I241 04971018
         STC    R0,FRCPRTY            YES, STORE FORCE PRTY IN SLOT I241 04972018
SD061044 EQU    *                                                  I241 04973018
         L      R8,ECBLIST            LOAD POINTER TO ECBLIST           04980516
         BAL    R7,SD612070           GO UNCHAIN ECBS                   04981016
NOFORCE  EQU    *                                                  I272 04981219
         L      R1,LCTQDRTY           RESTORE REGISTER ONE              04981516
*************************************************************************** 04982014
```

```
         MVN   JCTJPRTY(1),QMPRI    REPLACE THE JOB'S ORIGINAL       CR17 04984017
*                                   PRIORITY IN THE JCT WITH ITS PRESENT 04986014
*                                   PRIORITY FROM THE QMPA. IN CASE ITS  04988014
*                                   PRIORITY WAS CHANGED WHILE IN THE    04990014
*                                   INPUT QUEUE                          04992014
*********************************************************************** 04994014
         OI    QMPRI,X'20'              INDICATE INITIATOR QMPA     994  05000000
         L     R6,16                    LOAD ADDR OF CVT INTO BASE R6    05020000
         USING CVTDSECT,R6                                               05040000
         L     R6,CVTTCBP                                                05060000
         L     R6,4(R6)                 LOAD ADDR OF TCB INTO BASE R6    05080000
         L     R5,12(R6)                LOAD ADDR OF TIOT INTO R5        05100000
         DROP  R6                                                        05120000
         TM    LCTOPSW1,LCTICMDF    PROCESS INIT COMMANDS          M4339 05126019
         BO    NOMVJBNM             NO, DONT UPDATE T&OT           M4339 05132019
         MVC   8(8,R5),QMNAM            MOVE JOBNAME INTO TIOT SSS FIELD 05140000
NOMVJBNM EQU   *                                                   M4339 05150019
         TM    QMSTA,CANCELED      WAS JOB CANCELLED IN-QUEUE             05160000
         BC    8,SD061042          NO, CONTINUE                           05180000
         USING IELEXITS,R2          EXIT LIST ADDRESSABILITY        I272 05182019
         L     R2,LCTEXIT           ADDRESS OF EXIT LIST            I272 05184019
         LA    R2,ZERO(R2)          CLEAR HIGH-ORDER BYTE           I272 05186019
         LTR   R2,R2                IS THERE AN EXIT LIST           I272 05188019
         BZ    NOEXITL              NO, NO RETURN CODE              I272 05190019
         MVI   IELRTNCD,IOERR       YES, INSERT I/O RETURN CODE     I272 05192019
NOEXITL  EQU   *                                                   I272 05194019
         OI    JCTJSTAT,INCMSTS    YES, SET JOB-FAIL BIT IN JCT           05200000
         OI    LCTQENTY,LCTERRM     TURN ON TERM BIT                      05202014
         XC    JCTDETDA(3),JCTDETDA      ZERO OUT TTR OF DSENQ TABLE      05205014
*                                        SO DATA SETS WILL NOT BE         05210014
*                                        ENQUEUED UPON                    05215014
SD061042 EQU   *                                                         05220000
*********************************************************************** 05240000
*                                          INSERT PROTECT KEY FROM   * 05260000
*                                          INITIATOR TCB AND PLACE   * 05280000
*                                          IN JCT FOR UNIQUE JOB     * 05300000
*                                          SERIAL  NO.               * 05320000
*********************************************************************** 05340000
         USING IEFCSCB,R1                                                05380000
*                                                                        05400000
*                                          SAVE 0 AND POINTER TO JOB     05420000
*                                          NAME IN THE STACK AND         05440000
*                                          QUEUE BREAK AREA. JOB NAME    05460000
*                                          NEEDED FOR MESSAGE AND        05480000
*                                          CANCEL JOB COMMAND, 0 IS      05500000
*                                          TO INDICATE TRACKS OF         05520000
*                                          QUEUE USED BY INITIATOR       05540000
*                                                                        05560000
         LA    R2,CHKEY                   GET POINTER TO JOB NAME       05580000
         ST    R2,TRSTKINF+4              PUT IN 0 AND JOB NAME PTR     05600000
         MVC   TRSTKINF+4(1),JCTNTRK   MOVE TRACKS USED                  05603018
         MVC   CHJCL(4),JCTDSKAD       PLACE JCT TTR IN CSCB OF JO CR17 05606017
         MVI   CHJCL+3,X'00'           BE SURE LAST BYTE IS ZERO   CR17 05612017
         L     R1,CHSWT                   R1 = TCB ADDR                 05620000
TCBPKF    EQU  28                                                       05640000
         DROP  R1                                                   M2942 05641019
         L     R2,LCTQDRTY          ADDRESS OF CSCB                 M2942 05642019
```

```
         USING IEFCSCB,R2          CSCB ADDRESSABILITY              M2942 05643019
         TM    CHSWT,CHSYS         IS THIS FOR A SYSTEM TASK        M2942 05644019
         BNO   NOTZEROK            NO, PUT IN PROTECT KEY           M2942 05645019
         DROP  R2                                                   M2942 05646019
* 119450                                                            M4008 05647019
         MVI   JCTJSRNO,FOXFOX     YES, INSERT NONZERO NUMBER        I272 05649019
         B     ZEROKEY             SKIP MOVE FROM TCB                I272 05652019
NOTZEROK EQU   *                                                    I272 05655019
         MVC   JCTJSRNO(1),TCBPKF(R1)        MOVE PROTECT KEY TO JCT      05660000
ZEROKEY  EQU   *                                                    I272 05670019
         DROP  R1                                                         05680000
         GETMAIN  R,LV=176,SP=TCORE     GET CORE FOR SCT                  05700000
         ST    R1,REMLST                ADDRESS OF GOTTEN CORE            05720000
         ST    R1,LCTSCTAD              SCT ADDRESS TO LCT                05740000
         MVC   REMLST+4(4),JCTSSTR      ALTERNATE SCT TTR IN REMOT CR17 05770017
         SR    R2,R2                    ZERO A REGISTER TO                05800000
         ST    R2,QMCAN                 ZERO OUT ECB SLOT                 05820000
         MVI   QMPCL,1                  INDICATE ONE OPERATION            05840000
         MVI   QMPOP,4                  INDICATE READ OPERATION           05860000
         LR    R1,R9                    ADDRESS OF Q MGR PAR AREA         05880000
         L     R15,IEFQMRD              ADDRESS OF READ MODULE            05900000
         BALR  R14,R15                  GO TO THE READ MODULE             05920000
         LTR   R15,R15    ANY NON-ZERO COND CODE                    099 05980019
         BNZ   BADIO      YES - GO TO ABEND ROUTINE                 099 06040019
****************************                                                06120000
*************************************************************************** 06140000
*                                                                         * 06160000
*  AT THIS POINT, CHANGE THE INITIATOR'S PRIORITY TO REFLECT THE          * 06180000
*  PRIORITY OF THE JOB GOTTEN FROM THE QUEUE                              * 06200000
*                                                                         * 06220000
*************************************************************************** 06240000
SD061060 EQU   *                                                          06260000
         L     R1,LCTSCTAD          LOAD ADDRESS OF SCT              CR17 06265017
         USING IEFSCT,R1                                             CR17 06270017
         OI    SCTSDP,SCTFSTEP      TURN ON FIRST STEP BIT           CR17 06275017
         SR    R1,R1                    ZERO OUT R1                       06280000
         IC    R1,QMPRI                 MSGLEVEL AND PRIORITY TO R1       06300000
         LA    R0,X'0F'                 LOAD A MASK                       06320000
         NR    R1,R0                    'AND' OUT MESSAGE LEVEL           06340000
         STC   R1,LCTQDRTY          PLACE LPMOD VALUE IN LCT         I241 06430018
*************************************************************************** 06520000
*        THE FOLLOWING CODE WILL READ THE SYSOUT CLASS DIRECTORY        * 06540000
*        FROM DISK AND FROM THE FIRST ENTRY IN THIS DIRECTORY,WHICH     * 06560000
*        IS THE MSGCLASS ENTRY,WILL BUILD THE MSGCLASS QMANAGER         * 06580000
*        PARAMETER AREA. THE POINTER TO THIS NEW AREA WILL BE STORED    * 06600000
*        IN THE LCT.(OFFSET 68)-                                        * 06620000
*  DIRECT SYSOUT (DSO) ROUTINES WILL ALSO SCAN THE SCD LATER ON      099 06626019
*  IN THIS PROGRAM.                                                  099 06632019
*************************************************************************** 06640000
         LA    R1,REGSAVE+72            Q MGR EXTERNAL PAR AREA           06660000
         XC    0(8,R1),0(R1)            CLEAR AREA TO ZERO                06680000
         ST    R1,QMPCL                 STORE POINTER TO EXT PARM AREA    06700000
         LR    R3,R1                    SAVE POINTER                      06720000
         GETMAIN R,LV=176                GETMAIN FOR THE SCD               06740000
*                                        DIRECTORY READ IN AREA          * 06760000
         ST    R1,0(0,R3)               STORE POINTER TO READ IN AREA     06780000
*                                        INTO EXT PARAM AREA             * 06800000
```

```
         MVC    4(3,R3),JCTDSSBA          MOVE SCD DISK ADDR INTO FXT       06820000
*                                         PARAM AREA                      * 06840000
         MVI    QMPOP,X'04'               INDICATE READ TO QMANAGER         06860000
         MVI    QMPCL,X'01'               INDICATE ONE RECORD TO BE READ    06880000
         LR     R4,R1                     SAVE POINTER TO READ.IN AREA      06900000
         LA     R13,REGSAVE                POINTER TO SAVE AREA             06920000
         LR     R1,R9                     LOAD POINTER TO QMPA              06940000
         L      R15,IEFQMRD                                                 06960000
         BALR   R14,R15                   BRANCH TO QMANAGER                06980000
         LTR    R15,R15    ANY NON-ZERO COND CODE                     099 06986019
         BNZ    BADIO      YES - GO TO ABEND ROUTINE                  099 06992019
*********************************************************************** 07000000
*        THE FOLLOWING CODE WILL GET CORE FOR AND BUILD THE MSGCLASS  * 07020000
*        QMGR PARAM AREA AND ITS ASSOCIATED IOB                       * 07040000
*********************************************************************** 07060000
         L      R1,LCTSOQMP                ADDRESS OF SYSOUT QUEUE          07080000
*                                          MANAGER PARAMETER AREA           07100000
         XC     0(36,R1),0(R1)            CLEAR GOTTEN AREA                 07120000
         MVC    QMWTQ2(4),QMWTQ1     MOVE TRK STACK INFO ADDR FROM          07140000
*                                          MAIN QMPA TO ALTERNATE ONE       07160000
         MVC    9(3,R1),1(R4)             MOVE THE QMFLT AND QMTST FIELDS   07180000
*                                         FROM THE MSGCLASS SYSOUT CLASS * 07200000
*                                         DIRECTORY INTO THE MSGCLASS    * 07220000
*                                         QMNGR PARAM AREA BEING BUILT   * 07240000
         MVC    14(1,R1),4(R4)            MOVE QMNOT FIELD INTO QMPA        07260000
         MVC    20(2,R1),5(R4)            MOVE QMTID FIELD INTO QMPA        07280000
         OI     17(R1),X'20'              INDICATE INITIATOR QMPA      994  07300000
         LR     R3,R1                     SAVE POINTER TO QMPA              07320000
*********************************************************************** 07340000
*        GET CORE FOR, BUILD AND INITIALIZE THE IOB                   * 07360000
*********************************************************************** 07380000
         LA     R0,QIOBL+4                LENGTH OF ECB/IOB+4               07400000
         LA     R14,TCORE                  GETCORE IN SUBPOOL 253           07420000
         SLL    R14,24                     SHIFT TO HIGH ORDER BYTE         07440000
         OR     R0,R14                     OR INTO LENGTH REGISTER          07460000
         LR     R5,R0                      SAVE SUBPOOL NO. AND LENGTH      07480000
         GETMAIN R,LV=(0)                 GET CORE FOR ECB/IOB              07500000
         ST     R5,0(R1)                  SAVE SUBPOOL AND LENGTH OF        07520000
*                                          ECB/IOB IN PRIOR 4 BYTES         07540000
         LA     R5,4(R1)                  ADDR OF ECB/IOB                   07560000
         ST     R5,28(0,R3)               STORE ADDR IN QMEIA FIELD OF      07580000
*                                         QMGR PARAM AREA                 * 07600000
         MVC    0(QIOBL,R5),QMECB         MOVE BASIC ECB/IOB MAP TO GOTTEN 07620000
*                                         AREA                            * 07640000
         ST     R5,QIOBA(R5)              SET ECB ADDR INTO IOB             07660000
         LA     R1,QIOBC(R5)              STORE ADDR OF CCW1 INTO           07680000
         ST     R1,QIOBB(R5)                      IOB                       07700000
         MVC    QIOBD+1(3,R5),QIOBB+1(R5)     AND INTO CCW2 FIELD           07720000
         LA     R1,QIOBC-5(R5)            ADDR OF IOBSEEK FLD + 3           07740000
         ST     R1,QIOBC(R5)                  INTO THE IOB                  07760000
         OI     QIOBC(R5),QMCOP                                             07780000
         L      R1,CVTPTR                  GET  CVT  PTR                    07800000
         USING CVTDSECT,R1                 ADDRESS THE CVT                   07820000
         L      R1,CVTJOB                  ADDR OF SCHEDULER DCB            07840000
         ST     R1,QIOBDCB(R5)             STORE DCB ADDR IN IOB SLOT       07860000
         DROP   R1                                                          07880000
*                                                                       099 07880519
```

```
* * * * * * * * * DETERMINE IF DIRECT SYSOUT (DSO) IS TO          099 07881019
*                 BE INVOKED FOR THIS JOB.                         099 07881519
*                                                                  099 07882019
         TM    LCTDPSW2,LCTDSOF  IS DSO SURPRESSED BY L-SHAPE     099 07882519
         BO    NODSO             YES - BYPASS DSO TESTS           099 07883019
         L     R1,CVTPTR       LOCATION OF CVT                    099 07883519
         USING CVTDSECT,R1     CVT BASE                           099 07884019
         L     R1,CVTMSER      ADR OF MASTER SCH DATA AREA        099 07884519
         USING BASE,R1         M/S BASE REG                       099 07885019
         L     R1,BADSO  FIRST DSOCB ADR                          099 07885519
         DROP  R1                                                 099 07886019
         LA    R1,NO(,R1)      CLEAR H/O                          099 07886519
         LTR   R1,R1           ANY ADR TO DSOCB CHAIN             099 07887019
         BZ    NODSO           NO-BYPASS ALLOCATION OF DSOCB'S    099 07887519
*                                                                  099 07888019
* * * * * * * * * FOLLOWING CODE IS INCASE THE DSO ROUTINE IS      099 07888519
*                 EVER MADE A SEPERATE MODULE SINCE CODE IS ALSO   099 07889019
*                 SIMILAR FOR IEFSD511 IN MFT.                     099 07889519
*                                                                  099 07890019
         L     R1,QMPCL  GET QMGR EXTERNAL PARM LIST              099 07890519
         ST    R4,NO(,R1)      ADR OF SCD INTO PARM LIST FOR QMGR 099 07891019
         MVC   LCTPARM1(N4),IEFQMRD     ADR OF Q MGR RD/WR        099 07891519
         LA    R13,REGSAVE     REG SAVE AREA                      099 07892019
         LR    R1,R10          ADR OF LOT                         099 07892519
         L     R15,DSOVCON     ADR OF DSO SELECT ROUTINE          099 07893019
         BALR  R14,R15         BRANCH TO DSO SELECT ROUTINE       099 07893519
*                                                                  099 07894019
         LTR   R15,R15   ANY I/O ERRORS                           099 07894519
         BNZ   BADIO     YES - GO TO ABEND                        099 07895019
*                                                                  099 07895519
NODSO    EQU   *                                                  099 07896019
*                                                                  099 07896519
         LR    R1,R4                     LOAD POINTER TO SCD AREA     07900000
         FREEMAIN R,LV=176,A=(1)         FREE SCD CORE                07920000
*********************************************************************** 07940000
*                                                                     * 07960000
* INITIALIZE TIMER WORK AREA FOR THE JOB,JOBLIB DCB PTR,QMOSC FIEL CR17 07970017
* IN QMPA,AND STEP NO. IN LCT.                                     CR17 07980017
*                                                                     * 08000000
*********************************************************************** 08020000
*                                                                      08040000
         XC    LCTTMWRK(16),LCTTMWRK     ZERO TIMER WORK AREA         08060000
         XC    LCTJOBLB,LCTJOBLB         ZERO THE JOBLIB POINTER      08080000
         XC    QMOSC(1),QMOSC            ZERO OUT QMOSC  FIELD IN Q CR17 08086017
         MVC   LCTSNUMB(1),JCTSNUMB      MOVE STEP NO. FROM JCT TO  CR17 08092017
*                                                                      08100000
*********************************************************************** 08120000
*                       DATA SET INTEGRITY CODE                        08140000
*                                                                      08160000
* FUNCTION:1.TO READ THE DATA SET ENQ TABLE PREPARED BY THE INTERPRETER 08180000
*          2.WRITE A NEW TABLE WITHOUT DUPLICATES FOR USE IN IEFSD166  08200000
*          3.TO PREPARE AN ENQ PARAMETER LIST FOR USE IN IEFSD102.     08220000
*                                                                      08240000
*********************************************************************** 08260000
*                                                                      08280000
         USING DSNIN,R4                                               08300000
DIMODULE XC    LCTPARM1,LCTPARM1            CLEAR TO ZERO             08301019
```

```
         USING IEFCSCB,R1          CSCB ADDRESSABILITY                M4351 08302019
         L     R1,LCTQDRTY         ADDRESS OF CSCB                    M4351 08303019
         TM    CHSWT,CHDSI         IS DATA SET INTEGRITY WANTED       M4351 08304019
         BNO   WANTDSI             YES, BRANCH                        M4351 08305019
         XC    JCTDETDA(D3),JCTDETDA    NO, ZERO SO NO DEQ LATER      M4351 08306019
         B     SD061200            BYPASS DATA SET INTEG PROC         M4351 08307019
WANTDSI  EQU   *                                                      M4351 08308019
         TM    JCTJSTAT,INCMSTS    HAS JOB BEEN CANCELLED             M4351 08309019
         BNO   GODSI               NO  -  GO SET UP DSI               M4351 08310019
         XC    JCTDETDA(D3),JCTDETDA    ZERO SO NO DEQ LATER          M4351 08311019
         B     SD061200            BYPASS DATA SET INTEGRITY          M4351 08312019
GODSI    EQU   *                                                      M4351 08313019
         OC    JCTDETDA(3),JCTDETDA          IF TTR PARM EQ ZERO,THERE   08340000
         BZ    SD061200                      ARE NO DSNAMES FOR JOB      08360000
*                                                                        08380000
         XC    QEXPARM(40),QEXPARM           CLEAR WORK AREAS            08400000
         GETMAIN R,LV=368                    DSNAME I/O AREAS            08420000
*                                            AND TREE-BUD AREA           08440000
         LR    R4,R1                         SAVE POINTER TO I/O AREA    08460000
*                                                                        08480000
* INITIALIZE PARAMETER LIST FOR TREE ROUTINES                            08500000
         XC    BUD,BUD                  CLEAR TO ZERO                    08520000
         LA    R3,BUD                                                    08540000
         ST    R3,TREE                       ADDR OF BUD                 08560000
         MVI   TREE,X'02'                    HIGH ORDER BYTE             08580000
         LA    R2,TREE-8                                                 08600000
         ST    R2,TBLPARM                    STORE IN TBUILD PARM LIST   08620000
*                                                                        08640000
         XC    OCTTR(14),OCTTR               CLEAR OUTPUT FIELDS         08660000
         MVI   OTABID,X'0F'                  TABLE ID IN OUTPUT RECORD   08680000
*                                                                        08700000
*     SETUP Q MANAGER PARAMETERS AND READ                                08720000
         LA    R3,QEXPARM                                                08740000
         ST    R3,QMPCL                      STORE ADDR IN EXT PARM AREA 08760000
         MVC   OTTR,JCTDETDA                 STORE TTR FOR 1ST READ      08780000
         LA    R2,OSTART                     ADDR OF 1ST OUTPUT RECORD   08800000
SD061070 ST    R4,QEXPARM                    POINTER TO INPUT AREA       08820000
         MVI   QMPOP,X'04'                   INDICATE READ TO QMGR       08840000
         MVI   QMPCL,X'01'                   INDICATE ONE REC TO BE READ 08860000
         LA    R13,REGSAVE                   POINTER TO SAVE AREA        08880000
         LR    R1,R9                         POINTER TO QMPA             08900000
         L     R15,IEFQMRD                                               08920000
         BALR  R14,R15                       BRANCH TO QMANAGER          08940000
         LTR   R15,R15    ANY NON-ZERO COND CODE                   099 09000019
         BNZ   BADIO      YES - GO TO ABEND ROUTINE                099 09060019
OKRET    EQU   *                                                       09120000
         OC    TTRBUF1,TTRBUF1               TEST FOR ZERO TTR           09140000
         BZ    SD061080                                                  09160000
         MVC   TTRBUF2,ICTTR                 MOVE CURRENT TTR TO BUFFER2 09180000
         B     SD061090                                                  09200000
SD061080 MVC   TTRBUF1,ICTTR                 MOVE CURRENT TTR TO BUFFER1 09220000
SD061090 LA    R5,14(R4)                     ADDR OF 1ST CHAR OF 1ST     09240000
*                                            RECORD IN BLOCK             09260000
SD061100 LA    R6,1(R5)                                                  09280000
         MVC   LENGTH+1(1),1(R5)             STORE LGTH OF CURNT DSNAME  09300000
         AH    R6,LENGTH                     R6-ADDR OF LAST CHAR OF DSN 09320000
         CLI   1(R5),X'00'                   ZERO LENGTH INDICATES END   09340000
```

```
         BE     SD061150                    OFBLOCK                     09360000
         LA     R5,2(R5)                    R5 NOW POINTS TO 1ST CHAR   09380000
*                                           OF DSNAME                   09400000
         LA     R1,TBLPARM                  ADDR OF TBUILD PARM LIST    09420000
         STM    R5,R6,DSNBEG                STORE TBUILD PARAMETERS     09440000
         LA     R13,REGSAVE                                             09460000
         L      R15,TBLVCON                                             09480000
         BALR   R14,R15                     BRANCH TOIEFDSTBL           09500000
*********************************************************************** 09520000
*                                                                       09540000
*                UPON RETURN FROM IEFDSTBL,R1 CONTAINS ADDR-8 OF A      09560000
*                4 BYTE AREA CONTAINING THE ADDR OF A 4 BYTE AREA       09580000
*                WHICH CONTAINS:                                        09600000
*                         BYTE 0-X'80' IF SHARED SRR                    09620000
*                                X'00' IF EXCLUSIVE SRR                 09640000
*                         BYTE 1+2-NOT USED                             09660000
*                         BYTE 3-CONTAINS ZERO IF DSNAME INTRODUCED TO  09680000
*                                IEFDSTBL WAS NEW                       09700000
*********************************************************************** 09720000
         BCTR   R5,R0                                                   09740000
         BCTR   R5,R0                    DECREMENT R5 BY 2              09760000
         L      R1,8(R1)                    LOAD ADDR OF 4BYTE BUD      09780000
         OC     3(1,R1),3(R1)               TEST FOR NEW DSNAME         09800000
         BZ     SD061110                    BRANCH IF TRUE              09820000
         NC     0(1,R1),0(R5)               UPDATE E/S ATTRIBUTE        09840000
         B      SD061130                                                09860000
SD061110 MVC    0(1,R1),0(R5)               STORE 1ST E/S ATTRIBUTE     09880000
         MVI    3(R1),X'01'                 CHANGE DSNAME STATUS TO OLD 09900000
SD061120 LH     R3,LENGTH                  *R3 WILL CONTAIN SPACE       09920000
         LA     R3,2(R3)                    NEEDED IN OUTPUT BLOCK      09940000
         LA     R7,OEND                    *R7 WILL CONTAIN REMAINING   09960000
         SR     R7,R2                       SPACE                       09980000
         CLR    R3,R7                                                   10000000
         BH     SD061170                    BRANCH IF NO SPACE          10020000
         BCTR   R3,R0                       SUB 1 FROM LENGTH(EXECUTE   10040000
*                                           INSTRUCTION REQUIRES ONE    10060000
*                                           LESS THAN ACTUAL LENGTH     10080000
         EX     R3,SD061140                 MOVE DSNAME TO OUTPUT AREA  10100000
         LA     R2,1(R2,R3)                 INDEX R2 TO NEXT OUTPUT REC 10120000
         LH     R3,LENGTH                   INCREASE DSNAME CHAR COUNT  10140000
         A      R3,OCHAR                    BY LENGTH OF LAST DSNAME    10160000
         ST     R3,OCHAR                                                10180000
         LH     R3,OCNT                     INCREASE DSNAME COUNT BY 1  10200000
         LA     R3,1(R3)                                                10220000
         STH    R3,OCNT                                                 10240000
SD061130 LA     R7,172(R4)                  TEST FOR ANOTHER POSSIBLE   10260000
         CLR    R6,R7                       RECORD IN BLOCK             10280000
         BH     SD061150                    BRANCH IF NO POSSIBILITY    10300000
         LA     R5,1(R6)                    R5-ADDR OF NEXT RECORD      10320000
         B      SD061100                                                10340000
SD061140 MVC    0(0,R2),0(R5)               OBJECT OF EX INSTRUCTION    10360000
SD061150 OC     ILTTR,ILTTR                 END OF DSNAME END TABLE IF  10380000
         BZ     SD061160                    LAST TTR FIELD IS ZERO      10400000
         MVC    QTTR,ILTTR                  MOVE NEXT TTR TO EXT PARM   10420000
*                                           AREA                        10440000
         B      SD061070                                                10460000
SD061160 MVI    TESTEOD,X'FF'               SET END OF DATA INDICATOR   10480000
```

```
SD061170 LA     R7,OEND-2                       CHECK FOR INSERTION OF TWO  10500000
         CLR    R2,R7                           ZEROS AT END OF BLOCK       10520000
         BH     SD061180                                                    10540000
         XC     0(2,R2),0(R2)                   INSERT ZEROS                10560000
SD061180 LA     R3,OCTTR                        ADDR OF OUTPUT AREA         10580000
         ST     R3,OEXPARM                      STORE ADDR IN EXT PARM AREA 10600000
         MVC    OTTR,TTRBUF1                    STORE TTR  IN EXT PARM AREA 10620000
         MVC    OCTTR,OTTR                      CURRENT TTR FIELD IN OUTPUT 10640000
         MVI    OMPOP,X'03'                     INDICATE WRITE TO OMGR      10660000
         MVI    OMPCL,X'01'                     INDICATE ONE REC TO BE READ 10680000
         LA     R13,REGSAVE                     POINTER TO SAVE AREA        10700000
         LR     R1,R9                           POINTER TO OMPA             10720000
         L      R15,IEFQMRD                                                 10740000
         BALR   R14,R15                         BRANCH TO OMANAGER          10760000
         LTR    R15,R15    ANY NON-ZERO COND CODE                       099 10770019
         BZ     OKRET1     NO - CONT PROCESSING                         099 10780019
*                                                                        099 10790019
BADIO    EQU    *          OMGR I/O ERRORS ENTER HERE                   099 10800019
*                                                                        099 10810019
************************* I/O ERROR                                        10860000
         LA     R1,X'0B0'                                                   10880000
         SLA    R1,12                                                       10900000
         ABEND  (1),DUMP                                                    10920000
OKRET1   EQU    *                                                           10940000
         MVC    OLTTR,OCTTR                     SETUP OLTTR FOR NEXT WRITE  10960000
         MVC    TTRBUF1,TTRBUF2                 PUT NEXT TTR IN BUFFER 1    10980000
         XC     TTRBUF2,TTRBUF2                 CLEAR  TTR BUFFER 2         11000000
         CLI    TESTEOD,X'FF'                   TEST FOR END OF DATA        11020000
         BE     SD061190                                                    11040000
         LA     R2,OSTART                       ADDR OF 1ST OUTPUT RECORD   11060000
         B      SD061120                                                    11080000
*                                                                           11100000
* PREPARE FOR ENTRY TO IEFDSLST                                             11120000
TBLVCON  DC     V(IEFDSTBL)                     TBUILD                      11140000
LSTVCON  DC     V(IEFDSLST)                     TSTRIP                      11160000
MAJNAME  DC     C'SYSDSN  '                     ENQ MAJ RESOURCE NAME       11180000
*                                                                           11200000
SD061190 MVC    CHARSAV(6),OCHAR                S AVE DSNAME COUNTS         11220000
         MVC    JCTDETDA(3),OTTR                STORE TTR FOR USE IN        11240000
*                                               IEFSD166 DEQ FUNCTION       11260000
         LR     R1,R4                           FREE I/O AREAS              11280000
         FREEMAIN R,LV=352,A=(1)                                             11300000
*                                                                           11320000
* SETUP PARAMETERS FOR IEFDSLST AND GET CORE FOR ENQ PARM LIST              11340000
*                                                                           11360000
         LA     R3,12(0,0)                      DETERMINE CORE NEEDED FOR   11380000
         MH     R3,CNTSAV                       ENQ PARM LIST               11400000
         A      R3,CHARSAV                      *                           11420000
         LA     R3,8(R3)                        *                           11440000
         LR     R0,R3                           LENGTH OF ENQ PARM LIST     11460000
         LA     R2,255(0,0)                     SUBPOOL NO. 255             11480000
         SLL    R2,24                           PLACE IN HIGH ORDER BYTE    11500000
         OR     R0,R2                           OF LENGTH REGISTER          11520000
         ST     R0,LCTPARM2                     SAVE FOR USE IN IEFSD102    11540000
         GETMAIN R,LV=(0)                       ENQ PARM LIST               11560000
         ST     R1,DSNBEG                       POINTER TO ENQ PARM LIST    11580000
*                                               AREA FOR IEFDSLST           11600000
```

```
         MVC    0(8,1),MAJNAME                1ST 8BYTES ARE ENQ MAJ NAME 11620000
         S      R3,CHARSAV                                                11640000
         AR     R3,R1                                                     11660000
         ST     R3,DSNEND                     ADDR OF 1ST DSNAME ENTRY    11680000
         ST     R1,LCTPARM1                   POINTER TO ENQ PARM LIST    11700000
*                                             FOR USE IN IEFSD102         11720000
         LA     R1,TBLPARM                    ADDR OF IEFDSLST PARM LIST  11740000
         LA     R13,REGSAVE                   POINTER TO SAVE AREA        11760000
         L      R15,LSTVCON                                               11780000
         BALR   R14,R15                       BRANCH TO IEFDSLST          11800000
*********************************************************************** 11820000
*                                                                        11840000
* UPON RETURN FROM IEFDSLST ROUTINE,THE ENQ PARAMETER LIST HAS BEEN      11860000
* BUILT FOR USE IN IEFSD102. A POINTER TO IT IS STORED IN                11880000
* LCTPARM1 AND ITS LENGTH AND SUBPOOL ARE STORED IN LCTPARM2.            11900000
* IEFDSLST BUILDS THE ENQUEUE PARAMETER LIST TO ISSUE AN          A21364 11903019
* UNCONDITIONAL ENQUEUE. CODE CHANGES MADE TO IEFSD102 FOR APAR   A21364 11906019
* 21364 REQUIRE THAT A CONDITIONAL ENQUEUE BE ISSUED. THE         A21364 11909019
* FOLLOWING CODE CHANGES THE ENQUEUE PARMS TO ISSUE A             A21364 11912019
* CONDITIONAL ENQUEUE.                                            A21364 11915019
*                                                                        11920000
********************************************************************** 11940000
         L      R1,LCTPARM1                ADDRESS Q PARM LIST      A21364 11941019
         LA     R1,D8(R1)                  ADDRESS 1ST ENTRY        A21364 11942019
         USING  QL1ST,R1                   ENQ LIST BASE            A21364 11943019
SD061193 EQU    *                         SETUP FOR COND ENQ       A21364 11944019
         OI     QATT,SYSTEM+USE            ENQ SYSTEM, RET = USE     M4008 11945019
         CLI    QLSTEND,LSTEND             END OF LIST?             A21364 11946019
         BE     SD061196                   YES - BRANCH             A21364 11947019
         LA     R1,QENTLGTH(R1)            INCREMENT TO NEXT ENTRY  A21364 11948019
         B      SD061193                   PROCESS NEXT ENTRY       A21364 11949019
SD061196 EQU    *                         CONTINUE PROCESSING      A21364 11950019
         LA     R1,TREE                       FREE TREE                   11960000
         FREEMAIN R,LV=8,A=(1)                                             11980000
*                                                                         12000000
SD061200 LR     R1,R10                        LCT ADDRESS                 12020000
         L      R15,IEFSD62V               ADDRESS OF IEFSD062            12040000
         BR     R15                        GO TO IEFSD062                 12060000
IEFSD60V DC     V(IEFSD060)                                               12070015
IEFSD62V DC     V(IEFSD062)                                               12080000
IEFQMRD  DC     V(IEFQMRAW)                                               12100000
IEFQMVCN DC     V(IEFQMDQ2)                                               12120000
DSOVCON  DC     V(IEFDSDSL)     DSO SELECT DSOCB ROUTINE            D99   12130019
********************************************************************** 12140000
QIOBA    EQU    8                                                         12160000
QIOBB    EQU    20                                                        12180000
QIOBDCB  EQU    24                         DCB ADDR OFFSET FROM ECB/IOB   12200000
QIOBC    EQU    44                                                        12220000
QIOBD    EQU    52                                                        12240000
QMCOP    EQU    X'31'                                                     12260000
DISPLACE EQU    760
ZERO     EQU    0                     DISPLACEMENT                  I272 12260619
ONE      EQU    1                     DISPLACEMENT                  I272 12261219
D3       EQU    3                     DISPLACEMENT                  I254 12261819
D4       EQU    4                     DISPLACEMENT                  I272 12262419
D6       EQU    6                     DISPLACEMENT                  I272 12263019
D7       EQU    7                     DISPLACEMENT                  I272 12263619
```

```
D8        EQU   8                    DISPLACEMENT                      I272 12264219
D0        EQU   0                                                     A27668 12264319
D1        EQU   1                                                     A27668 12264419
D16       EQU   16                   DISPLACEMENT                      M4339 12264519
WTPLEN    EQU   16                   WTPCB LENGTH                       I254 12264819
BLANK     EQU   X'40'                USED TO PAD WITH BLANKS            I272 12265419
FOXFOX    EQU   X'FF'                INSERT UNIQUE NONZERO ID           I272 12266019
IOERR     EQU   4                    I/O ERROR RETURN CODE              I272 12266619
          DS    0F                                                      I254 12267219
M253      DC    X'FD000000'          MASK FOR SP253                     I254 12267819
HOUR24    DC    AL3(8640000)                                            I272 12268419
          EJECT                                                               12270017
          XDAP  QMECB,RI,QMECB,,,,,MF=L     ECB/IOB BASIC PATTERN             12280000
QMPTE     EQU   *                         END OF PATTERN IOB                  12300000
QIOBL     EQU   QMPTE-QMECB               LENGTH OF PATTERN IOB               12320000
QMNCVCON  DC    V(IEFQMUNC)                                                   12340000
POSTBIT   EQU   X'40'                                                         12360000
TCORE     EQU   253                                                           12380000
          EJECT                                                               12390017
*********************************************************************** 12390919
*          ENQ/DEQ MACRO PARAMETER LIST                                 * 12391819
*********************************************************************** 12392719
IEFSD61A  ENQ   (IEFSQCBS,IEFQ6QCB,E,2,SYSTEM),MF=L    ENQ/DEQ PARM LIST 12393619
IEFSQCBS  DC    C'SYSIEFSD'                MAJOR NAME                       12394519
IEFQ6QCB  DC    C'Q6'                      MINOR NAME STOP INIT.            12395419
IEFSD61B  ENQ   (IEFSQCBS,IEFQ2QCB,E,2,SYSTEM),MF=L  ENQ/DEQ PARM LIST      12396319
IEFQ2QCB  DC    C'Q2'                          MINOR NAME ASGN-DEL Q MNGR 12397219
IEFSD61C  ENQ   (IEFSCCBS,IEFBATRM,E,5,SYSTEM),MF=L                         12398119
IEFSGCBS  DC    C'SYSJMPCH'                                                 12399019
IEFBATRM  DC    C'BATRM'                                                    12399919
STOPBIT   EQU   X'10'                                                        12400819
MSGAD     DC    A(QMTMSG)            ADDR OF MESSAGE CSECT              0847 12401719
*********************************************************************** A21364 12401819
QLIST     DSECT                          ENQ, DEQ PARAMETER LIST      A21364 12401919
*                                        ANY NUMBER OF ENTRIES        A21364 12402019
*                                        EACH ENTRY IS DESCRIBED      A21364 12402119
*                                        AS FOLLOWS:                  A21364 12402219
QLSTEND   DC    X'00'                    END OF LIST INDICATOR        A21364 12402319
LSTEND    EQU   X'FF'                    FF INDICATES END OF LIST     A21364 12402419
QMINLGTH  DC    X'00'                    MINOR NAME LENGTH            A21364 12402519
QATT      DC    B'00000000'              ENQ OR DEQ ATTRIBUTES        A21364 12402619
SYSTEM    EQU   X'40'                    SYSTEM IS ISSUING NQ(DQ)     A21364 12402719
HAVE      EQU   X'01'                    RET = HAVE                   A21364 12402819
USE       EQU   X'03'                    RET = USE                    A21364 12402919
QRETCDE   DC    X'00'                    RETURN CODE                  A21364 12403019
QMAJOR    DC    A(*)                     ADDRESS OF MAJOR NAME        A21364 12403119
QMINOR    DC    A(*)                     ADDRESS OF MINOR NAME        A21364 12403219
QENTLGTH  EQU   *-QLSTEND                LENGTH OF ONE ENTRY          A21364 12403319
*********************************************************************** A21364 12403419
QMTMSG    CSECT                                                          0847 12403519
          DS    0D                                                       0847 12404419
          PRINT DATA                                                   A27668 12404519
WT0429    WTO   'IEF429I INITIATOR '''' WAITING FOR WORK',MF=L,        A27668*12404619
                ROUTCDE=(2),DESC=(4)                                   A27668 12404719
          PRINT NODATA                                                 A27668 12404819
WT0429EN  EQU   *-WT0429        LENGTH OF ENTIRE WTO                   A27668 12404919
WT0429EX  EQU   WT0429EN+D8  SIZE OF WTO AND INIT ID                   A27668 12405019
```

```
*                                                                A27668 12405119
*   N O T E  -  IF WTO 'WT0429' CHANGES, CHECK EQU 'WT0429A' TO  A27668 12405219
*               ASSURE ITS VALUE IS STILL CORRECT                A27668 12405319
*                                                                A27668 12405419
WT0429A  EQU   23  NUMBER OF BYTES IN 1ST HALF OF WTO 'WT0429'   A27668 12405519
*                  UP TO AND INCLUDING THE 1ST QUOTE OF          A27668 12405619
*                  GENERATED TEXT.  INCLUDE 4 BYTE HEADER IN CT  A27668 12405719
*                                                                A27668 12405819
WT0429B  EQU   WT0429EN-WT0429A     LNG OF 2ND HALF OF WTO MSG   A27668 12405919
*                                 STARTING WITH 2ND QUOTE        A27668 12406019
*                                 INCLUDING MCS DATA.            A27668 12406119
*****************************************************************  0847 12407119
*                                                                       12408019
         EJECT                                                    099 12408919
IEFDSOSL CSECT                                                    099 12409819
*                                                                 099 12410719
* * * * * * * * THIS DIRECT SYSOUT (DSO) ROUTINE FIRST            099 12411619
*               BUILDS A SYSOUT ENTRY BLOCK OF ALL SYSOUT         099 12412519
*               CLASSES THIS JOB HAS CALLED FOR IN ITS JCL        099 12413419
*               FROM THE SYSOUT CLASS DIRECTORY (SCD). THIS       099 12414319
*               BLOCK WILL BE SEARCHED LATER IN THE ROUTINE.      099 12415219
*               THE NEXT FUNCTION IS TO SEARCH THE DIRECT         099 12416119
*               SYSOUT CONTROL BLOCK (DSOCB) CHAIN TESTING        099 12417019
*               EACH DSOCB TO SEE IF IT'S ELIGIBLE FOR THIS       099 12417919
*               JOB. THE DEQUEUED JOB'S JOB CLASS AND THE         099 12418819
*               SYSOUT ENTRY BLOCK WILL BE USED TO SELECT         099 12419719
*               THE DSOCB'S.  SELECTION IS INDICATED BY           099 12420619
*               PLACING THE PROBLEM PROGRAMS STORAGE PROTECT      099 12421519
*               KEY FROM THE JOBS JCT (JCTJSRNO) INTO THE         099 12422419
*               SELECTED DSOCB.  IF ONE OR MORE DSOCBS WERE       099 12423319
*               SELECTED BIT 6 IN JCTRSW2 (JCT) WILL BE TURNED ON TO099 12424219
*               INDICATE TO OTHER DSO ROUTINES THAT THERE ARE     099 12425119
*               ALLOCATED DSOCB'S FOR THE JOB.                    099 12426019
*                                                                 099 12426919
*              REGISTER ONE POINTS TO LOT/LCT AREA                099 12427819
*              LCTPARM1 CONTAINS ADR OF QMGR READ/WRITE ROUTINE   099 12428719
*              EPA POINTED TO BY THE QMPCL IN THE INPUT QMPA HAS  099 12429619
*              BEEN INITILIZED WITH THE CORE ADR OF THE READ IN SCD.099 12430519
*                                                                 099 12431419
         SAVE  (14,12)        SAVE CALLERS REGS                   099 12432319
*                                                                 099 12433219
         LR    R11,R1         ADR OF LCT/LOT AREA                 099 12434119
         USING IEFLOT,R11                                         099 12435019
*                                                                 099 12435919
         BALR  R12,R0         SET    MODULE BASE REG              099 12436819
         USING *,R12                                              099 12437719
         B     DSOGO                                              099 12438619
         DC    X'CCCC'                                            099 12439519
         DC    C'IEFDSOSL'                                        099 12440419
         DC    X'06201969'                                        099 12441319
         DC    X'CCCC'                                            099 12442219
DSOGO    DS    0H                                                 099 12443119
*                                                                 099 12444019
         LA    R0,SAVARASZ+SYSIZE  SIZE OF REG SAVEAREA           099 12444919
*                                  AND SYSOUT BLOCK AREA          099 12445819
*                                  FOR GETMAIN                    099 12446719
         GETMAIN R,LV=(0)     GET REG SAVE AND SYSOUT BLOCK AREA  099 12447619
```

```
*                                                                    099 12448519
         XC    N0(SAVARASZ+SYSIZE,R1),N0(R1) CLEAR ENTIRE AREA       099 12449419
         ST    R13,N4(,R1)      SAVE CALLERS REG SAVEAREA ADR        099 12450319
         ST    R1,N8(,R13)      MY REG SAVEAREA ADR INTO CALLERS     099 12451219
*                              REG SAVEAREA                          099 12452119
         LR    R13,R1     MY REG SAVEAREA AND SYSOUT BLOCK AREA      099 12453019
         USING SAVESYS,R13     SET BASE                              099 12453919
*                                                                    099 12454819
         L     R9,LCTJCTAD     JCT CORE ADR                          099 12455719
         USING IEFJCT,R9       SET BASE                              099 12456619
*                                                                    099 12457519
         LA    R10,OMGR1       ADR OF INPUT OMPA                     099 12458419
         USING IOPARAMS,R10     SET BASE                             099 12459319
*                                                                    099 12460219
*                                                                    099 12461119
         L     R7,OMPCL  OMGR EXTERNAL PARM ADR                      099 12462019
         L     R7,N0(,R7) ADR OF SCD AREA USED BY CALLING PROG       099 12462919
         USING SCDAREA,R7      SET BASE FOR SCD                      099 12463819
         MVI   SCDPAD,HEXFF    CONTINUATION FLAG IN 1ST SCD          099 12464719
*                              AFTER PROBABLE 24TH ENTRY             099 12465619
         DROP  R7                                                    099 12466519
*                                                                    099 12467419
* * * * * * * * * BUILD SYSOUT ENTRY BLOCK FROM SCD                  099 12468319
*                                                                    099 12469219
         LR    R2,R7           INDEX REG FOR SCD                     099 12470119
         USING SCDAREA,R2      SET SCD BASE                          099 12471019
         LA    R4,SYSCLS       SYSOUT ENTRY BLOCK AREA               099 12471919
         USING SYSCLS,R4       SET SYSOUT BLOCK BASE                 099 12472819
         LA    R3,SYSNO        MAX ENTRIES LOOP REG                  099 12473719
*                                                                    099 12474619
DS02A    EQU   *                                                     099 12475519
         TM    SCDCLS,HEXFF    TEST FOR END OF ENTRIES/END OF        099 12476419
*                              FIRST SCD/SYSOUT CLASS ENTRY          099 12477319
         BO    DS02C      ALL ONES - END OF FIRST SCD, READ IN       099 12478219
*                                 NEXT SCD IF ONE AND CONTINUE       099 12479119
         BZ    DS03      ALL ZERO - END OF ENTRIES IN SCD            099 12480019
*                                                                    099 12480919
*                        MIXED - SAVE SYSOUT CLASS                   099 12481819
*                                                                    099 12482719
         MVC   SYSCLS,SCDCLS  SAVE SCD SYSOUT CLASS                  099 12483619
*                                                                    099 12484519
         LA    R2,SCDENTRY(,R2)     INCREASE SCD BASE REG            099 12485419
         LA    R4,SYSENTRY(,R4)     INCREASE SYSOUT BLOCK BASE       099 12486319
         BCT   R3,DS02A             LOOP LIMITER                     099 12487219
         B     DS03       END OF ENTRIES IN SCD                     099 12488119
         DROP  R2,R4                                                 099 12489019
*                                                                    099 12489919
* * * * * * * * * READ IN NEXT SCD IF ONE                             099 12490819
*                                                                    099 12491719
DS02C    EQU   *                                                     099 12492619
         USING SCDAREA,R7      SET SCD BASE                          099 12493519
         MVI   SCDNXT+N3,N0    ZERO L/O OF TTR BEFORE TEST           099 12494419
         L     R2,SCDNXT       GET TTR OF NEXT SCD                   099 12495319
         DROP  R7                                                    099 12496219
         LTR   R2,R2           IS THERE A TTR                        099 12497119
         BZ    DS03       NO - END OF ENTRIES IN SCD                 099 12498019
*                                                                    099 12498919
```

```
*                          YES - READ IN NEXT SCD                      099 12499819
         L      R1,QMPCL   QMGR EXTERNAL PARM ADR                      099 12500719
         ST     R2,N4(,R1) TTR OF SCD TO BE READ                       099 12501619
         ST     R7,N0(,R1) READ IN AREA FOR NEXT SCD (SAME AS          099 12502519
*                          1ST SCD)                                    099 12503419
         MVI    QMPOP,QMREAD    READ FUNCTION                          099 12504319
         BAL    R6,QMGRRW           GO TO QMGR READ WRITE ROUTINE      099 12505219
         LR     R2,R7                     SCD AREA                     099 12506119
         B      DSO2A           CONTINUE PROCESSING WITH THIS SCD      099 12507019
QMGRRW   EQU    *               QMGR READ WRITE INTERFACE              099 12507919
         MVI    QMPCL,HEX01     READ/WRITE ONE RECORD                  099 12508819
         LR     R1,R10          ADR OF QMGR1                           099 12509719
*                               R13 POINTS TO SAVEAREA                 099 12510619
         L      R15,LCTPARM1    ADR OF QMGR READ/WRITE ROUTINE         099 12511519
         BALR   R14,R15         GO TO QMGR                             099 12512419
*                                                                      099 12513319
         LTR    R15,R15   QMGR ERROR TEST                              099 12514219
         BNZ    QMGRIO    QMGR I/O ERROR                               099 12515119
         BR     R6              RETURN TO CALLER                       099 12516019
*                                                                      099 12516919
*                                                                      099 12517819
*                                                                      099 12518719
*                                                                      099 12519619
DSO3     EQU    *                                                      099 12520519
         LA     R1,SYSNO  MAX ENTRIES IN SYSOUT BLOCK                  099 12521419
         SR     R1,R3     LOOP COUNT FROM  MAX ENTRIES                 099 12522319
*                          GIVES NUMBER OF SYSOUT CLASSES AVAILABLE    099 12523219
         STC    R1,SYSENTS      SAVE NUMBER OF SYSOUT CLASSES          099 12524119
*                                                                      099 12525019
* * * * * * * * * LOOP THROUGH DSOCB'S USING THE DEQUEUED JOB'S        099 12525919
*                 JOB CLASS AS THE FIRST TEST IN SELECTING DSOCBS      099 12526819
*                                                                      099 12527719
         L      R7,CVTPTR       LOCATION OF CVT                        099 12528619
         USING  CVTDSECT,R7     CVT BASE                               099 12529519
         L      R7,CVTMSER      ADR OF MASTER SCH DATA AREA            099 12530419
         USING  BASE,R7         M/S BASE REG                           099 12531319
*                                                                      099 12532219
         ENQ    MF=(E,DSOCBNQ)       ENQ ON DSOCB CHAIN                099 12533119
*                                                                      099 12534019
         L      R7,BADSO  FIRST DSOCB ADR                              099 12534919
         USING  IEFDSOCB,R7     SET BASE FOR DSOCB                     099 12535819
*                                                                      099 12536719
         LA     R4,L'DSOJCLS    LENGTH OF 'DSOJCLS' FIELD IN DSOCB.    099 12537619
*                               REG WILL ALSO BE USED AS A SWITCH      099 12538519
*                                                                      099 12539419
DSO3B    EQU    *                                                      099 12540319
         LA     R7,N0(,R7)      CLEAR H/O                              099 12541219
         LTR    R7,R7           DSOCB ADR ZERO                         099 12542119
         BZ     DSO5            YES - DO END OF DSOCB PROCESSING       099 12543019
         CLI    DSOID,HEXFD     NO - CHECK FOR DSOCB ID                099 12543919
         BNE    DSO3A           WRONG ID, GET NEXT DSOCB               099 12544819
         TM     DSOKEY,HEXFF    IS THIS DSOCB IN USE                   099 12545719
         BNZ    DSO3A           YES - GET NEXT DSOCB                   099 12546619
         TM     DSOIND1,DSONOOP      NO - IS DSOCB FROZEN              099 12547519
         BNZ    DSO3A      YES - GET NEXT DSOCB                        099 12548419
         TM     DSOIND2,DSOSM   IS A STOP/MODIFY PENDING               099 12549319
         BNZ    DSO3A           YES - THEN BYPASS THIS DSOCB           099 12550219
```

```
*                                NO - SET REGS TO EXAMINE DSOCB        099 12551119
*                                JOB CLASSES                           099 12552019
         LA     R2,DSOJCLS       ELIGIBLE JOB CLASSES AREA             099 12552919
         USING  DSOJCLS,R2       SET BASE                              099 12553819
         LPR    R3,R4            LOOP LIMIT - R4 WILL BE NEG IF        099 12554719
*                                ANY DSOCB'S HAVE BEEN SELECTED,       099 12555619
*                                BUT VALUE REMAINS UNCHANGED           099 12556519
*                                                                      099 12557419
DS03C    EQU    *                                                      099 12558319
         CLI    DSOJCLS,NO       END OF ENTRIES TEST                   099 12559219
         BE     DS03A            YES - GET NEXT DSOCB                  099 12560119
         CLC    QMTPY,DSOJCLS    JOB'S JOB CLASS VS DSOCB JOB CLASSES  099 12561019
         BE     DS04       A MATCH - GO TEST SYSOUT CLASS              099 12561919
*                                                                      099 12562819
         LA     R2,N1(,R2)       INCREASE REG BY ONE                   099 12563719
         BCT    R3,DS03C         LOOP AGAIN IF MORE ENTRIES            099 12564619
*                                                                      099 12565519
         DROP   R2                                                     099 12566419
*                                                                      099 12567319
DS03A    EQU    *                                                      099 12568219
         L      R7,DSONXT        GET NEXT DSOCB ADR                    099 12569119
         B      DS03B            TEST JOB CLASSES IN NEXT DSOCB        099 12570019
*                                                                      099 12570919
*                                                                      099 12571819
* * * * * * * * * A JOB CLASS MATCH HAS OCCURRED SO NOW MATCH THE      099 12572719
*                 DSOCB'S SYSOUT CLASS TO THE SYSOUT BLOCK ENTRIES     099 12573619
*                                                                      099 12574519
DS04     EQU    *                                                      099 12575419
         LA     R2,SYSCLS        START OF SYSOUT BLOCK TO BE SCANNED   099 12576319
         USING  SYSCLS,R2        SET BASE                              099 12577219
         SR     R3,R3            CLEAR REG                             099 12578119
         IC     R3,SYSENTS       NUMBER OF ENTRIES IN SYSOUT BLOCK     099 12579019
*                                                                      099 12579919
DS04A    EQU    *                                                      099 12580819
         CLC    DSOSCLS,SYSCLS TEST SYSOUT CLASS                       099 12581719
         BE     DS04B            EQUAL - MARK DSOCB ALLOCATED          099 12582619
         LA     R2,SYSENTRY(,R2)     UNEQUAL - INCREASE INDEX REG      099 12583519
         BCT    R3,DS04A         LOOP AGAIN IF MORE ENTRIES            099 12584419
         B      DS03A            END OF ENTRIES - GET NEXT DSOCB       099 12585319
*                                                                      099 12586219
DSOEX    MVC    SYSCLS(NO),SYSCLS+SYSENTRY     TO SHIFT SYSOUT         099 12587119
*                                        BLOCK UP 1 BYTE               099 12588019
*                                        MOVE INCLUDES ONE BYTE        099 12588919
*                                        PAD AT END OF BLOCK           099 12589819
         DROP   R2                                                     099 12590719
*                                                                      099 12591619
* * * * * * * * * JOB CLASS AND SYSOUT CLASS MATCH HAS OCCURRED        099 12592519
*                 SO MARK DSOCB ALLOCATED FOR THIS JOB AND             099 12593419
*                 STRIKE THE SYSOUT ENTRY FROM THE SYSOUT              099 12594319
*                 BLOCK TO PREVENT SELECTION OF ANOTHER POSSIBLE       099 12595219
*                 DSOCB OF SAME JOB AND SYSOUT CLASS.                  099 12596119
*                                                                      099 12597019
DS04B    EQU    *                                                      099 12597919
         MVC    DSOKEY,JCTJSRND      MOVE PROTECT KEY FROM JCT         099 12598819
*                                    INTO THE DSOCB TO MARK            099 12599719
*                                    IT ALLOCATED (XXXX0000)           099 12600619
         LNR    R4,R4            NEG REG INDICATES ONE OR MORE         099 12601519
```

```
*                                DSOCB'S HAVE BEEN SELECTED                 099 12602419
         CLC    DSOSCLS,JCTJMGPO     IS THE MSGCLASS EQUAL TO               099 12603319
*                                    THE DSOCB'S SYSOUT CLASS               099 12604219
         BNE    DS04C            NO - CONT PROCESSING                       099 12605119
         OI     DSOIND1,DSOMSGCL YESTURN ON MSGCLASS BIT IN DSOCB           099 12606019
*                                                                           099 12606919
* * * * * * * * * STRIKE SYSOUT CLASS FROM SYSOUT BLOCK                      099 12607819
*                                                                           099 12608719
DS04C    EQU    *                                                          099 12609619
         LA     R3,SYSCLS+(SYSNO*SYSENTRY)-1  END OF SYSOUT BLOCK           099 12610519
         SR     R3,R2            TO GET NUMBER OF BYTES TO BE MOVED         099 12611419
*                                NOTE - A LOW ORDER VALUE ONLY NOW          099 12612319
*                                       EXISTS IN R3                        099 12613219
         EX     R3,DSOEX         SHIFT SYSOUT BLOCK ENTRIES                 099 12614119
*                                LEFT ONE BYTE PLUS PAD BYTE                099 12615019
         IC     R3,SYSENTS       PRESENT NUMBER OF ENTRIES IN BLOCK         099 12615919
         BCTR   R3,R0            SUBTRACT ONE                               099 12616819
         STC    R3,SYSENTS       STORE REVISED COUNT                        099 12617719
         LTR    R3,R3            IS COUNT ZERO                              099 12618619
         BZ     DS05             YES - DO END OF DSOCB PROCESSING           099 12619519
         B      DS03A            NO - GO GET NEXT DSOCB                     099 12620419
*                                                                           099 12621319
QMGRIO   EQU    *                                                          099 12622219
         LR     R7,R15     SAVE CONDITION CODE FROM QMGR                   099 12623119
         B      DS05B      DO END OF MODULE PROCESSING                     099 12624019
*                                                                           099 12624919
*                                                                           099 12625819
* * * * * * * * * ALL DSOCB'S HAVE BEEN SCANNED AND TESTED,                 099 12626719
*                 OR ALL SYSOUT ENTRIES IN THE SYSOUT BLOCK                 099 12627619
*                 HAVE BEEN PROCESSED.                                      099 12628519
*                 NOW TEST IF ANY DSOCB'S WERE SELECTED.                    099 12629419
*                 IF YES MARK THE JCT TO INDICATE THIS,                     099 12630319
*                 RELEASE SAVE AND WORK AREAS AND RETURN                    099 12631219
*                 TO CALLER.                                                099 12632119
*                                                                           099 12633019
DS05     EQU    *                                                          099 12633919
         LTR    R4,R4            TEST IF ANY DSOCB'S WERE SELECTED          099 12634819
         BP     DS05A            PLUS - NO DSOCB'S SELECTED                 099 12635719
         OI     JCTRSW2,JCTDSOJB     NEG- ONE OR MORE DSOCB'S WERE          099 12636619
*                                    SELECTED                               099 12637519
DS05A    EQU    *                                                          099 12638419
         SR     R7,R7      CLEAR TEMP CONDITION CODE REG                   099 12639319
*                                                                           099 12640219
         DEQ    MF=(E,DSOCBNO)       DEQ ON DSOCB CHAIN                    099 12641119
*                                                                           099 12642019
DS05B    EQU    *          ENTER HERE IF PASSING CONDITION CODES           099 12642919
         LR     R1,R13           AREA TO BE RELEASED                        099 12643819
         L      R13,SVEARA+N4  GET CALLER'S SAVEAREA ADR                    099 12644719
         XC     SVEARA+N8(N4),SVEARA+N8  CLEAR MY SAVEAREA                  099 12645619
*                                        ADR IN CALLERS                     099 12646519
*                                        SAVEAREA                           099 12647419
         DROP   R13                                                         099 12648319
*                                                                           099 12649219
         LA     R0,SAVARASZ+SYSIZE  SIZE OF AREA TO BE RELEASED             099 12650119
         FREEMAIN R,LV=(0),A=(1)                                            099 12651019
*                                                                           099 12651919
         LR     R15,R7     LOAD ANY CONDITION CODES                        099 12652819
```

```
         RETURN (14,12),RC=(15)     RETURN TO CALLER                    099 12653719
*                                                                       099 12654619
* * * * * * * * * EQUATES                                               099 12655519
*                                                                       099 12656419
N0       EQU   0                                                       099 12657319
N1       EQU   1                                                       099 12658219
N2       EQU   2                                                       099 12659119
N3       EQU   3                                                       099 12660019
N4       EQU   4                                                       099 12660919
N7       EQU   7                                                       099 12661819
N8       EQU   8                                                       099 12662719
HEXFF    EQU   X'FF'                                                   099 12663619
HEX01    EQU   X'01'                                                   099 12664519
HEXFD    EQU   X'FD'                                                   099 12665419
*                                                                       099 12666319
* * * * * * * * * ENQ/DEQ FOR DIRECT SYSOUT CONTROL BLOCKS (DSOCB)     099 12667219
*                                                                       099 12668119
DSOCBNQ  ENQ   (DSOCBNQQ,DSOCBNQR,E,05,SYSTEM),MF=L                    099 12669019
*                                                                       099 12669919
* * * ENQ/DEQ Q AND R NAMES                                             099 12670819
*                                                                       099 12671719
DSOCBNQQ DC    CL8'SYSIEFSD'   Q - MAJOR NAME                          099 12672619
DSOCBNQR DC    C'DSOCB'        R - MINOR NAME                          099 12673519
*                                                                       099 12674419
*                                                                       099 12675319
* * * * * * * * * SYSOUT CLASS DIRECTORY (SCD)                          099 12676219
*                                                                       099 12677119
SCDAREA  DSECT                                                         099 12678019
SCDCLS   DS    CL1  SYSOUT CLASS                                       099 12678919
         DS    CL6  Q MGR DATA FOR SYSOUT Q                            099 12679819
SCDENTRY EQU   *-SCDCLS  SIZE OF EACH SYSOUT ENTRY                     099 12680719
         DS    CL(SCDENTRY*23)  24 ENTRIES IN SCD                      099 12681619
SCDPAD   DS    CL4  PAD                                                099 12682519
SCDNXT   DS    F    TTR OF NEXT SCD                                    099 12683419
*                                                                       099 12684319
* * * * * * * * * SYSOUT CLASS BLOCK                                    099 12685219
*                                                                       099 12686119
SAVESYS  DSECT                                                         099 12687019
SVEARA   DS    CL72       REG SAVEAREA                                 099 12687919
SAVARASZ EQU   *-SVEARA        SIZE OF SAVE AREA                       099 12688819
SYSENTS  DS    CL1  NUMBER OF ENTRIES ENTERED IN BLOCK                 099 12689719
SYSCLS   DS    CL1  SYSOUT CLASS                                       099 12690619
SYSENTRY EQU   *-SYSCLS  SIZE OF EACH SYSOUT ENTRY                     099 12691519
SYSNO    EQU   36   MAX NUMBER OF ENTRIES                              099 12692419
*                                                                       099 12693319
         DS    CL(SYSENTRY*(SYSNO-1))   FINISH OUT BLOCK               099 12694219
         DS    CL1        PAD FOR 'MOVE' TO STRIKE SYSOUT ENTRIES      099 12695119
*                        FROM THE SYSOUT BLOCK.  HEX'00'               099 12696019
SYSIZE   EQU   *-SYSENTS       TOTAL SIZE OF SYSOUT BLOCK              099 12696919
*                                                                       099 12697819
*                                                                       099 12698719
IEFDSOCB DSECT                                                         099 12699619
         IEFDSOCB                                                      099 12700519
         EJECT                                                         099 12701419
RSAR     DSECT                     THIS DSECT IS USED TO MAP ALLOCATE/  12710014
SAVEAREA DS    18F                 TERMINATE REG SAVE AREAS FOR USE BY  12720014
REMLST   DS    2F                  THIS MODULE                          12730014
```

```
NOWRKECB DS     2F                                                      12740014
ECBLST   DS     2F                                                      12750014
WTOSWTCH DS     C                    SWTCH ON SAYS WRITE 'INPUT QUEUE   12760014
*                                    EMPTY' MESSAGE TO CONSOLE          12770014
*                                                                       12780014
  IEEBASEA
         EJECT                                                          12870017
CVTDSECT DSECT                                                          12880000
 CVT                                                                    12900000
         EJECT                                                          12920000
IEFCSCB  DSECT                                                          12940000
 IEECHAIN                                                               12960000
         EJECT                                                          12980000
IEFJCT   DSECT                                                          13000000
 IEFAJCTB                                                               13020000
IEFSCT   DSECT                                                          13026017
         IEFASCTB                                                       13032017
*                                                                       13040000
JCTDETDA EQU   INJMJCT+88          1ST TTR IN ENQ DSNAME TABLE          13060000
         EJECT                                                          13080000
*********************************************************************** 13100000
*                                                                     * 13120000
*        THE FOLLOWING REPRESENTS A BLOCK OF MAIN STORAGE WHICH IS    * 13140000
*        ALLOCATED FOR THE LIFE OF                                    * 13160000
*        OF THIS INITIATOR.  IT CONTAINS:                             * 13180000
*                                                                     * 13200000
*              (1)  THE LCT (LINKAGE CONTROL TABLE)                   * 13220000
*              (2)  A 2 LEVEL REGISTER SAVE AREA FOLLOWED BY THE      * 13240000
*                   THE QUEUE MANAGER PARAMETER AREA                  * 13260000
*              (3)  AN ALTERNATE QUEUE MANAGER PARAMETER AREA         * 13280000
*                                                                     * 13300000
*********************************************************************** 13320000
IEFLOT   DSECT                                                          13340000
  IEFALLCT                                                              13360000
LCTBATMN DS     F  *****TO BE ADDED TO LCT                              13380000
LCTSOQMP DS     F  *****TO BE ADDED TO LCT(VMS ONLY)  POINTER TO        13400000
*                       SYSOUT QUEUE MANAGER PARAMETER AREA             13420000
LCTSREG  DS     F  *****TO BE ADDED TO LCT(MVT ONLY) - PTR TO STOP INIT 13440014
*                                                      ECB              13460014
LCTINTSW DS     0C                  INITIATOR INTERNAL SWITCHES     I272 13462019
LCTIHIER EQU    128                RUN IN HIERARCHY ONE             I272 13464019
LCTSDOXX EQU    32                 ATTACH IEFSDOXX                  I272 13466019
LCTMINRG EQU    16                 JOB FLUSH - USE MINPAR           I272 13468019
LCTSTART EQU    8                  TASKNAME NOT ON COMMAND          I272 13470019
LCTSTOP  EQU    4                  INITIATOR INTERNAL STOP          I272 13472019
LCTABEND EQU    2                  EXECUTED PROGRAM ABENDED         I272 13474019
LCTSPLP  DS     F  *****TO BE ADDED TO LCT(MVT ONLY) - PTR TO START PAR- 13480014
*                                                      AMETER LIST      13500014
LCTTMWRK DS     4F *****TO BE ADDED TO LCT(VMS ONLY) TIMER WORK AREA    13520000
LCTJOBLB DS     F  *****TO BE ADDED TO LCT(VMS ONLY) JOBLIB DCB PTR     13540000
LCTATLST DS     F  *****TO BE ADDED TO LCT(VMS ONLY)  POINTER TO        13560000
*                       ALLOCATE/TERMINATE PARAMETER LISTS              13580000
REGSAVE  DS     36F                      ALLOCATE/TERMINATE REGSAVE AREA 13600000
QMGR1    DS     9F                       QUEUE MANAGER PARAMETER AREA   13620000
QMGR2    DS     9F                       ALTERNATE QUEUE MANAGER AREA   13640000
TRSTKINF DS     2F                 NEEDED FOR TRACK STACKING AND QUEUE  13660000
*                                  BREAK INFORMATION.  1ST BYTE TO CON- 13680000
```

```
*                                TAIN  NUMBER OF BUFFERS, NEXT 3 BYTES  13700000
*                                FOR STACK ADDR, NEXT 4 BYTES FOR       13720000
*                                QUEUE BREAK INFORMATION                13740000
QMWTQ1    EQU    QMGR1+24        PTR IN QMPA TO TRK STACK INFO          13760000
QMWTQ2    EQU    QMGR2+24        PTR IN QMPA TO TRK STACK INFO          13780000
FCBLIST   DS     1F                                                     13786015
LCTIDENT  DC     2F'0'             HOLDER FOR IDENTIFIER                13792015
LCTFORCE  DS     CL8                                                I241 13793018
LCTLIMIT  DS     C                                                  I241 13794018
FRCPRTY   DS     C                                                  I241 13795018
INITPRTY  DS     C                 INITIATOR'S PRTY                 I241 13796018
*   THESE FIELDS ARE NEEDED FOR L-SHAPE/INIT MERGE              *   I272 13796219
          DS     0F                                                 I272 13796419
LCTOPSW1  DS     0C                INITIATOR OPTIONS BYTE 1         I272 13796619
LCTPKEYF  EQU    128               DONT GET PROTECT KEY             I272 13796819
LCTDWEF   EQU    64                DONT PROCESS DEDICATED WORKE     I272 13797019
LCTSTMDF  EQU    32                DONT PROCESS STOP/MODIFY         I272 13797219
LCTMINPF  EQU    16                GET REGION SIZE SPECIFIED        I272 13797419
LCTCANF   EQU    8                 ALLOW CANCEL ONLY AT ALLOC       I272 13797619
LCTONEJF  EQU    4                 PROCESS ONLY ONE JOB             I272 13797819
LCTICMDF  EQU    2                 DONT PROCESS INITIATOR CMDS      I272 13798019
LCTEXIT   DS     F                 ADDRESS INITIATOR EXIT LIST      I272 13798219
LCTOPSW2  DS     0C                INITIATOR OPTIONS BYTE 2         I272 13798419
LCTTIMEF  EQU    128               DONT TIME THIS JOB               I272 13798619
LCTCRF    EQU    64                DONT ALLOW CHECKPT/RESTART       I272 13798819
LCTDSOF   EQU    32                DONT PROCESS DSO                 I272 13799019
LCTCOM    DS     F                 COMMUNICATIONS PARM AREA PTR     I272 13799219
LCTJSCB   DS     F                 ADDRESS OF JSCB FOR TASK         I254 13799419
IEFEND    EQU    *                      END OF LIFE-OF-TASK BLOCK         13800000
          EJECT                                                           13820000
QMRDSECT  DS     0F                                                      13840000
          IEFQMRES                                                        13860000
 IEFQMNGR                                                                 13880000
QMDSC     EQU    QMTID+2                                            CR17 13890017
CANCELED  EQU    X'01'    SET BY ALTER ROUTINE FOR IN-Q JOB CAN35L       13900000
          EJECT                                                           13910017
DSNIN     DSECT                                                           13920000
          DS     0D                                                       13940000
*    DSNAME ENQ TABLE INPUT AREA                                          13960000
ICTTR     DS     CL3                          CURRENT TTR                 13980000
          DS     CL1                          TABLE ID                    14000000
ILTTR     DS     CL3                          LAST TTR                    14020000
          DS     CL1                          ALIGNMENT ZERO              14040000
ICHAR     DS     F                            ACCUM. DSNAME CHAR COUNT    14060000
ICNT      DS     H                            ACCUM. DSNAME COUNT         14080000
          DS     CL162                        DSNAME RECORDS              14100000
*                                                                         14120000
*    DSNAME DEQ TABLE OUTPUT AREA                                         14140000
OCTTR     DS     CL3                          CURRENT TTR                 14160000
OTABID    DS     CL1                          TABLE ID                    14180000
OLTTR     DS     CL3                          LAST TTR                    14200000
          DS     CL1                                                      14220000
OCHAR     DS     F                            ACCUM. DSNAME CHAR COUNT    14240000
OCNT      DS     H                            ACCUM DSNAM COUNT           14260000
OSTART    DS     CL162                        DSNAME RECORDS              14280000
OEND      EQU    *                                                        14300000
*                                                                         14320000
```

```
* TWO 4 BYTE AREAS FOR TBUILD ROUTINE
         DS     0D                                                    14340000
TREE     DS     F                                                     14360000
         DS     0D                                                    14380000
BUD      DS     F                                                     14400000
*                                                                     14420000
IEFLOT   DSECT                                                        14440000
         ORG    REGSAVE+72                                            14460000
* EXTERNAL PARAMETER AREA FOR OMGR                                    144800 0
QEXPARM  DS     F                                                     14500000
QTTR     DS     CL3                      CORE ADDR FOR READ OR WRITE  14520000
         DS     CL1                      TTR                          14540000
*                                                                     14560000
*  WORK AREA                                                          14580000
*                                                                     14600000
LENGTH   DS     H                                                     14620000
TTRBUF1  DS     CL3                      CURRENT DSNAME LENGTH        14640000
TTRBUF2  DS     CL3                      BUFFERS TO HOLD TTR S FOR    14660000
TESTEOD  DS     CL1                      O MGR WRITE FUNCTION         14680000
CHARSAV  DS     F                        END OF DATA INDICATOR-X'FF'  14700000
CNTSAV   DS     H                        DSNAME COUNT AND CHARACTER   14720000
*                                        SAVE AREAS                   14740000
* PARAMETER  LIST FOR TBUILD AND TSTRIP ROUTINES                      14760000
*                                                                     14780000
TBLPARM  DS     F                                                     14800000
DSNBEG   DS     F                            ADDR OF TREE-8           14820000
DSNEND   DS     F                        2ND PARM LIST ENTRY          14840000
IEL      DSECT                          1ST PARM LIST ENTRY           14860000
         IEZIEL  EXITS=RTN                                            14862019
COMPA    DSECT                                                        14864019
         IEZCOM                                                       14866019
         IEZJSCB                                                      14868019
CIBDSECT DSECT                                                        14870019
         IEZCIB                                                  I272 14872019
         IEFWTPCB                                                I272 14874019
         END                                                    M4339 14877019
                                                                      14880000
```

1

```
         TITLE 'IEFSD104-MS/1 STEP DELETE INTERFACE'                    00020000
IEFSD104 CSECT                                                          00040000
*                                                                M2696  00041019
*                                                                M3881  00043019
*011200-011800,016200-016400,021400-021600                       I272   00046019
*002600,004400,005600,006400,010800-015800,028600                 I272  00052019
*                                                                M4373  00056019
         BALR  R12,0                                                    00060000
*                                                                       00080000
*************************************************************************00100000
*                                                                       00120000
*                MS/1 STEP DELETE INTERFACE                             00140000
*                                                                       00160000
*************************************************************************00180000
*                                                                       00200000
* STATUS - CHANGE LEVEL 000                                             00220000
*                                                                       00240000
* FUNTION (1) READ LCT FROM JOB QUEUE FOR SYSTEM TASKS             I272 00250019
*                                                                       00280000
* ENTRY POINT: IEFSD104 FROM IEFSD263.                                  00300000
*                                                                       00320000
* INPUT: REGISTER ONE POINTING TO PARAMETER LIST CONSISTING OF:         00340000
*              (1) USER PARAMS POINTER                                  00360000
*              (2) ECB LIST POINTER                                     00380000
*              (3) ATTACH L LIST POINTER                                00400000
*              (4) LCT POINTER                                          00420000
*              (5) SYSTEM TASKS - POINTER TO PARM AREA          I272    00430019
*                  NON SYSTEM TASKS - ZERO                      I272    00440019
*              (6) TIOT LIST POINTER                                    00460000
*              (7) DCB ADDRESS                                  I270    00470019
*                                                                       00480000
* OUTPUT - THE INPUT PARAMETER LIST CONTAINING AN UPDATED TIOT LIST     00500000
*          POINTER                                                      00520000
*                                                                       00540000
* EXTERNAL REFERENCES - IEFSD514                                   I272 00560019
*                                                                       00580000
* EXIT -  IEFSD164                                                      00600000
*                                                                       00620000
* TABLES/WORK AREAS  TIOT,LCT,CSCB                                 I272 00640019
*                                                                       00660000
* ATTRIBUTES - REENTRANT                                                00680000
*                                                                       00700000
*************************************************************************00720000
         EJECT                                                          00740000
         USING *,R12                                                    00760000
         L     R5,ASD062          GET ADDRESS OF IEFSD062.
         LA    R6,DISPLACE(R5)    BUMP THE ADDRESS TO THE FTT FLAG.
         MVI   0(R6),X'FF'        SET THE FLAG 'FROM AFAR'.
         USING IEFCSCB,R5                                         I272  00765019
         USING IEFLOT,R6                                          I272  00770019
         USING IOPARAMS,R7                                        I272  00775019
*************************************************************************00780000
*                                                                       00800000
* THE FOLLOWING SECTION OF CODE SERVES ONLY TO IDENTIFY THIS MODULE     00820000
* IN A MEMORY DUMP                                                      00840000
*                                                                       00860000
         B     FIRST                                                    00880000
```

```
         DC     X'CCCC'                                                 * 00900000
         DC     C'IEFSD104'                                             * 00920000
         DC     X'06081966'                                             * 00940000
         DC     X'CCCC'                                                 * 00960000
FIRST    DS     0H                                                      * 00980000
*                                                                       * 01000000
*********************************************************************** 01020000
         EJECT                                                           01040000
         LR     R2,R1                     SAVE PARAMETER LIST REGISTER   01060000
         L      R3,X16(R2)          LOAD SYSTEM TASK INDICATOR       I272 01070019
         LTR    R3,R3               TEST FOR SYSTEM TASK             I272 01080019
         BZ     SD104005            BRANCH NOT SYSTEM TASK           I272 01090019
         L      R5,X8(R3)           LOAD CSCB ADDRESS                I272 01100019
         LA     R0,X104             GETMAIN FOR 24 PARM AREA AND     I272 01110019
         GETMAIN R,LV=(0)           72 REG SAVE AREA + 8 REMOTE LI   I272 01120019
         LA     R13,X32(R1)         SAVE AREA ADDRESS                I272 01130019
         LA     R7,CHQPA            ADDRESS OF QMPA IN CSCB          I272 01140019
         ST     R7,X0(R1)           STORE ADDRESS IN PARM            I272 01150019
         XC     X4(X20,R1),X4(R1)   ZERO PARM AREA                  M2696 01160019
         MVC    X4(X3,R1),X4(R3)    MOVE TTR TO PARM AREA            M2696 01170019
         LA     R4,X24(R1)          ADDRESS OF REMOTE LIST           I272 01180019
         ST     R4,QMPCL            REMOTE LIST PTR IN QMPA          I272 01190019
         MVI    QMPOP,X4            INDICATE READ OPERATION          I272 01200019
         LR     R10,R1              SAVE ADDRESS                     I272 01210019
         L      R15,SD514RD         ADDRESS OF IEFSD415              I272 01220019
         BALR   R14,R15             READ LCT FROM JOB QUEUE          I272 01230019
         LTR    R15,R15             TEST FOR I/O ERROR               I272 01240019
         BZ     SD104002            BRANCH NO I/O ERROR              I272 01250019
         LA     R1,X'080'           OB0 ABEND                        I272 01260019
         SLA    R1,X12                                               I272 01270019
         ABEND (1),DUMP                                              I272 01280019
SD104002 L      R6,X8(R1)           ADDRESS OF LCT                   I272 01290019
         MVC    QMGR1(X36),CHQPA    MOVE MAIN QMPA TO LCT            I272 01293019
         MVC    QMGR2(X36),CHSQA    MOVE SYSOUT QMPA TO LCT          I272 01296019
         LA     R7,QMGR1            ADDRESS OF QMPA                  I272 01300019
         L      R11,QMWTQ            ADDRESS OF TRACK STACK INFO     I272 01303019
         MVC    TRSTKINF(X8),X0(R11)   MOVE TS INFO                  I272 01306019
         LA     R4,REGSAVE+72       ADDRESS OF REMOTE LIST           I272 01310019
         ST     R4,QMPCL            ADDRESS OF REMOTE LT IN QMPA     I272 01320019
         LA     R4,TRSTKINF         ADDRESS OF TRACK STACK INFO      I272 01330019
         ST     R4,QMWT01           STORE TRACK STACK INFO           I272 01340019
         ST     R4,QMWT02           IN BOTH QMPAS                    I272 01350019
         LA     R4,REGSAVE          ADDRESS OF SAVE AREA             I272 01360019
         ST     R4,LCTCMCBA         STORE IN LCT                     I272 01370019
         LA     R4,QMGR2            ADDRESS OF SYSOUT Q MGR          I272 01380019
         ST     R4,LCTSOQMP         PARM AREA IN LCT                 I272 01390019
         L      R8,LCTJSCB          ADDRESS OF JOB STEP JSCB         I272 01391019
         USING IEZJSCB,R8                                            I272 01392019
         L      R8,JSCBWTP          ADDRESS OF WTP CONTROL BLK       I272 01393019
         DROP R8                                                     I272 01394019
         USING WTPCB,R8                                              I272 01395019
         MVC    WTPQMPAD,LCTSOQMP+X1 MOVE ADDRESS OF QMPA            I272 01396019
         DROP R8                                                     I272 01397019
         LA     R0,X104             LENGTH TO BE FREED               I272 01400019
         LR     R1,R10              RESTORE ADDRESS                  I272 01410019
         FREEMAIN R,LV=(0),A=(1)    FREE PARM REMOTE LT AND RSA      I272 01420019
         MVC    LCTPARM1(X16),X0(R3) MOVE LCT PARMS INTO LCT         I272 01430019
```

```
          FREEMAIN R,LV=24,A=(11),SP=TCORE FREE SYSPARM AND TS INFO I272 01440019
          XC    X16(X4,R2),X16(R2) ZERO PARM PTR                   I272 01450019
          ST    R6,12(R2)          STORE LCT ADDRESS IN PARM LIST  I272 01460019
SD104005  EQU   *                                                        01600000
          LR    R1,R2                RESTORE PARAMETER LIST ADDRESS      02300000
          L     R15,SD64VCON         ADDRESS OF IEFSD064                 02320000
          BR    R15                  GO TO IEFSD064                      02340000
SD64VCON  DC    V(IEFSD064)                                              02380000
SD514RD   DC    V(IEFSD514)                                        I272 02400019
ASD062    DC    V(IEFSD062)
R0        EQU   0                                                        02500000
R1        EQU   1                                                        02520000
R2        EQU   2                                                        02540000
R3        EQU   3                                                        02560000
R4        EQU   4                                                        02580000
R5        EQU   5                                                        02600000
R6        EQU   6                                                        02620000
R7        EQU   7                                                        02640000
R8        EQU   8                                                        02660000
R9        EQU   9                                                        02680000
R10       EQU   10                                                       02700000
R11       EQU   11                                                       02720000
R12       EQU   12                                                       02740000
R13       EQU   13                                                       02760000
R14       EQU   14                                                       02780000
R15       EQU   15                                                       02800000
X0        EQU   0                                                    I272 02802019
X1        EQU   1                                                    I272 02803019
X4        EQU   4                                                    I272 02804019
X3        EQU   3                                                    M2696 02804619
X7        EQU   7                                                    M2696 02805219
X8        EQU   8                                                    I272 02806019
X12       EQU   12                                                   I272 02808019
X16       EQU   16                                                   I272 02810019
X20       EQU   20                                                   M2696 02811019
X24       EQU   24                                                   I272 02812019
X32       EQU   32                                                   I272 02814019
X36       EQU   36                                                   I272 02815019
X104      EQU   104                                                  I272 02816019
TCORE     EQU   253                                                  I272 02818019
DISPLACE  EQU   760
          EJECT                                                      I272 02818319
          IEFWTPCB                                                   I272 02818619
          EJECT                                                      I272 02818919
          IEZJSCB                                                    I272 02819219
          EJECT                                                      I272 02819519
IEFLOT    DSECT                                                            02820000
          IEFALLCT                                                         02840000
          DS    1F                                                   I272 02846019
LCTSOOMP  DS    1F        ADDRESS OF MESSAGE CLASS QUEUE             I272 02852019
*                         MANAGER PARAMETER AREA                     I272 02858019
          DS    8F                                                   I272 02864019
REGSAVE   DS    36F                                                  I272 02870019
OMGR1     DS    9F            MAIN OMGR PARAMETER AREA                     02880000
OMGR2     DS    9F            'ALTERNATE' OMGR PARAMETER AREA              02900000
OMCAP     EQU   OMGR1+24  PTR IN OMPA TO TRK STACK INFO                     02920000
TRSTKINF  DS    2F        NEEDED FOR TRACK STACKING AND QUEUE              02940000
```

```
*                                   BREAK INFORMATION.  1ST BYTE TO CON-    02960000
*                                   TAIN  NUMBER OF BUFFERS, NEXT 3 BYTES   02980000
*                                   FOR STACK ADDR, NEXT 4 BYTES FOR        03000000
*                                   QUEUE BREAK INFORMATION                 03020000
OMWTQ1    EQU    OMGR1+24    PTR IN OMPA TO TRACK STACK INFO          I272 03022019
OMWTQ2    EQU    OMGR2+24    PTR IN OMPA TO TRACK STACK INFO          I272 03024019
          DS     8F                                                   I272 03025019
LCTJSCB   DS     F                ADDRESS OF P/P JSCB                 I272 03026019
IEEEND    EQU    *                                                    I272 03028019
          EJECT                                                       I272 03029019
 IEEOMNGR                                                             I272 03030019
          EJECT                                                       I272 03031019
IEECSCB   DSECT                                                       I272 03032019
 IEECHAIN                                                             I272 03034019
          END                                                                03040000
```

```
IEFW42SD CSECT
R0       EQU   0
R1       EQU   1
R2       EQU   2
R3       EQU   3
R4       EQU   4
R5       EQU   5
R6       EQU   6
R7       EQU   7
R8       EQU   8
R9       EQU   9
R10      EQU   10
R11      EQU   11
R12      EQU   12
R13      EQU   13
R14      EQU   14
R15      EQU   15
         ENTRY IEFV4221
         SAVE  (14,12),T
         DS    0H
         BALR  R9,R0
         USING *,R9
         B     FIRST
         DC    X'CCCC'
         DC    CL8'IEFSD420'
         DC    X'05161966'
         DC    X'CCCC'
FIRST    DS    0H
         USING LCT,R12
         L     R12,0(R1)
         LR    R2,R1
         L     R6,LCTQENTY
         SRL   R6,24
         SLL   R6,24
         SLL   R13,8
         SRL   R13,8
         AR    R13,R6
         ST    R13,LCTQENTY
         SR    R3,R3
         L     R15,CVTPTR
         USING CVTDSECT,R15
         L     R10,CVTMSER
         USING BASE,R10
         TM    MSLOGST,MSLOGENQ
         BZ    IEFV4221
         DROP  R10,R15
         L     R0,ENQLOGCR
         GETMAIN R,LV=(0)
         LA    R3,NO(,R1)
         MVC    NO(ENQLOGE,R3),ENQLOG
         USING ENQLOG,R1
         ENQ   (ENQLOGQQ,ENQLOGQR),MF=(E,(1))
         DROP  R1
         LTR   R15,R15
         BNZ   IEFV4221
         LNR   R3,R3
SYSOUT   XCTL  EP=IEFVLDSP
```

```
IEFV4221 EQU    *
         DROP   R9
         BALR   R9,0
         USING  *,R9
         L      R8,ASD062          GET ADDR. OF IEFSD062.
         LA     R8,DISPLACE(R8)    BUMP TO FTT FLAG.
         MVI    0(R8),X'FF'        REMOTE SET.
         USING  LCT,R12
         LTR    R3,R3
         BZ     SECOND
         BP     NOLOG
         LPR    R1,R3
         DEQ    MF=(E,(1))
NOLOG    EQU    *
         L      R0,ENQLOGCR
         LPR    R1,R3
         FREEMAIN R,LV=(0),A=(1)
SECOND   DS     0H
         MVC    LCTJCTAD(4),4(R2)
         MVC    LCTSCTAD(4),8(R2)
         MVC    LCTPARM1(4),12(R2)
         ST     R2,LCTATLST
         L      R5,LCTTCBAD
         USING  TCB,R5
         USING  CVTDSECT,R15
         L      R15,CVTPTR
         TM     CVTDCB,X'20'
         BO     IEFV42H
         XC     TCBTIO(4),TCBTIO
IEFV42H  EQU    *
         L      R3,LCTJCTAD
         USING  IEFJCT,R3
         TM     JCTJSTAT,INCMSTS+JCTJOBFL+JCTABEND+JCTSTPFL
         BZ     RJENDSET
         LA     R3,QMGR2
         USING  IOPARAMS,R3
         OI     QMSTA,RJENDFAL
         DROP   R3
RJENDSET EQU    *
         GETMAIN R,LV=176
         ST     R1,LCTSMBAD
         XC     0(176,R1),0(R1)
         USING  SCT,R2
         L      R2,LCTSCTAD
         L      R10,LCTJCTAD
         USING  IEFJCT,R10
         MVC    0(4,R1),SCTADSMB
         MVI    TTR0(R1),SMBID
TESTWTP  EQU    *
         L      R15,CVTPTR
         USING  CVTDSECT,R15
         TM     CVTDCB,MFT
         DROP   R15
         BO     GOON
         L      R11,LCTJSCB
         B      WTPPTR
GOON     L      R11,TCBJSCB(R5)
```

```
WTPPTR   L      R11,WTPCRPTR(R11)
         LA     R11,HIGHBYTE(R11)
         LTR    R11,R11
         USING  WTPDSECT,R11
         BNZ    TESTWTP1
HOLDON   EQU    *
         TM     SCTSTYPE,X'20'
         BO     IEEV42R
WTPRETN  EQU    *
         L      R13,LCTCMCBA
         USING  IOPARAMS,R1
         LA     R1,LCTOMPAM(R13)
         LA     R4,72(R13)
         MVC    0(4,R4),LCTSMBAD
         LTR    R11,R11
         BZ     NOWTP
         MVC    04(LTR,R4),WTPSMB
         MVI    07(R4),HEXOH
         B      WTPOVER1
NOWTP    EQU    *
         MVC    4(4,R4),SCTADSMB
WTPOVER1 EQU    *
         L      R7,LCTSMBAD
         MVI    OMPOP,X'04'
         ST     R4,OMPCL
         MVI    OMPCM,X'01'
READNEXT EQU    *
         L      R15,IEEV42V1
         BALR   R14,R15
         LTR    R11,R11
         BZ     IEEV42R
         TM     WTPFLGSA,WTPINVKD
         BZ     IEEV42R
         MVI    NEXTBYTE(R7),FULL
IEEV42R  DS     0H
         TM     TCBFLGS,TCBFA
         BC     1,IEEV42S
         TM     JCTRSW2,X'01'
         BZ     IEEV42T
         NI     JCTRSW2,X'FE'
         OI     LCTOENTY,LCTERRM
         MVC    LCTERROR(4),IEEV42C1
IEEV42T  EQU    *
         TM     SCTSSTAT,4
         BO     IEENEXT
         NI     JCTRSW1,255-JCTCKFT
IEENEXT  EQU    *
         L      R15,IEEV42V3
         BR     R15
IEEV42S  DS     0H
         L      R15,IEEV42V4
         BR     R15
TESTWTP1 EQU    *
         TM     WTPFLGSA,WTPINVKD
         BZ     HOLDON
         MVC    SCTCRWTP(04),WTPCRSMB
         B      WTPRETN
```

```
          DROP  R11
*
*         CONSTANTS AND DSECTS.
*
DISPLACE  EQU   760
NEXTSMB   EQU   4
D7        EQU   7
TTRO      EQU   3
TTR       EQU   TTRO
HIGHBYTE  EQU   0
D4        EQU   4
HEXOH     EQU   X'00'
NEXTBYTE  EQU   13
FULL      EQU   X'A1'
WTPCBPTR  EQU   X'FC'
TCBJSCB   EQU   X'B4'
MFT       EQU   X'20'
ASD062    DC    V(IEFSD062)
IEFV42V1  DC    V(IEFQMRAW)
IEFV42V3  DC    V(IEFYN)
IEFV42V4  DC    V(IEFIDUMP)
ENQLOG    ENQ   (,,E,06,SYSTEM),RET=USE,MF=L
ENQLOGQQ  DC    CL8'SYSIEFSD'
ENQLOGQR  DC    CL6'SYSLOG'
ENQLOGE   EQU   *-ENQLOG
          DS    0F
ENQLOGCR  DC    AL1(255)
          DC    AL3(ENQLOGE)
NO        EQU   0
N255      EQU   255
IEFV42C1  DC    C'DSDR'
RJENDFAL  EQU   8
JCTJOBFL  EQU   64
JCTSTPFL  EQU   16
*
TCB       DSECT
          DS    CL12
TCBTIO    DS    CL4
          DS    CL13
TCBFLGS   DS    CL5
TCBFA     EQU   X'80'
          IEFWTPCB
LCT       DSECT
          IEFALLCT
LCTBATMN  DS    F
LCTSOQMP  DS    F
LCTRTRN   DS    F
LCTCSCB   DS    F
LCTTMWRK  DS    4F
LCTJOBLB  DS    F
LCTATLST  DS    F
REGSAVE   DS    36F
QMGR1     DS    9F
QMGR2     DS    9F
IEFEND    EQU   *
LCTJSCB   EQU   LCT+360
SCT       DSECT
```

```
         IEEASCTB
         IEEOMPAM
CVTDSECT DSECT
         CVT
IEEJCT   DSECT
         IEEAJCTB
         IEEBASEA
         END
```

0

```
         TITLE 'IEFSD065 VMS INITIATOR ERROR MODULE'                    00020000
IEFSD065 CSECT                                                          00040000
*2186016700-026300                                                      00050017
*********************************************************************** 00060000
*                                                                     * 00080000
*                          IEFSD065                                   * 00100000
*                  NO ATTACH TERMINATE INTERFACE                      * 00120000
*                                                                     * 00140000
********************************************************************* * 00160000
********************************************************************* * 00180000
*                                                                       00200000
*STATUS: CHANGE LEVEL 000                                               00220000
*                                                                     * 00240000
*FUNCTION:   TO INTERFACE WITH THE TERMINATE ROUTINES WHEN AN ERROR   * 00260000
*          IN ALLOCATE CAUSES THE JOB STEP TO BE NOT ATTACHED.        * 00280000
*                                                                     * 00300000
*ENTRY POINTS: IEFSD065  FROM THE ALLOCATE/ATTACH MODULE IEFSD062     * 00320000
*                                                                     * 00340000
*INPUT:      REG 1 POINTING TO A PARAMETER LIST CONTAINING POINTERS   * 00360000
*                                  TO-***********************         * 00380000
*                                            *   LCT     *            * 00400000
*                                            ************            * 00420000
*                                            *   JCT     *            * 00440000
*                                            ************            * 00460000
*                                            *   SCT     *            * 00480000
*                                            ************            * 00500000
*                                            * TIOTLIST *            * 00520000
*                                            ************            * 00540000
*                                            *    0      *            * 00560000
*                                            ************            * 00580000
*                                                                     * 00600000
*OUTPUT: REG 1 POINTING TO LCT                                          00620000
*                                                                       00640000
*EXTERNAL ROUTINES: IEFOMRAW - Q MNGR READ/WRITE ROUTINE                00660000
*                   IEFW42SD - TERMINATE                                00680000
*                                                                     * 00700000
*TABLES AND WORK AREAS: LCT-TCB                                       * 00720000
*                                                                     * 00740000
*EXITS  IEFSD162 - IF MORE STEPS TO BE RUN                         CR17 00750017
*EXITS  IEFSD166 - IF END OF JOB                                   CR17 00760017
*EXITS  IEFSD168 - IF JOB IS TO BE SUSPENDED                       CR17 00770017
*                                                                     * 00800000
*ERROR MESSAGES:  NONE                                                * 00820000
*                                                                       00840000
*ATTRIBUTES: REENTRANT                                                  00860000
*                                                                       00880000
*                                                                     * 00900000
********************************************************************** 00920000
********************************************************************** 00940000
*                                                                     * 00960000
         EJECT                                                          00980000
         BALR  12,0                                                     01000000
         USING *,12                                                     01020000
         USING IEFLOT,R11                                               01040000
********************************************************************** 01060000
*        THE FOLLOWING CODE SERVES ONLY TO MAKE THIS MODULE EASIER    * 01080000
*        TO IDENTIFY IN A DUMP LISTING.                               * 01100000
```

```
*********************************************************************** 01120000
         B      FIRST                                                   01140000
         DC     X'CCCC'                                                 01160000
         DC     C'IEFSD165'                                             01180000
         DC     X'05031966'                                             01200000
         DC     X'CCCC'                                                 01220000
FIRST    DS     0H                                                      01240000
*********************************************************************** 01260000
*        SETUP TO BUILD DUMMY TCB TO SATISFY REQUIREMENTS TO ENTER     * 01280000
*        TERMINATE.                                                    * 01300000
*********************************************************************** 01320000
         LR     R3,R1                    SAVE POINTER TO PARAMETER LIST  01340000
*                                        BUILT BY SD062                * 01360000
         L      R11,0(R3)            LOAD LCT BASE                 241 01362018
         SR     R1,R1                CLEAR REG                     241 01364018
         IC     R1,LCTQDRTY          GET JOB PRIORITY              241 01366018
         LA     R0,15                PUT 15 IN REG                 241 01368018
         SR     R0,R1                GET 15-PRTY                   241 01370018
         CHAP   (0)                  CHAP INIT UP TO UNSHADED PRTY 241 01372018
         LA     R1,TCORE             SUBPOOL                      I272 01376019
         SLL    R1,D24               SUBPOOL IN HIGH-ORDER BYTE   I272 01380019
         LA     R0,TCBLEN            LENGTH OF TCB                I272 01384019
         OR     R0,R1                SUBPOOL IN HIGH-ORDER BYTE   I272 01388019
         GETMAIN    R,LV=(0)         GET CORE FOR DUMMY TCB       I272 01392019
         XC     ZERO(TCBLEN,R1),ZERO(R1) ZERO DUMMY TCB            M4340 01422019
         ST     R1,LCTTCBAD              STORE POINTER TO DUMMY TCB IN  01460000
*                                        LCT                           * 01480000
TCBTCT   EQU    164                                                 SMF1 01482018
         L      R4,LCTQDRTY              PT TO CSCB                  SMF1 01484018
         USING  IEFCSCB,R4                                           SMF1 01486018
         L      R4,CHSWT                 NOW PT TO TCB               SMF1 01488018
         MVC    TCBJSCB+D1(D3,R1),LCTJSCB+D1  ADDR JSCB TO TERM    M4340 01489019
         DROP   R4                                                       01490018
         MVC    TCBTCT(4,R1),TCBTCT(R4)  COPY TCT PTR TO FAKE TCB   SMF1 01492018
*********************************************************************** 01500000
*        SETUP TO GETCORE FOR REGSAVE AREA AND BRANCH TO TERMINATE     * 01520000
*        AFTER RESTORING REG 1 TO POINT TO PARAMETER LIST BUILT BY     * 01540000
*        SD062.                                                        * 01560000
*********************************************************************** 01580000
         LR     R6,R1                SAVE ADDR DUMMY TCB           M4340 01590019
         USING IEFSCT,R5                                             CR17 01610017
         USING IEFCSCB,R7                                            CR17 01620017
         USING IOPARAMS,R10                                          CR17 01630017
         L      R5,LCTSCTAD               SCT BASE.                  CR17 01640017
         L      R7,LCTQDRTY               CSCB BASE.                 CR17 01650017
         LA     R10,QMGR1                 QMPA BASE.                 CR17 01660017
SD65005  EQU    *                                                       02640000
         GETMAIN  R,LV=72,SP=TCORE                                       02660000
         LR     R13,R1                                                  02680000
         LR     R1,R3                    RESTORE PARAM LIST POINTER     02700000
         L      R15,SD42VCON              ADDRESS OF TERMINATE          02720000
         BALR   R14,R15                   GO TO TERMINATE               02740000
*********************************************************************** 02760000
*        UPON RETURN FROM TERMINATE- SETUP TO FREECORE  FOR THE DUMMY * 02780000
*        TCB. TERMINATE RETURNS A CODE IN REGISTER 15 TO DENOTE IF JOB* 02800000
*        TERMINATE WAS ENTERED OR NOT. 0= NOT ENTERED- 4= ENTERED      * 02820000
*********************************************************************** 02840000
```

```
         LR    R7,R15                    SAVE RETURN CODE                  02860000
         LR    R1,R3                      ADDRESS OF PARAMETER LIST        02880000
         FREEMAIN  R,LV=24,A=(1),SP=TCORE                                  02900000
         LA    R1,TCORE            SUBPOOL                          1272 02904019
         SLL   R1,024              SUBPOOL IN HIGH-ORDER BYTE       1272 02908019
         LA    R0,TCBLEN           LENGTH OF TCB                    1272 02912019
         OR    R0,R1               SUBPOOL IN HIGH-ORDER BYTE       1272 02916019
         LR    R1,R6               RESTORE ADDR DUMMY TCB          M4340 02926019
         FREEMAIN   R,LV=(0),A=(1) FREE DUMMY TCB                   1272 02940019
         LR    R1,R13                   RESTORE POINTER TO REG SAVE AREA 02960000
         FREEMAIN  R,LV=72,A=(1),SP=TCORE                                  02980000
         LA    R15,4                                                  CR17 03000017
         CR    R7,R15                     IS THIS JOB TERMINATION.     CR17 03020017
         BNE   SD65226             NO.                                CR17 03040017
*                                  YES, JOB TERMINATION              M4340 03042019
         L     R1,LCTJSCB          ADDR EXEC PGM JSCB                M4340 03044019
         USING IEZJSCB,R1          JSCB ADDRESSABILITY               M4340 03046019
         L     R1,JSCBWTP          ADDR WTPCB                        M4340 03048019
         DROP  R1                                                    M4340 03050019
         LA    R1,ZERO(R1)         CLEAR HIGH-ORDER BYTE             M4340 03052019
         USING WTPCB,R1            WTPCB ADDRESSABILITY              M4340 03054019
         XC    WTPSMB(WTPCBSIZ),WTPSMB        ZERO WTPCB             M4340 03056019
         DROP  R1                                                    M4340 03058019
         LR    R1,R11                     YES.                       CR17 03060017
         L     R15,SD66VCON                                          CR17 03080017
         BR    R15                        GO TO IEESD166             CR17 03100017
SD65226  EQU   *                                                     CR17 03120017
         L     R1,LCTJSCB          ADDR EXEC PGM JSCB                M4340 03121019
         USING IEZJSCB,R1          JSCB ADDRESSABILITY               M4340 03122019
         L     R1,JSCBWTP          ADDR EXEC PGM WTPCB               M4340 03123019
         DROP  R1                                                    M4340 03124019
         LA    R1,ZERO(R1)         CLEAR HIGH-ORDER BYTE             M4340 03125019
         USING WTPCB,R1            WTPCB ADDRESSABILITY              M4340 03126019
         XC    WTPSMB,WTPSMB       ZERO WTPSMB SLOT                  M4340 03127019
         NI    WTPFLGSA,WTPCLEAN   TURN OFF ALL STEP FLAGS           M4340 03128019
         XC    WTPBYTES(D8),WTPBYTES     ZERO 2 WORDS IN WTPCB       M4340 03129019
         DROP  R1                                                    M4340 03130019
         LA    R1,REGSAVE+72              YES.OMGR REMOTE AREA.      CR17 03140017
         ST    R5,0(0,R1)                 SCT CORE ADDRESS TO REMOTE AREA 03240000
         MVC   4(4,R1),SCTANSCT           SCT TTR TO REMOTE AREA          03260000
         ST    R1,OMPCL                   REMOTE AREA TO OMPAM            03280000
         MVI   OMPOP,4                    INDICATE READ OPERATION         03300000
         MVI   OMPCL,1                    INDICATE 1 OPERATION            03320000
         LA    R13,REGSAVE                REGISTER SAVE AREA              03340000
         L     R15,OMVCON                 ADDRESS OF O MGR                03360000
         LR    R1,R10                     ADDRESS OF PARM AREA            03380000
         BALR  R14,R15                    GO TO READ IN SCT               03400000
         B     SD65020(R15)               CHECK RETURN CODE               03420000
SD65020  B     SD65030                    RETURN CODE OK                  03440000
         BC    0,SD65020                  NO WORK, IMPOSSIBLE ON READ     03460000
         BC    0,SD65020                  NO SPACE, IMPOSSIBLE ON READ    03480000
*****************************  I/O ERROR                                  03500000
*****************************   CODE TO PROCESS THIS CONDITION            03520000
         LA    R1,X'0B0'       SHOULD BE PLACED HERE                     03540000
         SLL   R1,12           TEMPORARILY, ABEND                        03560000
         ABEND  (1),DUMP                                                 03580000
*****************************                                            03600000
```

```
SD65030  EQU   *                                                        03620000
         IC    R1,LCTSNUMB              UPDATE                          03640000
         LA    R1,1(0,R1)               STEP                            03660000
         STC   R1,LCTSNUMB              NUMBER IN LCT                   03680000
*********************************************************************** 03700000
*                                                                     * 03720000
* LCTPARM1 IS TESTED IN IEFSD102 FOR DATA SET ENQUEUEING,AND MUST BE  * 03740000
* SET TO ZERO BEFORE EXITING IEFSD165 TO IEFSD101.                    * 03760000
*                                                                     * 03780000
         XC    LCTPARM1,LCTPARM1                                       03800000
*                                                                     * 03820000
*********************************************************************** 03840000
         L     R15,SD62VCON        GET ADDRESS OF IEFSD062.
         LA    R15,DISPLACE(R15)   BUMP IT TO FTT FLAG.
         MVI   0(R15),X'FF'        SET THE FLAG.
         LR    R1,R11                   LCT ADDRESS TO R1               03860000
         L     R15,SD62VCON                                             03880000
         BR    R15                      BRANCH TO SD062 TO ALLOCATE FOR 03900000
*                                       AND ATTACH ANOTHER JOB STEP   * 03920000
SD68VCON DC    V(IEFSD068)                                        CR17 03926017
         EJECT                                                          03932017
SD66VCON DC    V(IEFSD066)                                              03940000
SD62VCON DC    V(IEFSD062)                                              03960000
QMVCON   DC    V(IEFQMRAW)                                              03980000
SD42VCON DC    V(IEFW42SD)                                              04000000
DISPLACE EQU   760
TCORE    EQU   253                                                      04020000
TIOTPTR  EQU   12                       DISPLACEMENT OF TIOT PTR IN TCB 04040000
TCBFLGS  EQU   29                                                  CR17 04050017
TCBLEN   EQU   184                 LENGTH OF TCB                   I272 04052019
TCBJSCB  EQU   180                 JSCB DISPLACEMENT IN TCB        I254 04054019
ZERO     EQU   0                   DISPLACEMENT                   M4340 04054519
D1       EQU   1                   DISPLACEMENT                   M4340 04055019
D3       EQU   3                   DISPLACEMENT                   M4340 04055519
D4       EQU   4                   DISPLACEMENT                    I254 04056019
D8       EQU   8                   DISPLACEMENT                   M4340 04057019
D24      EQU   24                  DISPLACEMENT                    I272 04058019
*********************************************************************** 04060000
*                     REGISTER EQUATE STATEMENTS                      * 04080000
*********************************************************************** 04100000
R0       EQU   0                                                        04120000
R1       EQU   1                                                        04140000
R2       EQU   2                                                        04160000
R3       EQU   3                                                        04180000
R4       EQU   4                                                        04200000
R5       EQU   5                                                        04220000
R6       EQU   6                                                        04240000
R7       EQU   7                                                        04260000
R8       EQU   8                                                        04280000
R9       EQU   9                                                        04300000
R10      EQU   10                                                       04320000
R11      EQU   11                                                       04340000
R12      EQU   12                                                       04360000
R13      EQU   13                                                       04380000
R14      EQU   14                                                       04400000
R15      EQU   15                                                       04420000
         EJECT                                                          04430017
```

```
IEFCSCB  DSECT                                                          04440000
         IEECHAIN                                                       04460000
         EJECT                                                          04470017
IHADCB   DSECT                                                          04480000
DCBSTART EQU   *                                                        04500000
         DCB   DSORG=PO,MACRF=E                                         04520000
IEFXLIST DC    F'0'                        DCB EXIT LIST                04540000
DCBEND   EQU   *                                                        04560000
         EJECT                                                          04580000
IEFSCT   DSECT                                                          04600000
   IEFASCTB                                                             04620000
         EJECT                                                          04630017
   IEFQMNGR                                                             04640000
QMOSC    EQU   QMTID+2                                            CR17 04650017
IEFLOT   DSECT                                                          04660000
*********************************************************************** 04680000
*                                                                     * 04700000
*        THE FOLLOWING REPRESENTS A BLOCK OF MAIN STORAGE WHICH IS    * 04720000
*        ALLOCATED FOR THE LIFE OF                                    * 04740000
*        OF THIS INITIATOR.  IT CONTAINS:                             * 04760000
*                                                                     * 04780000
*              (1)  THE LCT (LINKAGE CONTROL TABLE)                   * 04800000
*              (2)  A 2 LEVEL REGISTER SAVE AREA FOLLOWED BY THE      * 04820000
*                   THE QUEUE MANAGER PARAMETER AREA                  * 04840000
*              (3)  AN ALTERNATE QUEUE MANAGER PARAMETER AREA         * 04860000
*                                                                     * 04880000
*********************************************************************** 04900000
  IEFALLCT                                                              04920000
LCTBATMN DS    F  *****TO BE ADDED TO LCT                               04940000
LCTSOQMP DS    F  *****TO BE ADDED TO LCT(VMS ONLY)  POINTER TO         04960000
*                     SYSOUT QUEUE MANAGER PARAMETER AREA               04980000
LCTRTRN  DS    F  *****TO BE ADDED TO LCT(VMS ONLY) INITIATOR'S         05000000
*                     RETURN POINT                                      05020000
LCTCSCB  DS    F  *****TO BE ADDED TO LCT(VMS ONLY) INITIATOR CSCB      05040000
*                     ADDRESS                                           05060000
LCTTMWRK DS    4F *****TO BE ADDED TO LCT(VMS ONLY) TIMER WORK AREA     05080000
LCTJOBLB DS    F  *****TO BE ADDED TO LCT(VMS ONLY) JOBLIB DCB PTR      05100000
LCTATLST DS    F  *****TO BE ADDED TO LCT(VMS ONLY)  POINTER TO         05120000
*                     ALLOCATE/TERMINATE PARAMETER LISTS                05140000
REGSAVE  DS    36F                      ALLOCATE/TERMINATE REGSAVE AREA 05160000
QMGR1    DS    9F                       QUEUE MANAGER PARAMETER AREA    05180000
QMGR2    DS    9F                       ALTERNATE QUEUE MANAGER AREA    05200000
         DS    8F                   TO CORRECT DISPLACEMENT        M4340 05201019
*   THESE FIELDS ARE NEEDED FOR L-SHAPE/INIT MERGE              *   I272 05202019
         DS    0F                                                  I272 05203019
LCTOPSW1 DS    0C                   INITIATOR OPTIONS BYTE 1       I272 05204019
LCTPKEYF EQU   128                  DONT GET PROTECT KEY           I272 05205019
LCTDWFF  EQU   64                   DONT PROCESS DEDICATED WORKF   I272 05206019
LCTSTMDF EQU   32                   DONT PROCESS STOP/MODIFY       I272 05207019
LCTMINPF EQU   16                   GET REGION SIZE SPECIFIED      I272 05208019
LCTCANF  EQU   8                    ALLOW CANCEL ONLY AT ALLOC     I272 05209019
LCTONEJF EQU   4                    PROCESS ONLY ONE JOB           I272 05210019
LCTICMDF EQU   2                    DONT PROCESS INITIATOR CMDS    I272 05211019
LCTEXIT  DS    F                    ADDRESS INITIATOR EXIT LIST    I272 05212019
LCTOPSW2 DS    0C                   INITIATOR OPTIONS BYTE 2       I272 05213019
LCTTIMEF EQU   128                  DONT TIME THIS JOB             I272 05214019
LCTCRF   EQU   64                   DONT ALLOW CHECKPT/RESTART     I272 05215019
```

```
LCTDSOF  EQU   32                  DOMT PROCESS DSO                    I272 05216019
LCTCOM   DS    F                   COMMUNICATIONS PARM AREA PTR        I272 05217019
LCTJSCB  DS    F                   ADDRESS OF JSCB FOR NEW TASK        I254 05218019
IEEEND   EQU   *                        END OF LIFE-OF-TASK BLOCK           05220000
         IEZJSCB                                                            05226019
WTPPTR   EQU   JSCBWTP-IEZJSCB     DISPLACEMENT OF WTP PTR             I254 05232019
         IEEWTPCB                                                     M4340 05234019
WTPCLEAN EQU   X'4C'                                                  M4340 05236019
         EJECT                                                              05240000
         END                                                                05260000
                                                                            0
```

```
         TITLE 'IEFSD162 VMS INITIATOR STEP PROCESSOR'                  00020000
IEFCVT   DSECT                                                          00040000
         CVT                                                            00060000
         EJECT                                                          00070017
IEFSD062 CSECT                                                          00080000
*  055610-055630,055700,055805,059400,063110,082750              A29871 00080119
*                                                                M3166 00080219
*   066390-066550                                               A27679 00080519
* 069800-070200,070800                                           M2434 00081018
         ENTRY IEFSD62A                                           CR17 00082017
* 059000-060600,063260-063740,083000-083200,086200              A16531 00083018
*2056043971                                                     PTM663 00085016
*0059                                                             1404 00090014
*1785043669,043687,068200,068400,069600,070800,083800            18428 00092017
*0642                                                             MT50 00095016
*011400,044400-045400,045800,051190,063800,066600,072620,074800-   I272 00095319
*076800,08100-081600,084000,085660-085720,090800-091000            I272 00095619
*016400,017600,027200-029600,029610-029630,029800-030200803100O    I272 00095919
*036500,043414-043597,043633-043642,080400,099200-099400           I272 00096219
*029800803112O,031200-031405,031420,031420,031490-031500            099 00096519
* 030890-030917,030935-031023,031502                            M4012 00096719
*2229056500-056700                                              17464 00097017
*2842                                                         PTM17052 00098017
*                                                               M4137 00099018
* 031293-031294                                                 M3164 00099219
*                                                               M4373 00099519
* 030926-031261                                                 M2945 00099719
*********************************************************************** 00100000
*                                                                     * 00120000
*              VMS ALLOCATE ENTRANCE/ATTACH INTERFACE MODULE          * 00140000
*                                                                     * 00160000
*********************************************************************** 00180000
*                                                                     * 00200000
* STATUS-       CHANGE LEVEL - 0                                      * 00220000
* FUNCTION: 1. COMPLETE ENTRANCE INTERFACE FOR ALLOCATE               * 00240000
*           1A.ENTRANCE INTERFACE FOR TIOT WRITE (IEFSD514) ROUTIN CR17 00250017
*           1B.UPDATE THE CSCB - SCAN THE SIOT FOR IEFRDER IF TASK I272 00252019
*              NAME IS 'STARTING'  - SCAN THE TIOT ON RETURN       I272 00254019
*              FROM ALLOCATION FOR IEFRDER.                             00256019
*           2. DETERMINE (BY ALLOCATE EXIT PARAMETER) WHETHER OR NOT  * 00260000
*              STEP SHOULD BE ATTACHED. IF SO,BUILD AN ATTACH         * 00280000
*              PARAMETER LIST FOR ATTACH.  IF NOT, PASS THE ALLOCATE  * 00300000
*              EXIT PARAMETER LIST TO IEFSD165                        * 00320000
*           3. IF OPEN JOBLIB OR OPEN FETCH DATASET FAILS, ATTACH     * 00340000
*              IEFSDOXX INSTEAD OF THE USERS JOB STEP. THIS WILL      * 00360000
*              FAIL ON THE OPEN AGAIN AND ABEND THE JOB STEP.         * 00380000
*           4. CONDITIONALLY LINK TO IEFDSOWR TO WRITE JOB          099 00385019
*              SEPARATORS AND/OR SYSTEM MESSAGES (SMB'S)            099 00390019
*              FOR DIRECT SYSOUT DATA SETS.                         099 00395019
*                                                                     * 00400000
*  ENTRY POINT:  IEFSD162 FROM IEFSD161, IEFSD164, AND IEFSD165.      * 00420000
*                IEFSD62A FROM IEFSD164 FOR IMMEDIATE RESTART      CR17 00430017
*                                                                     * 00440000
*  INPUT:  1.  LCT POINTED TO BY REGISTER ONE                         * 00460000
*          2. LPMOD VALUE IN 1ST BYTE OF LCTODRTY                     * 00480000
*          3. IF THE ENTRY IS TO IEFSD62A,REGISTER 1 POINTS TO TH CR17 00481017
*             PARAMETER LIST THAT CONTAINS-                        CR17 00482017
```

```
*                                          *************          CR17 00483017
*                                          *    LCT    *          CR17 00484017
*                                          *************          CR17 00485017
*                                          *    JCT    *          CR17 00486017
*                                          *************          CR17 00487017
*                                          *    SCT    *          CR17 00488017
*                                          *************          CR17 00489017
*                                          * TIOT LIST *          CR17 00490017
*                                          *************          CR17 00491017
*                                                                     * 00500000
* OUTPUT:    1. IF ALLOCATE EXIT PARAMETER INDICATES BYPASS ATTACH,    * 00520000
*               R1 POINTS TO*************************************** 00540000
*                                          * LCT POINTER          * 00560000
*                                          ********************** 00580000
*                                          * JCT POINTER          * 00600000
*                                          ********************** 00620000
*                                          * SCT POINTER          * 00640000
*                                          ********************** 00660000
*                                          * TIOTLIST POINTER     * 00680000
*                                          ********************** 00700000
*                                          * ZERO                 * 00720000
*                                          ********************** 00740000
*             2. IF ALLOCATE EXIT PARAMETER INDICATES ATTACH,         * 00760000
*                R1 POINTS TO*************************************** 00780000
*                                  * USER PARAMS POINTER            * 00800000
*                                  ********************************** 00820000
*                                  * ECB LIST ADDRESS               * 00840000
*                                  ********************************** 00860000
*                                  * SUPERVISOR LIST ADDRESS        * 00880000
*                                  ********************************** 00900000
*                                  * LCT ADDRESS                    * 00920000
*                                  ********************************** 00940000
*                                  * INITIATOR TCB ADDRESS          * 00960000
*                                  ********************************** 00980000
*                                  * TIOT ADDRESS                   * 01000000
*                                  ********************************** 01020000
*                                  * DCB ADDRESS                  I270 01026019
*                                  ***************************      I270 01032019
* EXTERNAL ROUTINES-      IEFW21SD,IEFOMRAW,IEFSD514                CR17 01040017
*                         IEFDSDWR                                   099 01050019
*                                                                     * 01060000
* EXITS-        IEFSD163  (ATTACH JOB STEP)                           * 01080000
*               IEFSD165  (DO NOT ATTACH JOB STEP)                    * 01100000
*               IEFSD161 (JOB SELECT)                                 099 01110019
*                                                                     * 01120000
* TABLES/WORK AREAS  LCT,JCT,SCT,CSCB,SIOT,TIOT,GWT                  I272 01140019
*                                                                     * 01160000
* ATTRIBUTES-  READ ONLY AND REENTRANT                                * 01180000
*                                                                     * 01200000
********************************************************************** 01220000
         EJECT                                                         01240000
R0       EQU   0                                                       01260000
R1       EQU   1                                                       01280000
R2       EQU   2                                                       01300000
R3       EQU   3                                                       01320000
R4       EQU   4                                                       01340000
R5       EQU   5                                                       01360000
```

```
R6       EQU   6                                                        01380000
R7       EQU   7                                                        01400000
R8       EQU   8                                                        01420000
R9       EQU   9                                                        01440000
R10      EQU   10                                                       01460000
R11      EQU   11                                                       01480000
R12      EQU   12                                                       01500000
R13      EQU   13                                                       01520000
R14      EQU   14                                                       01540000
R15      EQU   15                                                       01560000
         EJECT                                                          01580000
         BALR  R12,0                                                    01600000
         USING IEFPARAM,R11                                             01620000
         USING IOPARAMS,R9                                              01660000
         USING  IEFLOT,R8                                               01680000
         USING IEFJCT,R7                                                01700000
         USING IEFSCT,R6                                                01720000
         USING IEFCSCB,R5                                               01740000
         USING *,R12                                                    01780000
         B     FIRST                                              CR17 01781017
IEFSD62A BALR  R12,0                                              CR17 01782017
         LA    R11,IEFSD62A-IEFSD062                              CR17 01783017
         SR    R12,R11                 INITIALIZE BASE REG.12     CR17 01784017
         L     R8,0(R1)                LCT  - BASE REG.           CR17 01785017
         L     R7,4(R1)                JCT  - BASE REG.           CR17 01786017
         L     R6,8(R1)                SCT  - BASE REG.           CR17 01787017
         LR    R2,R1                   PARAM LIST ADDR.(APL')     CR17 01787219
         LA    R9,OMGR1                ADDR OF OMPA               CR17 01787419
         L     R1,CVTPTR          POINTER TO CVT                  I272 01787619
         USING IEFCVT,R1                                           I272 01787819
         L     R1,CVTTCBP         POINTER TO NEW/OLD TCB          I272 01788019
         DROP  R1                                                  I272 01788219
         L     R1,X4(R1)          ADDRESS OF CURRENT TCB          I272 01788419
         ST    R1,LCTTCBAD        STORE TCB ADDRESS IN LCT        I272 01788619
         L     R3,TCBJSCB(R1)     ADDRESS OF INIT JSCB            I272 01788819
         L     R0,LCTJSCB         ADDRESS OF JOB STEP JSCB        I272 01789019
         ST    R3,LCTJSCB         PUT JOB STEP JSCB IN INIT TCB   I272 01789219
         ST    R0,TCBJSCB(R1)     FOR REFERENCE BY OPEN           I272 01789419
         XC    LCTPARM4(4),LCTPARM4     ZERO OUT LCTPARM4 FOR REGI CR17 01790017
         B     SD062030                                           CR17 01791017
         EJECT                                                          01800000
*********************************************************************** 01820000
*                                                                     * 01840000
*  THIS  SECTION OF CODE IS FOR PROVIDING A METHOD OF IDENTIFYING     * 01860000
*                 THIS MODULE IN A MEMORY DUMP                        * 01880000
*                                                                     * 01900000
         DC    X'CCCC'                 EYE-CATCHER                      01940000
         DC    C'IEFSD162'                                              01960000
         DC    X'05031966'                                              01980000
         DC    X'CCCC'                 EYE-CATCHER                      02000000
FIRST    DS    0H                                                       02020000
*                                                                     * 02040000
*********************************************************************** 02060000
         EJECT                                                          02080000
*********************************************************************** 02100000
*                                                                     * 02120000
*  THE FOLLOWING SECTION OF CODE BRANCHES TO THE ALLOCATE SUBROUTINE  * 02140000
```

```
*  AND,UPON ALLOCATE'S RETURN, CHECKS A RETURN CODE IN R15. IF R15 IS *  02160000
*  ZERO, PROCESSING CONTINUES NORMALLY. IF R15 IS NOT ZERO, THE       *  02180000
*  ATTACH MODULE (IEFSD063) IS BYPASSED                               *  02200000
*  LINKING TO IEFDSDDR IS ALSO PERFORMED TO HANDLE WRITING JOB        099 02206019
*  SEPARATORS AND SMRTS IF DIRECT SYSOUT (DSO) IS ACTIVE FOR JOB      099 02212019
*                                                                     *  02220000
************************************************************************ 02240000
*                                                                     *  02260000
         LR    R8,R1                  ADDRESS OF LCT                     02280000
         L     R6,LCTSCTAD            ADDR OF SCT.                    CR17 02480017
         L     R7,LCTJCTAD         JCT ADDRESS FROM LCT               I272 02580019
         LA    R9,OMGR1               LOAD ADDR OF OMGR PARAM AREA       02585019
         L     R3,OMCAP               PTR TO TRK STACK INFO              02590019
         SR    R5,R5                                                     02595019
         IC    R5,0(R3)               LOAD NO. OF BUFFERS IN STACK       02600019
         LTR   R5,R5                  IF IT IS ZERO,                     02605019
         BC    8,IEFSD022             BRANCH AROUND                      02610019
         GETMAIN R,LV=72              GET CORE FOR REG SAVE AREA         02615019
         LR    R13,R1                 LOAD ITS ADDR INTO REG             02620019
         LA    R1,OMGR1               PTR TO MAIN OMPA                   02625019
         L     R15,IEFSDSTI           ADDR OF STACK INIT. RTN            02630019
         BALR  R14,R15                GO GET STACK                       02635019
*                                                                        02640019
IEFSD022 EQU   *                                                        02645019
         L     R5,LCTQDRTY         ADDRESS OF CSCB                    I272 02650019
         TM    CHSWT,CHSYS         TEST FOR SYSTEM TASK               I272 02655019
         BZ    IEFSD024            BRANCH NOT SYSTEM TASK             I272 02660019
         CLC   SCTSCLPC(X8),ACSTARTG  TASKNAME ON COMMAND             I272 02665019
         BNE   SKIPSCAN            TASK SPECIFIED SKIP SCAN           I272 02670019
         LA    R0,X256             GET CORE  8 BYTES FOR PARM.        I272 02675019
         GETMAIN  R,LV=(0)         176 BYTES FOR READ AREA, 72 RSA    I272 02680019
         LR    R3,R1               ADDRESS OFEXTERNAL LIST            I272 02685019
         LA    R10,X8(R3)           ADDRESS OF READ IN AREA           I272 02690019
         LA    R13,X184(R3)        ADDRESS OF REG SAVE AREA                02695019
         USING SIOT,R10            TEMP SIOT BASE                     I272 02700019
         ST    R10,X0(R3)           ADDRESS OF READ IN AREA           I272 02705019
         MVC   X4(X4,R3),SCTFSIOT   TTR OF SIOT FROM SCT              I272 02710019
         CLI   SCTNSIOT,NOSIOTS     ARE THERE ANY SIOTS               I272 02715019
         BE    NODDRDER             BRANCH NO SIOTS                   I272 02720019
         SR    R2,R2               ZERO REGISTER                      I272 02725019
         IC    R2,SCTNSIOT         NUMBER OF SIOTS                    I272 02730019
         ST    R3,OMPCM             PARM LIST                         I272 02735019
         MVI   OMPCM,ONEREC         READ ONE RECORD                   I272 02740019
         MVI   OMPOP,READCODE       READ OP CODE                      I272 02745019
REREAD   L     R15,IEFQMGRV        ADDRESS OF IEFQMRAW                I272 02750019
         LR    R1,R9               ADDRESS OF OMPA                    I272 02755019
         BALR  R14,R15                                                I272 02760019
         LTR   R15,R15             TEST FOR IO ERROR                  I272 02765019
         BNE   SD062015            BRANCH I/O ERROR                   I272 02770019
         CLC   SCTDDNAM(X8),IEFRDER  IS DDNAME IEFRDER                I272 02775019
         BE    DDRDER              BRANCH YES                         I272 02780019
         BCT   R2,NEXTTTR          GET NEXT TTR                       I272 02785019
         B     NODDRDER            IEFRDER NOT FOUND DEFAULT PROC     I272 02790019
NEXTTTR  MVC   X4(X4,R3),SCTPSIOT   TTR OF NEXT TTR IN CHAIN          I272 02795019
         B     REREAD                                                 I272 02800019
NODDRDER MVC   CHKEY(X8),JCTJNAME MOVE PROC TO CSCB AS TASK NAME      I272 02805019
         MVC   SCTSNAME(X8),JCTJNAME  MAKE JOBNAME STEPNAME           I272 02810019
```

```
         B      IEF16205                                          I272 02815019
SKIPSCAN MVC    SCTSNAME(X8),SCTSCLPC  MOVE TASKNAME TO STEP NAME I272 02830019
         MVI    SCTSCLPC,BLANK       INSERT BLANK                 I272 02835019
         MVC    SCTSCLPC+X1(X7),SCTSCLPC  BLANK STEP              I272 02840019
         B      IEFSD024                                          I272 02845019
DDRDER   CLC    SCTUTYPE(X4),BLANKFW  IS UNIT TYPE SPECIFIED      I272 02850019
         BE     NODDRDER             BRANCH ON NO UNIT            I272 02855019
         MVC    SCTSNAME(X8),SCTUTYPE  SAVE UNIT NAME IN SCT      I272 02860019
         MVC    CHKEY(X8),SCTUTYPE  SAVE UNIT WANTED IN CSCB      I272 02865019
IEF16205 EQU    *                                                 I272 02870019
         MVI    SCTSCLPC,BLANK       INSERT BLANK                 I272 02875019
         MVC    SCTSCLPC+X1(X7),SCTSCLPC  BLANK STEP THAT CALLED  I272 02880019
         DROP R10                                                      02885019
         USING IEFTIOT,R10                                        I272 02890019
         OI     LCTINTSW,LCTSTART  SET SWITCH                     I272 02895019
         L      R10,LCTTCBAD       ADDRESS OF INIT'S TCB          I272 02896019
         L      R10,TCBTIO(R10)    ADDRESS OF TIOT                I272 02897019
         MVC    TIOCSTEP(X8),CHKEY TIOT STEP NAME = CHKEY         I272 02898019
         LR     R1,R3              SET UP TO FREE READIN AREA     I272 02900019
         LA R0,X256                LENGTH TO BE FREED             I272 02902019
         FREEMAIN  R,LV=(0),A=(1) FREE CORE                        I272 02905019
IEFSD024 EQU    *                                                 I272 02910019
         L      R2,LCTPARM3          SAVE GWT ADDRESS IN REG      I272 02930019
         CLI    LCTPARM3,X'8'             DID AN ERROR OCCUR IN IEFS LS17 02964017
         BNE    IEF06223                 NO ERROR                  LS17 02965017
         OC     SCTMSADR(4),SCTMSADR     IS THIS A SPECIFIC REQUEST CR17 02966017
         BE     SD162F3                   NON-SPECIFIC             CR17 02967017
         MVI    LCTPARM3,X'4'             ERROR IN SPECIFIC REQUEST CR17 02968017
SD162F3  OI     JCTJSTAT,INCMSTS          TURN ON JOB FAILED BIT   CR17 02969017
IEF06223 EQU    *                                                 CR17 02970017
*                                                                 I272 02970519
* ALLOCATION AND OPEN WILL NEED TO REFERENCE THE JOB STEP'S       I272 02971019
* WRITE TO PROGRAMER CONTROL BLOCK.  THEREFORE THE SUBTASKS       I272 02971519
* JSCB WILL BE IN THE INITIATOR'S TCB.  THE JSCB FOR THE INIT     I272 02972019
* WILL BE KEPT IN THE LCT                                         I272 02972519
         L      R4,LCTTCBAD        ADDRESS OF INIT TCB            I272 02973019
         L      R3,LCTJSCB         JOB STEP JSCB                  I272 02973519
         L      R0,TCBJSCB(R4)     INIT'S JSCB                    I272 02974019
         ST     R3,TCBJSCB(R4)     JOB STEP JSCB IN INIT TCB      I272 02974519
         ST     R0,LCTJSCB         INIT'S JSCB IN LCT             I272 02975019
         LA     R0,X104   GETMAIN SIZE                            099 02976019
         LA     R1,TCORE           LOAD SUBPOOL                   I272 02982019
         SLL    R1,X24             SUBPOOL IN HIGH ORDER BYTE     I272 02988019
         OR     R0,R1              SUBPOOL AND LENGTH             I272 02994019
*                FOLLOWING GETMAIN INCLUDES 8 BYTES FOR A          099 03000019
*                PARAMETER AREA TO BE PASSED TO IEFDSOWR.          099 03006019
*                SAVEAREA IS RE-USED WHEN LINKING TO SAME.         099 03012019
*                                                                  099 03018019
         GETMAIN  R,LV=(0)         72 BYTE SAVE AREA 24 PARM AREA I272 03024019
         LA     R13,X24(R1)        ADDRESS OF SAVE AREA           I272 03030019
         L      R3,LCTJCTAD              JCT ADDRESS FROM LCT          03040000
         ST     R3,4(0,R1)               TO PARAMETER LIST             03060000
         ST     R8,0(0,R1)               LCT ADDRESS TO PAR LST        03080000
         TM     JCTJSTAT,INCMSTS    HAS JOB BEEN PREVIOUSLY FAILED  099 03080919
         BO     DSOOK               YES-DON'T DO ANY DSO PROCESSING 099 03081819
         CLC    SCTPGMNM(EIGHT),RESTART   IS STEP RESTARTING FROM M3150 03082719
*                                   A CHECKPOINT?                   099 03083619
```

```
         BNE   DSOOK                    NO- DON'T DO DSO RESTART CHECK    099 03084519
         TM    JCTRSW2,JCTDSOJB+JCTDSOCR IS DSO RESTART ENVIRONMENT 099 03085419
*                                       CHECK NEEDED?                     099 03086319
         BZ    DSOOK                    NO-BYPASS LINK TO IEFDSOCR        099 03087219
         LINK  EP=IEFDSOCR,MF=(E,(1)) LINK TO IEFDSOCR                    099 03088119
         LTR   R4,R15            IS JOB TO RUN                           M4012 03089119
         BNZ   FREEUP            NO - FREE RESOURCES                     M4012 03090119
*                                YES - GO TO ALLOCATION                  M4012 03091119
         XC    JCTDSOSM(N3),JCTDSOSM  FORCE DSO MSG REBUILD              M2945 03091819
DSOOK    EQU   *                                                          099 03092119
         TM    LCTOPSW1,LCTCANF   TEST FOR CANCELLABLE                   I272 03092419
         BZ    ALLOCATE           BRANCH IF ALREADY CANCELLABLE          I272 03092719
         LR    R3,R1              SAVE PARM REGISTER                     I272 03093019
         ENQ   MF=(E,SYSCMD)      ENQUEUE TO MAKE SYSTEM                 I272 03093319
*                                       TASK CANCELLABLE                 I272 03093619
         LR    R1,R3              RESTORE PARM REGISTER                  I272 03093919
         OI    CHACT,CHCL         SET CANCELABLE BIT                     I272 03094219
ALLOCATE EQU   *                                                          099 03094519
         SR    R4,R4               CLEAR REGISTER FOR SWITCH             099 03094819
         LINK  EP=IEFW21SD,MF=(E,(1))                                     099 03095119
*                                                                         099 03095419
FREEUP   EQU   *                                                          099 03095719
         ST    R2,LCTPARM3         RESTORE SAVED GWT ADDRESS            I272 03096019
         LR    R3,R15                   SAVE RETURN CODE                     03096319
         LR    R2,R1                    SAVE NEW PARAMETER LIST ADDRESS 03096619
         TM    LCTOPSW1,LCTCANF   TEST FOR CANCELABLE TASK              I272 03096919
         BZ    IEFSD005           BRANCH IF CANCELABLE TASK             I272 03097219
         NI    CHACT,X255-CHCL     RESET TO NON-CANCELLABLE             I272 03097519
         DEQ   MF=(E,SYSCMD)      RELEASE                                I272 03097819
IEFSD005 EQU   *                                                         I272 03098119
*                                                                         099 03098419
* CONDITIONALLY LINK TO IEFDSOWR                                          099 03098719
*                                                                         099 03099019
* * * * * * * * * * *                                                     099 03099319
JCTJOBFL EQU   64    BIT-1  JOB FLUSH                                    099 03099619
JCTSTPFL EQU   16    BIT-3  STEP FLUSH                                   099 03099919
* * * * * * * * * * *                                                     099 03100219
*                                                                         099 03100519
         TM    JCTRSW2,JCTDSOJB    ARE THERE ANY DSOCB'S FOR JOB         099 03100819
         BZ    DSOCOMP    NO-BYPASS LINK                                 099 03101119
*                                                                         099 03101419
         CLC   SCTPGMNM,RSTRTCK    IS C/R DSOR PHASE BEING               099 03101719
*                                  ALLOCATTED                            099 03102019
         BE    DSOCOMP    YES - BYPASS LINK                              099 03102319
*                                                                         099 03102619
         OC    JCTDSOSM,JCTDSOSM      WAS FIRST SMB HANDLED              099 03102919
         BNZ   FAILTEST                  YES- BYPASS SMB CONSTRUCTION099 03103219
         GETMAIN R,LV=176                GET CORE FOR READ IN AREA      099 03103519
         ST    R1,N72(,R13)              SAVE POINTER IN EXT PARM       099 03103819
         LA    R1,N72(,R13)              GET POINTER TO EXT PARM AREA099 03104119
         MVC   N4(N3,R1),JCTSMBAD        MOVE IN TTR OF 1ST SMB         099 03104419
         MVI   N7(R1),NO                 ZERO OUT LOW ORDER BYTE        099 03104719
         ST    R1,OMPCL                  EXT PARM AREA TO OMPA          099 03105019
         MVI   OMPOP,OMREAD              INDICATE READ                  099 03105319
OMGRRW   MVI   OMPNC,N1                  OF ONE RECORD                  099 03105619
         LR    R1,R9                    R1 MUST POINT TO OMPA           099 03105919
         L     R15,IEFOMGRV             GO TO O MANAGER                 099 03106219
```

```
         BALR  R14,R15                                          099 03106519
         LTR   R15,R15                 WAS READ OK              099 03106819
         BNZ   SD062015               BRANCH NO THERE WAS ERROR 099 03107119
*                                                               099 03107419
*  N  O  T  E  -  R2,R3,R4,R5,R6,R7,R8 ARE BEING SAVED          099 03107719
*                                                               099 03108019
         STM   R2,R8,NC(R13)          STORE SOME REGISTERS TO   099 03108319
*                                      ALLOW FOR WORK REGISTERS. 099 03108619
         CLI   OMPOP,OMWRTE            EAS WRITE DONE           099 03108919
         BE    SMBOUT                  B-YES.                   099 03109219
         L     R2,OMPCL                GET POINTER TO EXTBARM AREA 099 03109519
         L     R2,NO(R2)               GET POINTER TO SMB       099 03109819
         LA    R2,NO(R2)              CLEAR HI ORDER BYTE       099 03110119
         USING SMBDSKAD,R2                                      099 03110419
         LA    R3,SMBHDR+1        GET  OFFSET TO SMBMESSAGE AREA 099 03110719
         LA    R3,L'DSOMSG(,R3)   GET  INCREMENT FOR R3          099 03111019
         L     R8,CVTPTR               LOCATION OF CVT          099 03111319
         USING  IEFCVT,R8                                       099 03111619
         L     R8,CVTMSER              ADDR OF MAST SCHED DATA AREA099 03111919
         USING BASE,R8                 M/S BASE REG             099 03112219
*                                                               099 03112519
         ENQ   MF=(E,DSOCBNQ)       ENQ ON DSOCB CHAIN           099 03112819
         L     R8,BADSO                FIRST DSOCB ADDR         099 03113119
         USING IEFDSOCB,R8             SET BASE FOR DSOCB       099 03113419
DSOCBLP  LA    R8,NO(R8)               CLEAR HIGH ORDER BYTE    099 03113719
         LTR   R8,R8                   ANY MORE DSOCBS          099 03114019
         BZ    WRTOUT                  NO- BRANCH TO WRITE SMB  099 03114319
         CLC   DSOKEY,JCTJSRNO         IS THIS A SELECTED  DSOCB 099 03114619
         BE    MSGSETUP                YES GO TO SET UP MESSAGE 099 03114919
NXTDSO   L     R8,DSONXT               GET A OF NEXT DSOCB      099 03115219
         B     DSOCBLP                  + GO TO LOOP            099 03115519
MSGSETUP  EQU  *                                                099 03115819
         TM    DSOIND1,DSOCR+DSONOOP   TEST IF DSOCB NOT TO BE ALLC099 03116119
         BNZ   NXTDSO                  IF YES-GET NEXT DSOCB    099 03116419
         MVC   NO(N1,R3),DSOSCLS     MOVE SYSOUT CLASS TO MESSAGE 099 03116719
         MVI   N1(R3),COMMA           AND FOLLOW IT BY COMMA    099 03117019
         LA    R3,N2(R3)               INCREMENT R3 BY 2        099 03117319
         B     NXTDSO                  AND CONTINUE LOOP        099 03117619
WRTOUT   EQU   *                                                099 03117919
         DEQ   MF=(E,DSOCBNQ)       DEQ ON DSOCB CHAIN           099 03118219
         LA    R4,SMBHDR+1            SET UP TO WRITE OUT MESSAGE 099 03118519
         LA    R4,L'DSOMSG(,R4)       SET R4 TO MATCH WITH R3     099 03118819
         CR    R3,R4                  EQUAL MEANS NO MESSAGE      099 03119119
         BE    SMBOUT                 LB NOT TO WRITE MESSAGE     099 03119419
         MVI   NO(R3),NO  ZERO NXT AVAILABLE BYTE INCASE          M2945 03119719
*                       MSG IS BEING REBUILT FROM A RESTART      M2945 03120019
         BCTR  R3,RO                   DECREMENT COUNTER BY 1     099 03126219
         MVI   NO(R3),PERIOD      OVERLAY LAST COMMA WITH PERIOD  099 03126319
         LA    R4,SMBHDR               GET SMB HEADER LENGTH      099 03126419
         SR    R3,R4                   CONVERT R3 TO MSGLNGTH     099 03126519
         STC   R3,SMBMSGLN             + STORE IT IN SMBMSGLNGTH  099 03126619
         LA    R3,N1(,R3)       INCREMENT BY 1 TP GET NEXT AVAIL BT 099 03126719
         STH   R3,SMBNABPT             INDICATE NEXT AVAILABLE BYTE099 03126819
         LA    R3,SMBHDR+1        GET  OFFSET TO SMBMESSAGE AREA  099 03126919
         MVC   NO(L'DSOMSG,R3),DSOMSG MOVE IN MESSAGE HEADER      099 03127019
         MVI   OMPOP,OMWRTE            INDICATE WRITE OPERATION   099 03127119
*                                                               099 03127219
```

```
*  N  O  T  E  -  R2,R3,R4,R5,R6,R7,R8 ARE BEING RESTORED          099 03127319
*                                                                  099 03127419
         LM     R2,R8,NC(R13)            LOAD THE REGS              099 03127519
         B      OMGRRV                                              099 03127619
SMBOUT   EQU    *                                                   099 03127719
         MVC    JCTDSOSM(N3),JCTSMBAD  HAVE 1ST SMB POINTED TO TO   099 03127819
*                                        INDICATE SMB WAS HANDLED.  099 03127919
         L      R1,OMPCL  GET FPA                                   099 03128019
         L      R1,N0(,R1)      GET CORE ADR                        099 03128119
         FREEMAIN R,LV=176,A=(1)                                    099 03128219
*                                                                  099 03128319
*  N  O  T  E  -  R2,R3,R4,R5,R6,R7,R8 ARE BEING RESTORED          099 03128419
*                                                                  099 03128519
         LM     R2,R8,NC(R13)            LOAD THE REGS              099 03128619
         DROP   R2                                                  099 03128719
*                                                                  099 03128819
*  RE-SET LCT BASE                                                 099 03128919
         USING IEFLOT,R8                                            099 03129019
*                                                                  099 03129119
FAILTEST  EQU   *                                                  099 03129219
         TM     JCTJSTAT,JCTJOBFL+JCTSTPFL  HAS JOB/STEP FAILED   M3164 03129319
         BNZ    DSOCOMP   YES-BYPASS LINK                          099 03129519
*                                                                  099 03129619
         LTR    R3,R3     ANY ALLOCATION ERRORS                    099 03129719
         BNZ    DSOCOMP   YES- BYPASS LINK                         099 03129819
*                                                                  099 03129919
         TM     SCTSTAT2,SCTDSOCL   DID IEFDSOAL IN ALLOCATION     099 03130019
*                                   FIND WORK FOR IEFDSOWR         099 03130119
         BZ     DSOCOMP   NO - BYPASS LINK                         099 03130219
*                                                                  099 03130319
*                                LINK TO IEFDSOWR                  099 03130419
*                                                                  099 03130519
         LA     R1,N72(,R13)   GET 8 BYTE PARM AREA                099 03130619
         ST     R8,N0(,R1)     LCT ADR                             099 03130719
         MVC    N4(N4,R1),IEFOMGRV  OMGR ADR                       099 03130819
*                                                                  099 03130919
         LINK   EP=IEFDSOWR,MF=(E,(1))                              099 03131019
*                                                                  099 03131119
*                                                                  099 03131219
* * * RETURN CODES AND SETTING R3                                  099 03131319
*        1. LINK TO IEFDSOWR ETC IS BYPASSED IF ALLOCATION/IEFDSOCR 099 03131419
*           RETURNS A NON-ZERO RETURN CODE.  SEE ABOVE CODE.       099 03131519
*        2. IF ZERO RETURN CODE FROM ALLOCATION THEN -             099 03131619
*            A. IF IEFDSOWR ENCOUNTERS A JOB0 I/O ERROR A          099 03131719
*               RETURN CODE OF 12 WILL BE SENT BACK INDICATING     099 03131819
*               JOB SHOULD BE ABENDED WITH A 'OB0'.  R3 WILL       099 03131919
*               BE MADE NEG IN THIS CASE SO THIS PROG CAN          099 03132019
*               DO FREEMAIN ETC BEFORE ABEND.                      099 03132119
*            B. IF IEFDSOWR ENCOUNTERS A PERMANENT I/O ERROR       099 03132219
*               WHILE WRITING JOB SEPARATORS OR SMB'S TO A         099 03132319
*               DIRECT DEVICE THEN A RETURN CODE OF 4 WILL         099 03132419
*               BE SENT BACK INDICATING THE JOB IS TO BE FAILED.   099 03132519
*               R3 WILL BE SET PLUS AND WILL CAUSE THIS PROG TO    099 03132619
*               TAKE THE SAME ROUTE THAT IS TAKEN WHEN ALLOCATION  099 03132719
*               RETURNS A NON-ZERO RETURN CODE.                    099 03132819
*                                                                  099 03132919
         LNR    R3,R15    PRIME FOR POSSIBLE ABEND AND SAVE -      099 03133019
```

```
*                          NOTE - A ZERO VALUE REMAINS UNCHANGED      099 03133119
*                                 AND PLUS                            099 03133219
         LTR   R15,R15    ANY ERRORS                                  099 03133319
         BZ    DSOCOMP    NO-CONT MAINLINE                            099 03133419
*                                                                     099 03133519
         LA    R1,N8      YES-SET-UP TO TEST COND CODE                099 03133619
         CR    R15,R1     TEST IF ABOVE/BELOW 8                       099 03133719
         BH    DSOCOMP    HIGH-COND CODE 12 = JOB0 I/O ERROR          099 03133819
*                         KEEP R3 NEG FOR ABEND LATER                 099 03133919
*  COND CODE 8 NOT IN USE                                             099 03134019
         LR    R3,R15     LOW-COND CODE 4 = I/O ERROR ON DSO          099 03134119
*                         DEVICE WHILE WRITING SMB'S, ETC.  PRIME     099 03134219
*                         R3 TO BYPASS EXECUTION OF P/P.              099 03134319
*                         R3 NOW POSITIVE                             099 03134419
         OI    JCTJSTAT,INCMSTS     TURN ON JOB FAIL BIT             099 03134519
*                                                                     099 03134619
DSOCOMP  EQU   *          CONT MAINLINE                               099 03134719
         NI    SCTSTAT2,N255-SCTDSOCL   RESET FOR TERMINATION         099 03134819
*                                                                     099 03134919
         LR    R1,R13                   RESTORE ARSA POINTER.        CR17 03141017
         FREEMAIN R,LV=80,A=(1),SP=TCORE  FREE SAVE AND PARM AREA     099 03141219
*                                                                     099 03141419
         LTR   R3,R3                    SHOUD ATTACH BE BYPASSED.    CR17 03141619
         BZ    IEFSD010                 NO.                          CR17 03141819
         L     R1,LCTTCBAD        ADDRESS OF INIT'S TCB              I272 03142019
         L     R14,TCBJSCB(R1)    JOB STEP JSCB                      I272 03142219
         L     R0,LCTJSCB         INIT'S JSCB                        I272 03142419
         ST    R14,LCTJSCB        JOB STEP JSCB IN LCT               I272 03142619
         ST    R0,TCBJSCB(R1)     INIT'S JSCB IN INIT'S TCB          I272 03142819
         L     R14,LCTEXIT        ADDRESS OF EXIT LIST               I272 03143019
         LA    R14,X0(R14)        ZERO HIGH ORDER BYTE               I272 03143219
*  ***** TEST FOR EXIT LIST TO BE REMOVED IN R20 *****               I272 03143419
         LTR   R14,R14            TEST FOR EXIT LIST                 I272 03143619
         BZ    FREEGWT            BRANCH NO EXIT LIST                I272 03143819
         MVI   IELRTNCD(R14),RTNCODE4 SET RETURN CODE TO 4           I272 03144019
FREEGWT  EQU   *                                                     I272 03144219
         LA    R14,TCORE            YES. LOAD SUBPOOL NO.          CR17 03145017
         SLL   R14,24                                               CR17 03146017
         LA    R0,GPMINPAR+4-GETPTWT    LOAD LENGTH OF GETPART WK   LS17 03146119
         OR    R0,R14                   LOAD SUBPOOL + LENGTH       LS17 03146219
         L     R1,LCTPARM3        LOAD ADDRESS OF GWT                I272 03146319
         FREEMAIN  R,LV=(0),A=(1)      FREE ITS CORE                 LS17 03146419
         LTR   R3,R3      TEST REG STATUS                            099 03146519
         BM    SD062015   NEG REG - JOB0 I/O ERROR FROM              099 03146619
*                         IEFDSOWR, GO TO ABEND                      099 03146719
         LTR   R4,R4                IS THIS ABNORMAL RETURN FROM     099 03146819
*                                   IEFDSOCR?                        099 03146919
         BZ    T0165                NO-GO TO IEFSD165                099 03147019
         USING IEZJSCB,R1           JSCB ADDRESSABILITY             099  03147119
         L     R1,LCTJSCB         ADDRESS OF JOB STEP JSCB           099  03147219
         L     R14,JSCBWTP        ADDRESS OF WTP CONTROL BLK         099  03147319
         FREEJSCB  SYSTEM=MVT     FREE JSCB                          099  03147419
         DROP  R1                                                    099  03147519
         LR    R1,R14             ADDRESS OF WTPCB IN R1             099  03147619
         LA    R14,TCORE          SUBPOOL 253                        099  03147719
         SLL   R14,X24            SUBPOOL IN HIGH ORDER BYTE         099  03147819
         LA    R0,WTPCBSIZ        SIZE OF WTPCB                      099  03147919
```

```
         GR    R0,R14                SUBPOOL AND SIZE IN REG 0          099  03148019
         FREEMAIN R,LV=(0),A=(1)     FREE WTPCB                         099  03148119
         L     R15,IEFSD161          IEFSD161 LINKAGE                   099  03149819
*                                    RETURN TO SELECT ANOTHER JOB       099  03150019
         LR    R1,R8            LCT  ADR                               M4012 03150219
         BR    R15                   XCTL TO IEFSD161 VIA LINKAGE       099  03150419
*                                    MODULE                             099  03150619
IEF065   EQU   *                                                        099  03150819
         L     R15,IEFSD065V                                            CR17 03151017
         LR    R1,R2                       RESTORE PARAM LIST PTR.      CR17 03152017
         BR    R15                         GO TO IEFSD065               CR17 03153017
*********************************************************************** CR17 03193017
*                                                                       CR17 03233017
* BUILD PARAM LIST FOR IEFSD514 TO WRITE OUT TIOT & GET REG SAVE A CR17 03273017
*                                                                       CR17 03313017
*********************************************************************** CR17 03353017
IEFSD010 EQU   *                                                        CR17 03393017
         CLI   CHVCD,SPROGRAM      CHECK FOR STARTED PROGRAM            I272 03394019
         BNE   IEFSD011            BRANCH NOT A STARTED TASK            I272 03395019
         L     R10,12(R2)          LOAD TIOT LIST PTR                   I272 03396019
         L     R10,0(R10)          PTR TO TIOT                          I272 03397019
TIOTSRCH CLC   TIOEDDNM(X8),IEFRDER  IS DDNAME IEFRDER                  I272 03398019
         BE    UCBADDR             BRANCH YES                           I272 03399019
         SR    R3,R3               ZERO REGISTER                        I272 03400019
         IC    R3,TIOELNGH         LENGTH OF TIOT ENTRY                 I272 03401019
         LTR   R3,R3               TEST FOR END OF TIOT                 I272 03402019
         BZ    NORDER              BRANCH END OF TIOT                   I272 03403019
         AR    R10,R3              ADD ENTRY LENGTH TO BASE             I272 03404019
         B     TIOTSRCH            TEST NEXT DD ENTRY                   I272 03405019
UCBADDR  L     R3,TIOESTTB         LOAD UCB POINTER                     I272 03406019
         LA    R3,X0(R3)            ZERO HIGH ORDER BYTE                I272 03407019
         LTR   R3,R3               TEST FOR ZERO UCB REQUEST FOR        I272 03408019
*                                  DUMMY DEVICE                         I272 03409019
         BZ    NORDER              BRANCH IF ZERO                       I272 03410019
         USING UCBOB,R3            ADDRESSABILITY FOR UCB               I272 03411019
         CLI   UCBID,MAINUCB        IS IT A MAIN UCB                    I272 03412019
         BNE   MINORUCB            BRANCH IF DATACELL                   I272 03413019
MOVENAME MVC   CHUNIT(X3),UCBNAME   MOVE UCB NAME INTO CSCB             I272 03414019
         TM    LCTINTSW,LCTSTART   WAS TASK NAME ON COMMAND             I272 03415019
         BZ    IEFSD011            BRANCH NAME SPECIFIED                I272 03416019
         MVI   CHKEY,BLANK         MOVE IN BLANK                        I272 03417019
         MVC   CHKEY+X1(X7),CHKEY  BLANK CHKEY FIELD                    I272 03418019
         MVC   CHKEY(X3),UCBNAME   MOVE UCB NAME INTO CSCB              I272 03419019
         B     TIOTKEY                                                  I272 03420019
         DROP  R3                                                       I272 03421019
MINORUCB LH    R4,DCELBBNR-DATACELL(R3)  PICK UP BIN NUMBER             I272 03422019
         LA    R4,X1(R4)            INITIALIZE FOR LOOP                 I272 03423019
CHKSUB   BCT   R4,SUBUCBLN         SUBTRACT BRANCH ON ZERO              I272 03424019
         S     R3,MAINLGTH         SUBTRACH MAIN UCB LENGTH             I272 03425019
         B     MOVENAME                                                 I272 03426019
SUBUCBLN S     R3,SUBLGTH          SUBTRACT SUB UCB LENGTH              I272 03427019
         B     CHKSUB              CHECK FOR MORE SUBCELLS              I272 03428019
NORDER   TM    LCTINTSW,LCTSTART   WAS TASK NAME ON COMMAND             I272 03429019
         BZ    IEFSD011            BRANCH NAME SPECIFIED                I272 03430019
         MVC   CHKEY(X8),CHCLS     MOVE PROC NAME INTO ID FIELD         I272 03431019
TIOTKEY  L     R10,LCTTCBAD        ADDRESS OF INIT'S TCB                I272 03432019
         L     R10,TCBTIO(R10)     TIOT ADDRESS IN TCB                  I272 03434019
```

```
         MVC    TIOCSTEP(X8),CHKEY TIOT STEP NAME = CHKEY              I272 03435019
         L      R10,12(R2)         LOAD TIOT LIST POINTER              I272 03435219
         L      R10,X0(R10)        PTR TO TIOT                         I272 03435419
         MVC    TIOCSTEP(X8),CHKEY TIOT STEP NAME = CHKEY              I272 03435619
IEFSD011 EQU    *                                                      I272 03436019
*                                                                        * 03460000
         GETMAIN    R,LV=96,SP=TCORE     GM 24-BYTE PARM LIST & 72-  CR17 03463217
         LA     R13,24(R1)              REG SAVE AREA.              CR17 03464017
         ST     R9,0(R1)                1ST WORK - OMPA PTR.        CR17 03464817
         XC     4(4,R1),4(R1)           2ND WORD - ZEROES.          CR17 03465617
         L      R7,12(R2)               GET TIOT LIST ADDR.         CR17 03466417
         MVC    8(8,R1),0(R7)           3RD & 4TH WORDS-TIOT ADDR+  CR17 03467217
         XC     16(8,R1),16(R1)         5TH & 6TH WORDS - ZEROES.   CR17 03468017
         LA     R7,REGSAVE+72           REMOTE PARAM AREA.          CR17 03468817
         ST     R7,OMPCL                                            CR17 03469617
         MVI    OMPOP,3                 INDICATE WRITE              CR17 03470417
         LR     R7,R1                   SAVE PARAM LIST & REG AREA  CR17 03471217
         L      R15,SD514RTE                                        CR17 03472017
         BALR   R14,R15                 GO TO IEFSD514              CR17 03472817
         LTR    R15,R15                 ANY I/O ERROR.              CR17 03473617
         BNZ    SD062015                YES.                        CR17 03474417
         LR     R1,R7                   NO.                         CR17 03475217
         L      R7,4(R2)                RESTORE JCT BASE REG.       CR17 03476017
         MVC    JCTSTIOT(4),4(R1)       CONTROL TABLE ITR TO JCT.   CR17 03476817
         FREEMAIN   R,LV=96,A=(1),SP=TCORE FREE PARM LIST & REG AR  CR17 03477617
************************************************************************ 03480000
*                                                                        * 03500000
* WRITE OUT JCT & SCT TO ITS ORIGINAL POSITION ON THE QUEUE,AFTER    CR17 03520017
* SETTING CKPT/RESTART SWITCHES IN JCT FROM SCT.                     CR17 03540017
*                                                                        * 03560000
************************************************************************ 03580000
*                                                                        * 03600000
*                                                                          03640000
         OI     172(R6),X'80'           SET STEP STARTED BIT IN THE SCT 03660000
         LA     R1,LCTTMWRK+4      2ND WORD OF TIMER AREA           CR17 03662017
         CLC    SCTSTIME,CF0       IS THIS A PROC STEP              CR17 03664017
         LA     R1,LCTTMWRK+4           2ND WORD OF TIMER AREA          03664418
         CLC    SCTSTIME,CF0            IS THIS A PROC STEP             03664818
         BE     STEPLEFT                THE USER SPECIFIED TIME=        03665218
*                                       FOR THE WHOLE PROC.THAT         03665618
*                                       APPLIED TO 1ST STEP. NOW        03666018
*                                       WE SHALL USE WHAT IS LEFT.      03666418
         MVC    1(3,R1),SCTSTIME        ELSE MOVE IN TIME               03666818
STEPLEFT EQU    *                       *                               03667218
         MVC    SCTSTIME(3),1(R1)       MOVE TIME REMAINING TO SCT  SMF1 03667618
         MVI    LCTTMWRK+DEC8,HEX00     IND THAT TIME VALUE IS      SMF1 03668018
*                                            FOR STEP               SMF1 03668418
         L      R14,JCTJMRTL            GET JOB TIME LIMIT          SMF1 03668818
         SRL    R14,DEC8                *                           SMF1 03669218
         LTR    R14,R14                 IS THERE A JOB TIME LIMIT  M4137 03669318
         BZ     IEFSD015                NO, USE STEP TIME IN SCT   M4137 03669418
         CL     R14,HOURS24             DOES ORIG JOB TIME=1440         03669618
         BE     LONGJOB                 YES                             03670018
         S      R14,LCTTMWRK            GET JOB TIME LEFT           SMF1 03670418
         BNM    NOTMINUS                SET TO ZERO IF MINUS        SMF1 03670818
         SR     R14,R14                 *                           SMF1 03671218
NOTMINUS EQU    *                       *                           SMF1 03671618
```

```
         CL    R14,LCTTMWRK+DFC4        J. TIME LEFT GT S. TIME      SMF1 03672018
*                                             NEEDED                  SMF1 03672418
         BNL   IEFSD015                 YES- USE STEP TIME FROM      SMF1 03672818
*                                             SCT                     SMF1 03673218
LONGJOB  EQU   *                        *                                 03673618
         ST    R14,DFC0(R1)             NO - USE JOB TIME LEFT       SMF1 03674018
         MVI   LCTTMWRK+DFC8,HEX80      IND THAT TIME IS FOR JOB     SMF1 03674418
IEFSD015 EQU   *                                                     CR17 03676017
         LA    R9,OMGR1                  A MGR PAR AREA                   03680000
         LA    R13,REGSAVE               REGISTER SAVE AREA               03700000
         LA    R1,REGSAVE+72             REMOTE PARAMETER AREA            03720000
         ST    R1,OMPCL                  ADDRESS OF REMOTE PARAMETER LST  03740000
         MVI   OMPOP,3                   WRITE INDICATOR                  03760000
         MVI   OMPCL,2                   INDICATE MULTIPLE OPERATION      03780000
         L     R7,4(0,R2)                LOAD JCT BASE REGISTER           03800000
         ST    R7,0(0,R1)                JCT CORE ADDRESS TO QUEUE MGR    03820000
*                                       REMOTE PARAMETER AREA            03840000
         ST    R6,8(0,R1)                SCT CORE ADDRESS TO QUEUE MGR    03860000
*                                       REMOTE PARAMETER AREA            03880000
         NI    JCTRSW2,X'C7'             KNOCK OFF BITS 2,3 AND 4.   CR17 03886017
         LA    R4,MASK              LOAD MASK TO GET C/R BITS        CR17 03892017
MASK     EQU   X'38'                LOAD MASK TO GET C/R BITS        CR17 03898017
         SR    R10,R10              ZERO REGISTER,                   CR17 03904017
         IC    R10,SCTSSTAT         LOAD STATUS INDICATORS           CR17 03910017
         NR    R10,R4               GET RID OF ALL BITS BUT C/R      CR17 03916017
         EX    R10,SETBITS          EXEC INSTRUCTION TO SET BITS     CR17 03922017
         MVC   4(4,R1),JCTDSKAD         JCT TTR TO OMPA.               CR17 03932017
         MVC   12(4,R1),SCTDISKA        SCT TTR TO OMPA.               CR17 03972017
         MVI   15(R1),X'00'             SCT TTR0                       CR17 04012017
         LR    R1,R9                    ADDRESS OF O MGR PARAMETER AREA 04060000
         L     R15,IEFOMGRV             ADDRESS OF O MGR                 04080000
         BALR  R14,R15                  HAVE THE TABLES WRITTEN          04100000
         MVI   OMPCL,0                  ZERO OUT NUMBER OF OPERATIONS    04120000
         B     SD062010(R15)            CHECK RETURN CODE                04140000
SD062010 B     SD062020                 RETURN CODE OK                   04160000
         BC    0,SD062010               NO WORK, IMPOSSIBLE ON WRITE     04180000
         BC    0,SD062010               NO SPACE - IMPOSSIBLE, THESE     04200000
*                                       TABLES ARE BEING WRITTEN TO      04220000
*                                       ASSIGNED SPACE                   04240000
*****************************  I/O ERROR                                 04260000
*****************************  CODE TO PROCESS THIS CONDITION            04280000
SD062015 LA    R1,X'080'                SHOULD BE PLACED HERE.      CR17 04300017
         SLA   R1,12                TEMPORARILY, ABEND                   04320000
         ABEND  (1),DUMP                                                 04340000
*****************************                                        CR17 04340717
SD062020 XC    LCTPARM4(X4),LCTPARM4  ZERO PARM4                   I272 04341719
         L     R3,LCTPARM3          SET UP ADDRESSABILITY FOR       I272 04342719
         USING GETPTWT,R3           GET PART WORK TABLE             I272 04343719
         L     R14,LCT CBAD         GET INITIATOR'S TCB.
         L     R1,TCBTIO(R14)       BUMP TO THE TIOT.
         CLI   0(R14),C'E'          FIXED INITIATOR?
         BE    SD062040             YES - BRANCH TO KEEP CURRENT REGION.
         L     R4,GPSIZEPP          REGION SIZE FOR P/P             I272 04344719
         LTR   R4,R4                TEST FOR ZERO SIZE              I272 04345719
         BE    SD062040             BRANCH - KEEP REGION            I272 04346719
         MVI   GPSUBP,POOL246       REPLACE PARTITION SUBPOOL       I272 04347719
         TM    LCTINTSW,LCTIHIER    TEST FOR HIERARCHY              I272 04348719
```

```
         BO    SD062022              BRANCH HIERARCHY ONE                I272 04349719
         MVC   GPADDH0+X1(X3),GPADDH0R+X1  0 OR SPECIFIC ADDR            I272 04350719
         MVC   GPSIZEH0+X1(X3),GPSIZEPP+X1  MOVE REGION SIZE             I272 04351719
         B     SD062040                                                  I272 04352719
SD062022 MVC   GPSIZEH1+X1(X3),GPSIZEPP+X1  MOVE REGION SIZE             I272 04353719
         B     SD062040                                                  I272 04354719
SD062040 EQU   *                                                        LS17 04360017
         LA    R14,TCORE                  LOAD SUBPOOL NO               LS17 04360317
         SLL   R14,24                                                    LS17 04360617
         LA    R0,GPMINPAR+4-GETPTWT    LOAD LENGTH OF GETPART WK       LS17 04360917
         OR    R0,R14                     LOAD SUBPOOL + LENGTH         LS17 04361217
         CLI   GPSUBP,246                 DO WE REPLACE THE PARTITIO    LS17 04361517
         BE    SD162035                   YES                           LS17 04361817
         L     R1,LCTPARM3                ADDRESS OF GETPART WORK TA    LS17 04362117
         FREEMAIN  R,LV=(0),A=(1)         FREE ITS CORE                 LS17 04362417
         XC    LCTPARM3(X4),LCTPARM3    ZERO GWT POINTER                I272 04362519
         B     SD062030                                                  LS17 04362717
SD162035 ST    R0,LCTPARM4                SET UP FOR FREEMAIN IN IEF    CR17 04363017
SD062030 EQU   *                                                        CR17 04364517
         DROP  R3                                                        I272 04364619
         USING IHADCB,R3                                                 I272 04364719
*********************************************************************** CR17 04364817
*                                                                       CR17 04365117
* GET CORE FOR THE USER PARAM LIST,BUILD PARAM LIST.SET UP THE PRO CR17 04365417
* INTERFACE AND SAVE THE ADDR IN REGISTER 4.                            CR17 04365717
*                                                                       CR17 04366017
*********************************************************************** CR17 04366317
         LH    R3,SCTSEXEC                GET CORE FOR THE NO.OF USE    CR17 04366617
         LA    R0,8(0,R3)               PLUS 8 FOR GETMAIN            18428 04366917
         LA    R14,TCORE                                               CR17 04367217
         SLL   R14,24                                                  CR17 04367517
         OR    R0,R14                                                  CR17 04367817
         GETMAIN    R,LV=(0)              GET USER PARAMS CORE.        CR17 04368117
         LR    R4,R1                      SAVE ADDR IN REG 4.          CR17 04368417
         ST    R3,4(0,R1)               LENGTH TO LIST                18428 04368717
         LA    R0,4(R1)                   ADDR OF LENGTH FIELD IN LI   CR17 04369017
         ST    R0,0(R1)                                                CR17 04369317
         OI    0(R1),128                  SET HIGH ORDER BIT TO 1.     CR17 04369617
         BCTR  R3,0                                                    CR17 04369917
         LTR   R3,R3                                                   CR17 04370217
         BM    SD06220                                                 CR17 04370517
         LA    R0,176                                                  CR17 04370817
         GETMAIN R,LV=(0)                 GETMAIN FOR READ BUFFER      CR17 04371117
         LR    R5,R1                      SAVE FOR FREEMAIN            CR17 04371417
         LA    R9,QMGR1                   Q MNGR PARAMETER AREA        CR17 04371717
         LA    R13,REGSAVE                REGISTER SAVE AREA           CR17 04372017
         LA    R1,REGSAVE+72            REMOTE PARAMETER AREA          CR17 04372317
         ST    R1,QMPCL                 STORE ADDR OF REMOTE PARAM     CR17 04372617
         MVI   QMPOP,4                    READ INDICATOR               CR17 04372917
         MVI   QMPNC,X'01'                READ ONE RECORD              CR17 04373217
         ST    R5,0(0,R1)               STORE BUFFER ADDRESS           CR17 04373517
         MVC   4(4,R1),SCTXBTTR         MOVE TTR                       CR17 04373817
         LR    R1,R9                      ADDRESS OF Q MGR PARAMETER   CR17 04374117
         L     R15,IEFQMGRV               ADDRESS OF Q MNGR            CR17 04374417
         BALR  R14,R15                    READ THE RECORD.             CR17 04374717
         EX    R3,IEFMOVE1                                             CR17 04375017
         LR    R1,R5                    RESTORE POINTER                CR17 04375317
```

```
         LA    R0,176                                          CR17 04375617
         FREEMAIN R,LV=(0),A=(1)                               CR17 04375917
SD06220  EQU   *                                               CR17 04376217
         L     R3,OMCAP                PTR TO TRACK STACK INFO  11404 04380914
         L     R3,0(R3)                PTR TO STACK             11404 04381814
         LA    R3,0(R3)                ZERO HI ORDER BYTE      U11404 04382714
         LTR   R3,R3                   TEST IF STACK EXISTS     11404 04383614
         BE    SD06225                 NO - BRANCH              11404 04384514
*                                                                      04385414
         LR    R13,R3                  PTR TO SAVE AREA IN STACK 11404 04386314
         XC    OMPOP(1),OMPOP       ZERO OP CODE FOR PURGE RTN  11404 04387214
         LR    R1,R9                   PTR TO OMGR PARM AREA    11404 04388114
         L     R15,SD06250             ADDR OF STACK PURGE PGM  11404 04389014
         BALR  R14,R15                 GO TO PURGE+FREE STACK   11404 04389914
*                                                                      04390814
         LR    R3,R15                  SAVE RETURN CODE         11404 04391714
         LR    R1,R13                  PTR TO RETURNED SAVE AREA 11404 04392614
         FREEMAIN R,LV=72,A=(1)        FREE AREA                11404 04393514
         LA    R13,REGSAVE             RESTORE SD062 SAVE AREA  11404 04394414
         LTR   R3,R3                   TEST RETURN CODE         11404 04395314
         BE    SD06225                 NORMAL RETURN            11404 04396214
         B     SD062010+12            ERROR RETURN             PTM663 04397116
*                                                                      04398014
SD06225  EQU   *                                               11404 04398914
*                                                                   * 04400000
*********************************************************************** 04420000
* CORE IS GOTTEN FOR A PARAMETER LIST WHICH IS PASSED BETWEEN      I270 04440019
* INITIATOR MODULES AND FOR THE ATTACH PARAMETER LIST WHICH IS     I270 04460019
* INITIALIZED IN IEFSD103 AND USED BY IEFSD263 IN THE LINK         I270 04480019
* PACK AREA TO ATTACH THE SUBTASK.                                 I270 04500019
*********************************************************************** 04560000
         LA    R0,LISTSIZE        SIZE OF PARMETER LISTS          I270 04600019
         LA    R13,LISTSIZE-1     SIZE OF PARM AREA LESS ONE      I270 04640019
         LA    R1,TCORE           SUBPOOL 253                     I270 04720019
         SLL   R1,X24             SP IN LIGH ORDER BYTE           I270 04760019
         OR    R0,R1              SP AND LENGTH IN REG 0          I270 04800019
         GETMAIN R,LV=(0)                                         I270 04880019
         EX    R13,CLEARCOR       ZERO GOTTON CORE                I270 04920019
         LR    R11,R1             EST ADDRESSABILITY OF PARM ARE  I270 04960019
         ST    R4,IEFUSADD        ADDRESS OF USER PARMS           I272 04980019
         LA    R0,IEFPSIZE(R11)   ADDRESS OF ATTACH PARM LIST     I270 05000019
         ST    R0,IEFREMLS        ADDR OF ATTACH LIST IN PARM LT  I270 05040019
         LA    R13,X1(R13)        LENGTH OF GOTTEN CORE           I270 05060019
         STC   R13,IEFREMLS       STORE LENGTH OF GOTTEN CORE     I270 05080019
         L     R3,12(0,R2)              TIOTLIST POINTER                05120000
         ST    R3,IEFTIOTA              PLACE IN PARAMETER LIST         05140000
         L     R5,LCTQDRTY              GET CSCB BASE REGISTER          05160000
         L     R4,LCTTCBAD        ADDRESS OF INIT'S TCB           I272 05180019
         ST    R4,IEFTCBAD              PLACE IN PARAMETER LIST         05200000
         XC    0(4,R3),TIOTPONT(R4)    THIS SERIES OF EXCLUSIVE OR'S    05220000
         XC    TIOTPONT(4,R4),0(R3)    RESULTS IN PUTTING THE JOB STEP  05240000
         XC    0(4,R3),TIOTPONT(R4)    TIOT PTR IN THE INITIATOR'S TCB  05260000
*                                     AND THE INITIATOR TIOT PTR IN    05280000
*                                     THE TIOT LIST.  THIS IS DONE TO  05300000
*                                     SAVE THE PTR TO THE INITIATOR    05320000
*                                     TIOT WHILE THE PTR TO THE JOB    05340000
*                                     STEP TIOT IS PLACED IN THE       05360000
```

```
*                                        INITIATOR'S TCB TO BE REFER-      05380000
*                                        ENCED BY THE OPEN ROUTINE         05400000
         ST    R8,IEFLCTAD                PLACE LCT POINTER INTO PAR LST    05420000
*************************************************************************** 05440000
*                                                                         * 05460000
* THE FOLLOWING SECTION OF CODE GETS CORE FOR AND OPENS THE JOBLIB        * 05480000
*              STEPLIB, AND/OR FETCH DCB'S AS NECESSARY                 *UC42 05500017
*                                                                         * 05520000
*************************************************************************** 05540000
         TM    SCTSSTAT,X'04'       IS PROTECT KEY TO BE ZERO         CR17 05545017
         BO    BYPASS              YES,IGNORE JOBLIB AND FETCH      A16531 05550019
*                                   DCBS                              CR17 05555017
         L     R10,TIOTPONT(R4)           GET TIOT ADDRESS                 05560000
*************************************************************************** 05561019
*                        SET UP STAE ENVIRONMENT                          * 05562019
*************************************************************************** 05563019
         LA    R0,STAELNTH                GET LNTH OF AREA            A16531 05564018
         LA    R14,TCORE                  SUBPOOL NUMBER A            A16531 05565018
         SLL   R14,24                     MOVE TO HI ORDER BYTE       A16531 05566018
         OR    R0,R14                     LNTH REG                    A16531 05567018
         GETMAIN  R,LV=(0)                                                    05568018
         LR    R9,R1                      SAVE PARM ADDRS             A16531 05569018
         LA    R0,AGAIN                   @ STAE EXIT ROUTINE         A29871 05571019
         ST    R0,0(R9)                   SAVE EXIT RTN @             A29871 05573019
         ST    R9,4(R9)                   SAVE PARM AREA @            A29871 05575019
         STM   R4,R11,16(R9)              SAVE REGISTER'S             A29871 05577019
         SR    R0,R0                       ZERO A REGISTER                   05580000
*  THIS IS THE MACRO WHICH SETS UP THE ENVIRONMENT FOR HANDLING       A16531 05580118
* ABENDS AFTER OPEN STMTS. AN ADDRESS OF THE EXIT ROUTINE IS          A16531 05580218
* GIVEN HERE TO ROUTE CONTROL THROUGH THE RETRY ROUTINE. A PARM       A16531 05580318
* AREA ADDRESS IS GIVRN WHICH HAS SAVED REGS FOR THE RETRY            A16531 05580418
         STAE   MF=(E,(R9))               ISSUE STAE MACRO            A29871 05580719
         TM    SCTSTAT2,SCTSTPLB          IS STEPLIB PRESENT           17052 05581017
         BZ    IEFJOBLB                   NO, CHECK JOBLIB             17052 05582017
IEFSD032 DS    0H                                                      17052 05583017
         LA    R0,IEFDCBN-IEFDCBS   DCB LENGTH                        17052 05584017
         LR    R4,R0                SUBTRACT ONE                      17052 05585017
         BCTR  R4,0                 TO EXECUTE MOVE INSTRUCTION       17052 05586017
         LA    R14,TCORE            SUBPOOL NUMBER                    17052 05587017
         SLL   R14,24               TO HIGH-ORDER BYTE                17052 05588017
         OR    R0,R14               OF LENGTH FIELD                   17052 05589017
*                                                                            05590017
         GETMAIN R,LV=(0)           GET DCB CORE                      17052 05591017
*                                                                            05592017
         LR    R3,R1                ADDR TO DCB BASE REGISTER         17052 05593017
         EX    R4,MOVEDCB           MOVE REMOTE DCB TO GOTTEN CORE    17052 05594017
         MVC   DCBDDNAM,STEPLIB          PUT STEPLIB DDNAME INTO DCB17052 05595017
         B     IEFJSOPE                  OPEN  STEPLIB  DCB          17052 05596017
IEFJOBLB TM    JCTJSTAT,JOBLIB           WAS JOBLIB SPECIFIED IN     17052 05606017
*                                        JOB                                 05620000
         BZ    IEFSD030                  NO, CHECK FOR FETCH                 05640000
         LA    R0,IEFDCBN-IEFDCBS        NO.  LENGTH OF DCB.          CR17 05680017
         LR    R4,R0                     LENGTH OF DCB - 1                   05720000
         BCTR  R4,0                      TO EXECUTE                          05740000
         LA    R14,TCORE                 SUBPOOL NUMBER                      05760000
         SLL   R14,24                    TO HIGH ORDER BYTE                  05780000
         OR    R0,R14                    OF LENGTH FIELD                     05800000
```

```
         GETMAIN R,LV=(0)                GETMAIN FOR DCB                    05820000
         LR      R3,R1                   ADDRESS OF REMOTE DCB              05840000
         EX      R4,MOVEDCB              MOVE DCB TO GOTTEN CORE            05860000
         MVC     DCBDDNAM(8),TIOEDDNM    PUT THE DDNAME IN THE DCB          05880000
*  THE EXIT LIST CODE USED FOR 213 ABENDS HAS BEEN REMOVED FROM  A16531 05890018
* THIS MODULE.  IT IS NO LONGER NEEDED NOW THAT A STAE ENVIRON-  A16531 05900018
* MENT HAS BEEN ESTABLISHED THE OPEN STMT IS CHANGED SUCH THAT   A16531 05910018
* IT NO LONGER ADDRESSES THE EXIT LIST                           A16531 05920018
IEFJSOPE LR      R1,R2                  ALLOCATE PARMLIST          A16531 05930018
         STM     R2,R3,8(R9)                                       A29871 05960019
         MVI     0(R1),X'80'             INDICATE END OF LIST              06000000
         OPEN ((3),INPUT),MF=(E,(1))     OPEN THE DCB                      06020000
         TM      DCBOFLGS,X'10'         OPEN SUCESSFUL             A16531 06040018
         BZ      IEFSD33A               BRANCH NO                  A16531 06060018
         ST      R3,LCTJOBLB             SAVE JOBLIB DCB POINTER           06080000
         TM      JCTJSTAT,JOBLIB        WAS JOBLIB SPECIFIED      17052   06086017
         BZ      IEFSD030                                           17052 06092017
IEFSD023 SR      R0,R0                   ZERO A REGISTER                   06100000
IEFSD025 IC      R0,TIOELNGH                                               06120000
         LTR     R0,R0                   ANY MORE ENTRIES ?                06140000
         BZ      IEFSD035                NO, DON'T OPEN FETCH              06160000
         AR      R10,R0                  CHECK FOR                         06180000
         CLI     TIOEDDNM,X'40'          CONCATENATION                     06200000
         BE      IEFSD025                IF CONCATENATED, GET NEXT ENTRY   06220000
IEFSD030 TM      SCTSTYPE,SCTGOSTP       WAS FETCH SPECIFIED ?             06240000
         BZ      IEFSD035               NO, DON'T  OPEN FETCH      17052 06250017
         LA      R0,IEFDCBN-IEFDCBS      DCB LENGTH                        06266017
         LR      R4,R0                   DECREMENT BY ONE                  06272017
         BCTR    R4,0                    FOR EXECUTING MOVE                06278017
         LA      R14,TCORE               SUBPOOL NUMBER                    06284017
         SLL     R14,24                  TO HIGH ORDER BYTE                06290017
         OR      R0,R14                  OF LENGTH FIELD                   06296017
         GETMAIN R,LV=(0)                GET DCB CORE                      06302017
         LR      R3,R1                   PLACE ADDRESS IN R3               06308017
         STM     R2,R3,8(R9)                                       A29871 06311019
         EX      R4,MOVEDCB              MOVE DCB TO GOTTEN CORE           06314017
         MVC     DCBDDNAM,TIOEDDNM       PLACE DDNAME IN DCB               06320017
         LR      R1,R2                   ADDRESS OF REMOTE LIST            06350017
         MVI     0(R1),X'80'             INDICATE END OF LIST              06356017
         OPEN ((3),INPUT),MF=(E,(1))     OPEN THE DCB                      06362017
         TM      DCBOFLGS,X'10'         OPEN SUCESSFUL             A16531 06368018
         BZ      IEFSD033               BRANCH NO                  A16531 06374018
         ST      R3,IEFDCBAD         DCB ADDRESS IN PARM LIST        I270 06378019
         B       IEFSD035                                           17052 06383017
IEFSD33A DS      0H                                                       06403017
         TM      SCTSTAT2,SCTSTPLB      STEPLIB PRESENT?           17052 06423017
         BZ      IEFSD033               NO, JOBLIB                 17052 06443017
IEFSD33H DS      0H                                                       06463017
         CLC     TIOEDDNM(8),STEPLIB    YES, DOES R10 POINT TO     17052 06483017
*                                        STEPLIB ENTRY             17052 06503017
         BE      IEFSD033               YES, GET OUT               17052 06523017
         IC      R0,TIOELNGH            NO, BUMP TO                17052 06543017
         AR      R10,R0                 NEXT ENTRY                 17052 06563017
         B       IEFSD33H               CONTINUE SEARCH            17052 06583017
A7Z      EQU     *                                                        06587018
         BALR    R15,0                                             A16531 06591018
         USING *,R15                                               A16531 06595018
```

```
         L      R12,STAFREG                                        A16531 06599018
         DROP   R15                                                A16531 06603018
         USING  IEFSD062,R12                                       A16531 06607018
         CH     R0,TWELVE                WORKAREA                  A16531 06611018
         BE     NOGO                     BRANCH NO                 A16531 06615018
         L      R9,0(R1)                 GET STAFPARM ADDRS        A16531 06619018
         FREEMAIN  R,LV=104,A=(1)        FREE WKAREA               A16531 06623018
         B      PROCESS                  BRANCH TO CONTINUE        A16531 06627018
NOGO     LR     R9,R2                    GET STAF PARM ADDRS       A16531 06631018
PROCESS  LM     R2,R11,8(R9)             RESTORE REGISTER'S        A29871 06641019
IEFSD033 OI     LCTINTSW,LCTSDOXX  OVERRIDE USER PROGRAM NAME IN     I270 06663019
*                                  IN ATTACH PARM LIST.             I270 06671019
         LA     R0,IEFDCBN-IEFDCBS        LENGTH OF DCB                 06680000
         LA     R4,TCORE                  SUBPOOL NUMBER                06700000
         SLL    R4,24                     TO HIGH ORDER BYTE OF         06720000
         OR     R0,R4                     LENGTH REGISTER               06740000
         LR     R1,R3                     ADDRESS OF REMOTE DCB         06760000
         FREEMAIN R,LV=(0),A=(1)          FREE DCB AND EXIT LIST        06780000
         L      R1,IEFUSADD               ADDRESS OF USER PARAMETERS    06800000
         L      R4,4(R1)                 LENGTH OF USER PARAMS      18428 06820017
         LA     R0,8(R4)                                            18428 06840017
         LA     R4,TCORE                  SUBPOOL NUMBER                06860000
         SLL    R4,24                     TO HIGH ORDER BYTE OF         06880000
         OR     R0,R4                     LENGTH REGISTER               06900000
         FREEMAIN R,LV=(0),A=(1)          FREE USER PARAM LIST          06920000
         LA     R4,8                      GET LENGTH OF USER PARAMS     06940000
         LA     R0,8(R4)                 PLUS 8 FOR GETMAIN         18428 06960017
         LA     R1,TCORE                 SUBPOOL NUMBER             M2434 06980018
         SLL    R1,24                    TO HIGH ORDER BYTE OF      M2434 07000018
         OR     R0,R1                    LENGTH REGISTER            M2434 07020018
         GETMAIN R,LV=(0)                  GETMAIN FOR USERS PARAMS      07040000
         ST     R1,IEFUSADD               SAVE NEW ADDRESS OF USER PARAMS 07060000
         ST     R4,4(0,R1)               LENGTH TO LIST             M2434 07080018
         LA     R0,6(0,R1)       PLACE ADDRESS OF LENGTH FIELD      23021 07100018
         ST     R0,0(0,R1)                IN THE GOTTEN LIST AND        07120000
         OI     0(R1),128                 SET HI-ORDER BIT TO 1         07140000
         MVC    8(8,R1),TIOEDDNM     MOVE IN DDNAME                18428 07180017
IEFSD035 EQU    *                                                     07220000
*     FREE THE STAE PARMAREA GOTTEN FOR THE RETRY                 A27679 07222019
         LA     R0,STAELNTH              GET PARM LENGTH           A27679 07224019
         LA     R14,TCORE                SUBPOOL NUMBER            A27679 07226019
         SLL    R14,24                   MOVE TO HI ORDER BYTE     A27679 07228019
         OR     R0,R14                   LENGTH REGISTER           A27679 07230019
         FREEMAIN  R,LV=(0),A=(R9)       FREE THE AREA             A27679 07232019
BYPASS   EQU    *                                                  A16531 07236019
         L      R4,IEFTCBAD              GET ADDRESS OF INITIATOR'S TCB  07240000
*                                        IN R4                           07260000
         XC     LCTPARM1(X4),LCTPARM1 ZERO FIELD                     I272 07262019
         TM     SCTSSTAT,X'04'            IS PROTECTION KEY TO BE CH CR17 07264017
         BZ     IEFSD040                  NO.                        CR17 07266017
         MVC    LCTPARM1(1),TCBPKF(R4)    YES.SAVE OLD PROTECTION KE CR17 07268017
TCBPKF   EQU    28                                                   CR17 07270017
         XC     TCBPKF(1,R4),TCBPKF(R4)   ZERO OUT PROTECTION KEY IN CR17 07272017
IEFSD040 EQU    *                                                    CR17 07274017
         L      R3,IEFTIOTA              GET ADDRESS OF TIOT LIST IN R3  07280000
*                                                                       07300000
         XC     0(4,R3),TIOTPONT(R4)     THIS SERIES OF EXCLUSIVE OR'S   07320000
```

```
         XC     TIOTPONT(4,R4),0(R3)      PUTS BACK THE JOB STEP AND        07340000
         XC     0(4,R3),TIOTPONT(R4)      INITIATOR TIOT PTRS INTO THE      07360000
*                                         TIOT LIST AND THE INITIATOR'S     07380000
*                                         TCB RESPECTIVELY. (SEE ABOVE      07400000
*                                         WHERE THEY WERE SWAPPED TO        07420000
*                                         ALLOW OPEN TO REFERENCE THE JOB   07440000
* RESTORE THE JSCB ADDRESSES WHICH WERE SWITCHED BEFORE ALLOCATION TCB)     07460000
         L      R0,TCBJSCB(R4)      JOB STEP JSCB                     I272 07540019
         L      R3,LCTJSCB          INIT'S JSCB                       I272 07620019
         ST     R0,LCTJSCB          JOB STEP JSCB IN LCT              I272 07700019
         ST     R3,TCBJSCB(R4)                                        I272 07780019
         LA     R1,IEFECBLT                 ADDRESS OF ECB LIST             07860019
         ST     R1,IEFECBLA                 STORE IN PARAMETER LIST         07960000
         LA     R3,IEFAECB                  ADDRESS OF ATTACH ECB           07980000
         ST     R3,0(0,R1)                  PLACE IN ECBLIST                08000000
         LA     R4,CHCECB                                                   08020000
         ST     R4,4(0,R1)                  PLACE IN ECBLIST          I272 08040019
         OI     4(R1),128                   TURN ON HIGH ORDER BIT OF LIST  08060000
         LR     R1,R2                       ADDRESS OF INPUT LIST           08080000
         FREEMAIN  R,LV=24,A=(1),SP=TCORE                                   08180000
*  THIS IS THE MACRO WHICH CANCELS THE STAE ENVIRONMENT                     08200000
         STAE   0                       CANCEL STAE                A16531 08206018
         LR     R1,R11                   POINT TO PARAMETER LIST    A16531 08212018
         L      R15,IEF63VCN             ADDRESS OF ATTACH MODULE        08220000
         BR     R15                      GO TO ATTACH MODULE             08240000
*     THIS IS THE STAE EXIT ROUTINE. HERE IS WHERE WE SPECIFY VIA          08260000
* A RETURN CODE IN R15 THAT A RETRYB IS TO BE ATTEMPTED. WE          A16531 08261018
* RETURN TO THE STAE INTERFACE WITH THE RETRY ADDRS IN R0            A16531 08262018
AGAIN    EQU    *                                                   A16531 08263018
         BALR   R15,0                                               A16531 08264018
         USING  *,R15                                               A16531 08265018
         L      R12,STAEREG          RE-ESTABLISH BASEREG           A16531 08266018
         DROP   R15                                                 A16531 08267018
         USING  IEFSD062+2,R12                                      A16531 08268018
         LA     R15,4                                               A16531 08269018
         LA     R0,A72                                              A16531 08270018
         BR     R14                                                 A16531 08271018
TWELVE   DC     H'12'                                                      08272018
STAEREG  DC     A(IEFSD062+2)                                              08273018
STAELNTH    EQU  60                                                A16531 08274018
CFO      DC     F'0'                     WORD OF ZEROES FOR COMPARES A29871 08277019
MAINLGTH DC     A(DATACELL-UCBOB)                                          08280000
SUBLGTH  DC     A(L'DATACELL)                                       I272 08282019
IEFRDER  DC     CL8'IEFRDER'                                        I272 08284019
HOURS24  DC     F'8640000'               1440 MIN IN HUNDREDTH OF SEC.  I272 08286019
STEPLIB  DC     CL8'STEPLIB '            DDNAME FOR DCB                     08290018
IEFOMGRV DC     V(IEFOMRAW)                                         DC42 08350017
SYSCMD   ENQ    (IEFSOCBS,IEFO70CB,E,2,SYSTEM),MF=L                        08360000
IEFO70CB DC     C'07'                MINOR FOR SYSTEM TASK          I272 08363019
IEFSOCBS DC     C'SYSIEFSD'          MAJOR                          I272 08366019
ACSTARTG DC     C'STARTING'                                         I272 08369019
BLANKFW  DC     C'      '                                           I272 08372019
IEFMOVE1 MVC    8(0,R4),4(R5)        MOVE USER PARAMS FROM BUFFER       08375019
CLEARCOR XC     X0(X0,R1),X0(R1)                                   18428 08380017
SETBITS  OI     JCTRSW2,X'00'        PUT C/R BITS IN JCT            I270 08390019
TIOTPONT EQU    12                                                  CR17 08410017
                                                                         08420000
```

```
IEF63VCN DC     V(IEFSD063)                                                  08440000
IEFSD65V DC     V(IEFSD065)                                                  08460000
IEFSDSTI DC     V(IEFSD110)              ADDR OF STACK INIT. PGM             08480000
SD514RTE DC     V(IEFSD514)               TIOT WRITE ROUTINE.          CR17 08485017
SD06250  DC     V(IEFSD112)                                           11404 08490014
IEFSD161 DC     V(IEFSD061)          LINKAGE TO IEFSD161                 099 08490719
RESTART  DC     CL8'IEFRSTRT'        STEP NAME FOR RESTARTING STEP       099 08491419
*                                                                        099 08492119
* * * * * * * * * ENQ/DEQ FOR DIRECT SYSOUT CONTROL BLOCKS (DSOCB)       099 08492819
*                                                                        099 08493519
DSOCBNQ  ENQ    (IEFSOCBS,DSOCBNOR,S,05,SYSTEM),MF=L                     099 08494219
*                                                                        099 08494919
* * * ENQ/DEQ Q AND R NAMES                                              099 08495619
*                                                                        099 08496319
*  USING MAJOR NAME IN ENQ 'SYSCMD'                                      099 08497019
DSOCBNOR DC     C'DSOCB'         R - MINOR NAME                          099 08497719
*                                                                        099 08498419
MOVEDCB  MVC    0(0,R3),IEFDCBS          MOVE DCB TO GETTM CORE               08500000
TCORE    EQU    253                                                          08520000
N0       EQU    0                                                       099 08521019
N1       EQU    1                                                       099 08522019
N2       EQU    2                                                       099 08523019
N3       EQU    3                                                       099 08524019
N4       EQU    4                                                       099 08525019
N7       EQU    7                                                       099 08526019
N8       EQU    8                                                       099 08527019
EIGHT    EQU    8                                                       099 08528019
N0       EQU    12                                                      099 08529019
N72      EQU    72                                                      099 08530019
X104     EQU    104                                                     099 08531019
N255     EQU    255                                                     099 08532019
RSTRTCK  DC     CL8'IEFDSDRP'                                           099 08533019
DSOMSG   DC     C'IEF387I DIRECT SYSOUT='                               099 08534019
PERIOD   EQU    C'.'                                                    099 08535019
COMMA    EQU    C','                                                    099 08536019
JOBLIB   EQU    X'80'                                                        08540000
TCBJOBL  EQU    40                                                           08560000
X0       EQU    0                                                       I272 08560119
X1       EQU    1                                                       I272 08560219
X3       EQU    3                                                       I272 08560319
X4       EQU    4                                                       I272 08560419
X7       EQU    7                                                       I272 08560519
X8       EQU    8                        DISPLACEMENT                   I272 08560619
X24      EQU    24                                                      I272 08560719
X96      EQU    96                                                      I272 08560819
X184     EQU    184                                                     I272 08560919
X255     EQU    255                      USED IN MASK                   I272 08561019
X256     EQU    256                                                     I272 08561119
BLANK    EQU    C' '                                                    I272 08561219
IELRTNCD EQU    2                                                       I272 08561319
NOSIOTS  EQU    X'00'                                                   I272 08561419
ONEREC   EQU    X'01'                                                   I272 08561519
READCODE EQU    X'04'                                                   I272 08561619
MAINUCB  EQU    X'FF'                                                   I272 08561719
POOL246  EQU    246                                                     I272 08561819
RTNCODE4 EQU    X'04'                                                   I272 08561919
IOFLAG   EQU    X'81'                                                   I272 08562019
```

```
SPROGRAM EQU    X'04'                VERB CODE FOR STARTED PROGRAM     I272 08562119
TCBTIO   EQU    12                   TIOT DISPLACEMENT IN TCB          I272 08562219
TCBJSCB  EQU    180                                                    I272 08562619
         EJECT                                                               08563017
IEFDCBS  DS     0F                                                          08580000
         DCB DSORG=PO,MACRF=E                                                08600000
         EJECT                                                               08610017
IEFDCBM  EQU    *                                                           08640000
         DCBD   DSORG=(PO,XF)                                                08660000
         EJECT                                                               08670017
IEFCSCB DSECT                                                                08680000
 IEFCHAIN                                                                    08700000
         EJECT                                                               08710017
 IEFOMNGR                                                                    08720000
OMCAP    EQU    IOPARAMS+24              PTR IN OMPA TO TRK STACK INFO      08740000
         EJECT                                                               08750017
*********************************************************************** 08760000
*********************************************************************** 08780000
*        THE FOLLOWING REPRESENTS A BLOCK OF MAIN STORAGE WHICH        * 08800000
*        EXISTS WHILE THE JOB STEP IS RUNNING.  IT IS GOTTEN           * 08820000
*        BY THIS MODULE AND IS FREED BY IEFSD164                       * 08840000
*                                                                      * 08860000
*                                                                      * 08880000
IEFPARAM DSECT                                                               08900000
IEFUSADD DS     F                        ADDRESS OF USER PARAMETERS          08920000
IEFECHLA DS     F                        ADDRESS OF ECB LIST                 08940000
IEFREMLS DS     F                        ADDRESS OF SUPERVISOR L LIST        08960000
IEFLCTAD DS     F                        ADDRESS OF LCT                      08980000
IEFTCBAD DS     F                        ADDRESS O INITIATOR'S TCB           09000000
IEFTIOTA DS     F                        ADDRESS OF TIOT                     09020000
IEFDCBAD DS     F                        ADDRESS OF DCB                I270 09030019
IEFECHLT DS     2F                       ECB LIST                            09040000
IEFAECB  DS     F                        ATA                                 09060000
IEFPLEND EQU    *                                                      I270 09070019
IEFPSIZE EQU    IEFPLEND-IEFPARAM                                      I270 09080019
         EJECT                                                               09090019
         IEZATTCH                                                       I270 09100019
LISTSIZE EQU    IEFPSIZE+ATLSTSIZ                                      I270 09105019
         EJECT                                                               09110017
*********************************************************************** 09120000
*                                                                      * 09140000
*        THE FOLLOWING REPRESENTS A BLOCK OF MAIN STORAGE WHICH IS     * 09160000
*        ALLOCATED FOR THE LIFE OF                                     * 09180000
*        OF THIS INITIATOR.  IT CONTAINS:                              * 09200000
*                                                                      * 09220000
*              (1)  THE LCT (LINKAGE CONTROL TABLE)                    * 09240000
*              (2)  A 2 LEVEL REGISTER SAVE AREA FOLLOWED              * 09260000
*                   THE QUEUE MANAGER PARAMETER AREA                   * 09280000
*              (3)  AN ALTERNATE QUEUE MANAGER PARAMETER AREA          * 09300000
*                                                                      * 09320000
*********************************************************************** 09340000
IEFLCT   DSECT                                                               09360000
  IEFALLCT                                                                   09380000
         EJECT                                                               09390017
LCTBATMN DS     F  *****TO BE ADDED TO LCT                                   09400000
LCTSOOMP DS     F  *****TO BE ADDED TO LCT(VMS ONLY)  POINTER TO             09420000
*                       SYSOUT QUEUE MANAGER PARAMETER AREA                 09440000
```

```
LCTRTRN  DS    F  *****TO BE ADDED TO LCT(VMS ONLY) INITIATOR'S          09460000
*                     RETURN POINT                                      09480000
LCTINTSW DS    0C                  INITIATOR INTERNAL SWITCHES     I272 09482019
LCTIHIER EQU   128                 RUN IN HIERARCHY ONE            I272 09484019
LCTSDOXX EQU   32                  ATTACH IEFSDOXX                 I272 09486019
LCTMINRG EQU   16                  JOB FLUSH - USE MINPAR          I272 09488019
LCTSTART EQU   8                   TASKNAME NOT ON COMMAND         I272 09490019
LCTSTOP  EQU   4                   INITIATOR INTERNAL STOP         I272 09492019
LCTCSCB  DS    F  *****TO BE ADDED TO LCT(VMS ONLY) INITIATOR CSCB       09500000
*                     ADDRESS                                           09520000
LCTTMWRK DS    4F *****TO BE ADDED TO LCT(VMS ONLY) TIMER WORK AREA      09540000
LCTJOBLB DS    F  *****TO BE ADDED TO LCT(VMS ONLY) JOBLIB DCB PTR       09560000
LCTATLST DS    F  *****TO BE ADDED TO LCT(VMS ONLY)  POINTER TO          09580000
*                     ALLOCATE/TERMINATE PARAMETER LISTS                09600000
REGSAVE  DS    36F                     REGISTER AVE AREA                 09620000
QMGR1    DS    9F                      QUEUE MANAGER PARAMETER AREA      09640000
QMGR2    DS    9F                      ALTERNATE QUEUE MANAGER AREA      09660000
TRSTKINF DS    2F                 NEEDED FOR TRACK STACKING AND QUEUE    09680000
*                                 BREAK INFORMATION.  1ST BYTE TO CON-   09700000
*                                 TAIN  NUMBER OF BUFFERS, NEXT 3 BYTES  09720000
*                                 FOR STACK ADDR, NEXT 4 BYTES FOR       09740000
*                                 QUEUE BREAK INFORMATION                09760000
ECBLIST  DS    1F                      PTR                         0C42 09764017
LCTIDENT DS    2F                      IDENTIFIER                  0C42 09768017
LCTFORCE DS    CL8                POSSIBLE FORCE VALUES            1241 09770018
LCTLIMIT DS    C                  LIMIT VALUE                      1241 09772018
FRCPRTY  DS    C                  FORCE PRTY HOLDER                1241 09774018
INITPRTY DS    C                  INITIATOR'S PRTY                 1241 09776018
*   THESE FIELDS ARE NEEDED FOR L-SHAPE/INIT MERGE              *   I272 09776219
         DS    0F                                                  I272 09776419
LCTOPSW1 DS    0C                 INITIATOR OPTIONS BYTE 1         I272 09776619
LCTPKEYF EQU   128                DONT GET PROTECT KEY             I272 09776819
LCTDWFF  EQU   64                 DONT PROCESS DEDICATED WORKF     I272 09777019
LCTSTMDF EQU   32                 DONT PROCESS STOP/MODIFY         I272 09777219
LCTMINPF EQU   16                 GET REGION SIZE SPECIFIED        I272 09777419
LCTCANF  EQU   8                  ALLOW CANCEL ONLY AT ALLOC       I272 09777619
LCTONEJF EQU   4                  PROCESS ONLY ONE JOB             I272 09777819
LCTICMDF EQU   2                  DONT PROCESS INITIATOR CMDS      I272 09778019
LCTEXIT  DS    F                  ADDRESS INITIATOR EXIT LIST      I272 09778219
LCTOPSW2 DS    0C                 INITIATOR OPTIONS BYTE 2         I272 09778419
LCTTIMEF EQU   128                DONT TIME THIS JOB               I272 09778619
LCTCRF   EQU   64                 DONT ALLOW CHECKPT/RESTART       I272 09778819
LCTDSOF  EQU   32                 DONT PROCESS DSO                 I272 09779019
LCTINTH0 EQU   16                 INIT IN HIERARCHY ZERO           I272 09779219
LCTINTH1 EQU   8                  INIT IN HIERARCHY ONE            I272 09779419
LCTCOM   DS    F                  COMMUNICATIONS PARM AREA PTR     I272 09779619
LCTJSCB  DS    F                 ADDRESS OF JSCB                   I272 09779819
IEFEND   EQU   *                       END OF LIFE-OF-TASK BLOCK         09780000
         EJECT                                                           09790017
IEFJCT   DSECT                                                           09800000
 IEFAJCTB                                                                09820000
SMBHDR   EQU   SMBMSGLN                                            099 09820519
HEX00    EQU   X'00'                   HEX EQUATE                        09821018
DEC8     EQU   8                       NUMERIC EQUATE                    09822018
DEC4     EQU   4                       NUMERIC EQUATE                    09823018
DEC0     EQU   0                       NUMERIC EQUATE                    09824018
HEX80    EQU   X'80'                   HEX EQUATE                        09825018
```

```
         EJECT                                                          09830017
IEESCT   DSECT                                                          09840000
 IEEASCTB                                                               09860000
         EJECT                                                          09870017
IEETIOT  DSECT                                                          09880000
 IEETIOT1                                                               09900000
UCB      DSECT                                                     1272 09903019
         IEEUCBOB                                                  1272 09906019
         EJECT                                                          09910017
SIOT     DSECT                                                     1272 09915019
         IEEASIOT                                                  1272 09920019
         EJECT                                                          09925019
         IEZJSCB                                                   1272 09930019
WTPCBPTR EQU   JSCBWTP-IEZJSCB                                          09935019
         EJECT                                                          09941017
GETPTWT  DSECT                                                          09942017
GPSIZEA  DS    1F        CONTAIN THE ADDRESS OF THE REGION SIZE LI LS17 09943017
GPADDLT  DS    1F        CONTAIN THE ADDR OF ADDR LIST FOR THE HIE LS17 09944017
GPCODE   DS    X'0'      CONTAIN 80 TO INDICATE UNCONDITIONAL REGU LS17 09945017
GPSUBP   DS    X'0'      CONTAIN SUBPOOL 247 OR 246                LS17 09946017
         DS    H'0'                                                LS17 09947017
GPHIARC0 DS    0F        CONTAINS  00                              LS17 09948017
GPADDH0  DS    1F        CONTAINS ADDRESS(SPECIFIC) ,ZERO(NON-SPEC LS17 09949017
GPHIARC1 DS    0F        CONTAINS  01                              LS17 09950017
GPADDH1  DS    1F        CONTAINS ADDRESS(SPECIFIC) ,ZERO(NON-SPEC LS17 09951017
GPSIZEH0 DS    1F        SIZE OF H0                                LS17 09952017
GPSIZEH1 DS    1F        SIZE OF H1                                LS17 09953017
GPSIZEPP DS    1F                  SIZE OF REGION FOR P/P          1272 09953319
GPSIZET  DS    1F                  SIZE OF REGION FOR TERMINATE    1272 09953619
GPADDHOR DS    1F        ORGINAL ADDRESS                           CR17 09954017
GPMINPAR DS    1F        247 + MINIMUM REGION SIZE                 CR17 09955017
IEEDSOCB DSECT                                                          09956019
     IEEDSOCB                                                           09957019
         EJECT                                                          09958019
         IEEBASEA                                                       09959019
         IEEWTPCB                                                  1272 09959519
         END                                                            09960000
                                                                        1
```

```
         TITLE 'IEFSD263-MS/1 ATTACH MODULE'                                00020000
IEFSD263 CSECT                                                              00080019
*                                                                   M3767   00080019
* 039200-039800                                                    A24887  00080219
*                                                                  A29871  00080519
*                                                                   M3441  00081019
* 029210-029220                                                    M0432  00082018
*                                                                    M409  00085018
*                                                                   M4160  00087019
*                                                                   M2695  00088019
*                                                                   M2696  00089019
*0054021400-021600                                                   1727  00090014
*2286024200,024400                                                  18428  00092017
*0642                                                               MTS0   00095016
*019400-020200,020600,027200-027400,035200-035400,036200,036400      I272  00096019
*037600,040000                                                      I272   00097019
*                                                                   M4373  00098019
*027600-027800,034800-035000                                         M4005 00099019
*********************************************************************** 00100000
*                                                                     * 00120000
*                         INITIATOR ATTACH MODULE                     * 00140000
*                                                                     * 00160000
*********************************************************************** 00180000
*                                                                     * 00200000
* STATUS - CHANGE LEVEL 000                                           * 00220000
*                                                                     * 00240000
* FUNCTION - THE FUNCTION OF IEFSD263 IS                                00260000
*                                                                       00280000
*            (1) TO ATTACH THE JOB STEP. NOTE THAT THIS INVOLVES        00300000
*                SAVING THE CONTENTS OF THE FIELD IN THE INITIATOR'S    00320000
*                TCB WHICH POINTS TO THE INITIATOR,S TIOT, THEN         00340000
*                REPLACING THAT FIELD WITH THE POINTER TO THE JOB STEP  00360000
*                TIOT, THEN ISSUING THE ATTACH, THEN PUTTING THE        00380000
*                POINTER TO THE INITIATOR'S TIOT BACK IN ITS TCB.       00400000
*                                                                       00420000
*            (2) TO DETERMINE WHETHER OR NOT THE JOB STEP IS TO BE      00440000
*                TIMED. IF SO TO ISSUE THE STIMER MACRO. IF NOT TO      00460000
*                BYPASS IT.                                             00480000
*                                                                       00500000
*            (3) TO ISSUE A WAIT AGAINST THE POSTING OF A NORMAL STEP   00520000
*                TERMINATION ECB OR A STEP CANCEL ECB                   00540000
*                                                                     * 00560000
*            (4) TO INTERFACE WITH ABTERM IF THE JOB STEP IS          I272 00563019
*                CANCELED OF IF THE TIME LIMIT HAS EXPIRED            I272 00566019
*                                                                     I272 00569019
*            (5) TO DETACH THE JOB STEP                               I272 00572019
*                                                                     I272 00575019
* ENTRY POINT:  IEFSD263 FROM IEFSD103                                  * 00580000
*                                                                       * 00600000
* INPUT - REGISTER ONE POINTING TO AN INPUT PARAMETER LIST CONTAING - * 00620000
*             (1) USER PARAMS ADDR                                    * 00640000
*             (2) ECB LIST POINTER                                    * 00660000
*             (3) ATTACH PARAMETER LIST ADDR                          * 00680000
*             (4) LCT POINTER                                         * 00700000
*             (5) INITIATOR TCB POINTER                               * 00720000
*             (6) TIOT LIST POINTER                                   * 00740000
*             (7) DCB ADDRESS                                      I270 00750019
```

```
*                                                                      * 00760000
* OUTPUT - REGISTER ONE POINTING TO THE INPUT PARM LIST CONTAINING -   * 00780000
*              (1) USER PARAMS ADDR                                    * 00800000
*              (2) ECB LIST POINTER                                    * 00820000
*              (3) ATTACH PARAMETER LIST ADDR                          * 00840000
*              (4) LCT POINTER                                         * 00860000
*              (5) ADDRESS OF PARM AREA FOR SYSTEM TASKS.            I272 00880019
*                  ZERO FOR NON SYSTEM TASKS                         I272 00890019
*              (6) TIOT LIST POINTER                                   * 00900000
*              (7) DCB ADDRESS                                       I270 00910019
* LCTPARM1-LCTPARM4 OR THE 16 BYTE PARAMETER AREA WHEN THE LCT IS*M4160 00911019
* WRITTEN TO THE JOB QUEUE HAS THE FOLLOWING FORMAT ON EXIT      *M4160 00912019
* FROM IEFSD263                                                  *M4160 00913019
*                                                                *M4160 00914019
*  TCBFLG  *                TCT ADDRESS                          *M4160 00915019
*          T T R  OF LCT              *  LCTINTSW                *M2696 00916019
*  TCBDSP  *                CSCB ADDRESS                         *M4160 00917019
*                     TCBTCC (TASK COMPLETION CODE)              *M4160 00918019
*                                                                *M4160 00919019
*                                                                       * 00920000
* EXTERNAL REFERENCES- IEFSMFAT                                     SMF1 00940018
*                                                                       * 00960000
* EXIT    IEFSD104                                                  I272 00980019
*                                                                       * 01000000
* TABLES/WORK AREAS:  INPUT PARAMETER, LIFE-OF-TASK BLOCK               * 01020000
*                                                                       * 01040000
* ATTRIBUTES - REENTRANT                                                * 01060000
*                                                                       * 01080000
************************************************************************ 01100000
R0        EQU   0                                                       01120000
R1        EQU   1                                                       01140000
R2        EQU   2                                                       01160000
R3        EQU   3                                                       01180000
R4        EQU   4                                                       01200000
R5        EQU   5                                                       01220000
R6        EQU   6                                                       01240000
R7        EQU   7                                                       01260000
R8        EQU   8                                                       01280000
R9        EQU   9                                                       01300000
R10       EQU   10                                                      01320000
R11       EQU   11                                                      01340000
R12       EQU   12                                                      01360000
R13       EQU   13                                                      01380000
R14       EQU   14                                                      01400000
R15       EQU   15                                                      01420000
Q0        EQU   0                  ZERO DISPLACEMENT VALUE          MP65 01422018
CVTPTR    EQU   16                 POINTER TO CVT                   MP65 01424018
CVTDCB    EQU   X'74'              SYSTEM FLAGS BYTE IN CVT         MP65 01426018
MP65FLAG  EQU   X'04'              M65MP MULTIPROCESSOR SYSTEM      MP65 01428018
STATUS    EQU   79                 STATUS SVC NUMBER                MP65 01430018
STATFLAG  EQU   5                  TCB PARM TO STATUS SVC           MP65 01432018
STMCFLAG  EQU   X'02'              STEP MUST COMPLETE BIT           MP65 01434018
          BALR  R12,0                   SET BASE REGISTER                01440000
          USING *,R12                                                    01460000
          USING  IEFPARAM,R8                                             01480000
          USING  IEFLOT,R4                                               01500000
          USING GETPTWT,R11                                         I272 01506019
```

```
         USING ATTCHLST,R3                                                01512019
*****************************************************************************01520000
*                                                                         *01540000
*  THIS SECTION OF CODE IS FOR PROVIDING A METHOD OF IDENTIFYING          *01560000
*                 THIS MODULE IN A MEMORY DUMP                            *01580000
*                                                                         *01600000
         B     FIRST                                                      *01620000
         DC    X'CCCC'                                                    *01640000
         DC    C'IEFSD263'                                                 01660000
         DC    X'02231970'                                            M3441 01680019
         DC    X'CCCC'                                                     01700000
FIRST    DS    0H                                                         *01720000
*                                                                         *01740000
*****************************************************************************01760000
         EJECT                                                            01780000
         LR    R8,R1                    SAVE REGISTER ONE                 01800000
         L     R9,ALLCORE          PURGE MODULES FROM SUBPOOL 252   M3441 01820019
*                                 WHICH HAVE A USER COUNT OF ZERO         01840019
         GETMAIN EC,LV=(9),A=A                                            01860000
         LM    R3,R4,IEFREMLS      ADDRESSABILITY FOR ATTACH LIST   M3441 01880019
*                                 AND  THE LCT                     M3441 01900019
         L     R11,LCTPARM3         ADDRESS OF GWT                   I272 01940019
         LA    R11,X0(R11)         ZERO HIGH ORDER BYTE              I272 01960019
         LTR   R11,R11              DOES GWT EXIST                   I272 01980019
         BE    SD06305             BRANCH GWT DOES NOT EXIST         I272 02020019
*        IEFSD062 ISSUES OPENS FOR JOBLIB,STEPLIB OR FETCH AND    A29871 02023019
*    SETS UP A STAE ENVIRONMENT TO PREVENT A 213 ABEND IN OPEN    A29871 02026019
*    FROM BRINGING DOWN THE INITIATOR. OPEN LEAVES BEHIND SOME    A29871 02029019
*    CORE IN SUBPOOL 252 THAT WOULD NOT MATTER IF A TASK ABENDS   A29871 02032019
*    NORMALLY, BUT SINCE WE ARE INTERCEPTING THE 213 WE MUST      A29871 02035019
*    FREE THIS CORE IF WE ARE GETTING A NEW PARTITION.            A29871 02038019
         L     R14,LCTTCBAD        GET INITIATOR'S TCB.
         L     R14,12(R14)         BUMP TO THE TIOT.
         CLI   0(R14),C'F'         FIXED INITIATOR?
         BE    SD06355             BRANCH TO KEEP CURRENT REGION.
         LA    R0,252                   SUBPOOL ID TO HI-ORD BYTE A29871 02041019
         SLL   R0,24                    LENGTH AND ADDR BOTH ZERO A29871 02044019
         SR    R1,R1                    INDICATES FREE ENTIRE SP  A29871 02047019
         FREEMAIN R,LV=(0),A=(1)        FREE SUBPOOL 252          A29871 02050019
         LR    R1,R11              PARM LIST REPLACE PART           I272 02060019
         GETMAIN  ,MF=(E,(1))           REPLACE PARTITION           CR17 02100017
         L     R0,GPSIZET          REGION SIZE FOR TERMINATE        I272 02110019
         LTR   R0,R0               TEST FOR NEW REGION              I272 02120019
         BNE   SD06305            KEEP GWT FOR TERMINATE            I272 02130019
SD06355  LR    R1,R11              ADDRESS OF GWT TO BE FREED.
         DROP  R11                                                  M4160 02160019
         L     R0,LCTPARM4                LOAD SUBPOOL + LENGTH       CR17 02180017
         FREEMAIN R,LV=(0),A=(1)          FREE ITS CORE             CR17 02220017
         XC    LCTPARM3+X1(X3),LCTPARM3+X1 ZERO PTR TO GWT          I272 02240019
SD06305  EQU   *                                                    CR17 02260017
         L     R13,LCTCMCBA               PROVIDE SAVE AREA         SMF1 02268018
         LM    R0,R1,IEFTCBAD      TCB ADDRESS IN REG 0, PTR TO   M3441 02276019
*                                 TIOT PTR IN REG ONE                    02284019
         L     R15,SMFAT                  *                         SMF1 02292018
         BALR  R14,R15                    GO TO SMF TO BUILD TCTIOT SMF1 02300018
         LTR   R9,R15                     IF THERE WAS SMF PRESENT  SMF1 02308018
*                                             FOR THIS JOB, R9 NOW  SMF1 02316018
```

```
*                                                POINTS TO TCT          SMF1 02324018
         USING SMFTCT,R9                                                      0233201B
         BZ    SD63007                   *                                    02340018
         ST    R0,TCTWLMT                ST JOB WAIT LIMIT IN R0        SMF1 02348018
         MVC   TCTSW(1),LCTTMWRK+8       MOVE INDICATOR SET BY          SMF1 02356018
*                                            IEFSD162 OF WHETHER        SMF1 02364018
*                                            TIME LIMIT IS JOB OR       SMF1 02372018
*                                            STEP                       SMF1 02380018
SD63007  EQU   *                         *                                    02388018
         L     R7,IEFUSADD            MOVE USER PARAMETER AREA FROM          02400000
         L     R4,4(R7)                 SUBPOOL 253 TO SUBPOOL 0      18428 02420017
         LA    R4,8(R4)                                             18428 02440017
         LR    R0,R4                                                        02460000
         GETMAIN R,LV=(0)             CORE FROM SUBPOOL ZERO                 02480000
         LR    R0,R4            RESTORE LENGTH VALUE                   M409 02490018
         BCTR  R4,R0                  SUBTRACT ONE FROM R4                   02500000
         EX    R4,IEFUSEP             MOVE USER PARM                         02520000
         LA    R4,6(0,R1)           SET UP USER PARM                         02540017
         ST    R4,0(0,R1)                AREA                                02560000
         OI    0(R1),128                 SET HIGH ORDER BIT TO ONE           02580000
         ST    R1,IEFUSADD            UPDATE USER PARM ADDR                  02600000
       LR R1,R7                     LAAD ADDR OF USER PARM AREA              02620000
         L     R7,SPOOL253          FREE SUBPOOL 253                   M3441 02650019
         OR    R0,R7                                                        02680000
         FREEMAIN  R,LV=(0),A=(1)       FREE USER PARM IN 253                02700000
         SR    R9,R9                 CLEAR REG                          I241 02702018
         LH    R0,ATOPMOD           LOAD OPMOD                          I270 02704019
         LTR   R0,R0                 IS OPMOD NEGATIVE                  I241 02706018
         BL    SD06310               YES, BRANCH AND CONTINUE           I241 02708018
         CHAP  (0)                   NO, CHAP INIT UP                   I241 02710018
         LNR   R9,R0                 LOAD NEGATIVE VALUE IN REG TO      I241 02712018
*                                      SAVE ACROSS ATTACH               I241 02714018
SD06310  LM    R1,R6,IEFPARAM       PARMS INTO REGS                     I272 02734019
         L     R7,TCBTIOT(0,R5)          SAVE THE POINTER TO THE               02800000
*                                        INITIATOR'S TIOT                      02820000
         MVC   TCBTIOT(4,R5),0(R6)      STORE PTR TO THE JOB STEP TIOT         02840000
*                                        INTO INITIATOR'S TCB FOR ATTACH        02860000
*                                        (R6 POINTS TO TIOT LIST)               02880000
         SR    R11,R11              CLEAR REGISTER                           02882016
         TM    8(R3),X'80'               NO, BRANCH                          02884016
         BC    8,AGG1                                                         02886016
         L     R11,8(R3)            SET R11 NEGATIVE                         02888016
         XI    8(R3),X'80'           TURN OFF BIT IN ATTACH LIST (FCB)       02890016
AGG1     EQU   *                                                              02892016
         LR    R15,R3                    ADDRESS OF SUPERVISOR L LIST         02900000
         DROP  R3                                                       M4005 02900119
         L     R3,TCBJBL(R5)        SAVE OUR JOBLIB PTR                M4005 02900219
         MVC   TCBJBL(X4,R5),LCTJOBLB PUT NEW PTR FOR ATTACH             M4005 02900319
*************************************************************************      02900519
*                                                                       *      02901019
* SINCE THIS MODULE RESIDES IN THE LINK PACK AREA, THE ATTACH           *      02901519
* PARAMETER LIST IS GOTTEN IN IEFSD162 AND INITIALIZED IN               *      02902019
* IEFSD103, BOTH OF WHICH RUN IN THE INITIATOR REGION.  THE             *      02902519
* ADDRESS OF THE COMPLETED PARM LIST IS PART OF THE INPUT TO            *      02903019
* THIS MODULE. THE FIELDS INITIALIZED AND OPTIONS SELECTED FOR          *      02903519
* THE SUBTASK ARE OUTLINED HERE.                                        *      02904019
*                                                                       *      02904519
```

```
*    KEYWORD SATISFIED          INFORMATION PROVIDED                 *        02905019
*                                                                    *        02905519
*        EP                     ENTRY POINT NAME                     *        02906019
*        ROLL                   ROLLOUT CRITERIA                     *        02906519
*        DCB                    JOBLIB DCB ADDRESS                   *        02907019
*        ECB                    ECB WAITED ON BY INITIATOR           *        02907519
*        LPMOD                  LIMIT PRIORITY                       *        02908019
*        DPMOD                  DISPATCHING PRIORITY                 *        02908519
*        HIARCHY                HIERARCHY INFORMATION                *        02909019
*                                                                    *        02909519
* IN ADDITION THE PARAMETER LIST HAS BEEN INITIALIZED TO CAUSE       *        02910019
* THE FOLLOWING PROCESSING BY THE ATTACH SERVICE ROUTINE.            *        02910519
*                                                                    *        02911019
*    . TCB IS INITIALIZED AS A JOB STEP TCB.                         *        02911519
*                                                                    *        02912019
*    . THE JOB PACK AREA QUEUE POINTER IS PROPAGATED FROM THE        *        02912519
*      INITIATOR'S TCB                                               *        02913019
*                                                                    *        02913519
*    . A 72 BYTE REGISTER SAVE AREA IS PROVIDED FOR THE              *        02914019
*      INITIAL ROUTINE OF THE JOB STEP                               *        02914519
*                                                                    *        02915019
*    . THE PROTECT KEY IS PROPAGATED FROM THE INITIATOR'S TCB        *        02915519
*                                                                    *        02916019
*    . THE TASK IS SET TO RUN IN PROBLEM PROGRAM MODE.               *        02916519
*                                                                    *        02917019
*    . SUBPOOL ZERO IS SHARED WITH THE PROBLEM PROGRAM.              *        02917519
*                                                                    *        02918019
*    . THE JSCB ADDRESS IN PLACED IN THE SUBTASK'S TCB               *        02918519
*                                                                    *        02919019
**********************************************************************        02919519
         ATTACH  MF=(E,(1)),SF=(E,(15))                                       02920000
         ST    R3,TCBJBL(R5)       RESTORE JOBLIB POINTER            M4005 02920719
         L     R3,LCTQDRTY              ADDRESS OF CSCB              I272 02921019
         USING IEECSCB,R3           CSCB ADDRESSABLIITY              I272 02922019
         ST    R1,CHSPB            STORE TCB ADDRESS IN CSCB        I272 02922519
         LTR   R11,R11             IS TCB BIT TO BE SET FOR GRAPHICS      02924016
         BZ    AGG2                BRANCH IF NO                           02928016
         OI    20(R1),X'20'         SET TCBGRPH BIT IN TCB                02932017
AGG2     EQU   *                                                          02936016
         LR    R11,R1                    SAVE ATTACHED JOBSTEP TCB ADDR   02940000
         ST    R7,TCBTIOT(0,R5)         RESTORE THE POINTER TO THE        02960000
*                                        INITIATOR'S TIOT                 02980000
         L     R1,CVTPTR           GET CVT ADDRESS                  MP65 02982018
         TM    CVTDCB(R1),MP65FLAG  TEST IF MULTIPROCESSOR            MP65 02984018
         BZ    MPNDBYPS            NO, JOBSTEP NOT RUNNING          MP65 02986018
         L     R0,MPNDFLGS         PARM FOR STATUS SVC              MP65 02988018
         LA    R1,00(,R11)         PASS JOBSTEP TCB ADDRESS         MP65 02990018
         SVC   STATUS              SET TCB NONDISPATCHABLE          MP65 02992018
MPNDBYPS EQU   *                                                    MP65 02994018
         LA    R0,LCTTMWRK+4             ADDRESS OF TIME INTERVAL         03000000
         LR    R10,R0                    PUT ADDRESS IN R10               03020000
         CLC   HOURS24(4),0(R10)        CHECK FOR INDICATION THAT STEP    03040000
         BH    SETTIME                  IS NOT TO BE TIMED                03060000
         LA    R7,1                     SET SWITCH TO INDICATE TIMER      03080000
*                                       WAS NOT SET                       03100000
         MVC   4(4,R10),TUHRS24         SET TIME REMAINING FIELD OF       03120000
*                                       TIMER WORK AREA TO 1440 MIN       03140000
```

```
*                                        SO THAT IF THIS IS A CATALOGED   03160000
*                                        PROCEDURE THE REMAINING STEPS    03180000
*                                        WILL ALSO NOT BE TIMED           03200000
         B      BYPASS                   BRANCH AROUND STIMER MACRO       03220000
SETTIME  SR     R7,R7                    SET SWITCH TO INDICATE TIMER     03240000
*                                        WAS SET                          03260000
         STIMER TASK,EXIT,BINTVL=(0)      SET TIMER                       03280000
BYPASS   EQU    *                                                        03300000
         L      R6,LCTPARM1          ADDRESS OF SYS TASK PARM        I272 03301019
         LA     R6,X0(R6)            CLEAR HIGH ORDER BYTE           I272 03302019
         LTR    R6,R6                TEST FOR SYSTEM TASK            I272 03303019
         BE     NONSYSTK             BRANCH NOT SYSTEM TASK          I272 03304019
         MVC    X0(X16,R6),LCTPARM1 INITIALIZE PARM LIST             I272 03304519
         L      R1,SPOOL253          FREE SUBPOOL 253               M3441 03305519
         LA     R0,IEFEND-IEFLOT     LENGTH OF LCT                   I272 03307019
         OR     R0,R1                SP AND LENGTH IN REG 0          I272 03308019
         FREEMAIN R,LV=(0),A=(4)     FREE LCT                        I272 03309019
         LR     R13,R6               ADDRESS OF PARM AREA            I272 03310019
         B      GOWAIT                                               I272 03311019
NONSYSTK LA     R13,LCTPARM1         ADDRESS OF PARM IN LCT          I272 03312019
GOWAIT   EQU    *                                                    I272 03313019
         LR     R1,R2                     ADDRESS OF ECB LIST              03320000
         L      R2,4(0,R1)                ADDRESS OF CANCEL ECB            03340000
         NI     TCBPKF+5(R11),255-STMCFLAG  SET TCB DISPATCHABLE      MP65 03350018
         WAIT   ECBLIST=(1)                                                03360000
         LTR    R0,R9                 DID INIT HAVE TO CHAP UP        I241 03360418
         BZ     SD06320               NO, BRANCH AND CONTINUE         I241 03360818
         CHAP   (0)                   CHAP INIT BACK DOWN             I241 03361218
SD06320  MVC    TCBPQE(X4,R5),TCBPQE(R11) UPDATE PQE PT IN INIT TCB  I272 03362219
         CLI    X0(R13),PKEZERO      IS PROTECT KEY TO BE ALTERED    I272 03364619
         BZ     SD63020              BRANCH NO                       I272 03367619
         MVC    TCBPKF(X1,R5),X0(R13) RESTORE PROTECT KEY INIT TCB   I272 03370619
SD63020  EQU    *                                                    CR17 03374017
         LTR    R7,R7                    CHECK TO SEE IF TIMER WAS SET    03380000
         BC     2,NOTEST                 IF NOT BRANCH AROUND TTIMER      03400000
         TTIMER CANCEL                    TEST TIMER                      03420000
         L      R9,TCBTCT(R5)        GET PTR TO                      I272 03421019
         LA     R9,0(R9)                 TCT                          SMF 03423018
         LTR    R9,R9                    DOES SMF APPLY              SMF1 03424018
         BZ     NOSMF                    NO                               03425018
         LM     R14,R15,TCTSTOF          GET TIME EXTENSIONS IF ANY  SMF1 03426018
         XC     TCTSTOF(8),TCTSTOF       AND CLEAR EXT FLD           SMF1 03427018
         D      R14,CON385               CONVERT TU TO HUND SEC      SMF1 03428018
         A      R15,0(R10)               ADD IN ORIG VALUE           SMF1 03429018
         ST     R15,0(R10)               SAVE ADJ VALUE              SMF1 03430018
NOSMF    EQU    *                                                        03431018
         ST     R0,4(R10)                 SAVE TIME REMAINING             03440000
NOTEST   EQU    *                                                        03460000
         TM     0(R2),POSTBIT             WAS CANCEL SPECIFIED ?          03580000
         BZ     SD63010                   NO                              03600000
         CLI    CHSPC+X1,SYSCNCL         CHECK TO SEE IF THE         I272 03604019
         BE     CODE422                   SYSTEM CANCELLED JOB        I272 03606019
         TM     X0(R2),X32           WAS JOB CANCELLED W/OUT DUMP    I272 03608019
         BZ     SD06710                   NO                          I272 03610019
         MVC    CHSPC(X4),CODE1           MOVE IN ABEND CODE          I272 03612019
         B      SD06730              CONTINUE PROCESSING             I272 03614019
SD06710  EQU    *                                                    I272 03616019
```

```
         TM     X0(R2),X16            WAS JOB CANCELLED WITH DUMP      I272 03618019
         BZ     SD06720                    NO                          I272 03620019
         MVC    CHSPC(X4),CODE2            INDICATE DUMP               I272 03622019
         B      SD06730                    CONTINUE                    I272 03624019
SD06720  EQU    *                                                      I272 03626019
         MVC    CHSPC(X4),CODE3            TIMER EXPIRED - DUMP        I272 03628019
         B      SD06730               CONTINUE                         I272 03630019
CODE422  EQU    *                                                      I272 03632019
         MVC    CHSPC(X4),CODE4          MOVE SYSTEM CANCEL CODE       I272 03634019
SD06730  EQU    *                                                      I272 03636019
         OI     TCBFLGS+X1(R11),TCBSTI    INDIC NO STAE OPERATIONS     I272 03638019
         OI     CHSTS,CHABTERM        INDICATE ABTERM FOR SVC 34       I272 03640019
         LA     R1,X0(R3)             ADDRESS OF CSCB                  I272 03642019
         MGCR   (1),CHAIN                  GO TO ABTERM VIA MASTER     I272 03644019
         LA     R1,IEFAECB            ADDRESS OF ATTACH ECB            I272 03646019
         WAIT ECB=(1)                      WAIT ON ATTACH ECB          I272 03648019
SD63010  SR     R0,R0                 CLEAR REGISTERS TO INDICATE            03653019
         SR     R1,R1                 FREE ALL OF SUBPOOL ZERO               03658019
         FREEMAIN   R,LV=(0),A=(1)  SUBPOOL ZERO                             03663019
         L      R10,X12(R13)         SAVE SP AND LENGTH OF GWT        I272 03668019
         L      R7,X8(R13)           ADDRESS OF GWT                  M4160 03673019
         LA     R7,X0(R7)            ZERO HIGH ORDER BYTE            M4160 03678019
         ST     R3,X8(R13)           STORE CSCB ADDRESS              M4160 03683019
         MVC    X8(X1,R13),TCBDSP(R11) MOVE DISPATCHING PRIORITY     M4160 03688019
         MVC    CHPKE(X1),TCBPKF(R11) SAVE PROTECT KEY IN CSCB       M3767 03700719
         MVC    X0(X1,R13),TCBFLGS(R11)  SAVE TCBFLGS                I272 03701019
         MVC    X1(X3,R13),TCBTCT+X1(R11)  SAVE TCT PTR              I272 03701519
         MVC    X12(X4,R13),TCBTCC(R11)  SAVE TASK COMPLETION CODE   I272 03702019
         XC     TCBFSA+X1(X3,R11),TCBFSA+X1(R11)                     I272 03702519
                                          ZERO PGM SAVE AREA PTR     I272 03703019
         LA     R1,CHSPB             ADDRESS OF SUBTASK TCB          I272 03703519
         DETACH (1)                                                   I272 03704019
         USING GETPTWT,R7                                            M4160 03704619
         LTR    R7,R7                DOES GWT STILL EXIST                   03705219
         BE     SD06330               BRANCH NO GWT                  I272 03706019
         L      R14,LCTTCBAD         GET INITIATOR'S TCB.
         L      R14,12(R14)          BUMP TO THE TIOT.
         CLI    0(R14),C'F'          FIXED INITIATOR?
         BE     SD06330              BRANCH TO KEEP CURRENT REGION.
         FREEMAIN R,SP=247           FREE REGION                      I272 03707519
         MVI    GPSUBP,POOL247       INDICATE GET REGION              I272 03708019
         XC     GPADDHO(X8),GPADDHO  ZERO SPECIFIC ADDRESS            I272 03708519
         TM     X7(R13),LCTIHIER     TEST HIERARCHY                  M2696 03709019
         BO     SD06328               BRANCH HIERARCHY 1              I272 03709519
         MVC    GPSIZEHO(X4),GPSIZET  MOVE REGION SIZE                I272 03710019
         MVI    GPSIZEHO,ENDLIST      INDICATE END OF LIST            I272 03710519
         B      SD06329                                               I272 03711019
SD06328  MVC    GPSIZEH1+X1(X3),GPSIZET+X1                            I272 03711519
SD06329  LR     R1,R7                ADDRESS OF GWT IN REG ONE       M2695 03712019
         GETMAIN ,MF=(E,(1))               GET NEW REGION              I272 03712519
         LR     R1,R7                ADDRESS OF GWT TO BE FREED      M4160 03713019
         LR     R0,R10               SP AND LENGTH                    I272 03713519
         FREEMAIN  R,LV=(0),A=(1)                                     I272 03714019
SD06330  EQU    *                                                    I272 03714519
         ST     R6,X16(R8)           STORE ADDRESS OF PARM AREA FOR   I272 03715519
*                                    SYSTEM TASKS.  R6 WILL BE ZERO   I272 03716019
*                                    FOR NON SYSTEM TASKS.            I272 03716519
```

```
         LR    R1,R8                  PARAMETER LIST POINTER                 03720000
         XCTL  EP=IEFSD104,MF=(E,(1))                                        03740000
EXIT     EQU   *                      EXIT RTN USED WHEN TIMER EXP           03760019
         LR    R1,R2                       CANCEL ECB                       03780000
         LR    R7,R14                      SAVE REG 14                      03800000
         POST (1)                          POST CANCEL ECB                  03820000
         LR    R14,R7                      RESTORE REGISTER 14              03840000
         RETURN                                                             03860000
HOURS24  DC    F'8640000'                 1440 MINUTES(IN HUNDREDTHS OF     03880000
*                                         SECONDS)                          03900000
TOHRS24  DC    X'C5'                  1440 MINUTES IN TIMER UNITS   A24887  03920019
         DC    X'C1'                  IF SPECIFIED ON EXECUTE CARD  A24887  03940019
         DC    X'00'                  THE JOB IS NOT TO BE          A24887  03960019
         DC    X'00'                  TIMED                         A24887  03990019
A        DS    F                                                            04020000
ALLCORE  DC    X'00FFFFF8'                                                  04040000
SPOOL253 DC    X'FD000000'                                            M3441 04041019
MPNDFLGS DC    AL2(STMCFLAG),AL2(STATFLAG)   STATUS SVC PARMS        MP65   04043018
CON385   DC    F'385'                     TU TO HUND SEC                SMF1 04046018
SMFAT    DC    V(IEFSMFAT)                 SMF TCT BUILDER              SMF1 04052018
X0       EQU   0                                                      I272 04052419
X1       EQU   1                                                      I272 04052819
X3       EQU   3                                                      I272 04053219
X4       EQU   4                                                      I272 04053619
X8       EQU   8                                                      I272 04054019
X16      EQU   16                   DISPLACEMENT                      I272 04054419
X32      EQU   32                   DISPLACEMENT                      I272 04054819
SYSCNCL  EQU   X'42'                SYSTEM CANCEL INDICATOR           I272 04055219
POOL247  EQU   247                                                   I272 04055619
ENDLIST  EQU   X'80'                                                 I272 04056019
PPABEND  EQU   X'80'                                                 I272 04056419
TCBFSA   EQU   112                                                        04056819
TCBFLGS  EQU   29                                                    I272 04057219
TCBPOE   EQU   X'98'                                                 I272 04057419
TCBSTI   EQU   X'40'                                                 I272 04057619
CODE1    DC    X'00222000'                 JOB CANCELLED - NO DUMP   I272 04058019
CODE2    DC    X'80122000'                 JOB CANCELLED - DUMP      I272 04058419
CODE3    DC    X'80322000'                 TIMER EXPIRED - DUMP      I272 04058819
CODE4    DC    X'00422000'               EXCEEDED SPEC QUEUE SPACE   I272 04059219
POSTBIT  EQU   X'40'                                                      04060000
PKEZERO  EQU   X'00'                                                 I272 04062019
TCBTCC   EQU   X'10'                                                 I272 04064019
TCBPKE   EQU   28                                                    I272 04066019
TCBDSP   EQU   X'23'                                                M4160 04067019
X6       EQU   6                                                     I272 04068019
X7       EQU   7                                                    M2696 04069019
X12      EQU   12                                                    I272 04070019
X24      EQU   24                                                    I272 04072019
TCORE    EQU   253                                                   I272 04074019
IEFUSEP  MVC   0(0,R1),0(R7) MOVE USER PARM FROM 253 TO ZERO               04080000
TCBJBL   EQU   40                      JOBLIB POINTER DISPLACEMENT IN      04100000
*                                      TCB                                 04120000
TCBTIOT  EQU   12                      TIOT PTR DISPLACEMENT IN TCB        04140000
TCBTCT   EQU   164                    *                              SMF1 04150018
IEFPARAM DSECT                                                             04160000
IEFUSADD DS    F                       ADDRESS OF USER PARAMETERS          04180000
IEFECBLA DS    F                       ADDRESS OF ECB LIST                 04200000
```

```
IEFREMLS DS     F                          ADDRESS OF SUPERVISOR L LIST     04220000
IEFLCTAD DS     F                          ADDRESS OF LCT                   04240000
IEFTCBAD DS     F                          ADDRESS OF TCB                   04260000
IEFTIOTA DS     F                          ADDRESS OF TIOT                  04280000
IEFDCBAD DS     F                         ADDRESS OF DCB                1270 04290019
IEFECBLI DS     2F                         ECB LIST                         04300000
IEFAECB  DS     F                          ATTACH ECB                       04320000
IEFPLEND EQU    *                                                           04328019
IEFPSIZE EQU    IEFPLEND-IEFPARAM                                           04336019
         IEFTCT                                                             04344018
DEC246   EQU    246                      NUMERIC EQUATE                     04348018
DEC24    EQU    24                       NUMERIC EQUATE                     04352018
DEC0     EQU    0                        NUMERIC EQUATE                     04356018
*********************************************************************** 04380000
*                                                                     * 04400000
*        THE FOLLOWING REPRESENTS A BLOCK OF MAIN STORAGE WHICH IS    * 04420000
*        ALLOCATED FOR THE LIFE OF                                    * 04440000
*        OF THIS INITIATOR.  IT CONTAINS:                             * 04460000
*                                                                     * 04480000
*              (1)  THE LCT (LINKAGE CONTROL TABLE)                   * 04500000
*              (2)  A 2 LEVEL REGISTER SAVE AREA FOLLOWED BY THE      * 04520000
*                   THE QUEUE MANAGER PARAMETER AREA                  * 04540000
*              (3)  AN ALTERNATE QUEUE MANAGER PARAMETER AREA         * 04560000
*                                                                     * 04580000
*********************************************************************** 04600000
IEFLCT   DSECT                                                          04620000
  IEFALLCT                                                              04640000
LCTBATMN DS     F  *****TO BE ADDED TO LCT                              04660000
LCTSOOMP DS     F  *****TO BE ADDED TO LCT(VMS ONLY)  POINTER TO        04680000
*                     SYSOUT QUEUE MANAGER PARAMETER AREA               04700000
LCTRTRN  DS     F  *****TO BE ADDED TO LCT(VMS ONLY) INITIATOR'S        04720000
*                     RETURN POINT                                      04740000
LCTINTSW DS     0F                 INITIATOR INTERNAL SWITCHES      1272 04742019
LCTIHIER EQU    128                RUN IN HIERARCHY ONE             1272 04744019
LCTSDOXX EQU    32                 ATTACH IEFSDOXX                  1272 04746019
LCTMINRG EQU    16                 JOB FLUSH - USE MINPAR           1272 04748019
LCTSTART EQU    8                  TASKNAME NOT ON COMMAND          1272 04750019
LCTSTOP  EQU    4                  INITIATOR INTERNAL STOP          1272 04752019
LCTCSCB  DS     F  *****TO BE ADDED TO LCT(VMS ONLY) INITIATOR CSCB     04760000
*                     ADDRESS                                           04780000
LCTTMWRK DS     4F *****TO BE ADDED TO LCT(VMS ONLY) TIMER WORK AREA    04800000
LCTJOBLB DS     F  *****TO BE ADDED TO LCT(VMS ONLY) JOBLIB DCB PTR     04820000
LCTATLST DS     F  *****TO BE ADDED TO LCT(VMS ONLY)  POINTER TO        04840000
*                     ALLOCATE/TERMINATE PARAMETER LISTS                04860000
REGSAVE  DS     36F                        REGISTER AVE AREA            04880000
QMGR1    DS     9F                         QUEUE MANAGER PARAMETER AREA 04900000
QMGR2    DS     9F                         ALTERNATE QUEUE MANAGER AREA 04920000
         DS     8F                                                  1272 04920919
*   THESE FIELDS ARE NEEDED FOR L-SHAPE/INIT MERGE              *   1272 04921819
         DS     0F                                                  1272 04922719
LCTOPSW1 DS     0C                 INITIATOR OPTIONS BYTE 1         1272 04923619
LCTPKEYF EQU    128                DONT GET PROTECT KEY             1272 04924519
LCTDWFF  EQU    64                 DONT PROCESS DEDICATED WORKF     1272 04925419
LCTSTMDF EQU    32                 DONT PROCESS STOP/MODIFY         1272 04926319
LCTMINPF EQU    16                 GET REGION SIZE SPECIFIED        1272 04927219
LCTCANF  EQU    8                  ALLOW CANCEL ONLY AT ALLOC       1272 04928119
LCTONEJF EQU    4                  PROCESS ONLY ONE JOB             1272 04929019
```

```
LCTICMDF EQU   2                    DONT PROCESS INITIATOR CMDS      I272 04929919
LCTEXIT  DS    F                    ADDRESS INITIATOR EXIT LIST      I272 04930819
LCTOPSW2 DS    0C                   INITIATOR OPTIONS BYTE 2         I272 04931719
LCTTIMEF EQU   128                  DONT TIME THIS JOB               I272 04932619
LCTCRF   EQU   64                   DONT ALLOW CHECKPT/RESTART       I272 04933519
LCTDSOF  EQU   32                   DONT PROCESS DSO                 I272 04934419
LCTINTH0 EQU   16                   EXECUTE INITIATOR IN HIER 0      I272 04935319
LCTINTH1 EQU   8                    EXECUTE INITIATOR IN HIER 1      I272 04936219
LCTCOM   DS    F                    COMMUNICATIONS PARM AREA PTR     I272 04937119
LCTJSCB  DS    F                   ADDRESS OF JSCB                        04938019
IEFEND   EQU   *                         END OF LIFE-OF-TASK BLOCK        04940000
*                                        ORDER BYTE OF R15                04960000
IEFCSCB  DSECT                                                      I272 08960019
 IEECHAIN                                                           I272 12960019
GETPTWT  DSECT                                                             16960019
GPSIZEA  DS    1F        CONTAIN THE ADDRESS OF THE REGION SIZE LI LS17 20960019
GPADDLT  DS    1F        CONTAIN THE ADDR OF ADDR LIST FOR THE HIE LS17 24960019
GPCODE   DS    X'0'      CONTAIN 80 TO INDICATE UNCONDITIONAL REGU LS17 28960019
GPSUBP   DS    X'0'      CONTAIN SUBPOOL 247 OR 246                LS17 32960019
         DS    H'0'                                                LS17 36960019
GPHIARC0 DS    0F        CONTAINS  00                              LS17 40960019
GPADDH0  DS    1F        CONTAINS ADDRESS(SPECIFIC) ,ZERO(NON-SPEC LS17 44960019
GPHIARC1 DS    0F        CONTAINS  01                              LS17 48960019
GPADDH1  DS    1F        CONTAINS ADDRESS(SPECIFIC) ,ZERO(NON-SPEC LS17 52960019
GPSIZEH0 DS    1F        SIZE OF H0                                LS17 56960019
GPSIZEH1 DS    1F        SIZE OF H1                                LS17 60960019
GPSIZEPP DS    1F        REGION SIZE FOR P/P                       I272 64960019
GPSIZET  DS    1F        REGION SIZE FOR TERMINATE                 I272 68960019
GPADDHOR DS    1F        ORGINAL ADDRESS                           CR17 72960019
GPMINPAR DS    1F        247 + MINIMUM REGION SIZE                 CR17 76960019
 IEZATTCH                                                                  80960019
         END                                                               84960019
```