TRI FILE COPY

ESD ACCESSION LIST
TRI Call No. 74430
Copy No. 1 of 2 cys.

ESD RECORD COPY
RETURN TO
SCIENTIFIC & TECHNICAL INFORMATION DIVISION
(TRI), Building 1210

ESD-TR-71-167

M70-101

LATENT CAPABILITIES FOR DECISION MAKING IN A DYNAMIC ENVIRONMENT

W. G. Welchman

JULY 1971

Prepared for

DEPUTY FOR PLANNING AND TECHNOLOGY

ELECTRONIC SYSTEMS DIVISION
AIR FORCE SYSTEMS COMMAND
UNITED STATES AIR FORCE
L. G. Hanscom Field, Bedford, Massachusetts

Project 603C

Prepared by

THE MITRE CORPORATION
Bedford, Massachusetts

Contract F19(628)-71-C-0002

Approved for public release; distribution unlimited.

AD731754

When U.S. Government drawings, specifications, or other data are used for any purpose other than a definitely related government procurement operation, the government thereby incurs no responsibility nor any obligation whatsoever; and the fact that the government may have formulated, furnished, or in any way supplied the said drawings, specifications, or other data is not to be regarded by implication or otherwise, as in any manner licensing the holder or any other person or corporation, or conveying any rights or permission to manufacture, use, or sell any patented invention that may in any way be related thereto.

Do not return this copy. Retain or destroy.

ESD-TR-71-167 M70-101

LATENT CAPABILITIES FOR DECISION MAKING IN A DYNAMIC ENVIRONMENT

W. G. Welchman

JULY 1971

Prepared for

DEPUTY FOR PLANNING AND TECHNOLOGY

ELECTRONIC SYSTEMS DIVISION
AIR FORCE SYSTEMS COMMAND
UNITED STATES AIR FORCE
L. G. Hanscom Field, Bedford, Massachusetts

Project 603C

Prepared by

THE MITRE CORPORATION
Bedford, Massachusetts

Contract F19(628)-71-C-0002

Approved for public release; distribution unlimited.

FOREWORD

This technical Report was prepared by The MITRE Corporation, Bedford, Massachusetts, under contract F19(628)-71-C-0002, Project 603C. This document provides an overview of work accomplished in the Tactical Information System area concerning the meaning and use of latent information in the decision making process. Dynamic organizations whose future operations are unpredictable should have a wide range of latent capabilities for the handling and use of tactical information.

REVIEW AND APPROVAL

This technical report has been reviewed and is approved.

Daniel E. McPherson Jr.

DANIEL E. McPHERSON, Jr., Col, USAF
Chief, Gen Pur For Sys Plng Div
Deputy for Planning and Technology

ABSTRACT

When an organization operates in a dynamic environment, management needs an information system capable of handling unexpected situations as well as normal ones. Each element in the organization should always have selective access to information needed for sound decision making. Both live and latent information will be involved. Coordinated teamwork will call for group communication. Information system design must provide not only for management and supervisory decisions, but also for those decisions that must be made by the rank-and-file and by inanimate equipment. The adverse effects of human failings in communication must be minimized. This paper analyzes several aspects of the problem and suggests a system configuration. The paper also discusses the "integrated approach to system design," an approach that has provided latent capabilities for handling unforeseen situations.

CONTENTS

	Page
INTRODUCTION	1
LIVE AND LATENT TACTICAL INFORMATION	3
ACQUISITION, SELECTIVITY, AND CONTROL	7
INFORMATION FLOW FOR ANY TASK UNIT	8
CONFIGURATION OF AN INFORMATION SYSTEM	13
BUILDING LATENT CAPABILITIES INTO A SYSTEM	17
APPENDIX SOME ASPECTS OF THE SATI CONCEPT	25

INTRODUCTION

This paper is concerned with task-oriented decision making in a large, complex, and dynamic organization whose activities are managed in accordance with broad but well-defined objectives. The term "task unit" will denote any element in the organization that has assigned functions and responsibilities related to the achievement of the objectives of the organization. Information that might be used in making tactical task-oriented decisions (leading to immediate or near-term actions) will be called "tactical information." Strategic decision making will not be considered.

In any large and complex organization, the effective handling of tactical information will require a well-designed system. The addition of the adjective "dynamic" is intended to imply that, at various times in the future, the organization will be faced with new and unexpected situations, whose characteristics cannot be accurately predicted at the present time. The management of the organization, therefore, must endeavor to ensure that every task unit will always have access to the right tactical information for its decision making without becoming bogged down by irrelevant information. The challenge to system design of the word "always," which is taken to imply "even in unpredictable future situations," is the principal theme of this paper.

For some years the author has been developing a system concept for handling tactical information in a battlefield environment. The essential starting point of this development was an extensive analysis of military operations (primarily those of a Joint Task Force in a limited war environment) from the point of view of communication. The analysis led to

a formulation of optimum system characteristics, which provided guidelines for the resulting system concept of "Selective Access to Tactical Information" (SATI)*.

Not having carried out a comparable analysis for a non-military organization, the author cannot assert with confidence that any of the principles of the SATI system concept would be applicable. It is tentatively suggested, however, that similar thinking may well apply to non-military organizations having the following broad characteristics:

(a) The organization contains many different types of task units operating at various levels and having a great variety of functions and responsibilities.

(b) The achievement of goals depends on well-coordinated teamwork among groups of units performing related tasks in different locations.

(c) The organization operates in a dynamic environment in which success depends on rapid adaptation to unpredictable situations.

(d) Such adaptation may call for the prompt establishment of teamwork among new groupings of task units having newly defined functions and responsibilities.

(e) A considerable degree of automation has been introduced, resulting in the assignment of many functions and responsibilities to inanimate task units.

---

* All stages of the development of the SATI concept are discussed in a 200-page MITRE document, ESD-TR-71-77 (M70-97), June 1970. Some aspects of the concept are presented in the appendix to the present paper.

LIVE AND LATENT TACTICAL INFORMATION

In order to discuss tactical decision making, it is convenient to make a distinction between "live" and "latent" information. Tactical information will be considered "live" when it is newly acquired and/or being transferred by some means of communication such as a radio transmission. It will be considered "latent" when it is held inactive in some form of store or memory (animate or inanimate) from which it is available at any time for active participation in tactical decision making.

To illustrate this distinction, let us consider the following two situations. The first is taken from the beginning of a section entitled "Semiotic, or the Theory of Signs" in a well-known book by Colin Cherry.*

> "All communication proceeds by means of signs, with which one organism affects the behaviour of another . . . . There is here immediately a difficulty of definition. How can we distinguish between communication proper, by the use of spoken language or similar empirical signs, and other forms of causation? For instance, if I tell someone to go jump in the lake and, in fear, he does so, then I have communicated with him; but if I push him in, his final state may appear similar, but I can scarcely be said to have communicated with him! What is the difference, then, between my spoken message and my push?"

*Colin Cherry, On Human Communication, The Technology Press of Massachusetts Institute of Technology, 1957, page 219.

An important difference is that the spoken message causes the man to make a decision, whereas the push causes involuntary action. In fact, this spoken message is a form of live tactical information; its reception triggers the decision. It is important to note, however, that this decision depends on two things, the spoken message and the man's fear. This fear is a latent state of mind which suddenly plays a part in tactical decision making. It will be convenient, therefore, to extend the meaning of the term "latent tactical information" to include this man's fear and other conditions of the human mind that may influence tactical decision making.

The second situation is that of a man opening his garage door. As he drives his car towards his garage, he may press a button to cause the transmission of a signal (message) to a device which will open the garage door for him. Alternatively he may get out of the car and push the door open. Again the end result is the same, but in the former procedure live tactical information is transmitted to the device and the device makes a decision. The necessary latent tactical information in the device could be the radio frequency on which it is to receive the signal.

These two trivial situations illustrate three important points:

(a) Even the simplest yes-no decisions will often depend on more than one item of tactical information.

(b) Latent tactical information may suddenly become an active ingredient in decision making.

(c) A directive to a rank-and-file individual or to an inanimate device is live tactical information, which will trigger a decision (even if the decision is to do nothing). If this decision is to result in a desired action, the individual or device must possess appropriate latent information, communicated at an earlier

time (e.g., by indoctrination, training, exercises, threshold settings in measuring devices, frequency selection, etc.).

Tactical information handled by inanimate task units is essentially factual information. A sensor detects the changing values of certain physical quantities and decides what signals (if any) it should transmit. The automatic pilot of an aircraft receives control instructions and instrument measurements; it decides to apply direct action to the flight controls. A general-purpose computer contains latent tactical information in the form of a stored program and stored data; it will respond to live tactical information in the form of an instruction to perform a specific task; the task may involve a highly complex sequence of yes-no decisions leading to an ultimate decision to put out a message containing requested items of stored information or the results of requested data processing.

The uses of latent information in decision making by human task units will vary enormously. For example, the pilot of a tactical reconnaissance aircraft may detect a small movement on the ground out of the corner of his eye and decide to look more closely; this decision may be a subconscious reflex action, or it may result from having been trained to notice particular types of movement. Having looked more closely, the pilot may decide to take some form of direct action; this decision may be influenced by previous indoctrination, specific instructions, etc. After further investigation the pilot may decide that he should immediately send in a report, in which case he will recall the instructions he has received for composing and transmitting a message reporting the particular type of event or situation that he has observed. At the other end of the spectrum, a commander and his battle staff may be preparing the directives for a combined operation involving many subordinate task units. For this purpose many related

decisions will have to be taken and many items of tactical information will be used, some of them being acquired during the planning process.

In human decision making, newly acquired live tactical information of a factual nature is evaluated, and a sequence of thought processes leads to a decision the result of which may be no action, direct action, or the output of a message containing live tactical information for use elsewhere. Both the evaluations and the sequences of thought processes will involve many types of latent tactical information, some of which may be factual while others are non-factual. Examples of factual latent information are standard operating procedures, content of instruction manuals, interpretations of codes, wiring diagrams, maps, situation displays, knowledge of recent or current local events, general statements of objectives, specific directives, meanings of words in a foreign language, and so on. Examples of non-factual latent information that may affect human judgment in decision making are instinct, subconscious reflexes, personal prejudice, physical or environmental circumstances, familiarity with the thought patterns of a speaker, and the fear that was introduced in Colin Cherry's anecdote.

The latent information, factual or non-factual, employed by the receiver of a message containing live tactical information affects his interpretation of that message, and hence his decision to act upon it. It is not suggested that all misinterpretations of messages received by a human being are related to non-factual latent information employed by the receiver. (The original message may be ambiguous or incomplete, repetition by intermediaries may cause distortion, and the recipient may fail to listen or read attentively.) It is suggested strongly, however, that command or management, training activities, and system planning can do a great deal to ensure that the many failings of human beings as communicators do not impair decision making, particularly in unexpected circumstances. In addition, it

is a basic function of command or management to ensure that, whatever may happen, each task unit will always have access to the necessary factual information, both live and latent.

ACQUISITION, SELECTIVITY, AND CONTROL

Any system that is to provide access to live tactical information must be concerned with the acquisition of information as well as with the three processes of transfer, reception, and interpretation that are usually included in "communication." Indeed, we are forced to include the fourth basic process of acquisition in any meaningful discussion of the handling of tactical information. It will be argued that each of the four processes must be both selective and to some degree controllable by the command or management system.

The acquisition process includes direct visual observation, the use of inanimate sensors, and the results of data processing. Selectivity is necessary if the most critical tactical information is to be obtained. Since the individuals involved in acquisition may not always know what information is most critical elsewhere, the selective application of effort needs to be based on directives and guidance from commanders or management. Similarly, when tactical information has been acquired, the selection of items to be included in a message needs directives and guidance from the command or management system. These considerations lead to a very important objective of command or management. Because many critical items of tactical information can be acquired only by the rank and file, task units at the lowest echelons must be supplied ahead of time with latent tactical information that will guide their decisions relating to acquisition and reporting.

Some degree of control over the reception process is needed to ensure that task units will not have access to information that they are not authorized to receive. Furthermore, out of all the tactical information to which access is authorized, each task unit must be able to select those items that are likely to be of immediate importance. Selectivity and control are needed in the transfer process, to ensure optimum use of information-handling capacity under overload conditions, and in the application of latent information in the interpretation process.

Control by command or management of the processes of acquisition, transfer, reception,and interpretation must be achieved by a system of standard operating procedures (in military parlance, SOPs) which will clearly define the functions and responsibilities of each task unit as (a) an information acquisition unit and information source, and (b) a message-receiving terminal, information-handling point, and direct action unit. Furthermore, it must be possible to modify these SOPs at short notice, to deal with any new situation that may arise.

INFORMATION FLOW FOR ANY TASK UNIT

A task unit has been defined to be any element in an organization that has assigned functions and responsibilities related to the achievement of the objectives of the organization. Furthermore it has been pointed out that all task units, including those of the rank and file, will have some decision-making responsibility for which live and/or latent tactical information will be needed. (For example it may be extremely important, when unpredicted situations arise, for rank-and-file personnel to make decisions - right decisions - on the recognition and reporting of critical events. It may be equally important that decision making by inanimate equipment, such as a decision to signal an alarm, shall be an integral part of the overall organizational structure.)

We now define the direct exercise of control over the activities of an individual task unit to be task unit command. Thus in the case of a one-man task unit, such as an infantryman, a pilot, or a duty officer, command is exercised by the man himself. In the case of a large task unit, command is still exercised by one man, but with advice and assistance from members of a staff and their supporting organizations. (In non-military organizations command may be exercised by a committee.)

Although the size of task units, and the complexity of their responsibilities, will vary considerably, the pattern of information flow for all task units (including those that are partly or completely inanimate) can be represented by a single diagram, shown as Figure 1.

In the top center of the diagram is a COMMAND box showing Acquisition, Evaluation, and Planning leading to Decision Making which in turn leads to Direct Action and/or to the Formulation of messages containing tactical information for use in decision making by other task units. These messages will fall into two broad categories, namely (a) Directives, Guidance, and Assistance (DGA) and (b) Reports, Requests, and Acknowledgments (RRA). This, of course, is an oversimplification, because decision making permeates the whole process. For example, during evaluation or planning it may be decided that more information is needed, and this may lead to direct action, to the formulation of a directive, or to the formulation of a request.

To the left of the COMMAND box are an ACCESS-to-information box and an information-PROCESSING box. Of these the ACCESS box is primarily a receiving terminal capable of monitoring all types of incoming information. The ACCESS box is capable of selecting messages that are wanted by the COMMAND box in accordance with instructions received from

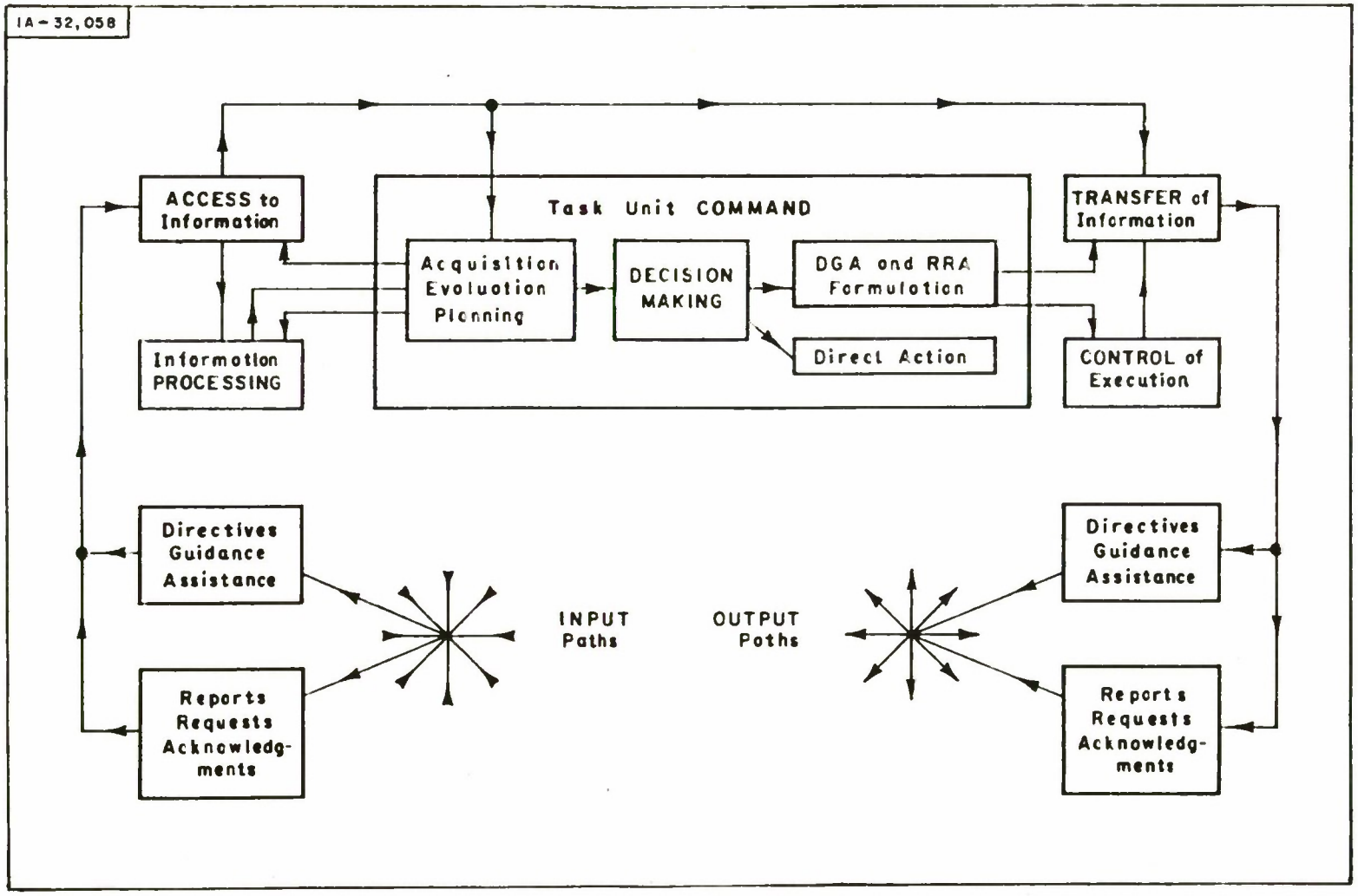

Figure 1. A Diagram of Information Flow For Any Task Unit

the Acquisition section. Some of these selected messages are passed directly from the ACCESS box to the COMMAND box; others are passed to the PROCESSING box. In addition certain types of incoming messages will be automatically selected and passed to the COMMAND box without any local instructions.

The PROCESSING box may be used both for transient live information and for latent information. When the processing is sophisticated, the box represents, among other functions, the means of updating and selectively retrieving any latent information that it contains. The larger task units may employ fully automatic storage and retrieval techniques for handling latent information. In the case of a one-man task unit the PROCESSING box may be entirely in his head.

The ACCESS box receives directives, guidance, assistance, reports, requests, and acknowledgments via a number of INPUT paths, which are shown in a star configuration. This illustrates the fact that information of importance from any source should be able to reach the task unit by the most direct path, whether this path, in terms of the organization, is vertical, lateral, or diagonal. The information sources and categories of information that are of primary importance to the task unit will vary with the responsibilities currently assigned to it; they will also vary with its own current assessment of threats and opportunities that could relate to its assigned objectives. The optimum configuration of interconnecting paths from other task units will vary accordingly.

Much of the tactical information in the message category of directives, guidance, and assistance will come from the immediately superior task unit in the next operational echelon. This information may be pictured as arriving on the downward vertical path of the INPUT star. Some directives,

guidance, and assistance, however, should be received directly from a higher command echelon. (For example a commander at a high echelon may issue an alerting directive that should be received directly by subordinate task units at all levels.)

The message category of directives, guidance, and assistance will also include tactical information from other sources, notably from controlling or supporting task units that provide specialized forms of guidance and assistance to the task unit depicted in the diagram. Thus some forms of directives, guidance, and assistance should be able to reach this task unit by the lateral or downward diagonal paths of its INPUT star.

When we turn to the many types of reports, requests, and acknowledgments that must be exchanged among groups of cooperating task units, and remember that new groupings, with new responsibilities and objectives, may have to be created in a hurry, it is evident that the configuration of the INPUT star should indeed have extreme flexibility. Ideally it should be possible to provide a direct input path from any other task unit.

To the right of the COMMAND box in Figure 1 are a TRANSFER-of-information box and a CONTROL-of-execution box. The TRANSFER box represents primarily an information source, equipped to transmit messages by various means. The processes involved in arranging messages for transmission are also included in the TRANSFER box. These processes may be largely automatic, and directives, guidance, and assistance related to them may be received at any time from the COMMAND box and/or from another task unit via the ACCESS box by the path shown at the top of Figure 1.

The CONTROL box represents that part of the procedure of controlling the execution of directives that is performed within the task unit.

Outgoing messages from the CONTROL box are handled by the TRANSFER box.

The star configuration of OUTPUT paths suggests an ability to establish a direct path to any other task unit. Again a distinction is made between the two broad message categories, DGA and RRA. Note that some of of the outgoing information may have been acquired by observation, or by retrieval from the latent information in the PROCESSING box, in response to a request from another task unit.

CONFIGURATION OF AN INFORMATION SYSTEM

To be always prepared for any eventuality, system design should make it possible for each task unit to obtain access to messages from any other task unit. Furthermore the need for such access may arise suddenly and unexpectedly. These two considerations strongly suggest a system design based on the configuration of Figure 2.

The central column of this figure represents a large number of "first-stage" task units, each having an access box and a transfer box. The main net, indicated by a heavy line to the right of the central column, is some form of high-capacity common-user message transmission system with the property that

> The transfer box of each first-stage task unit may transmit on the main net, and its transmission may be received by the access box of any authorized first-stage task unit.

All messages on the main net are in digital form. Mutual interference between two messages is prevented by a time-sharing scheme,

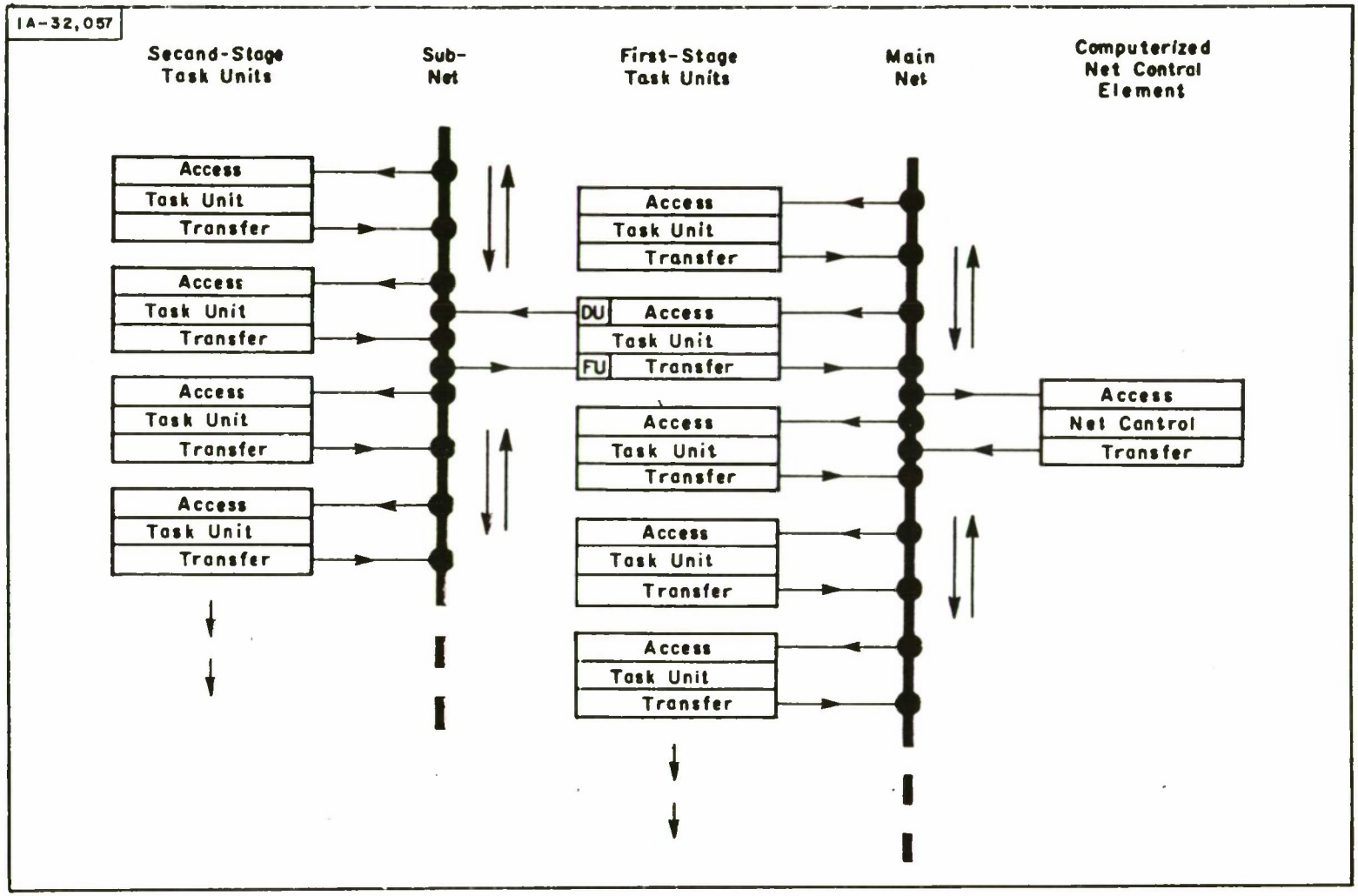

Figure 2. An Approach to System Design

organized by the computerized net control element on the right of Figure 2.

The access box of each first-stage task unit has equipment that will automatically reject any message that the task unit is not authorized to receive or does not wish to receive. Thus, although the main net may handle a tremendous quantity of traffic, each task unit will select only a very small fraction of the total traffic.

The automatic rejection and selection will depend on an examination of certain codes that are placed at the beginning of each message by the originating transfer box. One of these codes will be a receiving code and each access box will contain a list of such codes supplied by the net control element. An access box will automatically reject any message whose receiving code has not been included in its list by the net control element.

The list of receiving codes in a task unit's access box will include an all-station code, and the task unit's unique identity code. Thus it is possible both to broadcast a message to all first-stage task units and also to send a message to any one specified task unit. In addition, however, the system offers a very flexible form of group communication in which it is possible for a message from any one task unit of a group to be received by any other task unit of the group when this is considered necessary by the responsible commander or manager and by the recipient.

Group communication of this type can be established very quickly whenever a sudden emergency calls for a combined operation involving coordinated team work between a number of task units who would not normally communicate with each other. A special receiving code is assigned to the combined operation and is sent to all participants by the

net control element. Messages related to the combined operation will use this receiving code and may be received by all participants.

Note, however, that the automatic process of message selection may involve an examination of digital codes that convey information about the nature of the message. Thus a task unit taking part in the combined operation need not accept all the related messages. By applying test criteria to codes other than the receiving code, the task unit's access box can select only those messages that are of the greatest interest in the current situation. Furthermore, if a sudden change in the situation results in a need for different types of information, the test criteria can be changed accordingly.

The high capacity of the time-shared main net makes it possible for a large number of coordinated teams to have their own group communication. Furthermore, the danger of message distortion is considerably reduced by the fact that the main net is essentially a broadcast system; when propagation conditions are good, all recipients get exactly the same message.

Let us now look at the left-hand side of Figure 2, which shows a number of second-stage task units capable of achieving group communication by means of a sub-net. Note that one of the first-stage units, the second from the top, has boxes marked FU and DU attached to its transfer and access boxes. The FU box is a Funneling Unit, which selects traffic from the sub-net for funneling onto the main net. The DU box is a Distributing Unit which selects messages from the main net for distribution on the sub-net. Other sub-nets may be served by other first-stage units. Furthermore, FU and DU boxes attached to second-stage units could serve groups of third-stage units communicating by means of a sub-sub-net. By sending appropriate selection instructions to the FU and DU boxes it is

possible to ensure that any task unit in any of the nets can get a wanted message from any other task unit. In particular, every task unit can be sent the directives, guidance, and assistance that it needs.

Essentially, the messages that flow on the main net contain an immediately available but perishable form of tactical information. When a message is selected by a particular task unit, it can play an active part in immediate decision making by that task unit or it can add to the unit's latent information. Some messages may be selected by a task unit that acts as a data bank, holding latent information for possible future use by other task units or for the record. Messages that are not selected by any first-stage task unit are lost (and they should be lost, because no task unit has any use for them).

The first-stage task units, operating on the high-capacity main net, will require equipment to perform a variety of functions, including transmission timing and the automatic application of test criteria for message selection. Fortunately the advent of large-scale integration of microminiature electronics will make it practical to supply individual task units with such equipment. The second-stage and third-stage task units could operate in less sophisticated modes than the first-stage units, and could receive considerable assistance from funneling units and distributing units. In military applications, small remote elements operating in enemy-infested territory would need such assistance.

BUILDING LATENT CAPABILITIES INTO A SYSTEM

This paper emphasizes the need of many organizations for information systems that can handle unexpected situations as well as normal ones. The paper is particularly concerned with large organizations whose operations demand well-coordinated teamwork among groups of units performing

related tasks in different locations. If such an organization is faced with a critical situation of an unexpected nature, the command or management must be able to establish new forms of coordinated team work, new patterns of flow of tactical information, and new criteria for decision making. The smooth achievement of such an adjustment will depend in part on whether task units already possess the latent information that they need for the new situation; it will depend even more on whether the command or management, the individual task units, and the organization as a whole have the necessary latent capabilities.

To provide further illustrations of the notions of latent information and latent capability, let us consider the applications of standard 80-column punched cards. For any particular application, a card format will be designed. The cards will be divided into sections, or "fields," in a specified manner, and the interpretations of the codes punched in each field will be clearly indicated either by printing on the card or in a separate instruction manual.

Let us suppose that an organization uses punched cards of a specified format to record information about its individual personnel for input to a computer system. The images of these punched cards will be stored in some form of computer memory, such as magnetic tape or magnetic disc. The card images will be used at different times for different purposes.

In designing the format in which items of information are to be arranged on the card, the system engineer will try to include every item that is likely to be required for some type of data processing that management might require. When the card images are not in use, all items are latent. In any computer run designed to provide specific information for management, some items will become live while others remain latent. A different computer run will cause a different set of items to become live.

When management comes up with a new and unforeseen problem, calling for specific items of information about individual employees, the card images will provide the necessary latent capability if these items can be derived from the set of items that was specified in the design of the card format.

Let us suppose now that an organization uses punched cards of a specified format as a means of communicating messages to human beings. (This involves transmitting the coded information on a card over a digital communication channel.) Since the interpretations of the codes punched in each field can be clearly explained in an instruction manual, sufficient indoctrination and practice can greatly reduce the danger of misinterpretation by recipients of the messages. Furthermore the instruction manual can be prepared in different languages, permitting non-distorted exchange of information between personnel of different nationalities. The system has the latent capability of introducing more languages by preparing more instruction manuals.

The punched card itself, therefore, is not only a highly flexible means of recording and/or transferring information; it also possesses remarkable latent capabilities. Furthermore, many years before the advent of electronics, standard punched-card systems based on the keypunch, the sorter, the collator, the reproducer, and the tabulator found applications that were never dreamed of by the designers of the equipment. In fact, by some means or other, the designers built a great deal of latent capability into the standard punched-card systems. The same was true of the first generation of general-purpose digital computers, which also found many applications that were never dreamed of by their designers.

In recent years the notion of building latent capabilities into a system has become familiar to more and more engineers, to whom it is almost synonomous with the term "integrated approach to system design." In the

military environment, because the characteristics of future operations are largely unpredictable, there is an obvious need for a wide range of latent capabilities for handling tactical information and making decisions. In non-military environments it is suggested that many organizations need to manage their flow of tactical information in a manner that will ensure good decision making by all their task units, animate and inanimate, in times of unexpected crisis as well as in normal situations. It is also worth noting that a need for flexibility arises from the rapid pace of technological development. The introduction of a new inanimate task unit in a complex system will call for changes in the pattern of information flow within this system. Furthermore, if the new unit is introduced in large quantities, a change in the requirements for human skills may require major changes in training programs to provide the necessary latent information for equipment operation and maintenance.

An integrated approach to engineering design is largely a way of thinking that has arisen from the experience of engineers and others in the application of automation to complex problems. An engineer, intending to apply the current technology of automation to a problem, will not accept the way in which the problem has been formulated for a manual solution, or for handling by obsolescent techniques. Instead, he will reformulate the problem in various ways and will study all the interfaces and interactions that may be involved. During this process he will have certain criteria in mind and will be searching for a formulation of the problem that matches the technology that is available to him. Having reached his formulation, he will specify the system hardware as a set of interdependent elements, which together form an integrated system.

An important criterion for integrated design is time phasing. The designer will be concerned with the past, present, and future. Is his

system design compatible with past designs, does it meet present needs, is it adaptable to future needs, can it incorporate future technological advances?

The configuration of an information system that is illustrated by Figure 2 of this paper is an example of an integrated approach. Indeed, this figure can be used to illustrate one of the recognized means of achieving integrated design of avionics systems in future aircraft. Traditionally each avionics system (e.g., an instrument landing system) has been designed for one purpose and has been wired in accordingly. During the working life of an aircraft, however, it is almost certain that new requirements and technology will make it desirable to introduce changes. For example, it may be desirable to use an existing display unit for a new purpose. This will involve providing channels of communication to the display unit from new sensors, from new controls, and perhaps from external task units. With traditional design, the necessary communication paths within the aircraft will be hard to provide. With the configuration of Figure 2 it is only necessary to associate the display, controls, sensors, radio inputs, etc., with the time-shared, high-data-rate main net, which in this case would be a high-capacity transmission line.

As another example of a type of communication problem that calls for built-in latent capabilities, let us think for a moment of the highly sophisticated procedure of a countdown for a missile launch. Each element of the complex apparatus interacts with many other elements, so the thorough testing of all these interactions must involve a highly complex system of information flow between large numbers of animate and inanimate task units. Furthermore, in this new field of human endeavor, experience is being gained all the time and technology is advancing at a fantastic pace. To deal with discovered faults, and to utilize improved technology, it is necessary to make design changes. This in turn calls for changes in the

information flow required for countdown. If this information flow were based entirely on conventional point-to-point voice circuits the requirements would be very hard to meet, and the malfunctioning of human communication would be hard to overcome. On the other hand, the information system configuration and design approach that are outlined in this paper offer the necessary flexibility for design changes, provide group communication where it is needed, and go a long way toward reducing the hazards of faulty human communication.

Although the progress of automation has been largely responsible for the integrated approach to system design, it should be noted that this approach is not necessarily accompanied by actual automation. Preliminary analysis of a problem with an eye to automation has often led to the adoption of an improved manual system. In such a case, the improved manual system could perhaps have been designed without any thought of automation, but somehow the attempt to make system operation independent of human intelligence often tends to produce a more basic formulation of the problems and a more flexible system design, which will be better able to provide latent capabilities for unforeseen situations.

It is clear that the integrated approach to system design involves a combination of at least the following:

(a) problem analysis,

(b) problem reformulation in the light of available or anticipated technology, and

(c) a determined attempt to foresee types of interactions that may develop in the future.

Furthermore, since we are thinking of large and complex organizations, there will usually be a need to bring together several different fields of specialized knowledge and experience.

A technologist, an engineer who is developing the applications of technology, or an engineer who is designing system hardware, may fail to make a proper contribution to integrated system design if he has not been made fully aware of the nature of management problems, of all the types of information that may be needed by task units, or of all the pitfalls of human communication that must be circumvented. Similarly managers, management research teams concerned with information for decision making, and experts on human communication may fail to make their proper contributions if they have no contact with the world of technological development.

As it has been presented in this paper, the notion of bulding latent capability into the design of a tactical information system is in an embryonic and as yet unproven stage. The intention, however, has been to show that further study in this general area may prove very much worthwhile for many non-military organizations, as well as for the military. It is suggested that the provision of latent capabilities for tactical decision making will become a very real possibility if broad experience and knowledge in applications engineering, engineering system design, and advanced technology can be brought together with expertise in the Management/Information/Communication field.

APPENDIX

SOME ASPECTS OF THE SATI CONCEPT

The SATI concept was developed for military situations in which participating task units may be widely dispersed and mobile. Nowadays it is practical to transmit digital messages over long distances at speeds well in excess of 1,000,000 bits per second, whereas the standard speed for a teletype transmission is only 75 bits per second. Furthermore, large-scale integration of microminiature electronics, combined with mass-production techniques, make it reasonable to design a communication system in which individual subscribers will have digital equipment capable of storing information and performing repetitive logical functions (such as the automatic rejection of all but a few wanted messages on a digital broadcast transmission that carries thousands of messages.) Developments such as these challenge current communications methods, standards, and philosophy.

To serve a Joint Task Force in a limited war environment, it seemed appropriate that the main net of Figure 2 should be a two-channel radio repeater net, in which messages from the first-stage transfer boxes go to a central repeater on one radio frequency and are retransmitted on a second radio frequency which is monitored by all the first-stage access boxes.

Since messages are to be transmitted on the main net in digital form, the transfer boxes will need means of converting information into a stream of binary bits (ones or zeros). Let us first consider very short coded messages, and to illustrate principles, let us suppose that such a message is recorded on a standard 80-column punched card, using a prearranged format. The information punched on the card can be converted

into a stream of bits for radio transmission in many ways. A standard method is to represent the letter, number, or other symbol in each column by an 8-bit ASCII code.* In this case, the content of an 80-column card can be represented by a stream of 640 bits. At a transmission rate of one million bits per second, which is not very high by modern standards, it would be possible to transmit more than one thousand cards per second over the main net. Times of transmission would be assigned by the computerized Net Control Element in such a manner that no two card transmissions could overlap.

Now let us suppose that the first field of each card contains a receiving code, and that the next few fields are used to indicate the category to which the card belongs and the nature of its information content. This permits the access box equipment to be so designed that each task unit (by applying tests to the content of the first few fields) will reject cards that it is not authorized to receive and any other cards that it does not want to receive, selecting only wanted cards. As has already been stated, the mass-production techniques associated with Large Scale Integration (LSI) of microminiature electronics will make it practical in a few years' time to supply individual task units with digital devices capable of performing the simple repetitive logic of the selection process. Thus engineering development and design studies could provide a highly flexible system of group communication for tactical information contained in short coded messages.

The necessary time sharing of net capacity is greatly facilitated by the use of relatively short digital blocks for all types of message

*ASCII stands for American Standard Code for Information Interchange.

transmission. Time on the main net can then be subdivided into a very large number of very small time slots, each capable of handling the transmission of one short digital block. The net control element assigns these time slots to the many task units, making sure that no two block transmissions will occur in the same time slot.

It is probable that, in ten years or so, good quality speech digitizers will become available at a reasonable price. When this happens, it will be possible for a first-stage task unit to transmit a spoken message on the main net (Figure 2) in the form of a series of short blocks of bits. The net control element would assign a series of time slots for each such transmission, and it is not unreasonable to suppose that the main net could handle over 300 simultaneous voice transmissions without any mutual interference. The first block of each voice transmission would contain a coded "selection indicator" which would enable each authorized task unit to select the voice messages that it wishes to receive. Similar techniques could be applied to teletype, to digitized pictures, and to digital data. Furthermore, many critical messages require only a few hundred bits, as opposed to the 640 bits that would be derived from a full punched card. Thus the SATI concept offers one uniform general-purpose system that would be capable of handling many different types of traffic simultaneously. The total system capacity could be divided among the various types according to current needs. Indeed, when all its aspects are taken into account, the SATI concept has so much latent capability that it could come close to satisfying any set of information exchange requirements that can be clearly formulated by command or management.

Security Classification

14. KEY WORDS	LINK A ROLE	LINK A WT	LINK B ROLE	LINK B WT	LINK C ROLE	LINK C WT
COMMAND AND CONTROL						
DECISION MAKING						
INFORMATION SYSTEMS						
INFORMATION THEORY						
MANAGEMENT						
MILITARY COMMUNICATIONS						
MILITARY OPERATIONS						
MULTICHANNEL COMMUNICATION						
SATI						
SELECTIVE ACCESS TO TACTICAL INFORMATION						
SYSTEMS ENGINEERING						
TACTICAL COMMAND AND CONTROL						

Security Classification