AD 730871

NAVAL SHIP RESEARCH AND DEVELOPMENT CENTER
DEPARTMENT OF THE NAVY
CONTRACT NONR-220(51)

FINAL REPORT

THEORY OF OPTIMUM SHAPES IN FREE-SURFACE FLOWS

BY

T. YAO-TSU WU
ARTHUR K. WHITNEY

DDC
OCT 6 1971
B

DIVISION OF ENGINEERING AND APPLIED SCIENCE
CALIFORNIA INSTITUTE OF TECHNOLOGY
PASADENA, CALIFORNIA

Reproduced by
NATIONAL TECHNICAL
INFORMATION SERVICE
Springfield, Va. 22151

REPORT NO. E132F.1

JUNE 1971

Unclassified

Security Classification

DOCUMENT CONTROL DATA - R & D

(Security classification of title, body of abstract and indexing annotation must be entered when the overall report is classified)

1. ORIGINATING ACTIVITY *(Corporate author)* California Institute of Technology Division of Engineering and Applied Science	2a. REPORT SECURITY CLASSIFICATION Unclassified 2b. GROUP Not applicable

3. REPORT TITLE

Final Report. Theory of Optimum Shapes in Free-Surface Flows

4. DESCRIPTIVE NOTES *(Type of report and inclusive dates)*

Final Technical Report

5. AUTHOR(S) *(First name, middle initial, last name)*

Whitney, Arthur K.
Wu, T. Yao-tsu

6. REPORT DATE June 1971	7a. TOTAL NO. OF PAGES 85	7b. NO. OF REFS 19
8a. CONTRACT OR GRANT NO. Nonr-220(51) b. PROJECT NO. c. d.	9a. ORIGINATOR'S REPORT NUMBER(S) E-132F.1 9b. OTHER REPORT NO(S) *(Any other numbers that may be assigned this report)*	

10. DISTRIBUTION STATEMENT

This document has been approved for public relase and sale; its distribution is unlimited.

11. SUPPLEMENTARY NOTES	12. SPONSORING MILITARY ACTIVITY Naval Ship System Command Naval Ship Research and Development Center, Office of Naval Research

13. ABSTRACT

This ~~technical~~ report consists of three parts. Part I investigates the mathematical theory of variational calculus for the general problem of optimum hydromechanical shapes in a wide class of free surface flows. In Part II the general theory is applied to determine the optimum shape of a two-dimensional planing surface that produces the maximum lift. In Part III the optimum shape of a symmetric two-dimensional strut is determined so that the drag of this strut in infinite cavity flow is a minimum.

DD FORM 1 NOV 65 1473 (PAGE 1)

S/N 0101-807-6801

Unclassified

Security Classification

Unclassified
Security Classification

14 KEY WORDS	LINK A ROLE	LINK A WT	LINK B ROLE	LINK B WT	LINK C ROLE	LINK C WT
Variational calculus						
Singular Integral Equation						
Planing Surface						
Cavity Flow						
Cavitating Hydrofoil						

DD FORM 1 NOV 65 1473 (BACK)
(PAGE 2)

Unclassified
Security Classification

Division of Engineering and Applied Science
California Institute of Technology
Pasadena, California

FINAL REPORT

Theory of Optimum Shapes in Free-Surface Flows

Contract Nonr-220(51)

by

T. Yao-tsu Wu
Arthur K. Whitney

This research was carried out under the Naval Ship System Command
General Hydrodynamics Research Program
and Hydrofoil Advanced Development Program
Administered by the Naval Ship Research and Development Center.

Prepared under Contract Nonr-220(51)

This document has been approved for public
release and sale; its distribution is unlimited.

Report No. E132F.1 June 1971

Theory of Optimum Shapes in Free-Surface Flows

Table of Contents

	Page
Part I - Variational Calculus Involving Singular Integral Equations - by T. Yao-tsu Wu and Arthur K. Whitney	1
Part II - Optimum Profile of Sprayless Planing Surface - by T. Yao-tsu Wu and Arthur K. Whitney	31
Part III - Minimum Drag Profiles in Infinite Cavity Flow - by Arthur K. Whitney	56

THEORY OF OPTIMUM SHAPES IN FREE-SURFACE FLOWS

PART I

Variational Calculus Involving Singular Integral Equations

by

T. Yao-tsu Wu and Arthur K. Whitney

California Institute of Technology
Pasadena, California

The general problem of optimum hydromechanical-shapes arising in a wide class of free surface flows can be characterized mathematically as equivalent to the extremization of a functional of the form

$$I[u] = \int_{-1}^{1} f(u(x),\ v(x),\ x)dx$$

where f is an arbitrary function which is, in general, nonlinear in u, v, x, and the unknown argument functions $u(x)$ and $v(x)$ are related by the singular Cauchy integral

$$v(x) = \frac{1}{\pi}\oint_{-1}^{1} \frac{u(t)dt}{t-x} \qquad (|x| < 1) \quad .$$

Application of the variational method to $I[u]$ yields, in analogy to the Euler differential equation in the classical theory, the following singular integral equation of the Cauchy type

$$f_u(u(x),\ v(x), x) = \frac{1}{\pi}\oint_{-1}^{1} \frac{f_v(u(t), v(t), t)}{t - x}\, dt \quad (|x| < 1) \quad ,$$

where $f_u \equiv \partial f/\partial u$ and $f_v \equiv \partial f/\partial v$. This equation, which is a necessary condition for the existence of an extremal $I[u]$, combines with the integral definition of $v(x)$ to give a pair of singular integral equations, which are to

be solved for u, v under appropriate end conditions and, possibly under additional isoperimetric constraints. Consideration of the second variation of I leads to the inequality

$$f_{uu}(u,v,x) + f_{vv}(u,v,x) \geqslant 0 \qquad (|x| < 1)$$

as a necessary condition for the extremum of I to be a minimum.

Analytical solutions by the method of singular integral equations and some approximate methods by Fourier series expansions are discussed for the linearized theory. The general features of these solutions are demonstrated by numerical examples.

1. Introduction

In recent studies undertaken by the authors it has been observed that the determination of the optimum hydromechanical shape of a body in a free surface flow invariably results in a new class of variational problems, in which the unknown functions are related, not by differential equations as in the classical calculus of variations, but by a singular integral equation of the Cauchy type. These recent studies include the following problems: (i) the optimum shape of a plate planing on a water surface; (ii) the body profile of minimum pressure drag in symmetric cavity flows; and, (iii) the cavitating hydrofoil having a maximum lift-drag ratio under a set of isoperimetric constraints. Indeed, the physical problems belonging to this class embrace a wide range of interest. Closely related examples are numerous, such as: (iv) the optimum circulation distribution of a lifting line in the aerodynamic wing theory; (v) the hull shape of a thin ship which has minimum wave resistance; and, (vi) a class of mixed-type boundary problems pertaining, but not limited to elliptic partial differential equations. Only a few special cases from this general class of problems have been solved, the optimum lifting line being an outstanding example.

There are several essential differences between the classical theory and this new class of variational problems. First of all, the "Euler equation" which results from the consideration of the first variation of the

functional in this new class is a singular integral equation of the Cauchy type which is, in general, nonlinear. This is in sharp contrast to the Euler differential equation in the classical theory. Another noteworthy feature of this new class of variational problems is that while regular behavior of solution at the limits of the integral equation may be necessary on physical grounds, the mathematical conditions which insure such behavior generally involve functional equations which are difficult, and sometimes simply impossible, to satisfy.

Because of these difficulties and the fact that only very limited techniques are known for solving nonlinear singular integral equations, a theory for this new type of variational problems has not been fully developed. Attempts are made here to present some preliminary results of this study. After the problem is stated in its general form, the variational methods are applied in Section 3 to derive two necessary conditions of optimality of the functional from the considerations of the first and second variations. They correspond, respectively, to the Euler differential equation and the Legendre condition in the classical theory.

Following the general formulation, solutions of the singular integral equations are sought for the linear case when the functional is a quadratic form in its argument functions - - a case which seems to be the least difficult, and is expected to retain the important features of the corresponding nonlinear problems. It is of interest to note that the linear problem can always be converted to a Fredholm integral equation of the second kind, for which a well-developed theory is available. Moreover, when the coefficients of the linear integral equations satisfy certain relationships, analytical solutions have been obtained in closed form, by the method of singular integral equations. To aid practical applications, an approximate method (which is essentially the Rayleigh-Ritz method) employing a discretized Fourier series representation of the desired solution is discussed, and the results are compared with some known exact solutions.

2. Statement of the Problem

The general optimum problem considered here may be stated as follows: To find the real, extremal function $u(x)$ of a real variable x,

required to be Hölder continuous† in the region $-1 < x < 1$, together with its finite Hilbert transform

$$v(x) = \frac{1}{\pi} \oint_{-1}^{1} \frac{u(t)dt}{t-x} \equiv H_x[u] \qquad (-1 < x < 1) \quad , \tag{1}$$

where the integral with symbol C signifies its Cauchy principal value, so that u and v minimize the functional

$$J[u] = \int_{-1}^{1} f_o(u(x), v(x), x)dx \quad , \tag{2}$$

satisfy M isoperimetric constraints

$$J_\ell[u] = \int_{-1}^{1} f_\ell(u(x), v(x), x)dx = \text{const.} = C_\ell \qquad (\ell = 1, 2, \ldots, M) \tag{3}$$

and satisfy the conditions near the end points $x = \pm 1$,

$$u(x) = u_*(x)/(x-c_k)^{\alpha_k + i\beta_k} \quad , \qquad 0 \leqslant \alpha_k < 1 \qquad (k = 1, 2) \quad , \tag{4}$$

where $c_1 = -1$, $c_2 = 1$, $i = \sqrt{-1}$, α_k and β_k are real constants and $u_*(x)$ satisfies the $\mathcal{H}$-condition† near and at c_k. If u is required to vanish at $x = \pm 1$, the end condition

$$u(-1) = 0 \qquad \text{and/or} \qquad u(1) = 0 \tag{5}$$

is a special case of (4) when $u_*(\pm 1) = 0$ and $u_*(x)$ satisfies the $\mathcal{H}(\mu > \alpha_k)$-condition. The fundamental function f_o and the constraint functions f_ℓ are assumed to be at least twice continuously differentiable with respect to their arguments u and v, and continuous in x, but are otherwise

---

† A function u(x) is said to satisfy the Hölder $\mathcal{H}(\mu)$-condition on path $L(-1 < x < 1)$ if, for any two points x_1, x_2 of L, $|u(x_2)-u(x_1)| \leqslant A|x_2-x_1|^\mu$, where A and μ are positive real constants. A is called the Hölder constant and μ the Hölder index.

arbitrary. The notation $H_x[u]$ for the finite Hilbert transform of u, as defined in (1), will be used throughout. It may be remarked here that the solution of a maximum problem can be deduced from this minimum one by changing the sign of the fundamental function in (2).

The Hölder condition $\mathcal{H}(\mu)$ on $u(x)$, with specific index μ, and the end conditions (4), or (5), are generally required on physical grounds. Analytically, it is known (see, e.g., Muskhelishvili 1953, §20) that if the Hölder index of u is $\mu < 1$, then $v(x)$ given by (1) is also Hölder continuous for $-1 < x < 1$, with $\mu < 1$. In addition, near the end points $x = \pm 1$,

$$v(x) \simeq \mp u(\mp 1)\log(x \pm 1) + v_*(x) \qquad (\alpha + i\beta = 0, \quad u(\mp 1) \neq 0) \quad , \tag{6}$$

$$\simeq \pm (\cot(\alpha + i\beta)\pi) u_*(\pm 1)/(x \mp 1)^{\alpha + i\beta} + v_*(x) \qquad (\alpha + i\beta \neq 0) \quad , \tag{7}$$

where $v_*(x)$ satisfies the $\mathcal{H}$-condition near and at $c = -1$ or 1 in the case of (6) and also in the case of (7) if $\alpha = 0$; however, for $0 < \alpha < 1$ in (7), $v_*(x) = v_{**}(x)|x - c|^{-\alpha_o}$, with $\alpha_o < \alpha$ and $v_{**}(x)$ satisfies the $\mathcal{H}$-condition. Thus, $v(\pm 1)$ will be bounded either when $u(\pm 1) = 0$ or when $\alpha = \frac{1}{2}$, $\beta = 0$. If both $u(\pm 1)$ and $v(\pm 1)$ are required to be bounded, condition (5) must be enforced.

The original problem is equivalent to the minimization of a new functional

$$I[u] = \int_{-1}^{1} f(u(x), v(x), x; \lambda_1, \lambda_2, \ldots, \lambda_M) dx \quad , \tag{8}$$

with

$$f(u, v, x; \lambda_1, \ldots, \lambda_M) = f_o(u, v, x) - \sum_{\ell=1}^{M} \lambda_\ell [f_\ell(u, v, x) - C_\ell] \quad , \tag{9}$$

where $u(x)$, $v(x)$ are related by (1), $\lambda_1, \ldots, \lambda_M$ are undetermined Lagrange multipliers. We define an admissible function as any function $u(x)$ which satisfies the Hölder condition $\mathcal{H}(\mu < 1)$, the isopermetric constraints (3), as well as the prescribed end conditions (4) or (5); and we define the optimal function as an admissible function which minimizes the functional $I[u]$.

3. The Necessary Conditions of Optimality

Let $u(x)$ denote the required optimal function. A function δu will be called an admissible variation if, for all sufficiently small positive constant ϵ, $u_1(x) = u(x) + \epsilon\,\delta u(x)$ is an admissible function. The variation in v which corresponds to an admissible variation δu, such that $v_1(x) = v(x) + \epsilon\,\delta v = H_x[u_1] = H_x[u + \epsilon\,\delta u]$, is found from (1) to be the Hilbert transform of δu,

$$\delta v(x) = H_x[\delta u] \qquad (-1 < x < 1) \quad . \tag{10}$$

If δu is an admissible variation, then $I[u+\epsilon\,\delta u]$ is a function of ϵ which has an extreme value when $\epsilon = 0$.

The variation of the functional I due to the variations δu and δv is

$$\Delta I = \int_{-1}^{1} f(u+\epsilon\,\delta u,\ v+\epsilon\,\delta v,\ x)dx - \int_{-1}^{1} f(u,v,x)dx \quad . \tag{11}$$

For sufficiently small ϵ, expansion of the above integrand in Taylor's series yields

$$\Delta I = \epsilon\,\delta I + \frac{\epsilon^2}{2}\,\delta^2 I + \frac{\epsilon^3}{3!}\,\delta^3 I + \ldots , \tag{12}$$

where the first variation δI and the second variation $\delta^2 I$ are

$$\delta I[u,\delta u] = \int_{-1}^{1} (f_u\,\delta u + f_v\,\delta v)dx \quad , \tag{13}$$

$$\delta^2 I[u,\delta u] = \int_{-1}^{1} [f_{uu}(\delta u)^2 + 2f_{uv}\,\delta u\,\delta v + f_{vv}(\delta v)^2]\,dx \quad , \tag{14}$$

in which the subindices denote partial differentiations, and δv is given by (10). The variations δI, $\delta^2 I$, . . . depend on δu as well as u. For $I[u]$ to be minimum, we must have for all admissible variations δu,

$$\delta I[u,\delta u] = 0 \quad , \tag{15a}$$

and

$$\delta^2 I[u, \delta u] \geqslant 0 \quad . \tag{15b}$$

Equation (15a) assures that I is extremal, and with the inequality (15b), I is therefore a minimum.

As δu and δv are related by (10), substitution of (10) in (13) reduces (15a) to

$$\delta I = \int_{-1}^{1} (f_u - H_x[f_v])\delta u(x)dx = 0 \tag{16}$$

after interchanging the order of integration, which is permissible (see, e.g., Tricomi 1957, §4.3) if the functions $f_v(u, v, x)$ and $\delta u(x)$ belong to the classes L_{p_1} and L_{p_2}, respectively (in the basic interval $-1 \leqslant x \leqslant 1$), and if

$$p_1^{-1} + p_2^{-1} \leqslant 1 \quad . \tag{17}$$

This condition will be tacitly assumed to be satisfied. Since $\delta u(x)$ is otherwise arbitrary, the factor in the parenthesis of the integrand in (16) must vanish identically for $|x| \leqslant 1$, giving the following singular integral equation of the Cauchy type,

$$f_u(u(x), v(x), x) = H_x[f_v] = \frac{1}{\pi} \oint_{-1}^{1} \frac{f_v(u(t), v(t), t)}{t - x} \, dt \quad (|x| \leqslant 1) \quad . \tag{18}$$

This integral equation is analogous to the Euler differential equation in the classical theory of calculus of variations when the fundamental function is of the form $f = f(y(x), dy/dx, x)$. Equation (18) is generally non-linear in $u(x)$ and $v(x)$ unless f is a polynomial of second degree in u and v. The extremal solution is determined by solving the pair of coupled singular integral equations, (18) and (1), under conditions (3) and (4). Satisfaction of (18) is a necessary condition for the existence of an extremum of $I[u]$.

We now suppose that (18), (1), (3) and (4) can be solved for an extremal function $u(x; C_1, \ldots, C_M)$, which involve the constants of constraint $C_1, \ldots, C_M$, as parameters. Under what condition does this extremal solution satisfy the inequality (15b), so that it actually provides

a minimum of $I[u]$?

In order to answer this question, we examine the second variation $\delta^2 I$. Consider the case in which $f_{uu}(u,v,x)$, $f_{uv}(u,v,x)$, $f_{vv}(u,v,x)$ and $\delta u(x)$ are all Hölder continuous on $(-1,1)$, and they belong, respectively, to the classes L_{p_k}, with p_k so limited that interchange of the order of the following integrations can be justified (see (17)). The second term on the right-hand side of (14) can then be written as

$$2\int_{-1}^{1} f_{uv}(u,v,x)\delta u(x)\delta v(x)dx = 2\int_{-1}^{1} f_{uv}(u,v,x)\delta u(x)H_x[\delta u(t)]\,dx$$

$$= -2\int_{-1}^{1} H_x[f_{uv}(u,v,t)\delta u(t)]\,\delta u(x)dx$$

$$= \frac{1}{\pi}\int_{-1}^{1}\oint_{-1}^{1} \frac{f_{uv}(u(x),v(x),x)-f_{uv}(u(t),v(t),t)}{t-x}\,\delta u(t)\delta u(x)dt\,dx \quad .$$

The first step follows from substitution of (10), the second step is a result of interchanging the order of integration, and the last step is the mean of the two preceding lines. By similar operations, the third term in (14) can be written

$$\int_{-1}^{1} f_{vv}(u,v,x)[\delta v(x)]^2dx = \int_{-1}^{1} f_{vv}(u,v,x)H_x[\delta u(t)]\,H_x[\delta u(s)]\,dx$$

$$= -\int_{-1}^{1} H_x[f_{vv}(u,v,t)H_t[\delta u(s)]\,]\,\delta u(x)dx$$

$$= \int_{-1}^{1}\left\{f_{vv}(u,v,x)\delta u(x) + \frac{1}{\pi}\int_{-1}^{1} \frac{H_x[f_{vv}]-H_t[f_{vv}]}{t-x}\,\delta u(t)dt\right\}\delta u(x)dx \quad ,$$

where, in the last step, use has been made of the Poincaré-Bertrand formula,

$$\frac{1}{\pi^2}\oint_a^b \frac{dt}{t-x}\oint_a^b \frac{\varphi(t,s)}{s-t}\,ds = -\varphi(x,x) + \frac{1}{\pi^2}\int_a^b ds \oint_a^b \frac{\varphi(t,s)dt}{(t-x)(s-t)} \qquad (a < x < b) \tag{19}$$

(see, e.g., Muskhelishvili 1953, §23). Combining the above results, (14) becomes

$$\delta^2 I = \int_{-1}^{1} g(x)\{\delta u(x)\}^2\,dx - \frac{1}{\pi}\int_{-1}^{1}\int_{-1}^{1} \frac{h(t)-h(x)}{t-x}\,\delta u(t)\delta u(x)dt\,dx \quad , \tag{20a}$$

where

$$g(x) = f_{uu}(u(x),v(x),x) + f_{vv}(u(x),v(x),x) \quad , \tag{20b}$$

$$h(x) = f_{uv}(u(x),v(x),x) + H_x[f_{vv}(u(s),v(s),s)] \quad . \tag{20c}$$

Since f_{uu}, f_{uv} and f_{vv} are assumed to be Hölder continuous in $(-1,1)$, $g(x)$ and $h(x)$ are also Hölder continuous in this interval (with the possible exception of those end points at which $f_{vv}(u,v,x) \neq 0$); i.e., for any two points x_1, x_2 in the open interval $(-1,1)$,

$$|g(x_2) - g(x_1)| \leqslant A_1|x_2 - x_1|^{\mu_1} \qquad (0 \leqslant \mu_1 < 1,\ A_1 > 0) \quad , \tag{21a}$$

$$|h(x_2) - h(x_1)| \leqslant A_2|x_2 - x_1|^{\mu_2} \qquad (0 \leqslant \mu_2 < 1,\ A_2 > 0) \quad . \tag{21b}$$

Now consider a special choice of $\delta u(x)$,

$$\delta u(x) = BU(\xi) \quad , \qquad \xi = (x - x_o)/\epsilon \quad , \tag{22a}$$

where $U(\xi)$ is Hölder continuous and

$$0 < U(\xi) \leqslant 1 \qquad (|\xi| < 1, \text{ or } |x - x_o| < \epsilon) \quad , \tag{22b}$$

$$U(\xi) \equiv 0 \qquad (|\xi| > 1, \text{ or } |x - x_o| > \epsilon) \quad . \tag{22c}$$

x_o is any fixed point in the open interval $(-1, 1)$, and ϵ is arbitrarily small so that $|x_o \pm \epsilon| < 1$. B, the bound of $\delta u(x)$, is either positive or

negative, and is chosen so small that $\delta^3 I$, $\delta^4 I$, etc., can be neglected in comparison with $\delta^2 I$. (For instance, $B = 0(\epsilon^{\alpha})$, $\alpha > 0$, will be sufficient; the explicit form of $U(\xi)$ is immaterial.) With this choice of δu, (20) can be written, by adding and subtracting a term, as

$$\delta^2 I = g(x_o)B^2 \int_{x_o-\epsilon}^{x_o+\epsilon} U^2(\xi)dx + R = g(x_o)B^2\epsilon \int_{-1}^{1} U^2(\xi)d\xi + R \quad , \tag{23a}$$

where

$$R = \int_{x_o-\epsilon}^{x_o+\epsilon} \left\{ [g(x)-g(x_o)]\delta u(x) - \frac{1}{\pi}\int_{x_o-\epsilon}^{x_o+\epsilon} \frac{h(t)-h(x)}{t-x}\,\delta u(t)dt \right\} \delta u(x)dx \quad . \tag{23b}$$

Using the inequalities (21), (22b, c), we obtain the bound for the remainder R as

$$|R| \leqslant A_1 B^2 \epsilon^{1+\mu_1} \int_{-1}^{1} |\xi|^{\mu_1} U^2(\xi)d\xi + A_2 B^2 \epsilon^{1+\mu_2} \int_{-1}^{1}\int_{-1}^{1} |\eta-\xi|^{\mu_2-1} U(\xi)U(\eta)d\xi\, d\eta$$

$$\leqslant \left(\frac{2A_1B^2}{1+\mu_1}\right)\epsilon^{1+\mu_1} + \left(\frac{2A_2B^2}{\mu_2(1+\mu_2)}\right)(2\epsilon)^{1+\mu_2} \quad . \tag{23c}$$

In the limit as $\epsilon \to 0$, the first term on the right-hand side of (23a) dominates, hence a necessary condition for $\delta^2 I > 0$ is that $g(x_o) > 0$ for every $x_o \in (-1, 1)$, or

$$f_{uu}(u(x), v(x), x) + f_{vv}(u(x), v(x), x) > 0 \qquad (-1 < x < 1) \quad . \tag{24}$$

This condition, first derived by one of the authors (AKW 1969), is analogous to the Legendre condition in the classical theory of the variational calculus.

Equation (24) is a <u>necessary condition</u> to be satisfied by a minimizing function. A weaker form of this necessary condition is $f_{uu} + f_{vv} \geqslant 0$, meaning that the second variation $\delta^2 I > 0$ is still ensured if $(f_{uu} + f_{vv})$ vanishes at a discrete number of points of the extremal function but is positive everywhere else.

It may also be noted, by analogy with classical variational problems,

(see, e.g. Courant and Hilbert (1953), Chap. IV, §6), that strict inequality in (24) is not a sufficient condition for a minimum. To find a sufficient condition we expand $I[u+\epsilon\delta u]$ by Taylor's theorem with a remainder after two terms. Thus,

$$I[u+\epsilon\delta u] = I[u] + \epsilon\delta I[u,\delta u] + \frac{\epsilon^2}{2}\delta^2 I[u+\eta\epsilon\delta u,\delta u] \qquad (0<\eta<1) \quad .$$

If u is an extremal function, i.e., $\delta I[u,\delta u] = 0$, then

$$I[u+\epsilon\delta u] - I[u] = \frac{\epsilon^2}{2}\delta^2 I[u+\eta\epsilon\delta u,\ \delta u] \qquad (0<\eta<1) \quad .$$

Now suppose that inequality (15b) holds not just for the extremal u, but for all admissible functions u. Then we may set $\epsilon = 1$ in the above equation to give the condition

$$I[u+\delta u] - I[u] = \frac{1}{2}\delta^2 I[u+\eta\delta u,\ \delta u] > 0 \qquad (0<\eta<1) \quad ,$$

which is sufficient to show that the extremal u actually minimizes I.

Based on the foregoing argument, a sufficient condition for a minimum is that the quadratic form, in δu and δv, in the integral representation (14) of $\delta^2 I$ be positive definite for all admissible u and δu (and hence all admissible v and δv by (7) and (10)), that is

$$f_{uu} > 0, \qquad \text{and} \qquad f_{uu}f_{vv} - f_{uv}^2 > 0 \qquad (-1<x<1) \qquad (25)$$

for all admissible u and v. This simple but rough sufficient criterion is a more restrictive inequality than (24).

4. Quadratic Functions; the Fredholm Integral Equation

The least difficult case of the extremal problems in this general class is when $I[u]$ is a quadratic functional, or when f in (8) is quadratic in u and v, since the integral equation (18) is then linear in u and v. It is instructive to investigate this case first, since the system of singular integral equations (18) and (1) can then be reduced to a single Fredholm integral equation of the second kind, or, in certain special cases, the

method of singular integral equations can be employed to obtain an analytical solution in a closed form. These solutions provide a basis for comparison with some approximate methods which may have a general utility for more complicated non-linear problems. Moreover, the linear formulation can often be used as a first approximation of an originally non-linear problem with appropriate modification of the isoperimetric constraints.

Let the functions f_o and f_ℓ in (2) and (4) be given by

$$f_o(u,v,x) = a_o u^2 + 2b_o uv + c_o v^2 + 2p_o u + 2q_o v \quad , \tag{26a}$$

$$f_\ell(u,v,x) = a_\ell u^2 + 2b_\ell uv + c_\ell v^2 + 2p_\ell u + 2q_\ell v \quad (\ell = 1, 2, \ldots M) \quad ; \tag{26b}$$

the coefficients $a_o, b_o, c_o, \ldots, q_M$ are known functions of x, assumed to be Hölder continuous (with index $0 < \mu < 1$) in $(-1, 1)$. Then the function f in (8) becomes

$$f(u,v,x) = au^2 + 2buv + cv^2 + 2pu + 2qv \quad , \tag{27}$$

where

$$a(x) = a_o(x) - \sum_{\ell=1}^{M} \lambda_\ell a_\ell(x) \quad , \qquad \text{etc.} \tag{28}$$

The integral equation (18) now reads

$$a(x)u(x) + b(x)v(x) + p(x) = H_x[bu + cv + q] \qquad (|x| < 1) \quad . \tag{29}$$

The necessary condition (24), obtained from the consideration of the second variation, becomes

$$a(x) + c(x) > 0 \qquad (|x| < 1) \quad , \tag{30}$$

which can be checked only when the λ's in (28) are determined.

The coupled integral equations (29) and (1), both of the Cauchy type, can always be reduced, under certain assumptions, to a Fredholm integral equation of the second kind, with a regular, symmetric kernel.

The required assumptions are that the coefficients $a, b, \ldots, q$, as well as the solution u, v, are Hölder continuous on $(-1,1)$, and that $c(x)$ and $u(x)$ belong to the classes L_{p_1} and L_{p_2}, respectively, in the closed interval $[-1,1]$, with p_1 and p_2 satisfying (17). In fact, substitution of (1) in (29) yields

$$a(x)u(x) + b(x)H_x[u] - H_x[bu] - H_x[c(t)H_t[u]] = H_x[q] - p(x) \quad . \tag{31}$$

The second and third terms on the left side of (31) combine to give

$$b(x)H_x[u] - H_x[bu] = -\frac{1}{\pi}\int_{-1}^{1} \frac{b(t)-b(x)}{t-x}\, u(t)dt \quad .$$

Under the aforementioned assumptions, the last term on the left side of (31) can be rewritten, using the Poincaré-Bertrand formula (19), as

$$-H_x[c(t)H_t[u]] = c(x)u(x) + \frac{1}{\pi^2}\int_{-1}^{1} u(t)dt \oint_{-1}^{1} \frac{c(s)ds}{(s-t)(s-x)} \quad .$$

Thus, (31) reduces to

$$\{a(x)+c(x)\}u(x) + \int_{-1}^{1} K(t,x)u(t)dt = H_x[q] - p(x) \qquad (|x| < 1) \quad , \tag{32a}$$

where

$$K(t,x) = -\frac{1}{\pi}\frac{b(t)-b(x)}{t-x} + \frac{1}{\pi^2}\oint_{-1}^{1} \frac{c(s)ds}{(s-t)(s-x)} \quad . \tag{32b}$$

If we assume that condition (30) is satisfied, we may define a new variable

$$\tilde{u}(x) = \{a(x) + c(x)\}^{\frac{1}{2}} u(x) \quad , \tag{33}$$

in terms of which (32a, b) become

$$\tilde{u}(x) + \int_{-1}^{1} \tilde{K}(t,x)\tilde{u}(t)dt = \{a(x) + c(x)\}^{-\frac{1}{2}}\{H_x[q] - p(x)\} \qquad (|x| < 1) \quad , \tag{34a}$$

with

$$\tilde{K}(t,x) = \{a(t) + c(t)\}^{-\frac{1}{2}} \{a(x) + c(x)\}^{-\frac{1}{2}} K(t,x) \quad . \tag{34b}$$

This is a Fredholm integral equation of the second kind, with a regular symmetric kernel, for which a well-developed theory is available. The kernel and the right-hand side of (34a) will, in general, contain unknown Lagrange multipliers. Ideally, the integral equation can be solved first for arbitrary values of λ_ℓ's, which can then be determined by the M constraints (4). Finally, condition (30) should be checked.

5. Analytical Solutions by the Method of Singular Integral Equations

In the general case when the coefficients a, b, and c are arbitrary functions of x, the solution of the system of singular integral equations (29), (1) has not been found in closed form (for a general discussion, see Muskhelishvili 1953, Part IV). However, when the coefficients a, b, c satisfy certain conditions, the system of equations (29) and (1) can be reduced in succession to a single singular integral equation of the Carleman type, which can be solved in turn by known methods, yielding the final solution in closed form. These analytical solutions are of great interest, since in their construction there are definite degrees of freedom for choosing the strength of the singularity of the solution u(x) at the end points $x = \pm 1$. With these possibilities, the singular behavior of u and v near $x = \pm 1$ can be explicitly analysed. The following are several cases of fairly general interest.

Case I

$$a(x) + c(x) > 0, \qquad b(x) = b_o \pm (ac)^{\frac{1}{2}}, \qquad (|x| < 1) \quad , \tag{35}$$

where b_o is a constant, and the function $(ac)^{\frac{1}{2}}$ stands for a definite (say positive) branch. The first condition of (35) is just the necessary condition (30) for the optimality. b(x) assumes either of the two expressions.

Multiplying (1) by b_o and subtracting it from (29), we obtain

$$a^{\frac{1}{2}}\varphi_\pm(x) = H_x[\pm c^{\frac{1}{2}}\varphi_\pm] + \psi(x) \qquad (|x| < 1) \quad , \tag{36a}$$

where

$$\varphi_{\pm}(x) = a^{\frac{1}{2}}u \pm c^{\frac{1}{2}}v \quad , \qquad \psi(x) = H_x[q] - p(x) \quad . \tag{36b}$$

In (36), the upper (+) sign is for $b = b_o + (ac)^{\frac{1}{2}}$, and the lower (-) sign for $b = b_o - (ac)^{\frac{1}{2}}$. We note that the two cases in (35) are the only form of b for which (29), with the aid of (1), can be reduced to an equation for a single variable ϕ_+ or ϕ_-. Now, (36) is a singular integral equation of the Carleman type, the general solution of which is known (see, e.g., Muskhelishvili 1953, Tricomi 1955). The solution of (36) is found to be

$$\varphi_{\pm}(x) = \frac{a^{\frac{1}{2}}\psi(x)}{a+c} \pm \frac{Z_{\pm}(x)}{a+c}\left\{\frac{1}{\pi}\oint_{-1}^{1} \frac{c^{\frac{1}{2}}(t)\psi(t)dt}{Z_{\pm}(t)(t-x)} + P_m^{\pm}(x)\right\} \quad (|x| < 1) \tag{37}$$

where P_m^+ and P_m^- are polynomials in x of degree m,

$$Z_{\pm}(x) = (1+x)^{n_1}(1-x)^{n_2}(a+c)^{\frac{1}{2}}\exp\{\pm\Gamma(x)\} \quad , \tag{38a}$$

$$\Gamma(x) = \frac{1}{2i} H_x[\log G(t)] \quad , \qquad G(x) = (a^{\frac{1}{2}}+ic^{\frac{1}{2}})/(a^{\frac{1}{2}}-ic^{\frac{1}{2}}) \quad , \tag{38b}$$

and n_1, n_2 are integers to be chosen, together with integer m, according to the following rule. The function $\log G(x)$ stands for a definite branch (say its principal branch) and is one-valued on $[-1,1]$. Since a and c are assumed to be Hölder-continuous and since $a + c > 0$ on $[-1,1]$, clearly $G(x) \neq 0, \infty$. Consequently, $\Gamma(x)$ will be Hölder-continuous in the open interval $(-1,1)$, but may have logarithmic singularities at the end points $x_1 = -1$, $x_2 = 1$, unless $\log G(x_k) = 0$. In general,

$$\Gamma(x) = \sigma_k \log|x - x_k| + \Gamma_o(x) \qquad (k = 1,2) \quad , \tag{39a}$$

$$\sigma_k = \mu_k + i\nu_k = (-1)^k \frac{1}{2\pi i} \log G(x_k) \quad , \tag{39b}$$

where $\Gamma_o(x)$ remains bounded near and at x_k. Hence, by (38),

$$Z_{\pm}(x) = \omega_{\pm}(x)(1+x)^{n_1 \pm \sigma_1}(1-x)^{n_2 \pm \sigma_2} \quad , \tag{40}$$

where $\omega_{\pm}(x)$ are nonvanishing functions in $[-1,1]$.

Now the integers n_1, n_2 are selected to satisfy either of the conditions

$$-1 < n_k \pm \mu_k < 0 \quad , \tag{41a}$$

$$0 \leqslant n_k \pm \mu_k < 1 \qquad (k = 1,2) \quad , \tag{41b}$$

in which the upper (+) sign is for the case $b = b_o + (ac)^{\frac{1}{2}}$, and the lower (-) sign for $b = b_o - (ac)^{\frac{1}{2}}$. The values of n_1, n_2 so selected may be different for the two end points ($k = 1,2$). Condition (41a) is for an end point at which $Z_\pm(x)$ may admit a branch-point type (but integrable) singularity, whereas condition (41b) insures $Z_\pm(x_k) = 0$, as may be required on physical grounds.

The selected n_1 and n_2 determine the "end-point index"

$$\kappa = -(n_1 + n_2) \quad , \tag{42}$$

which dictates the degree m of the polynomial $P_m(x)$:

(i) For $\kappa \geqslant 0$, $P_m(x)$ can be taken an arbitrary polynomial of degree

$$m \leqslant \kappa - 1 \quad , \quad \text{if} \quad \kappa > 0 \quad ; \quad \text{and} \quad P_m(x) = 0 \quad , \quad \text{if} \quad \kappa = 0 \quad . \tag{43}$$

(ii) For $\kappa < 0$, $P_m(x) = 0$, and the solution is valid if and only if the following orthogonality conditions are satisfied by $\psi(x)$:

$$\int_{-1}^{1} t^{\ell} c^{\frac{1}{2}}(t)[\psi(t)/Z_\pm(t)]\,dt = 0 \qquad (\ell = 0, 1, \ldots\ldots -(\kappa + 1)) \quad . \tag{44}$$

With $\varphi_\pm(x)$ so determined, $u(x)$ can be solved in succession by substituting (1) in (36b), giving

$$a^{\frac{1}{2}}(x)\, u(x) \pm c^{\frac{1}{2}}(x)\, H_x[u(t)] = \varphi_\pm(x) \qquad (|x| < 1) \quad , \tag{45}$$

which is again a singular integral equation of the Carleman type. The general solution of (45) is

$$u(x) = \frac{a^{\frac{1}{2}}\varphi_{\pm}(x)}{a+c} \mp \frac{c^{\frac{1}{2}}Z_{\mp}(x)}{a+c}\left\{\frac{1}{\pi}\oint_{-1}^{1}\frac{\varphi_{\pm}(t)dt}{Z_{\mp}(t)(t-x)} + Q_m^{\pm}(x)\right\} \quad (|x| < 1) \qquad (46)$$

where $Q_m^{\pm}(x)$ are polynomials in x of degree m, $Z_{\pm}$ being the same as given by (38). In this solution, the integers n_1, n_2 in the expression for $Z_{\pm}$ and the degree m of Q_m are determined as before. Finally, substituting (37) in (46), and making use of the Poincaré-Bertrand formula (19), we obtain the solution

$$u(x) = \frac{\psi(x)}{a+c} \pm \frac{a^{\frac{1}{2}}Z_{\pm}}{(a+c)^2}\left\{H_x\left[\frac{c^{\frac{1}{2}}\psi}{Z_{\pm}}\right] + P_m^{\pm}(x)\right\} \mp \frac{c^{\frac{1}{2}}Z_{\mp}}{a+c}\left\{H_x\left[\frac{a^{\frac{1}{2}}\psi}{(a+c)Z_{\mp}}\right] + Q_m^{\pm}\right\}$$
$$- \frac{c^{\frac{1}{2}}Z_{\mp}}{a+c}\left\{\frac{1}{\pi^2}\int_{-1}^{1}\frac{c^{\frac{1}{2}}(t)\psi(t)dt}{Z_{\pm}(t)(t-x)}\int_{-1}^{1}\frac{Z_{\pm}(s)ds}{Z_{\mp}(s)(a+c)}\left(\frac{1}{s-x} - \frac{1}{s-t}\right) + H_x\left[\frac{Z_{\pm}P_m^{\pm}}{Z_{\mp}(a+c)}\right]\right\}, \qquad (47)$$

in which the upper sign is for $b = b_o + (ac)^{\frac{1}{2}}$, and the lower for $b = b_o - (ac)^{\frac{1}{2}}$. The corresponding $v(x)$ is determined from (1) upon substitution of $u(x)$. Note that this solution remains valid even when $a(x)$ and $c(x)$ become zero or negative in $[-1, 1]$ as long as $a + c > 0$ over the entire interval.

The final, and perhaps, most crucial step is to examine the behavior of u and v near the end points $x = \pm 1$, and to ascertain if certain physically required end conditions can be satisfied by the analytical solution. This task is greatly facilitated by the fact that the solution is expressed in an explicit, closed form, as given by (47), in this case. In fact, taking the principal branch of $\log G(x)$, we see that $-\pi < \arg G(x) < \pi$ for $a(x) + c(x) > 0$ in $|x| < 1$. Hence, by (39), we find the bounds $-\frac{1}{2} \leqslant \mu_1 < 0$, $0 \leqslant \mu_2 < \frac{1}{2}$, and by (40),

$$|Z_{\pm}(x)| = |\omega_{\pm}(x)|(1+x)^{n_1 \pm \mu_1}(1-x)^{n_2 \pm \mu_2} \quad . \qquad (48)$$

According to rules (41a, b), any one of the following three cases for the solutions φ and u are possible:

(i) $n_1 = 0$, $n_2 = 0$ ($\kappa = -(n_1 + n_2) = 0$). Then $P_m^{\pm} = 0$, $Q_m^{\pm} = 0$, and $Z_+(x)$ is singular at $x = -1$, $Z_-(x)$ singular at $x = 1$;

(ii) $n_1 = 0$, $n_2 = -1$ for Z_+, and $n_1 = -1$, $n_2 = 0$ for Z_-, both corresponding to $\kappa = 1$, thus permitting $P_m^{\pm}$ and $Q_m^{\pm}$ to be nonvanishing constants, with the resulting $\varphi_{\pm}$ and u both singular at the two ends $x = \pm 1$;

(iii) $n_1 = 1$, $n_2 = 0$ for Z_+, and $n_1 = 0$, $n = 1$ for Z_-, both selections corresponding to $\kappa = -1$, so that $P_m^{\pm 2} = Q_m^{\pm} = 0$; a solution which is regular at both $x = \pm 1$ is possible if and only if

$$\int_{-1}^{1} c^{\frac{1}{2}}(x)\psi(x)/Z_{\pm}(x)dx = 0 \quad , \qquad \text{and} \qquad \int_{-1}^{1} \varphi_{\pm}(x)/Z_{\pm}(x)dx = 0 \quad . \tag{49}$$

The last condition can, of course, be released if $c(\pm 1) = 0$. If, in addition to (49),

$$\psi(+1) = \psi(-1) = 0 \quad , \tag{50}$$

then by (37) and (46), $\varphi_{\pm}(\pm 1) = 0$ and $u(\pm 1) = 0$. The corresponding solution of $v(x)$ will then be bounded at $x = \pm 1$.

Therefore, existence of solutions of type (iii), with both $u(x)$, $v(x)$ Hölder-continuous in $(-1, 1)$ and bounded at $x = \pm 1$, depends on the satisfaction of conditions (49) and (50) on a, c, p and q.

Case II

$$a(x) > 0 \quad , \qquad b = \text{const.} \quad , \qquad c \equiv 0 \quad . \tag{51}$$

This is a special limit of Case I; the solution is easily deduced from (47) to be

$$u(x) = \psi(x)/a(x) \qquad (|x| < 1) \quad . \tag{52}$$

This result is also obvious from the original equations (29) and (1). Boundedness of the solutions for u and v now depends on condition (50) only.

Case III

$$a(x) \equiv 0 \quad , \qquad b = \text{const.} \quad , \qquad c(x) > 0 \quad . \tag{53}$$

This is another special limit of Case I. In this limit, $\log G(x) = i\pi$; hence, by (38), $\exp\Gamma = (1-x)^{\frac{1}{2}}(1+x)^{\frac{1}{2}}$. The corresponding solution for u is

$$u(x) = \frac{\psi(x)}{c(x)} - X(x)\left\{\frac{1}{\pi^2}\int_{-1}^{1}\frac{\psi(t)dt}{X(t)(t-x)}\int_{-1}^{1}\left(\frac{1}{s-x} - \frac{1}{s-t}\right)\frac{ds}{c(s)} + H_x\left[\frac{P_m}{c}\right] - Q_m\right\}, \tag{54a}$$

where

$$X(x) = c^{-\frac{1}{2}}Z = (1+x)^{n_1+\frac{1}{2}}(1-x)^{n_2-\frac{1}{2}} \quad . \tag{54b}$$

This result can be deduced from (47), or it can be obtained directly from (1) and (29).

Case IV

$$a, b, c = \text{constant} \quad , \qquad a + c > 0 \quad . \tag{55}$$

This also belong to Case I since it is always possible to find a constant b_o, such that $b = b_o + (ac)^{\frac{1}{2}}$ when $a, b,$ and c are constants. Since G, as defined by (38b), is now a constant, we have in this case

$$Z_{\pm}(x) = (a+c)^{\frac{1}{2}}(1+x)^{n_1 \mp \sigma}(1-x)^{n_2 \pm \sigma} \tag{56a}$$

where

$$\sigma = \mu + i\nu = \frac{1}{2\pi i}\log[(a^{\frac{1}{2}}+ic^{\frac{1}{2}})/(a^{\frac{1}{2}}-ic^{\frac{1}{2}})] \quad . \tag{56b}$$

As σ is also a constant, further simplifications of the expression for the solution (46) and (47), are immediate.

6. The Rayleigh-Ritz Method

In some physical problems, u and v are required to be Hölder-continuous on the closed interval $[-1, 1]$. This means, in particular, that condition (5), $u(\pm 1) = 0$, must be satisfied. When the analytical solution can be successfully obtained, e.g., as in Section 5, the end conditions (5) can generally be examined only at the final stage. It is quite possible that, on occasion, condition (5) simply cannot be satisfied, as will be illustrated later by examples. It might be possible to remedy

this situation by enlarging the class of acceptable functions and by modifying the isoperimetric constraints so that a solution of some physical significance is reached. Such tasks may indeed constitute the major difficulties in the actual solution.

In case both u and v are required to be Hölder continuous on the closed interval $[-1,1]$, we have seen that condition (5), $u(\pm 1) = 0$, must be imposed. An approximating procedure for this case can be developed by employing the Rayleigh-Ritz method (or the closely related Galerkin method), which has been used with great success in other variational problems, especially for numerical solutions. This method is applicable to those variational problems which satisfy the sufficient condition (24) or the more restrictive condition (25). The central idea is the construction of a sequence of comparison functions that forms a minimizing sequence. A sequence $\bar{u}_1, \bar{u}_2, \ldots, \bar{u}_n, \ldots$ of admissible functions is called a minimizing sequence for the functional $I[u]$ if $I[\bar{u}_n]$ converges to the minimum value $I[\bar{u}]$, where $\bar{u} = \lim \bar{u}_n$ as $n \to \infty$, with

$$I[\bar{u}_1] \geqslant I[\bar{u}_2] \geqslant \ldots \geqslant I[\bar{u}_n] \geqslant \ldots \geqslant I[\bar{u}] \quad . \tag{57}$$

whether $I[\bar{u}]$ is a minimum which is actually attained for a function $\bar{u} = u$ remains an open question, the answer to which depends, in particular, on whether the end conditions $u(\pm 1) = 0$ can eventually be satisfied.

To construct a minimizing sequence, we start with a complete system of fixed "coordinate" functions $\varphi_1(x), \varphi_2(x), \ldots,$ which are Hölder continuous on $[-1,1]$ and $\varphi_n(\pm 1) = 0$ $(n = 1, 2, \ldots)$, so that all linear combinations

$$u_n(x) = \gamma_1\varphi_1 + \gamma_2\varphi_2 + \ldots + \gamma_n\varphi_n \quad , \tag{58}$$

where $\gamma_1, \ldots, \gamma_n$ are n constant coefficients, are admissible comparison functions for the problem. The requirement that $I[u_n] = I_n$ be a minimum presents an ordinary minimum problem for $I[u_n]$ as a function of the n parameters $\gamma_1, \gamma_2, \ldots, \gamma_n$, which are determined by the simultaneous algebraic equations $\partial I[u_n]/\partial\gamma_k = 0$ $(k = 1, 2, \ldots, n)$, or more explicitly, when expressed in terms of (8),

$$\int_{-1}^{1} \{f_u - H_x[f_v]\}_{u=u_n} \varphi_k(x)dx = 0 \qquad (k = 1, 2, \ldots, n) \quad . \tag{59}$$

Note that the expression within the curly bracket, if set equal to zero on $[-1,1]$, yields just the Euler equation (18). This system of equations for γ_k's can always be fulfilled, at least in principle according to Weierstrass's theorem, provided $I[u_n]$ is a continuously differentiable function of γ_k's (we have assumed that this is the case). However, when f_u and f_v are nonlinear or transcendental in u and v, determination of the γ_k's from (59), by numerical methods or otherwise, can be extremely difficult, particularly when n is not small. Let $\bar{\gamma}_1, \bar{\gamma}_2, \ldots, \bar{\gamma}_n$ be the solution of (59), and set

$$\bar{u}_n = \sum_{k=1}^{n} \bar{\gamma}_k \varphi_k(x) \quad , \qquad \bar{v}_n = \sum_{k=1}^{n} \bar{\gamma}_k H_x[\varphi_k] \quad . \tag{60}$$

When the fundamental function f satisfies the sufficient condition (25), it is obvious that $I[\bar{u}_n] \leqslant I[u_n]$. From this it follows, by setting $u_n = \bar{u}_{n-1}$, which is always possible, that $I[\bar{u}_n] \leqslant I[\bar{u}_{n-1}]$, and hence (57) is satisfied. Therefore, the sequence $\bar{u}_1, \bar{u}_2, \ldots$ given by (60) is indeed a minimizing sequence.

The complete set of coordinate functions can be chosen in various ways. Particularly suitable for the present class of problems is the trigonometric functions $\varphi_n(x) = \sin n\theta$ ($x = \cos\theta$, $n = 1, 2, \ldots$), since both u_n and v_n then become simply finite Fourier series:

$$u_n = \sum_{k=1}^{n} \gamma_k \sin k\theta \quad , \qquad v_n = -\sum_{k=1}^{n} \gamma_k \cos k\theta \qquad (0 \leqslant \theta = \cos^{-1} x \leqslant \pi) \quad . \tag{61}$$

This is equivalent to expanding u_n and v_n in series of Tchebichef polynomials,

$$u_n(x) = (1-x^2)^{\frac{1}{2}} \sum_{k=1}^{n} \gamma_k U_{k-1}(x) \quad , \quad v_n(x) = -\sum_{k=1}^{n} \gamma_k T_k(x) \quad (|x| \leqslant 1) \quad , \tag{62a}$$

where

$$U_{n-1}(\cos\theta) = \sin n\theta/\sin\theta \quad , \quad T_n(\cos\theta) = \cos n\theta \qquad (n=1,2, \ . \ . \ .) \quad . \tag{62b}$$

Tricomi (19[illegible]) also employed expansions in series of a Jacobi polynomial $P_n^{(\alpha,\beta)}(x)$ multiplied by its weighting function $(1-x)^\alpha(1+x)^\beta$. Another complete set of functions vanishing at $x = \pm 1$ is the polynomials $\varphi_n = (1-x^2)x^{n-1}$ $(n = 1,2, \ . \ . \ .)$; the corresponding expression for v_n, however, is more lengthy.

For quadratic functionals, the problem of determining the γ_k's reduces simply to a linear algebra. In fact, substitution of (27) and (58) in (59) yields

$$\sum_{k=1}^{n} K_{jk}\bar{\gamma}_k = L_j \qquad (j = 1,2, \ . \ . \ . \ ,n) \quad , \tag{63a}$$

where, with suitable rearrangement of terms by interchanging the orders of integration,

$$K_{jk} = \int_{-1}^{1} \{a\varphi_j\varphi_k + b(\varphi_j H_x[\varphi_k] + \varphi_k H_x[\varphi_j]) + cH_x[\varphi_j]H_x[\varphi_k]\}dx \quad , \tag{63b}$$

$$L_j = -\int_{-1}^{1} \{p\varphi_j + qH_x[\varphi_j]\} \quad . \tag{63c}$$

Clearly, $K_{jk} = K_{kj}$. In particular, when $\varphi_k(\cos\theta) = \sin k\theta$, we have

$$K_{jk} = \int_0^{\pi} \{a \sin k\theta \sin j\theta - b \sin(k+j)\theta + c \cos k\theta \cos j\theta\} \sin\theta \ d\theta \quad , \tag{64a}$$

$$L_j = \int_0^{\pi} \{q \cos j\theta - p \sin j\theta\} \sin\theta \ d\theta \quad . \tag{64b}$$

The solution $\bar{\gamma}_k$'s of (63) contains M multipliers $(\lambda_1, \ . \ . \ . \ . \ , \lambda_M)$, which can be determined, in principle when $n > M$, in terms of

$C_1, \ldots, C_M$, by the M constraints (3).

Success of this method in any particular case will depend on the proper choice of coordinate functions φ_k and on the convergence of $\bar{u}_n \to \bar{u}$ as $n \to \infty$. Whether the minimizing sequence itself converges to the solution u (i.e. $\bar{u} = u$) is a difficult theoretical question. In many cases this method may still prove useful for numerical calculations even though its convergence to the exact solution is unproved. The method will be illustrated by examples and compared with known analytical solutions in the next section.

7. Examples

The following examples are selected to exhibit the main features of the optimum solution. Several other problems of physical significance will be considered more fully elsewhere.

Example 1. The functional

$$J[u] = \int_{-1}^{1} [u^2(x) - 2\pi x^3 u(x) v(x)]\, dx \quad . \tag{65}$$

with u and v related by (1), is to be minimized subject to the constraint

$$J_1[u] = \int_{-1}^{1} u(x)dx = 1 \quad . \tag{66}$$

Here we have by comparison with (27), (28),

$$a = 1 \quad , \quad b(x) = -\pi x^3 \quad , \quad c = 0 \quad , \quad p = -\frac{1}{2}\lambda \quad , \quad q = 0 \quad . \tag{67}$$

This set of coefficients does not coincide with any of the special cases discussed in Section 5. In this case, however, it is still possible to obtain a solution in closed form since the associated Fredholm integral equation (32) is particularly simple,

$$u(x) + \int_{-1}^{1} K(t,x)u(t)dt = \frac{1}{2}\lambda \qquad (|x| < 1) \quad , \tag{68a}$$

where

$$K(t,x) = (t^3 - x^3)/(t-x) = t^2 + tx + x^2 \quad , \tag{68b}$$

which is a Pincherle-Goursat kernel. Hence $u - \frac{1}{2}\lambda$ must necessarily be a quadratic function of x. In fact, we find

$$u(x) = \frac{15}{89}\lambda\left(\frac{5}{2} - 3x^2\right) \quad , \quad \lambda = 89/45 \quad , \tag{69}$$

this value of λ being given by condition (66). The corresponding v is

$$v(x) = H_x[u] = \frac{1}{3\pi}\left\{\left(\frac{5}{2} - 3x^2\right)\log\left(\frac{1-x}{1+x}\right) - 6x\right\} \quad . \tag{70}$$

Finally, upon substituting the solution (69), (70) in (65), the minimum value of J is

$$J_o = J[u] = 89/90 = 0.9888 \ . \ . \ . \ . \tag{71}$$

In this specific example it is noteworthy that the logarithmic singularities of v at the end points $x = \pm 1$ arise from the fact that $u(\pm 1) \neq 0$. We further note that the values of $u(\pm 1)$ depend on the coefficients listed in (67), whereas condition (66) affects merely the uniform scale of $u(x)$.

Although the exact solution shows that $v(x)$ is logarithmically singular at $x = \pm 1$, it is nonetheless significant to investigate how accurately the minimum value J_o can be predicted by approximate solutions of u and v that are Holder continuous on $[-1,1]$. Since $u(x)$ must be even in x, we choose the n-terms approximate solution as

$$u_n(\cos\theta) = \sum_{k=1}^{n} \gamma_k \sin(2k-1)\theta \quad , \quad v_n(\cos\theta) = -\sum_{k=1}^{n} \gamma_k \cos(2k-1)\theta \quad . \tag{72}$$

Condition (66) requires that $\overline{\gamma}_1 = 2/\pi$ for all n. Let J_n be the minimum value of $J[u_n]$ found by minimizing the quadratic functional $J[u_n]$ with respect to $\gamma_2, \gamma_3, \ . \ . \ . \gamma_n$. We obtain the following numerical results shown in Table 1. The γ_k's in the last row of Table 1 are the Fourier components of the exact solution

TABLE 1

n	J_n	$-\bar{\gamma}_2$	$-\bar{\gamma}_3$	$-\bar{\gamma}_4$	$-\bar{\gamma}_5$	$-\bar{\gamma}_6$	$-\bar{\gamma}_7$	$-\bar{\gamma}_8$	$-\bar{\gamma}_9$	$-\bar{\gamma}_{10}$
1	1.040376									
2	0.992059	.216741								
3	0.989882	.231817	.048847							
4	0.989378	.235935	.057907	.024036						
5	0.989181	.237661	.061369	.030218	.015138					
6	0.989083	.238555	.063093	.033010	.019722	.01074				
7	0.989026	.239081	.064086	.034550	.022009	.014327	.008170			
8	0.988993	.239417	.064714	.035501	.023359	.016238	.011081	.006504		
9	0.988968	.239646	.065137	.036133	.024234	.017422	.012708	.008932	.005347	
10	0.988951	.239809	.065436	.036576	.024838	.018218	.013752	.010338	.007414	.004502
Exact	0.9888..	.240501	.066693	.038399	.027253	.021270	.017511	.014915	.013008	.011544

$$\gamma_k = \frac{2}{\pi}\int_0^{\pi} u(\cos\theta)\sin(2k-1)\theta\, d\theta \quad ,$$

where u is given by (69). These numerical results exhibit the increasing accuracy of J_n predicted by the Hölder continuous solutions $\bar{u}_n$ and $\bar{v}_n$, as n increases. In fact, the error of $J_n = J[\bar{u}_n]$, by comparison with the exact solution of J_o of (71), is already as small as 0.1% for $n = 3$. Although the convergence of the coefficients $\bar{\gamma}_k$ to the Fourier components of the exact solution is less obvious, particularly for k large, plots of $u(\cos\theta)$ and $u_{10}(\cos\theta)$, for example, show very little difference except near the endpoints $\theta = 0, \pi (x = \pm 1)$. The same holds true for $v(\cos\theta)$ and $v_{10}(\cos\theta)$, although now the discrepency at the endpoints is more pronounced since v in (70) is logarithmically singular as $x \to \pm 1$.

Example 2

The second example is to minimize

$$J[u] = \int_{-1}^{1} \{u^2(x) + kv^2(x)\}dx \tag{73}$$

subject to

$$J_1[u] = \int_{-1}^{1} u(x)dx = 1 \quad , \tag{74}$$

where k is a real constant, $k > -1$, in order that the necessary condition (30) is satisfied.

In this case, we have, by comparison with (27), (28), and (36b)

$$a = 1 \quad , \quad b = 0 \quad , \quad c = k \quad , \quad p = -\frac{1}{2}\lambda \quad , \quad q = 0 \quad , \quad \psi = \frac{1}{2}\lambda \quad . \tag{75}$$

This belongs to case IV treated in Section 5. Thus, by (56),

$$Z_{\pm}(x) = (1+k)^{\frac{1}{2}}(1+x)^{n_1 \mp \sigma}(1-x)^{n_2 \pm \sigma} \qquad (|x| < 1) \quad , \tag{76a}$$

where

$$\sigma = \mu = \frac{1}{\pi} \tan^{-1} k^{\frac{1}{2}} \qquad (k > 0) \qquad (76b)$$

$$= i\nu = \frac{i}{2\pi} \log\{[1+(-k)^{\frac{1}{2}}]/[1-(-k)^{\frac{1}{2}}]\} \qquad (-1 < k < 0) \quad . \qquad (76c)$$

A quick check with the end conditions for $k > 0$ shows that conditions (49), (50) cannot be satisfied, implying that the solution cannot be regular at both $x = \pm 1$. In fact, by direct calculation from (47), with $P_m = Q_m = 0$, the optimum solution is found as follows

<u>Case (i)</u> $\quad k > 0 \quad (\tan\mu\pi = k^{\frac{1}{2}} \quad , \quad 0 < \mu < \frac{1}{2})$

$$u(x) = \frac{\lambda}{4} \cos\mu\pi \left\{ \left(\frac{1-x}{1+x}\right)^{\mu} + \left(\frac{1+x}{1-x}\right)^{\mu} \right\} \quad , \qquad (77a)$$

$$v(x) = \frac{\lambda}{4} \frac{\cos^2\mu\pi}{\sin\mu\pi} \left\{ \left(\frac{1-x}{1+x}\right)^{\mu} - \left(\frac{1+x}{1-x}\right)^{\mu} \right\} \quad . \qquad (77b)$$

This solution is readily verified by taking note of the identity

$$H_x\left[\left(\frac{1-t}{1+t}\right)^{\pm\mu}\right] = \pm(\cot\mu\pi)\left(\frac{1-x}{1+x}\right)^{\pm\mu} \mp \csc\mu\pi \quad ,$$

which can be shown by a contour integration of $(t-1)^{\mu}(t+1)^{-\mu}(t-x)^{-1}$ encircling the real t-axis from $t = -1$ to 1 in the complex t-plane (or see Tricomi 1957, p. 181). The Lagrange multiplier λ is determined by the constraint condition (68) to give

$$\lambda = (\tan\mu\pi)/\mu\pi \quad , \qquad (78a)$$

and the corresponding minimum value of J is

$$J_o = \frac{1}{2}\lambda = (\tan\mu\pi)/(2\mu\pi) \qquad (0 < \mu < \frac{1}{2}) \quad . \qquad (78b)$$

<u>Case (ii)</u> $\quad -1 < k < 0 \quad (\tanh\nu\pi = (-k)^{\frac{1}{2}} \quad , \quad \nu > 0) \quad .$

$$u(x) = \frac{1}{2}\lambda \cosh\nu\pi \cos\left(\nu \log\frac{1-x}{1+x}\right) \quad , \qquad (79a)$$

$$v(x) = \frac{1}{2}\lambda \cosh\nu\pi \coth\nu\pi \sin\left(\nu \log\frac{1-x}{1+x}\right) \quad , \qquad (79b)$$

with

$$\lambda = (\tanh \nu\pi)/\nu\pi \quad , \tag{80a}$$

and

$$J_o = \frac{1}{2}\lambda = (\tanh \nu\pi)/(2\nu\pi) \quad . \tag{80b}$$

The above solution can be deduced from Case (i) by analytic continuation of the parameter $\mu = i\nu$, or it can be verified by making use of the conversion formulae

$$H_x\left[\sin\left(\nu \log \frac{1-t}{1+t}\right)\right] = -\coth \nu\pi \cos\left(\nu \log \frac{1-x}{1+x}\right) + \operatorname{csch} \nu\pi \quad ,$$

$$H_x\left[\cos\left(\nu \log \frac{1-t}{1+t}\right)\right] = \coth \nu\pi \sin\left(\nu \log \frac{1-x}{1+x}\right) \quad ,$$

which can be shown by a contour integration of $(t-1)^{i\nu}(t+1)^{-i\nu}(t-x)^{-1}$ circumventing the real axis from $t = -1$ to 1 in the complex t-plane.

A third limiting case is $k = 0$, or $c = 0$, in which case it follows from (52) that $u(x) = \frac{1}{2}$, $\lambda = 1$ and $J_o = \frac{1}{2}$. This result agrees with Cases (i) and (ii) in the limit as $k \to \pm 0$.

To compare this solution with the Rayleigh-Ritz method, we choose $k = -1/4$, in which case

$$J_o = 1/(2 \log 3) \sim 0.455119 \quad .$$

The discretized Fourier method, again using the expression (72), gives the results shown in Table 2. The apparent convergence of the Fourier series method to the exact solution is again exhibited.

Acknowledgment

We are deeply indebted to Professors C. R. DePrima and Duen-pao Wang for stimulating discussions in the early stage of this study. This work was sponsored by the Naval Ship System Command General Hydrodynamics Research Program, administered by the Naval Ship Research and Development Center and the Office of Naval Research, under Contract Nonr-220(51). A. K. Whitney also wishes to thank the National Science Foundation for its support of his four years of graduate study, during which time some of the present work was completed.

TABLE 2

n	J_n	$\bar{\gamma}_2$	$\bar{\gamma}_3$	$\bar{\gamma}_4$	$\bar{\gamma}_5$	$\bar{\gamma}_6$	$\bar{\gamma}_7$	$\bar{\gamma}_8$	$\bar{\gamma}_9$	$\bar{\gamma}_{10}$
1	0.472832									
2	0.458504	.135041								
3	0.456182	.151969	.057789							
4	0.455540	.156755	.069076	.031113						
5	0.455310	.158582	.073065	.038576	.018826					
6	0.455215	.159405	.074815	.041568	.023913	.012213				
7	0.455172	.159816	.075682	.042998	.026123	.015775	.008284			
8	0.455151	.160036	.076147	.043752	.027241	.017407	.010827	.005784		
9	0.455140	.160159	.076409	.044174	.027853	.018265	.012035	.007622	.004111	
10	0.455134	.160231	.076562	.044419	.028206	.018747	.012685	.008515	.005447	.002949
Exact	0.455119	.160307	.076691	.044590	.028588	.019074	.016543	.031474	.116258	.377993

References

Courant, R. and Hilbert, D. 1953 Methods of Mathematical Physics. Vol. I. New York: Interscience Publishers.

Muskhelishvili, N.I. 1953 Singular Integral Equations. Groningen, Holland: Noordhoff.

Tricomi, F.G. 1951 On the finite Hilbert transformation. Quart. J. Math. (Oxford), 2, 199 - 211.

Tricomi, F.G. 1955 Sulle equazioni integrali del tipo di Carleman. Annali di Matem. 39, 229 - 244.

Tricomi, F.G. 1957 Integral Equation. New York: Interscience Publishers.

Whitney, A.K. 1969 Minimum drag profiles in infinite cavity flows. Ph.D. Thesis, California Institute of Technology, Pasadena, California.

THEORY OF OPTIMUM SHAPES IN FREE-SURFACE FLOWS

PART II.

Optimum Profile of Sprayless Planing Surface

by

T. Yao-tsu Wu, Arthur K. Whitney
California Institute of Technology
Pasadena, California

The purpose of this work is to evaluate the optimum profile of a two-dimensional plate producing the maximum hydrodynamic lift while planing on a water surface, under the condition of no spray formation and no gravitational effect, the latter assumption serving as a good approximation for operations at large Froude numbers. By employing a recently developed theory of variational calculus involving singular integral equations, the lift of the sprayless planing surface is maximized under the isoperimetric constraints of fixed chord length and fixed wetted arc-length of the plate. Consideration of the extremization yields, as the Euler equation, a pair of coupled nonlinear singular integral equations of the Cauchy type, which are subsequently linearized to facilitate further analysis. The analytical solution of the linearized problem has a branch-type singularity, in both pressure and flow angle, at the two ends of plate. In a special limit, this singularity changes its type, emerging into a logarithmic one, which is the weakest type possible. Guided by this analytic solution of the linearized theory, approximate solutions have been calculated for the nonlinear problem using the method of discretized Fourier expansions, and the numerical results compared with the linearized theory.

PART II

Optimum Profile of Sprayless Planing Surface

1. Introduction

The problem of planing surface has received much interest in the past as a device for producing hydrodynamic lift, while moving forward on a water surface. Most of the early theoretical studies were based on the linearized theory, taking into account the effect of gravity for the range of moderate to large Froude numbers, and assuming that the spray sheet at the leading edge of the plate is thrown backward in the upstream direction. The hydrodynamic drag on the planing surface therefore consists essentially of two components, one due to spray formation and the other due to wave-making, aside from the viscous skin-frictional drag, which is generally small. An exhaustive survey of the literature on the linear theory of planing surfaces has been given by Wehausen and Laitone (1960). A crucial limitation of the linear theory, which seems to have escaped proper recognition, is that the plate draft (or the height of the plate above, or below, the undisturbed water surface) cannot be arbitrarily prescribed. Loss of this degree of freedom may be attributed to the preassigned direction of the spray sheet. This limitation was removed by Rispin (1967) and Wu (1967), who developed a nonlinear theory based on the singular perturbation method.

Of all the previous investigations, an important contribution by Cumberbatch (1958) may be singled out as the only case in which the possibility was explored for a planing surface to operate, at a given Froude number, without spray formation - - the so-called "smooth entry" condition. This state of operation immediately opens up the possibility of further drag reduction by eliminating the spray, thereby improving the hydromechanical efficiency of planing surface.

This paper seeks to determine the optimum profile of a two-dimensional plate, moving along the free surface of an otherwise undisturbed water, without forming a spray sheet at the leading edge, such that for given chord length and wetted arc-length of the plate, this profile will maximize the lift. For simplicity, the Froude number is assumed to be so large that the gravity effect may be neglected as the first approximation, or can be evaluated separately in a higher order theory. The flow is further assumed

to be inviscid and irrotational. Consequently, in the absence of the gravitational and viscous effects as well as spray formation, the planing surface will encounter no drag, leaving the lift as the only component of the hydrodynamic force.

Aside for its practical value in engineering applications, this problem was selected originally as one of the simplest in the general theory of optimum shapes involving free surface flows, a theory which may have a far-reaching significance in its mathematical context. Generally speaking, in this class of variational problems, the functional subject to extremization contains unknown argument functions which are related to each other by integral equations - - a consequence of the very nature of the mixed-type boundary problems. In particular, for two-dimensional potential flows, the integral equation is singular, of the Cauchy type. Thus, this situation is in sharp contrast to classical variational calculus, in which the unknown argument functions are related by differential equations. Consequently, the Euler equation which results from the consideration of extremization turns out to be, in general, a nonlinear, singular integral equation. Since the methods of solution of this equation are very limited, more powerful methods are very much desired. A preliminary mathematical study of this new class of variational problems has been carried out by the authors (see Part I). Following the same approach, the present problem will be investigated to provide useful solution of hydromechanical interest. It is hoped that this study will stimulate further interest in the development of the general theory, and, in turn, aid the resolution of numerous fluid mechanical problems of potential usefulness.

2. The Problem of Sprayless Planing Surface

In order to prepare for the formulation of the optimum shape problem, we begin with a consideration of the entire class of two-dimensional plates, planing on a water surface, which is otherwise undisturbed, with the plate profiles so adjusted that the entry of water at the leading edge of plate is "smooth," i.e., without forming a spray sheet, as shown in Fig. 1. It is convenient to choose the body frame of reference so that the free stream velocity is U, in the positive x-direction. The resulting

flow is assumed to be incompressible and irrotational. The Froude number, $Fr = U/(g\ell)^{\frac{1}{2}}$, based on the chord length ℓ and the gravitational constant g, is taken to be sufficiently large so that the effect of gravity may be neglected. This class of flows is thus characterized by having no spray sheet and no stagnation point inside and on the flow boundary, provided the plate has a continuous slope.

By a suitable choice of the origin and magnification, the complex potential $f = \varphi + i\psi$, φ being the velocity potential and ψ the stream function, is mapped onto the lower half of a parametric $\zeta = \xi + i\eta$ plane by

$$f = AU\zeta \quad , \tag{1}$$

where A, a real positive constant, is chosen so that the plate is mapped onto $\eta = 0$, $-1 < \xi < 1$, and the free surface onto $\eta = 0$, $|\xi| > 1$. The physical plane will be denoted by $z = x + iy$, in which the x and y components of the flow velocity are u and v, respectively. In terms of the complex velocity

$$w = df/dz = u - iv = qe^{-i\theta} \quad , \quad q = (u^2 + v^2)^{\frac{1}{2}} \quad , \quad \theta = \tan^{-1}(v/u) \quad , \tag{2}$$

or in terms of the logarithmic hodograph variable

$$\omega = \log(U/w) = \tau + i\theta \quad , \quad \tau = \log(U/q) \quad , \tag{3}$$

the Bernoulli equation reads

$$p - p_o = \frac{1}{2}\rho(U^2 - q^2) = \frac{1}{2}\rho U^2(1 - e^{-2\tau}) \quad , \tag{4}$$

p being the pressure, p_o its free stream value, and ρ the fluid density.

On the free surface $(\psi = 0)$, $p = p_o$, hence

$$\tau^-(\xi) = \tau(\xi, 0^-) = 0 \qquad (|\xi| > 1) \quad . \tag{5}$$

On the plate, we denote the boundary value of $\omega(\zeta)$ by

$$\omega^-(\xi - i0) = \tau^-(\xi) + i\theta^-(\xi) = \Gamma(\xi) + i\beta(\xi) \qquad (|\xi| < 1) \quad . \tag{6}$$

As for the boundary condition on the plate, the simplest approach is to consider the "inverse problem" by prescribing either $\Gamma(\xi)$, or $\beta(\xi)$, as a known function of ξ, together with certain conditions to be specified below. When $\Gamma(\xi)$ is prescribed, it is required to be Hölder-continous*, non-negative (to insure that the pressure on the plate is nowhere less than p_o), and $\tau^-(\xi)$ is required to be continuous across the two ends of the plate at $\xi = \pm 1$, that is

$$\tau^-(\xi) = \Gamma(\xi) \geqslant 0 \qquad (|\xi| \leqslant 1) \quad , \tag{7}$$

$$\Gamma(1) = \Gamma(-1) = 0 \quad . \tag{8}$$

Under the present assumptions, the free stream condition is simply

$$\omega \to 0 \qquad \text{as} \qquad |\zeta| \to \infty \quad , \quad \eta \leqslant 0 \quad . \tag{9}$$

The solution of the Dirichlet problem prescribed by (5), (7) and (9) is

$$\omega(\zeta) = \frac{i}{\pi} \int_{-1}^{1} \frac{\Gamma(t)dt}{t - \zeta} \qquad (\eta = \operatorname{Im}\zeta \leqslant 0) \quad . \tag{10}$$

As ζ approaches an arbitrary point $\zeta = \xi - i0$ on the plate, use of the Plemelj formula (cf. e.g. Muskhelishvili (1953)) shows that the real part of (10) reduces to an identity, and its imaginary part gives

$$\beta(\xi) = \frac{1}{\pi} \mathcal{C} \int_{-1}^{1} \frac{\Gamma(t)dt}{t-\xi} \equiv H_\xi[\Gamma(t)] \qquad (|\xi| < 1) \quad , \tag{11}$$

in which the symbol C over the integral signifies the Cauchy principal part of the integral, and the symbol $H_\xi[\Gamma]$ denotes the finite Hilbert transform of Γ on $[-1,1]$. It is noted that if $\Gamma(\xi)$ is Hölder-continuous on $[-1,1]$ and if the end conditions (8) are satisfied, then $\beta(\xi)$, given by (11), is also Hölder-continuous on $[-1,1]$ (see Muskhelishvili (1953) §19, 29).

If, on the other hand, $\theta^-(\xi) = \beta(\xi)$, instead of $\tau^-(\xi)$, is prescribed

---

* $\Gamma(\xi)$ is said to be Hölder-continuous on $[-1,1]$ if for any two points ξ_1, ξ_2 on $[-1,1]$, $|\Gamma(\xi_1)-\Gamma(\xi_2)| < B|\xi_1-\xi_2|^\mu$, with the Hölder constant $B > 0$, and the Hölder index μ satisfying $0 < \mu \leqslant 1$.

for $|\xi| < 1$, one may either solve this Riemann-Hilbert problem directly, or regard (11) as an integral equation for $\Gamma(\xi)$. The solution for $\Gamma(\xi)$ satisfying conditions (8) and (9) is found to be

$$\Gamma(\xi) = -\frac{1}{\pi}(1-\xi^2)^{\frac{1}{2}} \oint_{-1}^{1} \frac{\beta(t)dt}{(1-t^2)^{\frac{1}{2}}(t-\xi)} \qquad (|\xi| < 1) \quad , \tag{12}$$

provided $\beta(\xi)$ further satisfies the orthogonality condition

$$\int_{-1}^{1} \beta(\xi)(1-\xi^2)^{-\frac{1}{2}} d\xi = 0 \quad . \tag{13}$$

In the above and henceforth, the function $(\zeta^2-1)^{\frac{1}{2}}$ is defined to be one-valued in the entire complex ζ-plane, cut from $\zeta = -1$ to 1 along the real ζ-axis, so that $(\zeta^2-1)^{\frac{1}{2}} \to \zeta$ as $|\zeta| \to \infty$ for all $\arg\zeta$. Thus, $(\zeta^2-1)^{\frac{1}{2}} \to \pm\, i(1-\xi^2)^{\frac{1}{2}}$ as $\zeta \to \xi \pm i0$, $|\xi| < 1$. It may be remarked here that the system (8) and (11) is equivalent to the system (12) and (13), since $\beta(\xi)$ given by (11) with $\Gamma(\xi)$ subject to condition (8) satisfies (12) and (13), and conversely, $\Gamma(\xi)$ given by (12) with $\beta(\xi)$ subject to (13) satisfies (11) and (8). Furthermore, by virtue of condition (5), $\omega(\zeta)$ can be continued analytically into the upper half ζ-plane by

$$\omega(\bar{\zeta}) = -\overline{\omega(\zeta)} \quad . \tag{14}$$

The physical plane is obtained by integration of $w = df/dz$,

$$z(\zeta) = AU \int_{-1}^{\zeta} d\zeta/w(\zeta) = A \int_{-1}^{\zeta} e^{\omega(\zeta)} d\zeta \quad , \tag{15}$$

$z(-1)$ being chosen to be the origin. The chord of the plate, ℓ, and its angle of incidence to the free stream α (positive in the clockwise sense) are given by

$$\ell = A \int_{-1}^{1} e^{\Gamma(\xi)} \cos[\beta(\xi)+\alpha] d\xi \quad , \tag{16}$$

$$\int_{-1}^{1} e^{\Gamma(\xi)} \sin[\beta(\xi)+\alpha] d\xi = 0 \quad . \tag{17}$$

Equation (16) determines the factor A in the transformation (1), and (17) states that the angle of attack α is referred to the chord of the plate. Finally, the total arc-length S of the plate is

$$S = A \int_{-1}^{1} e^{\Gamma(\xi)} d\xi \quad . \tag{18}$$

The total force $F = D + iL$, D being the drag and L the lift acting on the plate, can be determined from

$$F = i \int_{A}^{B} (p-p_o) dz = \frac{1}{2} i\rho \int_{-1}^{1} (U^2 - w\bar{w}) \frac{1}{w} \frac{df}{d\zeta} d\zeta$$

$$= \frac{1}{2} i\rho U^2 A \int_{-1}^{1} \left[e^{\omega(\zeta)} - e^{-\overline{\omega(\zeta)}} \right] d\zeta = \frac{1}{2} i\rho U^2 A \oint e^{\omega(\zeta)} d\zeta , \tag{19}$$

where the contour of the last integral encircles the plate counter-clockwise in the ζ-plane upon using the analytic continuation (14). By expanding $\omega(\zeta)$, given by (10), for large $|\zeta|$, we obtain, by the theorem of residues,

$$L = \rho U^2 A \int_{-1}^{1} \Gamma(\xi) d\xi \quad , \qquad D = 0 \quad . \tag{20}$$

Thus, the drag $D = 0$, as should be expected since there is no mechanism for producing drag, wavemaking or otherwise, in this idealized case.

3. The Optimum Shape Problem

We now consider the optimum shape problem: In the class of functions $\Gamma(\xi)$ which are Hölder-continuous on $[-1, 1]$, satisfy the inequality condition (7), and the homogeneous end conditions (8), find the extremal arcs $\Gamma_o(\xi)$ and its conjugate $\beta_o(\xi)$, mutually related by (11), which maximize the lift L under the isoperimetric constraints of fixed chord ℓ and total arc-length S.

In what follows we shall assume that the extremal arc has the property $\alpha = 0$ (zero incidence of the chord) and the symmetry

$$\Gamma(-\xi) = \Gamma(\xi) \quad , \qquad \beta(-\xi) = -\beta(\xi) \quad . \qquad (21)$$

The fact that the solution, if unique, must have this property may be seen by observing that the extremal arc will remain extremal when the flow direction is reversed. (This statement can actually be proved mathematically by using a reverse flow argument and requiring that both Γ and β be bounded at the two ends of the plate.) Under this condition, (17) is then automatically satisfied.

The problem of maximizing the lift $L = \rho U^2 L^*$ (see (20)) under the isoperimetric constraints of fixed chord ℓ (see (16), now with $\alpha = 0$) and given arc-length S (see (18)) is equivalent to that of finding the pair of extremal arcs $\Gamma(\xi)$, $\beta(\xi)$, which, while satisfying (7), (8) and (11), will also minimize the new functional

$$I[\Gamma,\beta;A] = \lambda_1 \ell + \lambda_2 S - L^* = A \int_{-1}^{1} f(\Gamma(\xi),\beta(\xi);\lambda_1,\lambda_2)d\xi \quad , \qquad (22a)$$

with the fundamental function given by

$$f(\Gamma,\beta;\lambda_1,\lambda_2) = \lambda_1 e^{\Gamma(\xi)}\cos\beta(\xi) + \lambda_2 e^{\Gamma(\xi)} - \Gamma(\xi) \qquad (|\xi| < 1) \quad . \qquad (22b)$$

Here, λ_1, λ_2 are undetermined multipliers, and we have assigned a negative sign to L^* so that minimization of $I[\Gamma,\beta;A]$ corresponds to maximization of L^*. It is necessary to include the coefficient A in the arguments of I, since for fixed ℓ and S, A is a functional of Γ and β.

The general variational problem of this kind has been discussed recently by the authors (see Part I). For the problem at hand, the method of solution will follow the same approach, though some modifications are required. Let the set $[\Gamma(\xi),\beta(\xi);A]$ denote the optimal solution and let $[\Gamma_1(\xi),\beta_1(\xi);A_1]$ be an arbitrary neighboring admissible set, which, by definition, satisfies (11), conditions (7) and (8), and the Hölder-continuity condition. The differences $\delta\Gamma = \Gamma_1(\xi) - \Gamma(\xi)$, $\delta\beta = \beta_1(\xi) - \beta(\xi)$, $\delta A = A_1 - A$ form a set of arbitrarily small variations. Suppose $\delta\Gamma(\xi)$ is taken to be a small, arbitrary function of ξ; then, since both $[\Gamma,\beta]$ and

$[\Gamma_1, \beta_1]$ satisfy (11), $\delta\beta(\xi)$ is given by the Hilbert transform of $\delta\Gamma$,

$$\delta\beta(\xi) = H_\xi[\delta\Gamma] \qquad (|\xi| < 1) \quad . \tag{23}$$

The variation δA, however, is arbitrary.

The variation of the functional I due to the variations $[\delta\Gamma, \delta\beta, \delta A]$ is

$$\Delta I = (A+\delta A)\int_{-1}^{1} f(\Gamma+\delta\Gamma, \beta+\delta\beta)d\xi - A\int_{-1}^{1} f(\Gamma, \beta)d\xi \quad .$$

Expansion of the above expression for sufficiently small $|\delta\Gamma|$, $|\delta\beta|$, $|\delta A|$ yields

$$\Delta I = \delta I + \frac{1}{2}\delta^2 I + \frac{1}{3!}\delta^3 I + \ldots \quad ,$$

where the first variation δI and the second variation $\delta^2 I$ are

$$\delta I = (\delta A)\int f(\Gamma,\beta)d\xi + A\int (f_\Gamma \delta\Gamma + f_\beta \delta\beta)d\xi \quad ,$$

$$\delta^2 I = 2(\delta A)\int (f_\Gamma \delta\Gamma + f_\beta \delta\beta)d\xi + A\int [f_{\Gamma\Gamma}(\delta\Gamma)^2 + 2f_{\Gamma\beta}\delta\Gamma\delta\beta + f_{\beta\beta}(\delta\beta)^2]d\xi \quad ,$$

in which the subindices denote partial differentiations, and all integrals are from $\xi = -1$ to 1. For $I[\Gamma, \beta; A]$ to be minimum, we must have $\delta I = 0$ and $\delta^2 I > 0$ for arbitrary $\delta\Gamma$ and δA. From $\delta I = 0$ it then follows that the two integrals in the expression for δI must vanish separately. The first integral vanishes if, by (22a),

$$L^* = \lambda_1 \ell + \lambda_2 S \quad , \tag{24a}$$

or explicitly,

$$\int_{-1}^{1} \Gamma(\xi)d\xi = \int_{-1}^{1} e^{\Gamma(\xi)}[\lambda_1 \cos\beta(\xi) + \lambda_2]d\xi \quad , \tag{24b}$$

which provides one condition for the constant multipliers λ_1, λ_2. (Note that the positive coefficient A drops out in (24b).) For the second integral, we substitute (23) for $\delta\beta$, then interchange the order of integration, which

is permissible under certain conditions (see, e.g., Tricomi 1957, §4.3), giving

$$\int_{-1}^{1} (f_\Gamma \delta\Gamma + f_\beta \delta\beta) d\xi = \int_{-1}^{1} (f_\Gamma - H_\xi[f_\beta]) \delta\Gamma(\xi) d\xi = 0 \quad . \tag{25}$$

Since $\delta\Gamma(\xi)$ is arbitrary, we obtain the following nonlinear singular integral equation of the Cauchy type:

$$f_\Gamma(\Gamma(\xi), \beta(\xi)) = H_\xi[f_\beta] = \frac{1}{\pi} \oint_{-1}^{1} \frac{f_\beta(\Gamma(t), \beta(t))}{t - \xi} dt \quad (|\xi| < 1) \quad , \tag{26a}$$

where, by (22b)

$$\frac{\partial f}{\partial \Gamma} = e^{\Gamma(\xi)}[\lambda_1 \cos\beta(\xi) + \lambda_2] - 1 \quad , \quad \frac{\partial f}{\partial \beta} = -\lambda_1 e^{\Gamma(\xi)} \sin\beta(\xi) \quad . \tag{26b}$$

For the extremal solution, (26) is to be solved together with (11), as a pair of singular integral equations for $\Gamma(\xi)$ and $\beta(\xi)$, subject to the homogeneous end conditions (8) and the inequality condition (7). The extremal solution, $\Gamma(\xi;\lambda_1,\lambda_2)$ and $\beta(\xi;\lambda_1,\lambda_2)$, when determined in this manner, will involve the two constant multipliers λ_1 and λ_2, which can be determined, most conveniently, by applying condition (24), and by giving a specified ratio of the arc-length S to the chord ℓ, say

$$S/\ell = 1 + \kappa \qquad (\kappa > 0) \quad , \tag{27a}$$

or, by using (16), (18),

$$\int_{-1}^{1} e^{\Gamma(\xi)} d\xi = (1+\kappa) \int_{-1}^{1} e^{\Gamma(\xi)} \cos\beta(\xi) d\xi \quad . \tag{27b}$$

Since the coefficient A does not appear in either of the isoperimetric conditions (24) and (27), the problem of determining the unknown A is curtailed altogether. Finally, the optimum lift coefficient, upon using (24a) and (27a), can be expressed as

$$C_L = L/(\tfrac{1}{2}\rho U^2 \ell) = 2L^*/\ell = 2\lambda_1 + 2\lambda_2(1+\kappa) \quad . \tag{28}$$

This optimum lift coefficient will be a maximum if the second variation of I satisfies the inequality condition $\delta^2 I > 0$, which is reduced to

$$\int_{-1}^{1} [f_{\Gamma\Gamma}(\delta\Gamma)^2 + 2f_{\Gamma\beta}\,\delta\Gamma\,\delta\beta + f_{\beta\beta}(\delta\beta)^2]\,d\xi > 0$$

upon incorporating (25) and noting that $A > 0$. A necessary condition for the above inequality to hold has been found by Whitney (1969) to be

$$f_{\Gamma\Gamma}(\Gamma(\xi),\beta(\xi)) + f_{\beta\beta}(\Gamma(\xi),\beta(\xi)) > 0 \qquad (-1 < \xi < 1) \quad . \qquad (29)$$

The procedure for obtaining this result is to first substitute (23) for the $\delta\beta$'s in the integrand, interchange the order of integration by the Poincaré-Bertrand formula, and, finally, to consider a special choice of $\delta\Gamma(\xi)$ which vanishes everywhere except on an infinitesimal stretch in $(-1<\xi<1)$. For the present problem, with f given by (22b), (29) gives

$$f_{\Gamma\Gamma} + f_{\beta\beta} = \lambda_2 e^{\Gamma(\xi)} > 0 \quad , \qquad \text{or simply} \qquad \lambda_2 > 0 \quad , \qquad (30)$$

since the optimum solution Γ is real. It may be remarked here that C_L in (28) will be a minimum when $\lambda_2 < 0$. Condition (30) also shows the importance of including the arc-length S as a constraint; otherwise, the necessary condition (29) cannot be satisfied, and the consideration of optimality must necessarily proceed to higher order variations of the functional I, to say the least.

The exact solution of this problem is exceedingly difficult for several reasons. First of all, (11) and (26) are a system of nonlinear singular integral equations, with a Cauchy kernel, which have no known general method of solution. Second, it appears to be very difficult to incorporate automatically the inequality condition (7), $\Gamma(\xi) \geqslant 0$ for $|\xi| < 1$, into the analysis, the only alternative being to verify its validity if and when all possible solutions for Γ have been obtained. Furthermore, there is no assurance that the homogeneous end conditions (8), $\Gamma(1) = \Gamma(-1) = 0$, can always be satisfied. Finally, even when the solution of Γ satisfying all these conditions can be obtained, the determination of the multipliers λ_1, λ_2 from (24), (27) will involve equations which are

highly transcendental. The foregoing observations should indicate that any plausible method of solution by numerical iterations would most likely meet great resistance.

However, important information about the solution can be obtained from the corresponding linearized theory, which we proceed to consider in the following.

4. The Linearized Theory (for $(S-\ell)/\ell \ll 1$)

The linearized theory is expected to provide a valid first order solution to $\Gamma(\xi)$ and $\beta(\xi)$ when the arc length S is only slightly greater than the chord ℓ, or

$$S/\ell = 1 + \kappa \quad , \qquad 0 < \kappa \ll 1 \quad . \tag{31}$$

In this limit, $\Gamma(\xi)$ and $\beta(\xi)$ are anticipated to be almost everywhere small on $(-1 < \xi < 1)$, except possibly near the end points $\xi = \pm 1$. Thus, upon expanding f_Γ and f_β for small $|\Gamma|$ and $|\beta|$, and keeping only the linear terms, Eq. (26) reduces to

$$a\Gamma(\xi) = c\, H_\xi[\beta(t)] + (1-a) \qquad (|\xi| < 1) \quad , \tag{32a}$$

where

$$a = \lambda_1 + \lambda_2 \quad , \quad c = -\lambda_1 \quad . \tag{32b}$$

The linear system of singular integral equations (32) and (11) belongs to the class investigated previously by the authors (see Part I, Sect. 5), a class which can be uncoupled to yield a set of singular integral equations of the Carleman type and then solved by known methods. Without going through the detailed analysis, we give below the final solution, which can be readily verified. The solution has two branches according as the coefficient

$$\sigma = c/a = -\lambda_1/(\lambda_1 + \lambda_2) > 0 \quad \text{or} \quad < 0 \quad . \tag{33}$$

<u>Case (i)</u> $\sigma > 0$. The ranges of λ_1 and λ_2 in this case are either

$$\lambda_2 > -\lambda_1 > 0 \quad \text{or} \quad \lambda_2 < -\lambda_1 < 0 \quad ; \tag{34}$$

the first, according to the necessary condition (30), corresponds to the

maximum lift, whereas the second, to the minimum lift. In terms of the new parameters, γ and μ, defined by

$$\gamma = (1-a)/a \qquad \text{and} \qquad \tan\mu\pi = \sigma^{\frac{1}{2}} \qquad (0 < \mu < 1/2) \quad , \tag{35}$$

the solution is given by

$$\Gamma(\xi) = \frac{\gamma}{2} \cos\mu\pi \left[\left(\frac{1-\xi}{1+\xi}\right)^{\mu} + \left(\frac{1-\xi}{1+\xi}\right)^{-\mu}\right] \quad , \tag{36a}$$

$$\beta(\xi) = \frac{\gamma}{2} \cos\mu\pi \cot\mu\pi \left[\left(\frac{1-\xi}{1+\xi}\right)^{\mu} - \left(\frac{1-\xi}{1+\xi}\right)^{-\mu}\right] \quad . \tag{36b}$$

This solution is readily verified by making use of the formula

$$H_{\xi}\left[\left(\frac{1-\xi}{1+\xi}\right)^{\pm\mu}\right] = \pm \cos\mu\pi \mp (\cot\mu\pi)\left(\frac{1-\xi}{1+\xi}\right)^{\pm\mu} \qquad (|\xi| < 1) \quad ,$$

which can be derived directly by contour integration of $(t-1)^{\mu}(t+1)^{-\mu}(t-\xi)^{-1}$ in the complex t-plane (or see Tricomi (1957), p. 181). We note that the above solution satisfies the inequality condition (7), i.e. $\Gamma(\xi) > 0$ $(|\xi| < 1)$, but is singular, with a branch-type singularity, at the end points $\xi = \pm 1$, and thus fails to satisfy the homogeneous end condition (8). This singular feature of the solution is perhaps reasonable, since linearization generally introduces singularities at those points where the assumptions of linearization are violated. Whether these singularities can be removed by including the nonlinear terms remains to be seen.

We now determine the Lagrange multipliers λ_1, λ_2 from (24) and (27). To be consistent within the framework of the linearized theory, all the nonlinear functions in the integrands of (24b) and (27b) will be expanded for small $|\Gamma|$ and $|\beta|$ up to the quadratic terms, because the linear integral equation (32) actually follows from (26) by expanding the fundamental function $f(\Gamma, \beta)$ up to the terms with Γ^2, $\Gamma\beta$, and β^2. Thus, (24b) and (27b) reduce, after some rearrangement, respectively to

$$2 - \gamma \int_{-1}^{1} \Gamma(\xi)d\xi + \frac{1}{2}\int_{-1}^{1} \Gamma^2(\xi)d\xi + \frac{1}{2}\sigma\int_{-1}^{1} \beta^2(\xi)d\xi = 0 \quad , \tag{37}$$

$$2 + \int_{-1}^{1} \Gamma(\xi)d\xi + \frac{1}{2}\int_{-1}^{1} \Gamma^2(\xi)d\xi - \frac{1+\kappa}{2\kappa}\int_{-1}^{1} \beta^2(\xi)d\xi = 0 \quad ,$$

where σ and γ are defined by (33) and (35). The difference between the above two equations gives

$$\int_{-1}^{1} \Gamma(\xi)d\xi = \frac{1}{2}\left(\frac{\lambda_1}{\kappa} + \lambda_2 \frac{1+\kappa}{\kappa}\right)\int_{-1}^{1} \beta^2(\xi)d\xi \quad , \tag{38}$$

which can be used with (37) as two isoperimetric conditions. The integrals involved in (37), (38) are easily found from the solution (36) as

$$\int_{-1}^{1} \Gamma(\xi)d\xi = 2\gamma\mu\pi\sigma^{-\frac{1}{2}} \quad ,$$

$$\int_{-1}^{1} \Gamma^2(\xi)d\xi = \gamma^2[\mu\pi\sigma^{-\frac{1}{2}} + (1+\sigma)^{-1}] \quad ,$$

$$\int_{-1}^{1} \beta^2(\xi)d\xi = \gamma^2\sigma^{-1}[\mu\pi\sigma^{-\frac{1}{2}} - (1+\sigma)^{-1}] \quad .$$

Substitution of these integrals in (37) and (38) yields

$$\gamma^2\mu\pi = 2\sigma^{\frac{1}{2}} \quad , \tag{39}$$

$$4k = \gamma\left(\frac{\lambda_1}{\kappa} + \lambda_2 \frac{1+\kappa}{\kappa}\right)\left[1 - \frac{\sigma^{\frac{1}{2}}}{(1+\sigma)\mu\pi}\right] \quad . \tag{40}$$

These two equations determine λ_1 and λ_2 in terms of κ; however, it is it is more convenient to express λ_1 and λ_2 in terms of the parameter σ. From (33), (35), and (39), we have

$$\lambda_1 = -\sigma/(1+\gamma)$$

$$\lambda_2 = (1+\sigma)/(1+\gamma) \quad ,$$

where

$$\gamma = \pm[2\sigma^{\frac{1}{2}}/\tan^{-1}(\sigma^{\frac{1}{2}})]^{\frac{1}{2}}$$

and the + sign is for maximum lift, the - sign for minimum lift.

Substituting these expressions for λ_1, λ_2, and γ, into (28), and (40), the optimal lift coefficient C_L as a function of κ is given parametrically by

$$C_L = \pm 2[8\tan^{-1}(\sigma^{\frac{1}{2}})/\sigma^{\frac{1}{2}}]^{\frac{1}{2}}/\ell(\sigma) \tag{41a}$$

$$\kappa = \left[\frac{\sigma^{\frac{1}{2}}}{(1+\sigma)\tan^{-1}(\sigma^{\frac{1}{2}})} - \frac{1}{\sigma^{\frac{1}{2}}\tan^{-1}(\sigma^{\frac{1}{2}})} + \frac{1}{\sigma}\right]\Big/\ell(\sigma) \quad , \tag{41b}$$

where the common denominator is

$$\ell(\sigma) = 3 \pm \left[\frac{8\tan^{-1}(\sigma^{\frac{1}{2}})}{\sigma^{\frac{1}{2}}}\right]^{\frac{1}{2}} + \frac{1}{\sigma^{\frac{1}{2}}\tan^{-1}\sigma^{\frac{1}{2}})} - \frac{1}{\sigma} \quad . \tag{41c}$$

The maximum lift coefficient (+ sign in (41)) as a function of κ is shown in Fig. 2. The following limiting cases are of special interest.

(ia) $\kappa \to 0+$ $(\sigma \to +\infty)$

By reducing κ to zero, the plate is constrained to be nearly stretched straight, implying that Γ and $\beta = O(\Gamma)$ are both small. Setting $\sigma = \epsilon^{-2} \gg 1$, we deduce from (39), and (41b, c), that

$$\mu = \frac{1}{2} - \frac{\epsilon}{\pi} + O(\epsilon^3) \quad , \qquad \gamma = \pm 2(\epsilon\pi)^{-\frac{1}{2}}\left[1 + \frac{\epsilon}{\pi} + O(\epsilon^2)\right] \tag{42}$$

and

$$\epsilon = (3\kappa)^{\frac{1}{2}}\left[1 \pm \frac{1}{3}(3\pi^2\kappa)^{\frac{1}{4}} + O(\kappa^{\frac{1}{2}})\right] \quad .$$

Finally, the optimal lift coefficient, by (41a), is

$$C_L = \pm \frac{4}{3}(3\pi^2\kappa)^{\frac{1}{4}}\left[1 \mp \frac{1}{2}(3\pi^2\kappa)^{\frac{1}{4}} + O(\kappa^{\frac{1}{2}})\right] \quad .$$

This optimum solution shows that as soon as κ increases from zero, the plate starts to bend more near the two ends and carries most of the lift there, since, by (36) and (42), both Γ and β have square-root singularities at $\xi = \pm 1$. As the arc-length S further increases for fixed chord ℓ, κ

and ϵ become greater, μ smaller, so that the singularities at the ends then become weaker. The rate of increase of the optimum lift with respect to increasing κ, $dC_L/d\kappa$, behaves like $\kappa^{-3/4}$ as $\kappa \to 0$.

(ib) $0 < \sigma \ll 1$.

Another interesting limit is as $\sigma \to 0+$, in which case we find

$$\mu = \frac{1}{\pi}\sigma^{\frac{1}{2}}\left[1 - \frac{1}{3}\sigma + O(\sigma^2)\right] \quad , \quad \gamma = \pm\sqrt{2}\left[1 + \frac{1}{6}\sigma + O(\sigma^2)\right] \tag{43a}$$

$$\kappa = \frac{1}{7}(5 \mp 3\sqrt{2})\left[1 - \frac{3\sigma}{10}(4 \mp \sqrt{2}) + O(\sigma^2)\right] \quad . \tag{43b}$$

Here, the upper (or lower) sign is for the maximum (or minimum) lift coefficient, which is obtained from (41a, c) as

$$C_L = \pm\frac{6}{7}(5\sqrt{2} \mp 6)\left[1 - \frac{\sigma}{10}(5 \mp 3\sqrt{2}) + O(\sigma^2)\right] \quad . \tag{44}$$

In the limit as $\sigma \to 0+$, the maximum lift coefficient

$$C_{L\,max} \simeq 0.918(1-0.076\sigma) \quad \text{at} \quad \kappa = 0.1082(1-0.776\sigma) \tag{45}$$

appears to be very respectable, particularly for such a small κ. On the other hand, it seems rather questionable whether the minimum lift coefficient

$$C_{L\,min} \simeq -11.20(1-0.924\sigma) \quad \text{at} \quad \kappa = 1.320(1-1.624\sigma) \tag{46}$$

can even be close to any physically realizable situation because the low pressure underneath the plate would most likely cause air to ventilate the entire lower surface of the plate.

The corresponding solution of Γ and β can be immediately deduced from (36) as

$$\Gamma(\xi) = \pm\sqrt{2}\left\{1 + \frac{\sigma}{2}\left[\frac{1}{\pi^2}\left(\log\frac{1-\xi}{1+\xi}\right)^2 - \frac{2}{3}\right] + O(\sigma^2)\right\} \quad . \tag{47}$$

$$\beta(\xi) = \pm \frac{\sqrt{2}}{\pi} \log\left(\frac{1-\xi}{1+\xi}\right)\left\{1 + \frac{\sigma}{6}\left[\frac{1}{\pi^2}\left(\log\frac{1-\xi}{1+\xi}\right)^2 - 1\right] + O(\sigma^2)\right\} . \tag{48}$$

Thus, in this limit, the flow angle $\beta(\xi)$ has a logarithmic singularity at the end points $\xi = \pm 1$, which are of the weakest type singularity in this linearized theory. This particular profile of the plate results in a constant pressure distribution over the plate except for a higher order logarithmic singularity at the two edges. The over-all features of the solution in the present limiting case therefore indicate that this is the most favorable optimum state arrived at when the variation of parameter κ is considered in this final stage.

<u>Case (ii)</u> $-1 < \sigma < 0$. The ranges of λ_1 and λ_2 now become either

$$(\lambda_1 > 0, \quad \lambda_2 > 0) \quad \text{or} \quad (\lambda_1 < 0, \quad \lambda_2 < 0) , \tag{49}$$

corresponding, respectively, to the maximum and minimum lift. In terms of the parameter ν defined by

$$\tanh \nu\pi = (-\sigma)^{\frac{1}{2}} \qquad (\nu > 0) , \tag{50}$$

the solution of (11) and (32) for this case is found as

$$\Gamma(\xi) = \gamma \cosh \nu\pi \cos\left(\nu \log\frac{1-\xi}{1+\xi}\right) , \tag{51}$$

$$\beta(\xi) = \gamma \cosh \nu\pi \coth \nu\pi \sin\left(\nu \log\frac{1-\xi}{1+\xi}\right) , \tag{52}$$

where the coefficient γ is given by (35). This solution can be immediately verified by making use of the formulae

$$H_\xi\left[\sin\left(\nu \log\frac{1-t}{1+t}\right)\right] = \operatorname{csch} \nu\pi - \coth \nu\pi \cos\left(\nu \log\frac{1-\xi}{1+\xi}\right) , \tag{53}$$

$$H_\xi\left[\cos\left(\nu \log\frac{1-t}{1+t}\right)\right] = \coth \nu\pi \sin\left(\nu \log\frac{1-\xi}{1+\xi}\right) . \quad (|\xi| < 1) . \tag{54}$$

The above inversion formulae can be derived by a contour integration of $(t-1)^{i\nu}(t+1)^{-i\nu}(t-\xi)$ encircling the real axis from $t = -1$ to 1 in the

complex t-plane.

Although both of the above Γ and β remain bounded in $-1 \leqslant \xi \leqslant 1$, they nevertheless oscillate infinitely fast as the end points $\xi = \pm 1$ are approached, and hence do not satisfy the inequality condition (7), which is imposed on physical grounds. For this reason the above solution is regarded as void of any physical significance, and hence will not be further pursued here, although it also tends to the limiting solution (47), (48) as $\sigma \to 0$. However, mentioning of this case may serve a useful purpose to point out that when a numerical iteration method is employed, particularly for small values of σ, the iterated solutions may oscillate between the two cases (ib) and (ii) and the success of such procedure may be hindered by the lack of convergence.

5. Discretized Fourier Series Expansions

We next consider a method for obtaining approximate solutions to the optimum shape problem by expanding $\Gamma(\xi)$ and $\beta(\xi)$ in finite Fourier series with the coefficients chosen so that the lift is maximized under the previously mentioned isoperimetric constraints of fixed chord and fixed wetted arc-length. This Rayleigh-Ritz method of solution has been discussed previously in Part I.

Let the expansion for $\Gamma(\xi)$ be given by

$$\Gamma(\xi) = \sum_{n=1}^{N} a_n \sin(2n-1)\theta \quad , \tag{55}$$

where $\xi = \cos\theta (0 \leqslant \theta \leqslant \pi)$ and the a_n's are arbitrary real constants. This choice for Γ automatically satisfies the end conditions (8). From (11), $\beta(\xi)$ is given by

$$\beta(\xi) = -\sum_{n=1}^{N} a_n \cos(2n-1)\theta \quad , \tag{56}$$

where we have changed variables ($\xi = \cos\theta$, $t = \cos\varphi$) and made use of the identity

$$\oint_0^{\pi} \frac{\sin m\varphi \, \sin\varphi}{\cos\varphi - \cos\theta} \, d\varphi = -\pi \cos m\theta \quad .$$

Note that even order Fourier components have been omitted from the above expansions to satisfy the symmetry properties (21).

The problem of maximizing the lift for fixed arc-length and chord is equivalent to minimizing the function I in (22), which, by (55) and (56), may now be considered to be an ordinary function of the coefficients $\{a_n\}$ and the factor A. To minimize I we set the partial derivatives of I with respect to A and each of the a_n's to zero, giving (since A does not vanish)

$$\frac{\partial I}{\partial A} = \frac{I}{A} = \lambda_1 \int_0^{\pi} e^{\Gamma} \cos\beta \, \sin\theta \, d\theta + \lambda_2 \int_0^{\pi} e^{\Gamma} \sin\theta \, d\theta - \frac{\pi}{2} a_1 = 0 \tag{57}$$

$$\frac{I}{A} \frac{\partial I}{\partial a_n} = \lambda_1 \int_0^{\pi} e^{\Gamma} \sin[\beta + (2n-1)\theta] \sin\theta \, d\theta$$

$$+ \lambda_2 \int_0^{\pi} e^{\Gamma} \sin(2n-1)\theta \sin\theta \, d\theta - \frac{\pi}{2} \delta_{n1} = 0 \qquad n = 1, 2, \ldots, N \; . \tag{58(n)}$$

The (N+1)-equations above, in which Γ and β are given by (55) and (56), together with (27) in which κ is given, determine the N Fourier coefficients $\{a_n\}$ and the two Lagrange multipliers λ_1, λ_2. Finally, the lift coefficient is given by (28). Since (57) and (58) are transcendental in the unknown Fourier coefficients the solutions must be found numerically.

In order to illustrate this method we consider the case N = 2. Equations (58) read as follows :

$$\lambda_1 \int_0^{\pi} e^{\Gamma} \sin(\beta + \theta) \sin\theta \, d\theta + \lambda_2 \int_0^{\pi} e^{\Gamma} \sin^2\theta \, d\theta = \frac{\pi}{2} \tag{58(1)}$$

$$\lambda_1 \int_0^{\pi} e^{\Gamma} \sin(\beta + 3\theta) \sin\theta \, d\theta + \lambda_2 \int_0^{\pi} e^{\Gamma} \sin 3\theta \sin\theta \, d\theta = 0 \; . \tag{58(2)}$$

These equations are to be solved together with (27) and (57) for a_1, a_2, λ_1, and λ_2. The Lagrange multipliers may be eliminated from (57), (58(1)),

and (58(2)) to give a relation between a_1 and a_2; namely,

$$f(a_1, a_2) = a_1\left[\int_0^\pi e^\Gamma \sin(\beta+\theta)\sin\theta\, d\theta \int_0^\pi e^\Gamma \sin 3\theta \sin\theta\, d\theta - \int_0^\pi e^\Gamma \sin(\beta+3\theta)\sin\theta\, d\theta \int_0^\pi e^\Gamma \sin^2\theta\, d\theta\right]$$

$$- \int_0^\pi e^\Gamma \sin 3\theta \sin\theta\, d\theta \int_0^\pi e^\Gamma \cos\beta \sin\theta\, d\theta + \int_0^\pi e^\Gamma \sin(\beta+3\theta)\sin\theta\, d\theta \int_0^\pi e^\Gamma \sin\vartheta\, d\theta = 0 \quad . \tag{59}$$

A second relation between a_1 and a_2 is given by (27b) in which κ is given a specific value; however, it is somewhat easier to do the inverse problem in which κ is determined once a_1 is known. Thus, if a_1 is given, a_2 is determined by (59), and κ is then fixed by (27b). Finally, C_L may be found from (28), (20), and (16) (with $\alpha = 0$).

The curve of a_2 versus a_1 satisfying (59) is shown in Fig. 3 and the lift coefficient for the two-term Fourier expansion is plotted in Fig. 2. As $a_1 \to 0$, it can be shown by expansion of (27b), (28), and (59) for $|a_1|, |a_2| \ll 1$, that

$$a_2 = \frac{7}{17} a_1 + O(a_1^2) \quad ,$$

and

$$C_{Lmax} = \frac{\pi}{2}\sqrt{\frac{1785}{371}}\, \kappa^{1/2} + O(\kappa^{3/2}) \quad \text{as} \quad \kappa \to 0 \quad .$$

Thus, the maximum lift coefficient increases more slowly (with increasing κ) for the two-term Fourier expansion than for the linearized theory of the previous section (see (42a)). This is thought to be due to the previously mentioned end point singularities which are present in the linearized theory.

Actual plate shapes for the case $N = 2$ are shown in Fig. 4 for various values of κ (note change of vertical scale). These are found by

numerically evaluating (15) for real ζ. The factor A in (15) drops out after normalization of the chord to unity. Note that the maximum height of the plate occurs at two symmetrically located points (at the X's in Fig. 4) for smaller values of κ ($\lesssim 0.030$).

The cases N = 3, 4, . . . , etc., could, in theory, be solved as outlined above and should result in higher and higher lift coefficients for a given ratio of arc-length to chord; however, the calculational difficulties involved in the solution of the system of equations (57) and (58) would surely increase. Fortunately, the numerical experiments in Part I indicate that just a few terms in the Fourier expansions are needed to give results which are within one per cent of exact solutions in those specific examples.

Acknowledgment

This work was sponsored by the Naval Ship System Command General Research and Development Center and the Office of Naval Research, under Contract Nonr-220(51).

References

Cumberbatch, E. 1958 Two-dimensional planing at high Froude number. J. Fluid Mech. 4, 466.

Muskhelishvili, N.I. 1953 Singular Integral Equations. Groningen, Holland: Noordhoff.

Rispin, P.P.A. 1967 A singular perturbation method for nonlinear water waves past an obstacle. Ph.D. Thesis, Calif. Inst. of Tech.

Tricomi, F.G. 1957 Integral Equations. New York: Interscience Publishers.

Wehausen, J.V. and Laitone, E.V. 1960 Surface Waves. Handbuch der Physik, Vol IX. Berlin: Springer-Verlag.

Whitney, A.K. 1969 Minimum drag profiles in infinite cavity flows. Ph.D. Thesis, Calif. Inst. of Tech.

Wu, T.Y. 1967 A singular perturbation theory for nonlinear free surface flow problems. International Shipbuilding Progress, 14, 88 - 97.

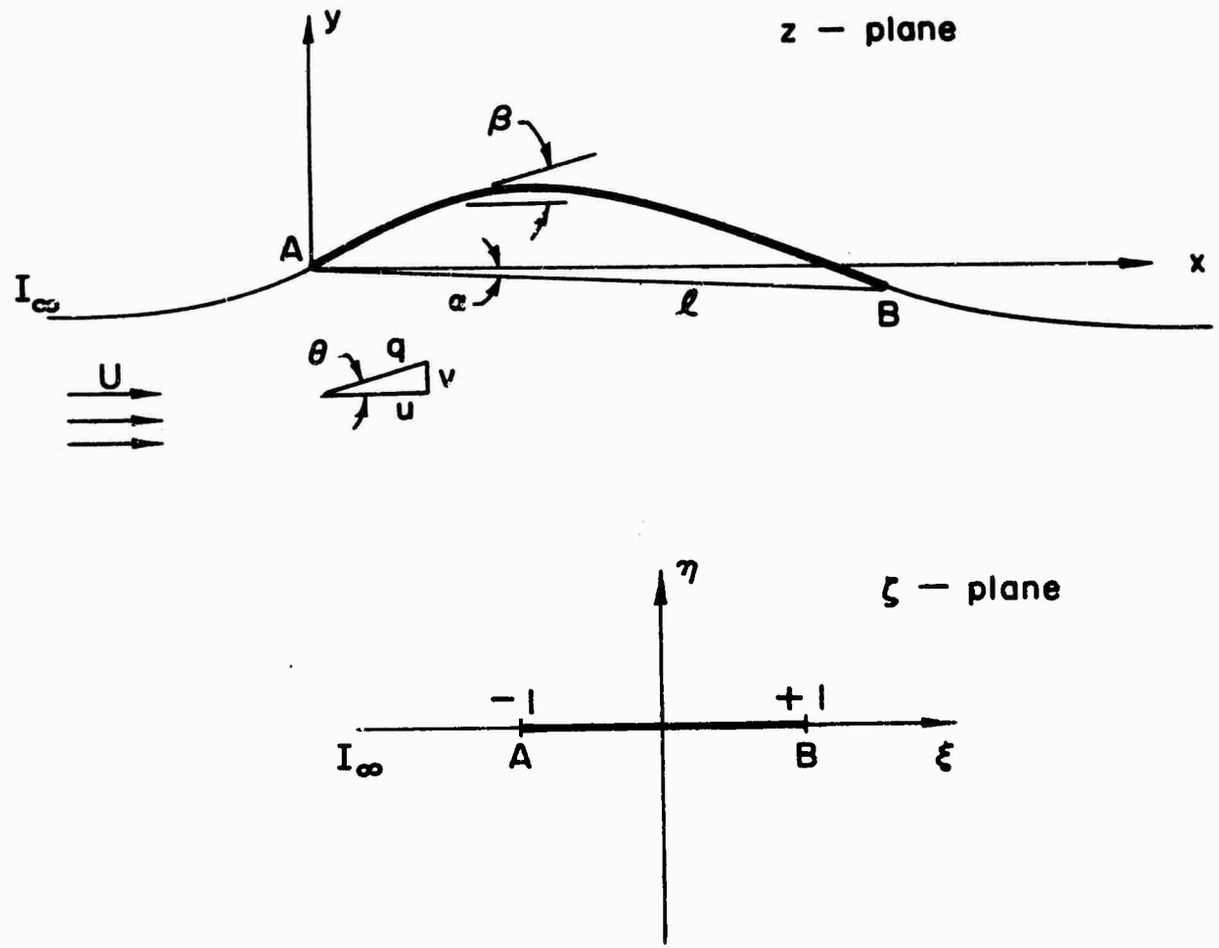

Fig. 1 The physical and parametric planes.

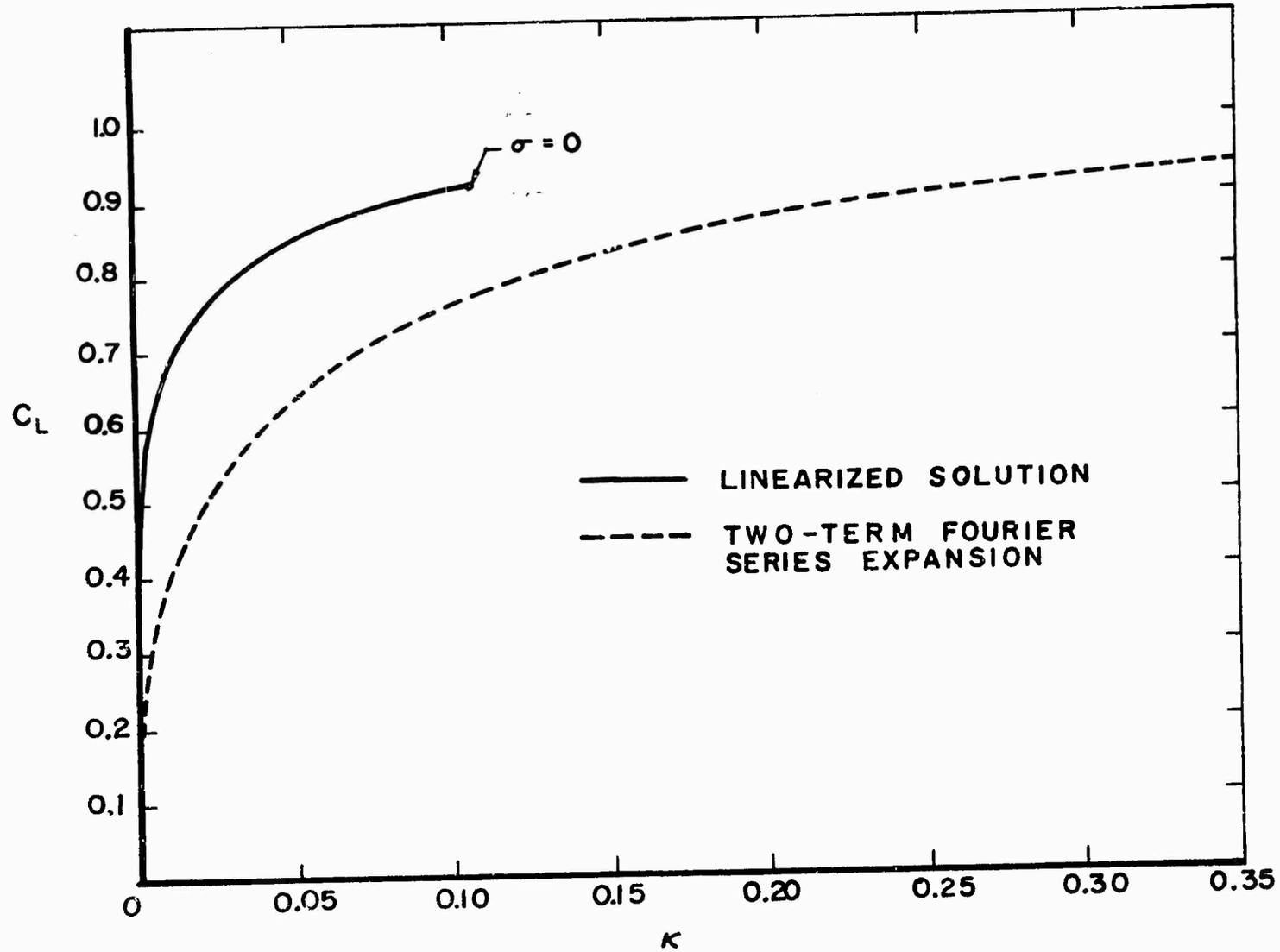

Fig. 2 Optimum lift coefficient C_L versus $\kappa = S/\ell - 1$ for the linearized theory and the two-term, nonlinear Fourier series expansion.

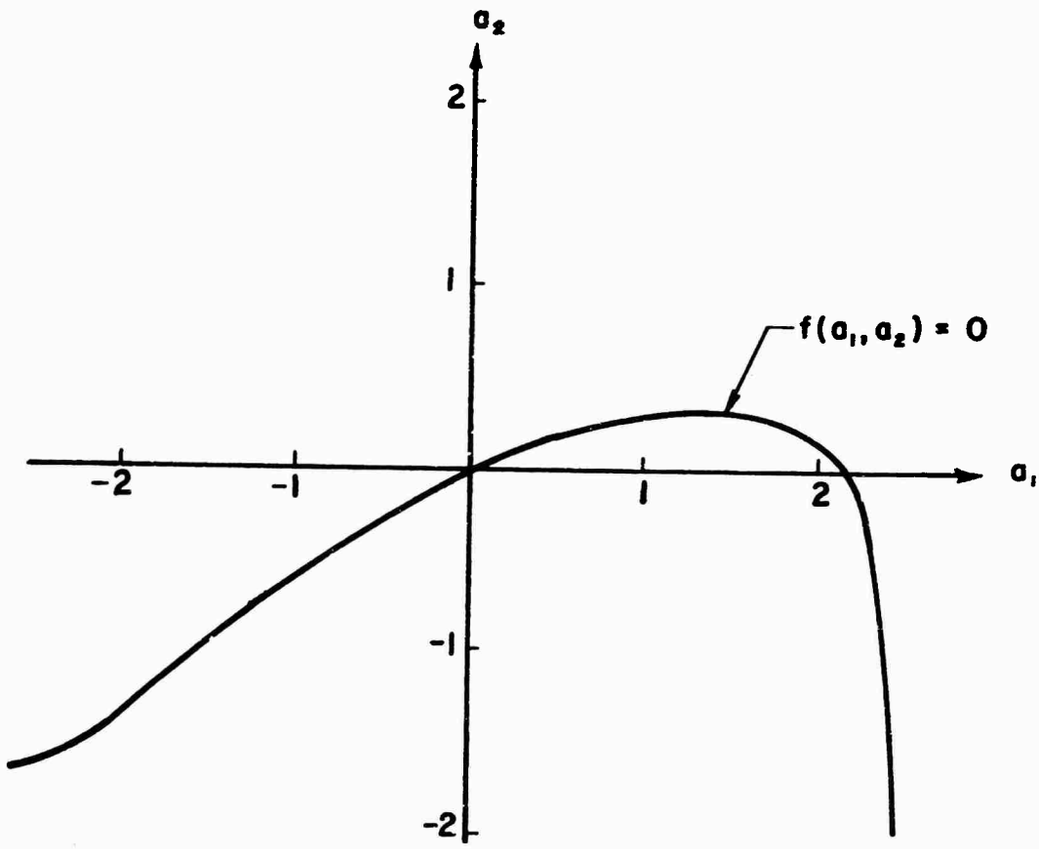

Fig. 3 The plot of $f(a_1, a_2) = 0$ in the two-term Fourier series expansion.

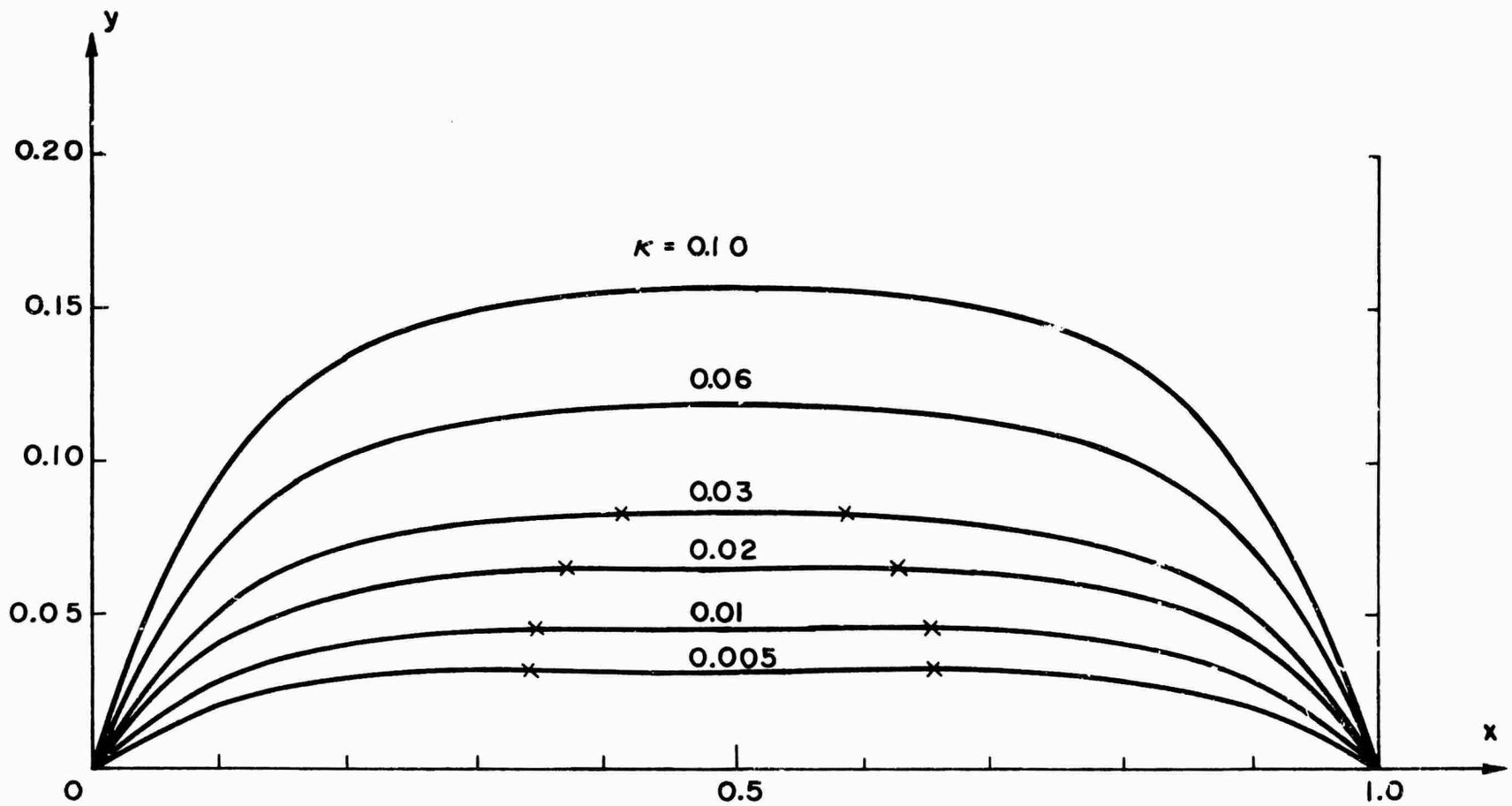

Fig. 4 Optimum planing surface shapes for the two-term Fourier expansion (x's denote maximum heights).

THEORY OF OPTIMUM SHAPES IN FREE-SURFACE FLOWS

PART III

Minimum Drag Profiles in Infinite Cavity Flow

by

Arthur K. Whitney

California Institute of Technology
Pasadena, California

The problem considered here is that of determining the shape of a symmetric two-dimensional plate so that the drag of this plate in infinite cavity flow is a minimum. The flow is assumed to be steady and irrotational; effects due to gravity are ignored. With the aid of a recently developed theory of variational calculus involving singular integral equations, the drag of the plate is minimized under the constraints that the width and wetted arc length of the plate are fixed. The extremization process yields, in anology with the classical Euler differential equation, a pair of coupled nonlinear singular integral equations. Although analytical and numerical attempts to solve these equations prove to be unsuccessful, analysis of the equations shows that the optimal plate shapes must have blunt noses. Finally, optimal shapes are obtained by Fourier series expansions for various ratios of arc length to plate width.

1. Introduction

We consider the two-dimensional cavity flow of an incompressible fluid past a plate of arbitrary shape. The flow far upstream is uniform with velocity U, pressure p_∞, and density ρ. The pressure p_c inside the cavity is assumed to be a constant, so that by Bernoulli's law the fluid velocity at the cavity wall is a constant V, where

$$\frac{1}{2}\rho V^2 + p_c = \frac{1}{2}\rho U^2 + p_\infty \quad .$$

The cavity flow may be characterized by the non-dimensional cavitation number

$$\sigma = (p_\infty - p_c)/\ \frac{1}{2}\rho U^2 \quad .$$

As the cavitation number decreases, the length and width of the cavity grow indefinitely and the flow approaches the "Helmholtz flow", in which the cavity is infinitely long and the cavity pressure equals the free stream pressure $(\sigma = 0)$ so that the cavity is maintained far downstream.

The specific problem considered here is to find the shape of a symmetric plate (see Fig. 1) of given wetted arc length S_o and given width y_o, so that the drag of this plate in infinite cavity flow $(\sigma = 0)$ is a minimum. A precise definition of the class of plates under consideration will be given in the next section. The solution of this problem has obvious applications in the design of struts or other two-dimensional non-lifting surface which may operate in the super-cavitating range. For large Reynold's number flows, the viscous effects may be ignored as a first approximation; however, corrections due to viscous drag can be calculated once the potential flow is known. Finally, although optimal shapes are sought for the case $\sigma = 0$, these shapes should be approximately the same as those which would be found for $\sigma > 0$. This can be seen by considering the approximate rule, $C_D(\sigma) = C_D(0)(1+\sigma)$, which relates the drag coefficient C_D at $\sigma = 0$ to the drag coefficient for $\sigma > 0$. (Here, $\sigma < 1$, see, e.g. Gilbarg 1960). Thus, to minimize C_D at a given $\sigma > 0$, we could just as well minimize $C_D(0)$. It should be noted that this rule appears to be a good approximation only for blunt bodies, so the above argument may be limited to the case when the arc length is not much larger than the width of the plate.

Lavrentieff (1938) gave the solution to a related minimum drag problem (see, e.g. Gilbarg (1960)), that of finding the shape of a symmetric plate of minimum drag, although, in Lavrentieff's problem, the plate is confined to lie within a rectangle which circumscribes the nose and ends of the plate. If the nose of the plate is at (0, 0) and the

ends of the plate are at $(x_o, \pm y_o/2)$, the solution for the optimal profile (see Fig. 2) is found to consist of a straight section, from $(0, -h/2)$ to $(0, h/2)$, and the free streamlines which leave the ends of this section and go on to pass through $(x_o, \pm y_o/2)$. The length of the flat nose section, h, is uniquely determined by the given x_o/y_o. The pressure difference across the flat portion of the plate is the only contribution to the drag since the fluid pressure equals the cavity pressure $(p = p_c)$ on the free streamlined sections of the plate. This solution was obtained by the use of several comparison and monotonicity theorems which follow from the maximum principle for harmonic functions.

The present work was originally conceived as a confirmation of Lavrentieff's solution, but it was hoped that this could be done by using the variational calculus method introduced earlier in Parts I and II; however, no satisfactory method was found for imposing the condition that the plate be confined to lie within the rectangle. On the other hand, if this constraint is dropped, one can easily construct a sequence of plate shapes which, in the limit, have zero drag, neglecting viscous effects, of course. Such a sequence is illustrated in Fig. 3. A typical plate consists of an inverted cap of width h_1 and length h_2 plus the free streamlines which issue from the ends of the cap and go on to pass through the corners of the rectangle. All other plate shapes in this sequence are found by decreasing h_1 and increasing h_2 in such a way that the free streamlines still pass through $(x_o, \pm y_o/2)$. As $h_1 \to 0$, the flow inside the cap becomes a dead water region with stagnation pressure $p_s = \frac{1}{2}\rho U^2 + p_\infty$, so that the drag of the plate is just $\frac{1}{2}\rho U^2 h_1$, which can be made very small by choosing h_1 sufficiently small. Note that the pressure difference across the back face of the cap is the only contribution to the drag of the plate.

This observation led the author to consider the problem described earlier. It was thought that by fixing the arc length of the plate, shapes such as those described above would be eliminated. The constraint on the length of the plate was dropped for simplification.

2. The Problem of the Symmetric Cavitating Plate

The class of flows under consideration is limited to infinite cavity flows past plates P with the following properties (see Fig. 1):

(a) The width of P is y_o.

(b) The arc length of P is s_o.

(c) P has a continuous slope except at the nose where the vertex angle is 2α, with $0 \leqslant \alpha \leqslant \pi$.

(d) Let S and S' be points on the intervals OA and OA', respectively. The pressure p on S'OS satisfies $p \geqslant p_c$, while on SA and S'A', $p = p_c$; that is, SA and S'A' are free streamlines.

(e) P is coincident with the free streamlines which issue from S and S'.

The condition $p \geqslant p_c$ in (d) is an obvious statement of the fact that the vapor pressure (assumed to equal p_c) is the minimum pressure in the flow. Sections SA and S'A' are included since free streamlines have already been shown to make up part of Lavrentieff's profiles and similar results are expected for the present problem. It is more convenient to account for this expectation from the beginning than not. Note, also, that (d) imposes no undue restrictions on the problem, since the actual locations of S and S' are not known, a priori, but must be found as part of the optimization process.

Condition (e) guarantees that the shape of an optimal profile will be unique, since the plate surfaces SA and S'A' could obviously be moved inward toward the x-axis without changing the overall forces on the plate. This condition simply provides a one-to-one relationship between plate shapes and the resultant flow patterns. Note that there are many ways of doing this; the plate surface could, for example, be required to run along the straight lines joining S, A and S', A'.

By proper choice of origin and magnification, the complex potential plane $f = \varphi + i\psi$ is mapped to the upper half $\zeta = \xi + i\eta$ plane (see Fig. 4) by

$$f = \frac{1}{2} AU\zeta^2 \quad , \tag{1}$$

where φ is the velocity potential, ψ is the stream function, and A is a real, positive constant which is chosen so that S'OS maps to $|\xi| \leqslant 1$. The sections SA and S'A' map to $1 \leqslant |\xi| \leqslant c$, where $c \geqslant 1$ (equality only if $S = A$, $S' = A'$); the remaining sections of the free streamlines lie on $c \leqslant |\xi| < \infty$.

We next introduce the complex velocity

$$w = df/dz = u - iv = qe^{-i\theta} \tag{2}$$

and the logarithmic hodograph variable

$$\begin{aligned} \omega(\zeta) &= \log(U/w) = \log(U/q) + i\theta \\ &\equiv \tau(\xi,\eta) + i\theta(\xi,\eta) \quad , \end{aligned} \tag{3}$$

where u and v are the x and y components of the fluid velocity, $q = (u^2 + v^2)^{\frac{1}{2}}$ is the speed, and θ is the direction of the flow with respect to the positive x-axis. With these definitions, Bernoulli's law may be written as

$$p - p_c = \frac{1}{2} \rho(U^2 - q^2) = \frac{1}{2} \rho U^2 (1 - e^{-2\tau}) \quad , \tag{4}$$

where p is the pressure at any point in the flow. On the free streamlines SI and S'I', $p \equiv p_c$; therefore, by (4),

$$\tau(\xi, 0+) = 0 \quad , \qquad |\xi| \geqslant 1 \quad . \tag{5}$$

If the boundary value of ω on S'OS is denoted by

$$\omega(\xi + i0) = \tau(\xi, 0+) + i\theta(\xi, 0+) \equiv \Gamma(\xi) + i\beta(\xi) \quad , \qquad |\xi| \leqslant 1 \quad , \tag{6}$$

where Γ and β are real, then, since p_c is the minimum pressure in the flow, the inequality

$$\Gamma(\xi) \geqslant 0 \quad , \qquad |\xi| \leqslant 1 \quad , \tag{7}$$

follows by (4), and, because the pressure is continuous at S and S',

$$\Gamma(\pm 1) = 0 \quad . \tag{8}$$

The hodograph variable may be split into two parts, $\omega(\zeta) = \omega_o(\zeta) + \omega_1(\zeta)$, where ω_o accounts for the singular behavior of ω at the stagnation point, $\zeta = 0$, and $\omega_1 (\equiv \Gamma_1 + i\beta_1$, for $|\xi| \leqslant 1)$ is analytic in the entire upper half plane including the real axis. It can be shown, in fact, that

$$\omega(\zeta) = \frac{2\alpha}{\pi} \log \{[(\zeta^2 - 1)^{\frac{1}{2}} + i]/\zeta\} + \omega_1(\zeta) \quad , \tag{9}$$

where $(\zeta^2 - 1)^{\frac{1}{2}}$ is taken to be cut along the real axis $|\xi| \leqslant 1$ and is positive for $\zeta = \xi > 1$; the logarithm function is defined to be that branch which is real for a real, positive argument, with a cut along the negative real axis of the argument. Letting $\zeta \to \xi + i0$, $|\xi| \leqslant 1$, in (9) and comparing this with (6) we have

$$\Gamma(\xi) = \frac{2\alpha}{\pi} \log\{[1 + (1 - \xi^2)^{\frac{1}{2}}]/|\xi|\} + \Gamma_1(\xi) \tag{10a}$$

$$\beta(\xi) = \alpha \operatorname{sgn} \xi + \beta_1(\xi) \quad , \tag{10b}$$

so that the proper logarithmic singularity of $\Gamma = \operatorname{Re} \omega = \log(U/q)$ and the proper jump in flow angle, $\beta(0+) - \beta(0-) = 2\alpha$, are exhibited at $\zeta = 0$. Since the real part of the first term of (9) vanishes for ζ real, $|\xi| > 1$, we have, by (5),

$$\Gamma_1(\xi) = \operatorname{Re}\{\omega_1(\xi + i0)\} = 0 \quad , \qquad |\xi| > 1 \quad . \tag{11}$$

Furthermore, the flow approaches that of the free stream $(q = U, \theta = 0)$ at large distances from the plate; therefore, $\omega \to 0$ as $|\zeta| \to \infty$, by (3), and

$$\omega_1(\zeta) \to 0 \quad , \qquad \text{as} \qquad |\zeta| \to \infty \quad , \tag{12}$$

by (9). Finally, Γ_1 in (10a) must be chosen so that inequality (7) is satisfied and (8) and (10a) imply

$$\Gamma_1(\pm 1) = 0 \quad . \tag{13}$$

The function ω_1 may be determined for a given plate shape, however, because the solution involves complicated nonlinear functional equations, it is easier to deal with the so-called "inverse problem", in which the plate shape is determined by giving either $\Gamma_1(\xi)$ or $\beta_1(\xi)$. This information, together with (11) and (12), determines ω_1 uniquely. We now suppose that $\Gamma_1 = \mathrm{Re}\,\omega_1$ is given which satisfies (13) and is Hölder continuous† on $|\xi| \leqslant 1$. The Dirichlet problem for the determination of ω_1,

$$\mathrm{Re}\{\omega_1(\xi+i0)\} = \begin{cases} \Gamma_1(\xi) & \text{for} \quad |\xi| \leqslant 1 \\ 0 & \text{for} \quad |\xi| > 1 \end{cases} , \tag{14}$$

together with (12), has the solution

$$\omega_1(\zeta) = -\frac{i}{\pi}\int_{-1}^{1} \frac{\Gamma_1(t)dt}{t-\zeta} , \tag{15}$$

which may be verified by letting $\zeta \to \xi + i0(|\xi| \leqslant 1)$ in (15) and using Plemelj's formula (e.g., see Muskhelishvili (1953), §17). The imaginary part of ω_1 on S'OS is found to be

$$\beta_1(\xi) = -\frac{1}{\pi}\oint_{-1}^{1} \frac{\Gamma_1(t)dt}{t-\xi} , \qquad |\xi| \leqslant 1 , \tag{16}$$

where $\oint$ denotes the Cauchy principal value. Hölder continuity of β_1 follows from the assumptions which have been made on Γ_1. (Note that if Γ_1 does not satisfy (13), but approaches a nonzero value at an endpoint, then β_1, as given by (16), will have a logarithmic singularity at that endpoint.) If, instead of Γ_1, β_1 is given, the solution for ω_1 involves a Riemann-Hilbert problem; however, this solution will be omitted since it will not be needed.

By (2) and (3), the physical plane is obtained by integrating

$$dz = \frac{1}{U} e^{\omega} df = Ae^{\omega(\zeta)}\zeta \, d\zeta . \tag{17}$$

† $\Gamma_1(\xi)$ is said to be Hölder continuous on $[-1,1]$ if, for any two points $\xi_1, \xi_2 \in [-1,1]$, $|\Gamma_1(\xi_1) - \Gamma_1(\xi_2)| \leqslant B|\xi_1 - \xi_2|^{\mu}$, with $B > 0$ and $0 < \mu \leqslant 1$.

Thus, the plate shape is given parametrically by

$$z(\xi) = x(\xi) + iy(\xi) = A\int_0^{\xi} e^{\omega(\zeta)}\zeta\, d\zeta \quad , \qquad |\xi| \leqslant c \quad ,$$

and, since the plate is symmetric, the width is given by

$$y_o = \operatorname{Im} A\int_{-c}^{c} e^{\omega(\zeta)}\zeta\, d\zeta \quad . \tag{18}$$

It is convenient for subsequent analysis to convert this expression for the width to an integral from -1 to $+1$. To do this, we first continue $\omega(\zeta)$ into the lower half plane by $\omega(\bar{\zeta}) = -\overline{\omega(\zeta)}$, so that $\omega(\xi \pm i0) = \pm\Gamma(\xi) + i\beta(\xi)$ for $|\xi| \leqslant 1$ and, by (5), $\omega(\xi + i0) = \omega(\xi - i0)$ for $|\xi| > 1$. Next, we consider the function $\zeta e^{\omega(\zeta)}$ which appears in the integrand in (18). This function is uniquely determined by the jump in its value (due to the discontinuity of ω) across the cut $|\xi| \leqslant 1$ and by its expansion for large $|\zeta|$ (see Muskhelishvili (1953), §78). In fact, it can be shown that

$$\zeta e^{\omega(\zeta)} = \frac{1}{\pi i}\int_{-1}^{1} \frac{te^{i\beta(t)}\sinh\Gamma(t)dt}{t-\zeta} + \frac{i}{\pi}\int_{-1}^{1}\Gamma(t)dt + \zeta \quad , \tag{19}$$

in which the first integral exhibits the correct discontinuity across the cut $|\xi| \leqslant 1$ and the last two terms are required by the expansion of the left side of (19) for $|\zeta| \gg 1$ (see Whitney (1969)). In this expansion, we use the integral representation for ω,

$$\omega(\zeta) = -\frac{i}{\pi}\int_{-1}^{1}\frac{\Gamma(t)dt}{t-\zeta} \quad , \tag{20}$$

which is found by exactly the same procedure as that used in determining $\omega_1(\zeta)$ (see (14) and (15)). By substituting (19) into (18), and noting that $\beta(-\xi) = -\beta(\xi)$, we obtain

$$y_o = \frac{A}{\pi}\left[\int_{-1}^{1} t\sinh\Gamma(t)\sin\beta(t)dt + \int_{-1}^{1} t\sinh\Gamma(t)\cos\beta(t)\log\{(c-t)/(c+t)\}dt \right.$$
$$\left. + 2c\int_{-1}^{1}\Gamma(t)dt\right] . \tag{21}$$

An element of plate arc length ds is found from (17), (5), and (6), to be

$$ds = |dz| = \begin{cases} Ae^{\Gamma(\xi)}|\xi|d\xi & \text{for} \quad |\xi| \leqslant 1 \\ A|\xi|d\xi & \text{for} \quad |\xi| > 1 \end{cases} .$$

Thus, the total arc length of the plate is given by

$$s_o = \int_{-c}^{c} ds = A\left[(c^2 - 1) + \int_{-1}^{1} e^{\Gamma(t)}|t|dt\right] . \tag{22}$$

The complex force acting on an element of the plate dz is given by

$$dF = (p - p_c)(-idz) ,$$

or, by (4),(5), (6), and (17),

$$dF = \begin{cases} -\frac{i}{2}\rho U^2 A(1 - e^{-2\Gamma})e^{\Gamma + i\beta}\xi\, d\xi , & |\xi| \leqslant 1 \\ 0 , & |\xi| > 1 \end{cases} .$$

By integrating this expression, we obtain the drag D and lift L acting on the plate as

$$D + iL = \frac{-i}{2}\rho U^2 A \int_{-1}^{1} t(1 - e^{-2\Gamma})e^{\Gamma + i\beta} dt ,$$

so that, again noting the asymmetry of $\beta(\xi)$,

$$D = \rho U^2 A \int_{-1}^{1} t \sinh\Gamma(t)\sin\beta(t)dt , \tag{23}$$

and the lift vanishes, as we should expect for a symmetric shape at zero angle of incidence. An alternate expression for the integral which appears in (23), and also in the expression for the width (21), may be obtained by substituting (20) in the left side of (19) and expanding this equation for large $|\zeta|$. By matching coefficients which multiply like power

of ζ in this expansion, we obtain the identity

$$\int_{-1}^{1} t \sinh \Gamma(t) \sin \beta(t) dt = \frac{1}{2\pi} \left(\int_{-1}^{1} \Gamma(t) dt \right)^2 \tag{24}$$

from the terms multiplying ζ^{-1}.

Since ρ and U are kept constant in the minimization of the drag, it is convenient to give the drag the dimensions of length by setting $D^* = D/\frac{1}{2}\rho U^2$. By (23) and (24) we have

$$D^* = \frac{A}{\pi} \left(\int_{-1}^{1} \Gamma(t) dt \right)^2 . \tag{25}$$

3. Statement of the Minimum Drag Problem

In the previous section we have shown that the problem of minimizing the drag of a symmetric profile of given width and arc length reduces to finding functions $\Gamma_1(\xi)$ and $\beta_1(\xi)$ and constants A, c, and α, so that D^* in (25) is a minimum subject to the constraints (21) and (22), in which y_o and s_o are given fixed quantities. The functions $\Gamma(\xi)$ and $\beta(\xi)$ in (21), (22), and (25), are related to $\Gamma_1(\xi)$, $\beta_1(\xi)$, and the half vertex angle of the plate α by equations (10); furthermore, $\beta_1(\xi)$ is related to $\Gamma_1(\xi)$ by (16) in which Γ_1 satisfies the end conditions (13) and is chosen so that Γ in (10a) is positive. Equivalently, we may state this problem in terms of $\Gamma(\xi), \beta(\xi)$, A, and c, and omit further reference to $\Gamma_1(\xi)$, $\beta_1(\xi)$, and α; however, the discontinuous behavior of Γ and β, as exhibited in (10), should still be remembered. By letting $\zeta \to \xi + i0$ ($|\xi| \leqslant 1$) in (20), we obtain the identity

$$\beta(\xi) = -\frac{1}{\pi} \oint_{-1}^{1} \frac{\Gamma(t)dt}{t - \xi} \equiv -H_\xi[\Gamma(t)] \tag{26}$$

which may also be verified by (10) and (16). In the above, the symbol H_ξ denotes the finite Hilbert transform. Finally, in (21), (22), and (25), the factor A is a real, positive constant and the parameter c, which determines the location of the endpoints of the plate in the ζ-plane, satisfies $1 \leqslant c < \infty$.

This problem is equivalent to that of finding a pair of extremal arcs, $\Gamma(\xi)$ and $\beta(\xi)$, which satisfy (26) and minimize the functional

$$I[\Gamma(\xi),\beta(\xi);\,A,c] = D^* - \lambda_1 S_o - \lambda_2 y_o$$
$$= A\int_{-1}^{1} f(\Gamma(t),\beta(t),t;\,\lambda_1,\lambda_2,c)dt$$
$$+ \frac{A}{\pi}(1-\lambda_2/2\pi)\left(\int_{-1}^{1}\Gamma(t)dt\right)^2 \tag{27a}$$

where, by (21), (22), (24) and (25),

$$f(\Gamma(\xi),\beta(\xi),\xi;\,\lambda_1,\lambda_2,c) = -\lambda_1\left[\frac{1}{2}(c^2-1) + e^{\Gamma(\xi)}|\xi|\right]$$
$$-\frac{\lambda_2}{\pi}\left[\xi\sinh\Gamma(\xi)\cos\beta(\xi)\log\{c-\xi)/(c+\xi)\} + 2c\,\Gamma(\xi)\right] \quad . \tag{27b}$$

In the above, the integral identity (24) has been used in the expression (21) for y_o and λ_1, λ_2 are Lagrange multipliers.

The general variational problem of this type has been investigated earlier in Parts I and II. For the present problem the method of solution will follow the same approach with a few modifications. Let the set $\{\Gamma(\xi),\beta(\xi),A,c\}$ denote the optimal solution and let $\{\tilde{\Gamma}(\xi),\tilde{\beta}(\xi),\tilde{A},\tilde{c}\}$ be an arbitrary neighboring set which also satisfy (21), (22), and (26). The differences $\delta\Gamma(\xi) = \tilde{\Gamma} - \Gamma$, $\delta\beta(\xi) = \tilde{\beta} - \beta$, $\delta A = \tilde{A} - A$, $\delta c = \tilde{c} - c$, form a set of small variations, where by (26),

$$\delta\beta(\xi) = -H_\xi[\delta\Gamma(t)] \quad . \tag{28}$$

The variation of the functional I, about the optimal value, due to the variations $\{\delta\Gamma,\delta\beta,\delta A,\delta c\}$ is given by

$$\Delta I = I[\Gamma+\delta\Gamma,\ \beta+\delta\beta;\ A+\delta A,\ c+\delta c] - I[\Gamma,\beta;A,c] \quad .$$

Expansion of the above expression for small $|\delta\Gamma|$, $|\delta\beta|$, $|\delta A|$, and $|\delta c|$, yields

$$\Delta I = \delta I + \frac{1}{2!}\,\delta^2 I + \frac{1}{3!}\,\delta^3 I + \ldots \quad ,$$

where, by (27), the first variation δI and second variation $\delta^2 I$ are given by

$$\delta I = \delta A\left\{\int f(\Gamma,\beta,t;\,\lambda_1,\lambda_2,c)dt + \frac{1}{\pi}\,(1-\lambda_2/2\pi)J^2\right\}$$

$$+ A\,\delta c\int f_c(\Gamma,\beta,t;\,\lambda_1,\lambda_2,c)dt$$

$$+ A\int\left\{\left[f_\Gamma(\Gamma,\beta,t;\,\lambda_1,\lambda_2,c) + \frac{2}{\pi}\,(1-\lambda_2/2\pi)J\right]\delta\Gamma(t)\right.$$

$$\left. + f_\beta(\Gamma,\beta,t;\,\lambda_1,\lambda_2,c)\delta\beta(t)\right\}dt \tag{29}$$

$$\delta^2 I = 2\delta A\int\left\{\left[f_\Gamma + \frac{2}{\pi}\,(1-\lambda_2/2\pi)J\right]\delta\Gamma + f_\beta\,\delta\beta\right\}dt$$

$$+ 2\delta A\,\delta c\int f_c dt + A(\delta c)^2\int f_{cc}dt$$

$$+ A\int\{f_{\Gamma\Gamma}(\delta\Gamma)^2 + 2f_{\Gamma\beta}\,\delta\Gamma\,\delta\beta + f_{\beta\beta}(\delta\beta)^2\}dt$$

$$+ \frac{2A}{\pi}\,(1-\lambda_2/2\pi)\left(\int\delta\Gamma\,dt\right)^2 \tag{30}$$

In the above, all integrals are from -1 to $+1$, subindices denote partial differentiation, and J is given by

$$J = J[\Gamma(t)] \equiv \int_{-1}^{1}\Gamma(t)dt \quad . \tag{31}$$

For I to be a minimum, we must have $\delta I = 0$ and $\delta^2 I > 0$ for arbitrary $\delta\Gamma(\xi)$, $\delta\beta(\xi)$, δA, and δc. δI vanishes if the terms multiplying δA and δc vanish separately. The first line in (29) is zero if

$$\int_{-1}^{1} f(\Gamma(t),\beta(t),t;\,\lambda_1,\lambda_2,c)dt + \frac{1}{\pi}\,(1-\lambda_2/2\pi)J^2 = 0 \quad , \tag{32a}$$

or, by (27a) and (31),

$$D^* = \lambda_1 s_o + \lambda_2 y_o \quad , \tag{32b}$$

in which the functional forms of D^*, s_o, and y_o are given by (25), (22), and (21), respectively. The second line of (29) is zero if, by (27b),

$$\int f_c(\Gamma(t), \beta(t), t; \lambda_1, \lambda_2, c)dt$$

$$= 2\lambda_1 c - \frac{2\lambda_2}{\pi} \int_{-1}^{1} \left\{ \frac{t^2 \sinh\Gamma(t)\cos\beta(t)}{c^2 - t^2} + \Gamma(t) \right\} dt = 0 \quad . \tag{33}$$

Finally, for the last integral of (29), we substitute (28) for $\delta\beta$ and then change the order of integration, giving

$$\int_{-1}^{1} \left\{ \left[f_\Gamma + \frac{2}{\pi}(1 - \lambda_2/2\pi)J \right] \delta\Gamma(t) + f_\beta \delta\beta(t) \right\} dt$$

$$= \int_{-1}^{1} \left\{ f_\Gamma + \frac{2}{\pi}(1 - \lambda_2/2\pi)J + H_\xi[f_\beta] \right\} \delta\Gamma(t)dt = 0 \quad . \tag{34}$$

Now, since $\delta\Gamma(\xi)$ is arbitrary, we obtain the nonlinear singular integral equation

$$f_\Gamma(\Gamma, \beta, \xi; \lambda_1, \lambda_2, c) + H_\xi[f_\beta(\Gamma, \beta, t; \lambda_1, \lambda_2, c)]$$

$$= -\frac{2}{\pi}(1 - \lambda_2/2\pi) \int \Gamma(t)dt \quad , \tag{35a}$$

where, by (27b)

$$f_\Gamma = -\lambda_1 e^{\Gamma(\xi)}|\xi| - \frac{\lambda_2}{\pi} [\xi \cosh\Gamma(\xi)\cos\beta(\xi)\log\{(c-\xi)/(c+\xi)\} + 2c]$$

$$f_\beta = \frac{\lambda_2}{\pi} \xi \sinh\Gamma(\xi)\sin\beta(\xi)\log\{(c-\xi)/(c+\xi)\} \quad . \tag{35b}$$

This integral equation, which contains λ_1, λ_2, and c, as parameters, is to be solved together with the linear integral equation (26) for the extremal arcs $\Gamma(\xi)$ and $\beta(\xi)$. The Lagrange multipliers λ_1, λ_2 are

determined by equations (32) and (33). The final parameter c is most conveniently determined by the nondimensional ratio s_o/y_o, which, of course, is a known constant. Finally, the optimal drag coefficient (based on plate width) is given by

$$C_D = D/\tfrac{1}{2}\rho U^2 y_o = D^*/y_o \quad . \tag{36}$$

This optimal drag coefficient is a minimum if the second variation $\delta^2 I > 0$, which reduces to

$$\delta^2 I = A(\delta c)^2 \int f_{cc}\,dt + A\int \{f_{\Gamma\Gamma}(\delta\Gamma)^2 + 2f_{\Gamma\beta}\,\delta\Gamma\,\delta\beta + f_{\beta\beta}(\delta\beta)^2\}dt$$

$$+ \frac{2A}{\pi}(1-\lambda_2/2\pi)\left(\int \delta\Gamma\,dt\right)^2 > 0 \quad , \tag{37}$$

by (30), (32a), (33), and (34). Now, the last term in (37) is due to the second variation of

$$\frac{A}{\pi}(1-\lambda_2/2\pi)\left(\int_{-1}^{1}\Gamma(t)dt\right)^2 \quad ,$$

which, by (24), equals the second variation of

$$2A(1-\lambda_2/2\pi)\int_{-1}^{1} t\sinh\Gamma(t)\sin\beta(t)dt \quad ,$$

so that (37) may also be written as

$$A(\delta c)^2\int f_{cc}\,dt + A\int\{g_{\Gamma\Gamma}(\delta\Gamma)^2 + 2g_{\Gamma\beta}\,\delta\Gamma\,\delta\beta + g_{\beta\beta}(\delta\beta)^2\}dt > 0 \quad , \tag{38}$$

where $g \equiv f + 2A(1-\lambda_2/2\pi)\xi\sinh\Gamma(\xi)\sin\beta(\xi)$. Since $A > 0$, this inequality holds if both integrals are positive. The first term is positive when, by (27),

$$\int_{-1}^{1} f_{cc}\,dt = -2\lambda_1 + \frac{2\lambda_2 c}{\pi}\int_{-1}^{1}\frac{t^2\sinh\Gamma(t)\cos\beta(t)dt}{(c^2-t^2)^2} > 0 \quad . \tag{39}$$

In Part I, it was shown that a necessary condition for the second integral

in (38) to be positive is that

$$g_{\Gamma\Gamma} + g_{\beta\beta} = -\lambda_1 e^{\Gamma(\xi)}|\xi| > 0 \quad , \quad \text{for} \quad |\xi| < 1 \quad ,$$

or simply,

$$\lambda_1 < 0 \quad , \tag{40}$$

since Γ is real. Once an optimal solution has been found, conditions (39) and (40) must be checked to determine if the solution is an actual minimum.

The singular integral equation (35) may be reduced to an integral equation with a regular kernel by using the identity

$$\xi \cosh\Gamma(\xi)\cos\beta(\xi) = H_\xi[\, t \sinh\Gamma(t)\sin\beta(t)] + \xi \quad , \tag{41}$$

which follows by averaging the equations which, in turn, are a result of letting $\zeta \to \xi \pm i0(|\xi| \leqslant 1)$ in (19) and noting the limits $\omega(\xi \pm i0) = \pm\Gamma(\xi) + i\beta(\xi)$. The substitution of $\xi \cosh\Gamma \cos\beta$, as given by (41), into (35) yields

$$\lambda_2 \int_{-1}^{1} t \sinh\Gamma(t)\sin\beta(t) K(t,\xi;c)dt - \lambda_1 e^{\Gamma(\xi)}|\xi|$$
$$= \frac{\lambda_2}{\pi}\,(2c + \xi \log\{(c-\xi)/(c+\xi)\} - \frac{2}{\pi}\,(1-\lambda_2/2\pi)\int_{-1}^{1} \Gamma(t)dt \quad , \tag{42a}$$

where

$$K(t,\xi;c) = \frac{1}{\pi^2}\,\log\{(c-t)(c+\xi)/(c+t)(c-\xi)\}/(t-\xi) \quad . \tag{42b}$$

It is now possible to show that if an optimal plate shape exists, it must have a blunt nose; i.e., $\alpha = \pi/2$. To show this, we first note that, by (42), $e^{\Gamma(\xi)}|\xi|$ possesses a regular series expansion about $\xi = 0$ of the form

$$e^{\Gamma(\xi)}|\xi| = c_c + c_1\xi^2 + \ldots \quad , \tag{43}$$

where the explicit forms of $c_o, c_1, \ldots$, etc., are easily found but will be omitted here. On the other hand, from (10a), in which $\Gamma_1(\xi)$ is continuous,

$$e^{\Gamma(\xi)}|\xi| = [\{1+(1-\xi^2)^{\frac{1}{2}}\}/|\xi|]^{2\alpha/\pi}|\xi|e^{\Gamma_1(\xi)}$$

$$= (2)^{2\alpha/\pi}|\xi|^{1-2\alpha/\pi}e^{\Gamma_1(o)} + O(|\xi|^{2(1-\alpha/\pi)})$$

as $|\xi| \to 0$. This expansion agrees with (43) only if $\alpha = \pi/2$.

Since there are no known analytical methods for solving the system of integral equations, (26), (42), our only recourse is in solution by numerical methods. These attempts have also failed; however, in order to illustrate some of the many difficulties which beset such procedures, we briefly mention one of the schemes that has been tried. First, the integrals in (26), (32), (33), and (42), are approximated by numerical quadratures which involve the values of $\Gamma(\xi)$ and $\beta(\xi)$ at N points $\{\xi_i\}$ from -1 to +1. An initial guess of $\{\Gamma(\xi_i)\}$ is made and the set $\{\beta(\xi_i)\}$ is then given by (26). Next, the Lagrange multipliers, λ_1, λ_2, are found from (32) and (33), in which the current values of Γ and β are used. Finally, new values of $\{\Gamma(\xi_1)\}$ are calculated by solving for $\Gamma(\xi)$ in (42) and the process is repeated, hopefully, until the iteration converge. These calculations are done for arbitrary values of $c \geqslant 1$, with different c's corresponding to different ratios s_o/y_o.

As mentioned above, this method and many others like it do not work. Among the more disagreeable features that are encountered are the following: (i) the iterations do not always converge; (ii) the values of $\Gamma(\xi_i)$, as given by the solution of (42) for $\Gamma(\xi)$, are not always positive, so that (7) is violated; and, (iii) the value of Γ at $\xi = \pm 1$ is not zero; so that β in (26) becomes large as $\xi \to \pm 1$ and integration of terms involving $\sin\beta$ and $\cos\beta$ by numerical quadrature fails. Corrective steps were taken, such as enforcing $\Gamma(\pm 1) = 0$ at each iteration step, and increasing N; however, these measures did not help.

Note that $\beta(\xi)$ in (26) has a logarithmic singularity at $\xi = \pm 1$ if $\Gamma(\pm 1) = \text{const} \neq 0$, and β has a higher order (branch type) singularity if Γ itself is singular at the endpoints (e.g., see Muskhelishvili (1953), §29). By studying the linear case, in which the functionals are quadratic in Γ and β (see Parts I and II), it was deduced that the endpoint

condition (7) cannot, in general, be satisfied. If this conclusion is also true for the present nonlinear case, it is likely that a solution to (26) and (42) will have no direct physical relevance since Γ and β will be singular at $\xi = \pm 1$; nevertheless, such a solution (if one exists) would provide an absolute lower bound for the drag which could then be used in judging the "degree of optimality" of results obtained by other (approximate) methods, such as that to be presented in the next section.

5. Solution by Expansions in Finite Fourier Series

We now investigate a method for obtaining approximate optimal solutions by the expansion of $\Gamma_1(\xi)$ and $\beta_1(\xi)$ in Fourier series in which the constant coefficients are chosen so that the drag is minimized, subject to the isoperimetric constraints mentioned previously. Let the expansion for Γ_1 be given by

$$\Gamma_1(\xi) = -\sum_{n=1}^{N} a_n \sin(2n-1)\theta \quad , \tag{44}$$

where $\xi = \cos\theta$ ($0 \leqslant \theta \leqslant \pi$. This θ is not to be confused with the flow angle). From the identity

$$\oint_0^{\pi} \frac{\sin m\varphi \, \sin\varphi \, d\varphi}{\cos\varphi - \cos\theta} = -\pi \cos m\theta \quad ,$$

we see that (16) is satisfied, term by term, if

$$\beta_1(\xi) = -\sum_{n=1}^{N} a_n \cos(2n-1)\theta \quad . \tag{45}$$

Note that Γ_1 in (44) and β_1 in (45) have the correct symmetry properties and that (13) is automatically satisfied. By setting $\alpha = \pi/2$ in (9) (this is dictated by the results of the previous section) we obtain

$$\omega(\zeta) = \log\{[(\zeta^2 - 1)^{\frac{1}{2}} + i]/\zeta\} + \omega_1(\zeta) \quad .$$

Therefore, by (17), the width of the plate is given by

$$y_o = -2A \operatorname{Im} \int_o^{-c} e^{\omega_1(\zeta)} [(\zeta^2 - 1)^{\frac{1}{2}} + i] d\zeta \quad . \tag{46}$$

This integral is most easily evaluated by the change of variables

$$\zeta = (\nu + \nu^{-1})/2 \quad , \tag{47}$$

which maps the upper half ζ-plane into the half circle, $|\nu| \leqslant 1$, $\operatorname{Im} \nu \geqslant 0$ (see Figs. 4 and 5). The inverse transform $\nu = -\zeta + (\zeta^2 - 1)^{\frac{1}{2}}$ is chosen so that the point at infinity in the ζ-plane maps to $\nu = 0$; the endpoints of the plate, $\zeta = \pm c$, maps to $\nu = \mp \kappa$, where

$$\kappa = c - (c^2 - 1)^{\frac{1}{2}} \quad . \tag{48}$$

It is readily verified that ω_1 as a function of ν is given by

$$\omega_1(\nu) = i \sum_{n=1}^{N} a_n \nu^{2n-1} \equiv i\Omega(\nu) \quad , \tag{49}$$

since on S'OS, $\nu = -e^{-i\theta}$, where $0 \leqslant \theta \leqslant \pi$; thus, the real and imaginary parts of (49) agree with (44) and (45), respectively. From (47), (48), and (49), the expression for the width becomes

$$y_o = \frac{A}{2} \operatorname{Im} \int_i^{\kappa} e^{i\Omega(\nu)} (\nu + 2i - 2\nu^{-1} - 2i\nu^{-2} + \nu^{-3}) d\nu \quad ,$$

which is evaluated by taking the path of integration L_ϵ in Fig. 5 In the limit $\epsilon \to 0$, it can be shown (see Whitney (1969)) that

$$\begin{aligned} y_o = \frac{A}{2} \Bigg[& \frac{1}{2} \int_o^{\kappa} \sin\Omega(t) [2t - \{2 - \Omega'(t)\}^2 / t] dt \\ & + \int_o^{\kappa} \cos\Omega(t) [2 + \Omega''(t)/2t] dt + \frac{\pi}{2} (2 - a_1)^2 \\ & + [2/\kappa - \Omega'(\kappa)/2\kappa] \cos\Omega(\kappa) - (1/2\kappa^2) \sin\Omega(\kappa) \Bigg] \quad , \end{aligned} \tag{50}$$

where $\Omega'(t) = d\Omega/dt$, $\Omega''(t) = d^2\Omega/dt^2$. By (10a), (44), and (48), the expression for the arc length (22) becomes

$$s_o = A\left[\frac{1}{4}(\kappa + \kappa^{-1})^2 - 1 + \int_o^{\pi} \exp\left\{-\sum_{n=1}^{N} a_n \sin(2n-1)\theta\right\}(1+\sin\theta)\sin\theta\, d\theta\right] . \tag{51}$$

Finally, from (10a), (25), and (44), the drag is found to depend only on the first of the Fourier coefficients,

$$D^* = \frac{A\pi}{4}(2-a_1)^2 , \tag{52}$$

due to the orthogonality of the set $\{\sin(2n-1)\theta\}$ on $[0,\pi]$.

The optimization problem reduces to minimizing D^* in (52), subject to the constraints (50) and (51), over the (N+2) - dimensional space $(A, \kappa, a_1, a_2, \ldots, a_N)$. For general values of $N > 1$, this problem must be done numerically; however, if $N = 1$ the integrals in (50) and (51) may be evaluated in terms of special functions. Note that by (10b) and (45), $\beta(\xi) = \frac{\pi}{2}\,\mathrm{sgn}\,\xi - a_1\cos\theta$, for the case $N = 1$, so the plate section S'OS is convex or concave when viewed from the approaching flow as a_1 is positive or negative. This section is a flat plate, corresponding to the Lavrentieff profile (see Section 1), if $a_1 \equiv 0$.

With $N = 1$ in (49), $\Omega(t) = a_1 t$, $\Omega'(t) = a_1$, and $\Omega''(t) = 0$, so that (50) becomes

$$\begin{aligned} y_o &= \frac{A}{2}\left[\frac{1}{2}\int_o^{\kappa} \sin(a_1 t)\{2t - (2-a_1)^2/t\}dt \right. \\ &\quad + 2\int_o^{\kappa} \cos(a_1 t)dt + \frac{\pi}{2}(2-a_1)^2 \\ &\quad \left. + (2/\kappa - a_1/2\kappa)\cos(a_1\kappa) - (1/2\kappa^2)\sin(a_1\kappa)\right] \\ &= \frac{A}{4}\left[(2a_1^{-2} + 4a_1^{-1} - \kappa^{-2})\sin(a_1\kappa)\right. \\ &\quad + (4\kappa^{-1} - a_1\kappa^{-1} - 2\kappa a_1^{-1})\cos(a_1\kappa) \\ &\quad \left. + (2-a_1)^2\{\pi/2 - \mathrm{Si}(a_1\kappa)\}\right] , \end{aligned} \tag{53}$$

where Si is the sine integral,

$$\mathrm{Si}(x) = \int_0^x \frac{\sin t\, dt}{t} \quad .$$

From (51), the arc length is given by

$$s_o = A\left[\frac{1}{4}(\kappa+\kappa^{-1})^2 - 1 + \int_0^\pi e^{-a_1 \sin\theta}(1+\sin\theta)\sin\theta\cdot d\theta\right]$$

$$= \frac{A}{4}\left[\kappa^2+\kappa^{-2} + 6 + 4\pi(1+a_1^{-1})\{L_1(a_1) - I_1(a_1)\}\right. \tag{54}$$

$$\left. - 4\pi\{L_o(a_1) - I_o(a_1)\}\right] \quad ,$$

where L_i and I_i are the modified Struve and Bessel functions, respectively (e.g., see Abramowitz and Stegun (1964)).

The problem of finding the optimal plate shape from the class of plates with $N = 1$ in (44), (45) is equivalent to extremizing

$$I(A,\kappa,a_1) = D^*(A,a_1) - \lambda_1 s_o(A,\kappa,a_1)$$

$$- \lambda_2 y_o(A,\kappa,a_1) \quad ,$$

where, as before, λ_1 and λ_2 are unknown Lagrange multipliers and D^*, s_o, and y_o are given by (52), (54), and (53), respectively. If I is extremal; the three partial derivatives I_A, I_κ, and I_{a_1}, must vanish. This gives three relations among the quantities $A, \kappa, a_1, \lambda_1$, and λ_2. By eliminating λ_1 and λ_2 from these three equations we have

$$A^2\Delta(a_1,\kappa) \equiv D^*_A[s_{oa_1} y_{o\kappa} - s_{o\kappa} y_{oa_1}]$$

$$- D^*_{a_1}[s_{oA} y_{o\kappa} - s_{o\kappa} y_{oA}] = 0 \quad , \tag{55}$$

where the partial derivatives may be found from (52), (53), and (54). Since $A > 0$, we must have $\Delta(a_1,\kappa) = 0$. Let the solution of this equation be given by $a_1 = f(\kappa)$. For $\kappa \sim 1 (c \sim 1)$ it can be shown, by rather long and tedious expansions of (52), (53), (54), and (55), that

$$a_1 = f(\kappa) = \{8/(3\pi+16)\}(1-\kappa)^2 - \{24\pi/(3\pi+16)^2\}(1-\kappa)^3 + O(1-\kappa)^4 \quad . \tag{56}$$

The general solution, plotted in Fig. 6, is found by fixing κ at various values between 0 and 1 and numerically solving for a_1 from $\Delta(a_1,\kappa) = 0$ in (55). As $\kappa \to 0$ $(c \to \infty)$, a_1 is found to be the root of the transcendental equation

$$(2+a_1)a_1\{L_o(a_1) - I_o(a_1)\} - (a_1^2+2a_1+4)\{L_1(a_1) - I_1(a_1)\}$$
$$= \frac{1}{\pi}(3-2a_1)a_1^2/(2-a_1) \quad .$$

This root is given by $a_1 \sim 0.1020$, which provides an upper bound for a_1, so that the optimal shapes are only slightly curved over S'OS.

This one relation, $a_1 = f(\kappa)$, is all that is needed to complete the solution since the factor A drops out of the expressions for the drag coefficient and the ratio of arc length to chord. Thus, by (36),

$$C_D = C_D(a_1,\kappa) = D^*/y_o \quad , \tag{57}$$

and, denoting the ratio of arc length to chord by k,

$$k = k(a_1,\kappa) = s_o/y_o \quad . \tag{58}$$

The evaluation of (57) and (58) (in which D^*, y_o, and s_o are given by (52), (53), and (54)) for $a_1 = f(\kappa)$ gives a parametric representation of C_D versus k. This is plotted in Fig. 7, where $C_{D_o} = 2\pi/(\pi+4)$ is the drag coefficient of a flat plate in infinity cavity flow (e.g., see Lamb(1932)). As $k \to \infty$, it can be shown from (57) and (58) that $C_D \sim (4+\pi)/(\pi+8k)$.

Minimum drag profiles for various values of k are shown in Fig. 8. These profiles are found by numerically integrating dz in (17) and are quite similar to Lavrentieff's profiles discussed earlier in Section 1; however, by expanding y_o in (53) and s_o in (54) for small a_1, it can be shown that for $(k-1) \ll 1$,

$$C_D = \frac{2\pi}{4+\pi}\{1 - \gamma(k-1)^{\frac{1}{2}} + O(k-1)\} \quad ,$$

where

$$\gamma = 4\{2(\pi+4)\}^{-\frac{1}{2}} \sim 1.0584$$

for the Lavrentieff profiles $(a_1 = 0)$, and

$$\gamma = 4\{(9\pi+64)/4(\pi+4)(3\pi+16)\}^{\frac{1}{2}} \sim 1.1641$$

for the profiles in Fig. 7. Thus, for k close to unity, the drag coefficients of the profiles in Fig. 7 are slightly less than those for Lavrentieff's profiles.

The cases $N = 2, 3, \ldots,$ could, in principles, be carried out along similar lines and should result in improved drag coefficients for a given $k = s_o/y_o$. The numerical examples of Part I, in which the exact solutions to the variational problem are known, indicate that expansion in Fourier series is a very effective method, at least for the case of quadratic functionals. Whether the same holds true for the present problem, in which the functional is of a different type, remains to be seen.

Acknowledgment

This paper is based on part of the author's doctoral research which was supported by the National Science Foundation and carried out at the California Institute of Technology under Professor T. Y. Wu, whose interest and encouragement is gratefully acknowledged. The present work was sponsored by the Naval Ship System Command General Hydrodynamics Research and Development Center and the Office of Naval Research, under contract Nonr-220(51).

References

Abramowitz, M. and Stegun, I. 1964 Handbook of Mathematical Functions. National Bureau of Standards.

Gilbarg, D. 1960 Jets and Cavities. Handbook der Physik, Vol. IX. Berlin: Springer-Verlag.

Lamb, H. 1932 Hydrodynamics (6th edn.) Cambridge University Press.

Lavrentieff, M. 1938 Sur certaines properiétés des fonctions univalentes et leurs applications à la théories des sillages. Mat. Sbornik 46, 391.

Muskhelishvili, N. 1953 Singular Integral Equations. Groningen, Holland: Nordhoff.

Whitney, A. 1969 Minimum drag profiles in infinite cavity flows. Ph. D. Thesis, Calif. Inst. of Tech., Pasadena, Calif.

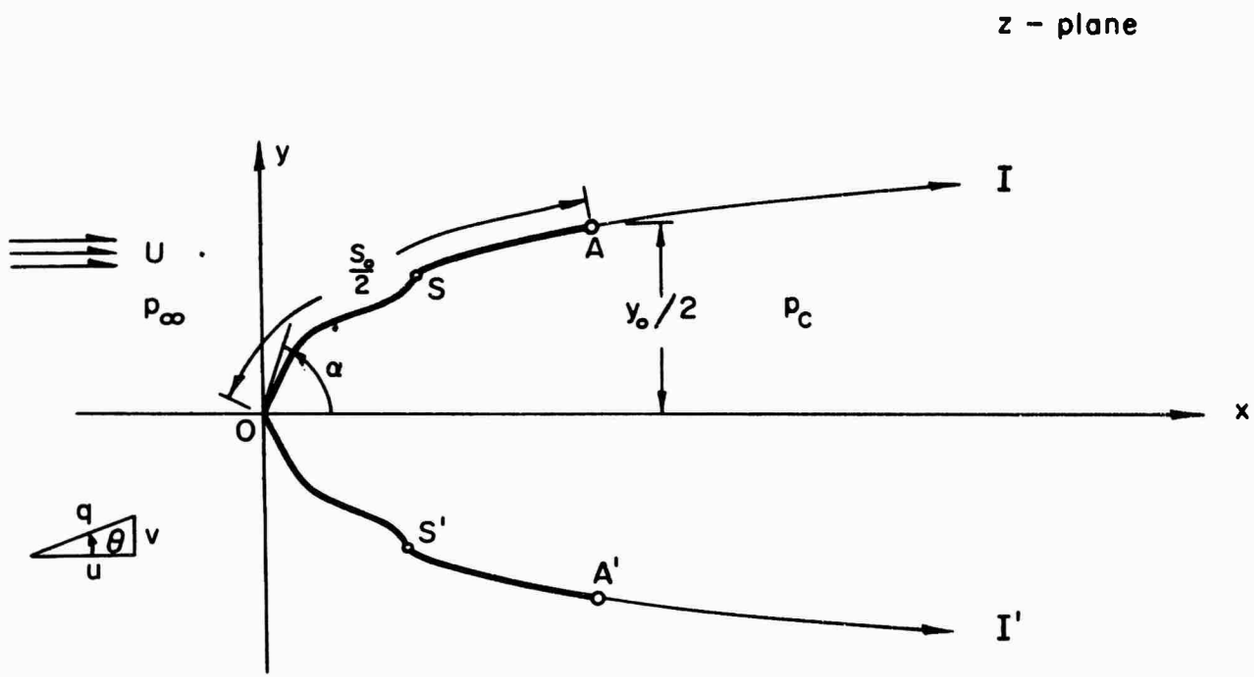

Fig. 1 The physical plane.

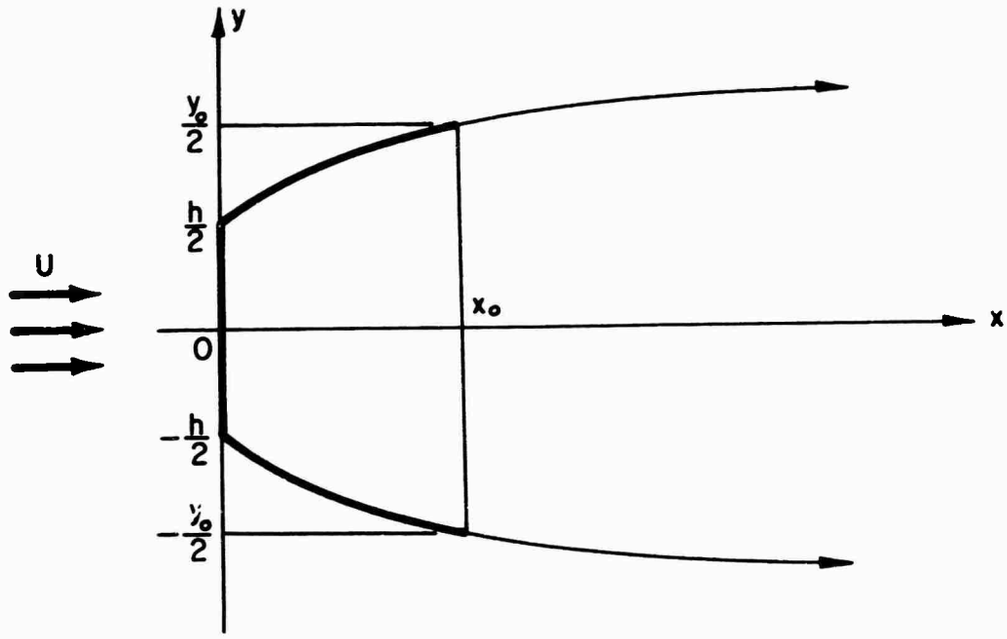

Fig. 2 The Lavrentieff profile.

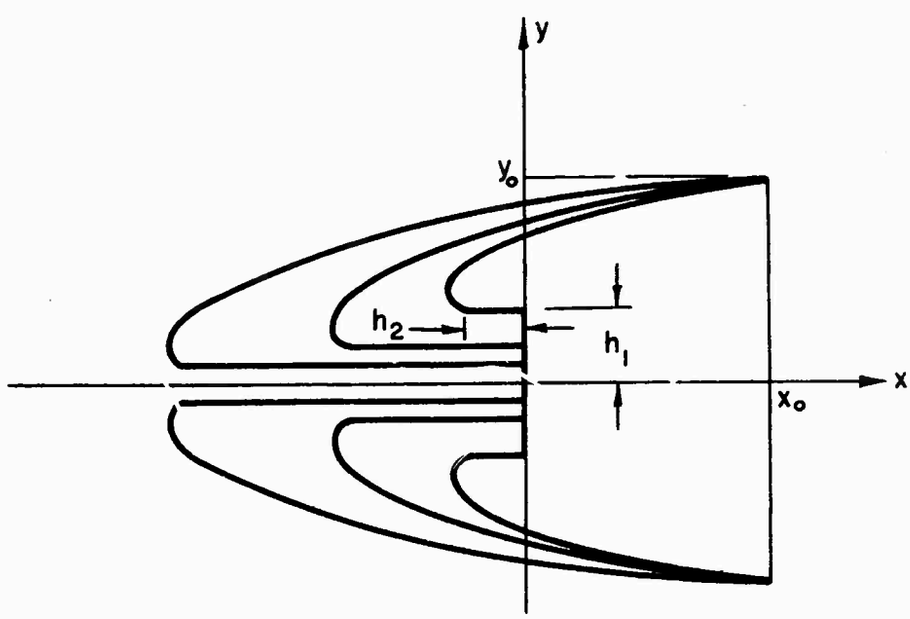

Fig. 3 A sequence of plate shapes with vanishing drag

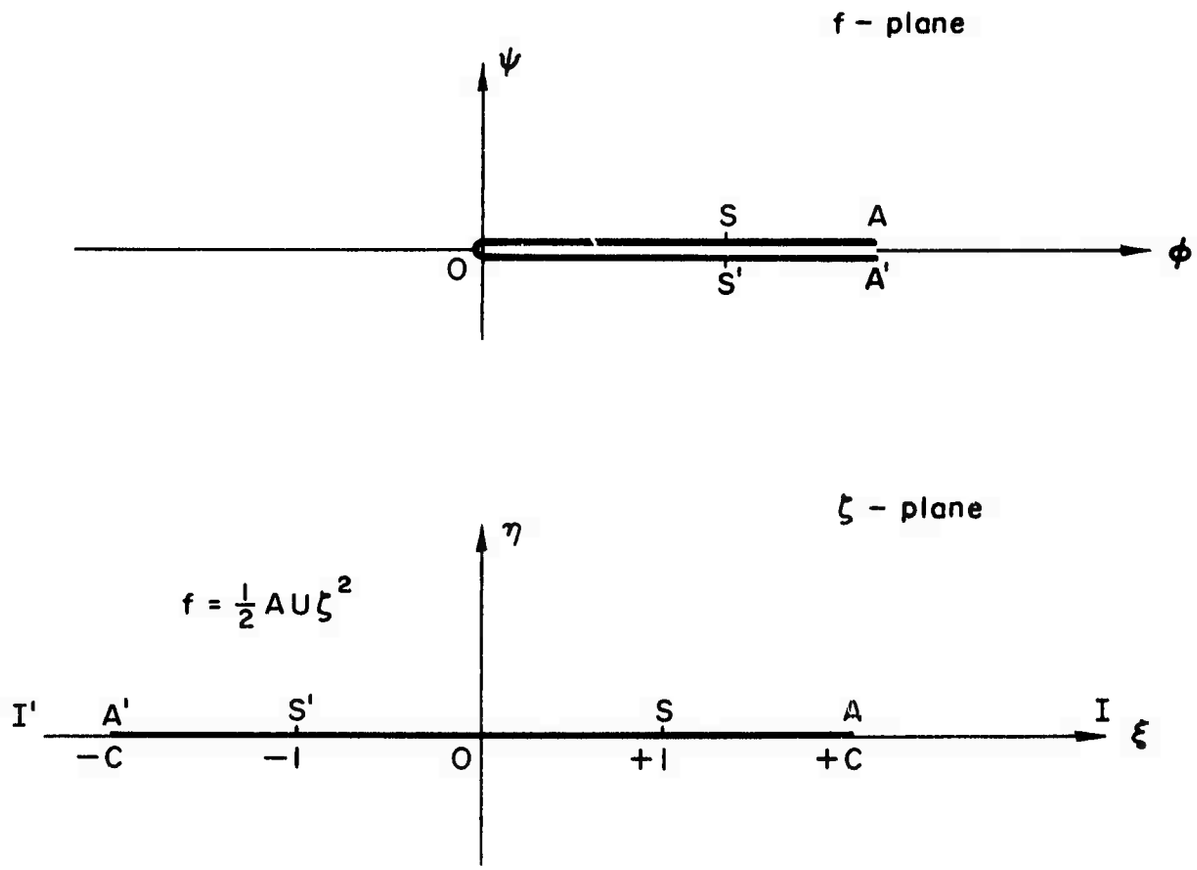

Fig. 4 Transformation from complex potential plane to ζ-plane.

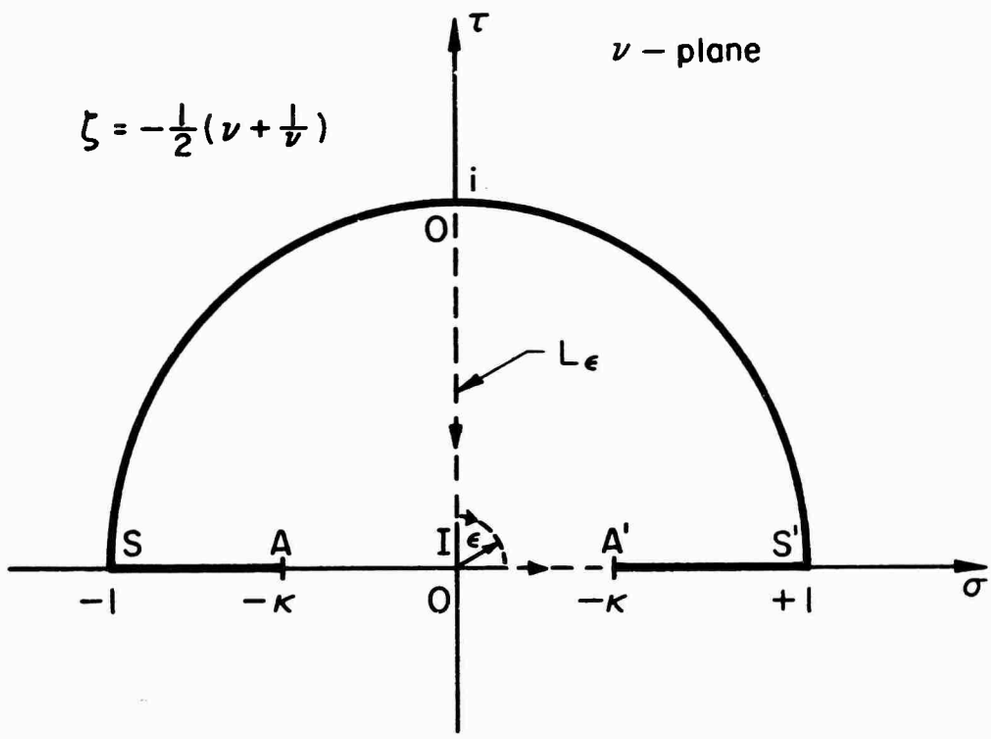

Fig. 5 The path of integration in the ν-plane

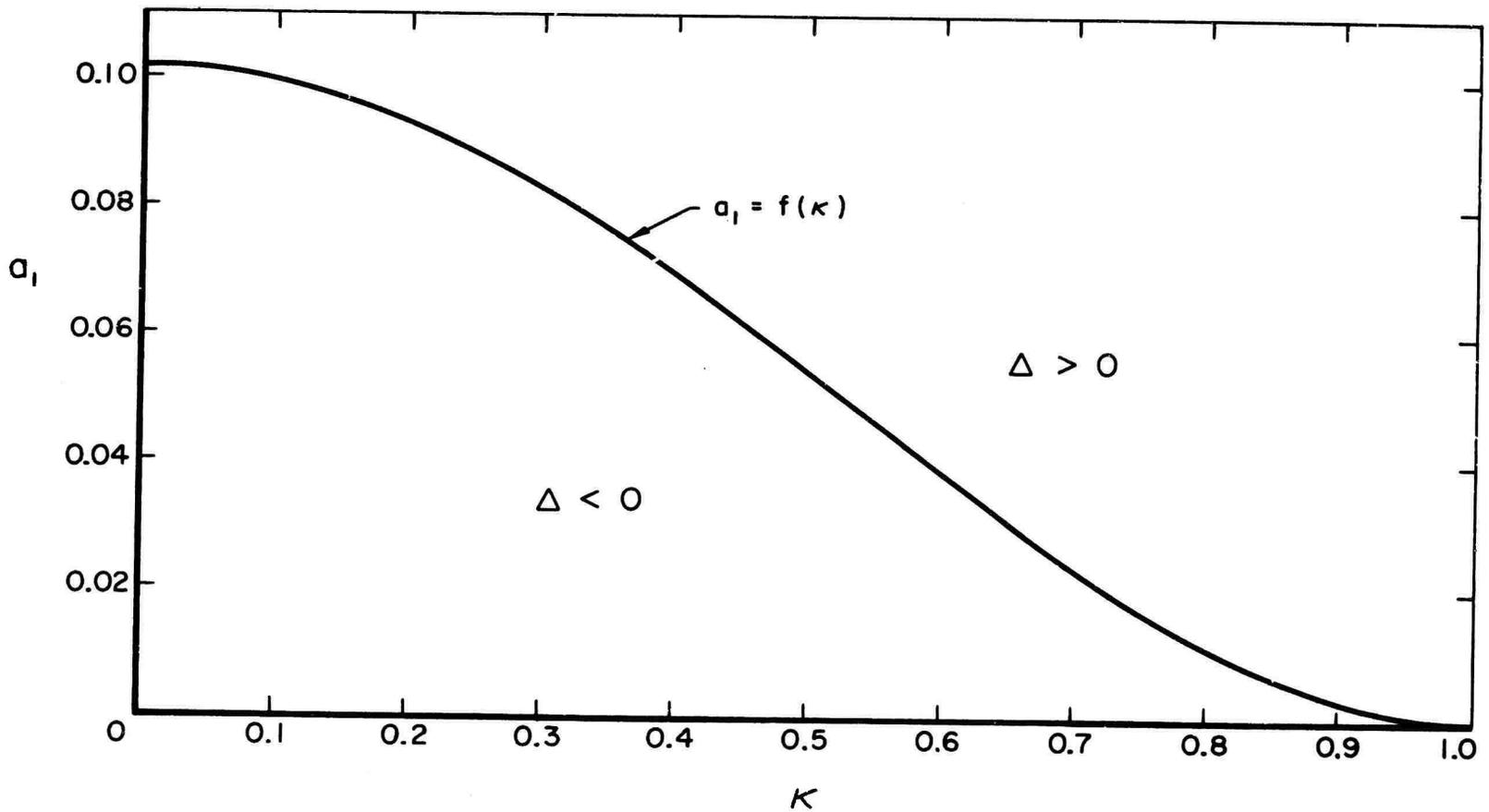

Fig. 6 The curve $a_1 = f(\kappa)$ on which $\Delta(a_1, \kappa) = 0$

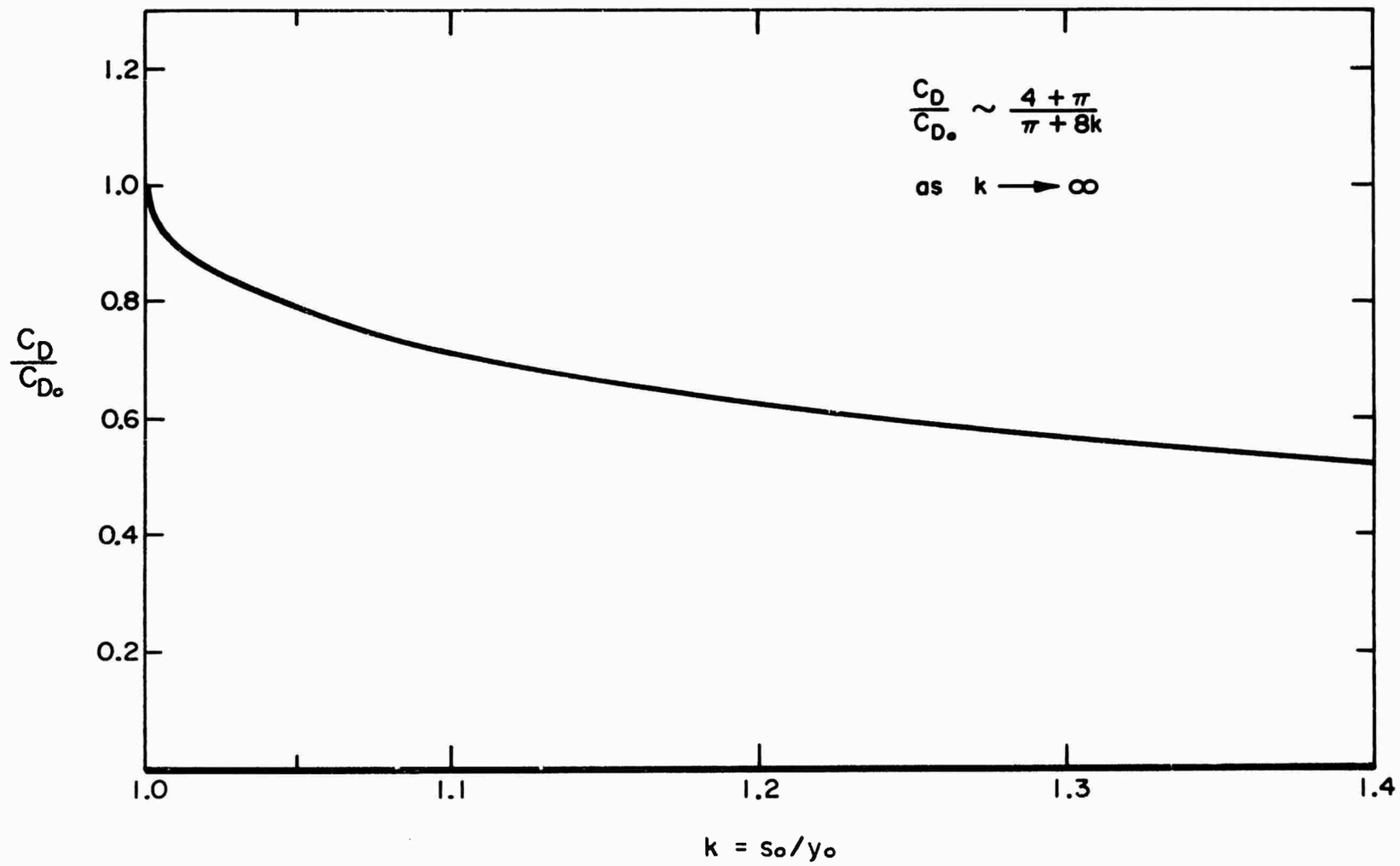

Fig. 7 Minimum drag coefficient versus k.

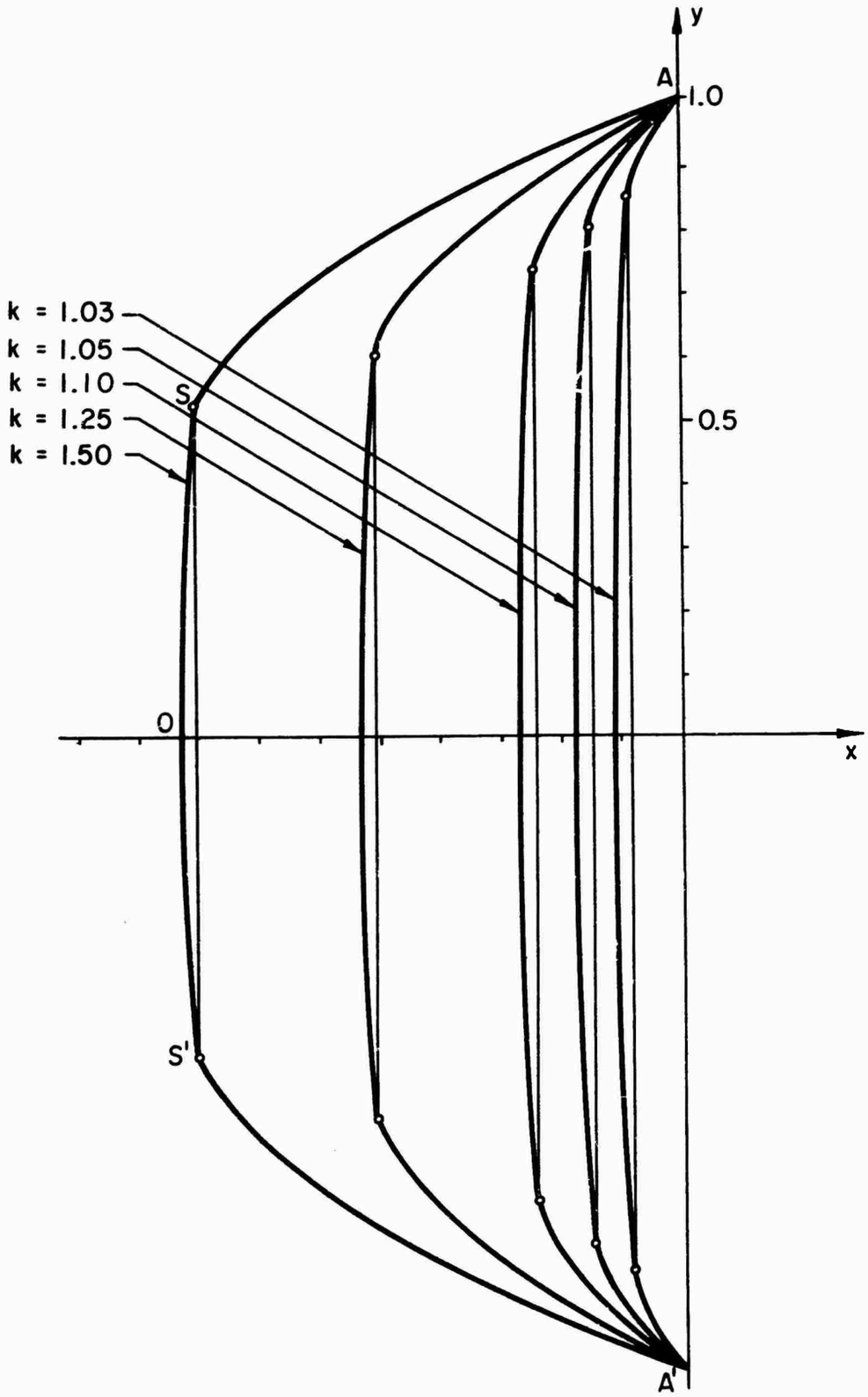

Fig. 8 Optimum plate profiles for the Case N = 1.