AFOSR TR 71-2419

AD 729969

TILTMETER INSTRUMENTATION FOR DEEP HOLE OPERATION ANNUAL TECHNICAL REPORT

prepared for

AIR FORCE OFFICE OF SCIENTIFIC RESEARCH

ARLINGTON, VIRGINIA

sponsored by

ADVANCED RESEARCH PROJECT AGENCY

ARPA ORDER NO. 1584

Reproduced by
NATIONAL TECHNICAL
INFORMATION SERVICE
Springfield, Va. 22151

D D C
RECEIVED
SEP 24 1971
C

Approved for public release;
distribution unlimited.

Arthur D. Little, Inc.

50

UNCLASSIFIED
Security Classification

DOCUMENT CONTROL DATA - R & D

(Security classification of title, body of abstract and indexing annotation must be entered when the overall report is classified)

1. ORIGINATING ACTIVITY (Corporate author)
Arthur D. Little, Inc.
15 Acorn Park
Cambridge, Massachusetts 02140

2a. REPORT SECURITY CLASSIFICATION
UNCLASSIFIED

2b. GROUP

3. REPORT TITLE
DEVELOPMENT OF DEEP HOLE INSTRUMENTATION

4. DESCRIPTIVE NOTES (Type of report and inclusive dates)
Scientific..... Interim

5. AUTHOR(S) (First name, middle initial, last name)
Ivan Simon, Martin L. Cohen, Robert E. Elcox, C. Russell Smallman, Robert Lucas, and Joseph B. Walsh

6. REPORT DATE
14June 1971

7a. TOTAL NO. OF PAGES
41

7b. NO. OF REFS
9

8a. CONTRACT OR GRANT NO.
F44620-70-C-0074

b. PROJECT NO.
AO 1584

c. 62701D

d.

9a. ORIGINATOR'S REPORT NUMBER(S)

9b. OTHER REPORT NO(S) (Any other numbers that may be assigned this report)
AFOSR - TR - 71 - 2419

10. DISTRIBUTION STATEMENT
Approved for public release; distribution unlimited

11. SUPPLEMENTARY NOTES
TECH, OTHER

12. SPONSORING MILITARY ACTIVITY
Air Force Office of Scientific Research
1400 Wilson Boulevard (NPG)
Arlington, Virginia 22209

13. ABSTRACT

A deep-hole tiltmeter system was developed and constructed for the purpose of measuring and recording two components of tilt resulting from changes in earth strain associated with tectonic processes or geotechnical operations such as fluid injection. The downhole unit is designed so as to permit continuous operation in wells up to 3000 m (9200 ft) deep at temperatures as high as 120°C and fluid pressures up to 5000 psi. The drift diameter of the smallest well casing in which the downhole unit can be placed is 5.55 in. The instrument is lowered in the well by a 7-conductor, double-armored cable and firmly attached to the well casing at the specified depth by a remotely operated holelock. The instrument can be retrieved using the same cable. The electronics system allows selective execution of commands for several (presently seven) different functions of the downhole unit. The output data are time-multiplexed (up to 14 channels) and sequentially recorded by a digital printer. The tilt range of the downhole unit is nominally ±100 microradians (± 20 arc sec) and the sensitivity of the tilt sensors is approximately 150 to 200 μrad/volt. With the resolution of the A/D converter presently used tilt changes smaller than 0.1 μrad (10^{-7} rad) can be resolved. The prototype system passed laboratory tests and is presently being made ready for tests in a 100 ft. borehole.

DD FORM 1 NOV 65 1473

UNCLASSIFIED
Security Classification

ANNUAL TECHNICAL REPORT

15 June 1970 through 14 June 1971

TILTMETER INSTRUMENTATION FOR DEEP HOLE OPERATION

Sponsored by

Advanced Research Project Agency

ARPA Order No. 1584

C-72720

Approved for public release;
distribution unlimited.

Arthur D. Little, Inc.

IDENTIFICATION

Project Title:	Tiltmeter Instrumentation for Deep Hole Operation
ARPA Order No.:	1584
Program Code No.:	0F10
Name of Contractor:	Arthur D. Little, Inc.
Effective Date of Contract:	15 June 1970
Contract Expiration Date:	14 June 1971
Amount of Contract:	$196,408
Contract No.:	F44620-70-C-0074
Principal Investigator:	Ivan Simon
Telephone No.:	(617) 864-5770

Table of Contents

		Page
I.	SUMMARY	1
II.	INTRODUCTION	2
III.	DESIGN PHILOSOPHY AND INSTRUMENT SPECIFICATIONS	4
IV.	MECHANICAL DESIGN	13
	A. Holelock	13
	B. Seals	13
	C. Tiltmeter Casings	14
V.	INSTRUMENTATION	15
	A. Tiltmeters	15
	B. Electronics	20
VI.	TESTS	28
	A. Calibration and Stability Tests of Tiltmeters	28
	B. Ring Seal Pressure Tests	32
VII.	APPENDIX	34
VIII.	REFERENCES	41
	DD FORM 1473	

List of Figures

Figure No.		Page
1	Schematic Diagram of the Deep Hole Biaxial Tiltmeter (not to scale)	7
2	Assembly Drawing of the Downhole Unit	8
3	Assembly Drawing of the Holelock and Tiltmeter Section	9
4	Detail Drawing of Pressure Casing, Tiltmeter Section	10
5	Detail Drawing of Pressure Casing, Electronic Section	11
6	Schematic Drawing of Tiltmeter Assembly with Leveling Motors	16
7	View of the Complete Tiltmeter Assembly	17
8	Definition of Components of Tilt in the System of Coordinates Having Origin at Earth's Surface	19
9	Block Diagram of Tiltmeter Control and Data Acquisition Electronics	21
10	Identification of Control Switches on Control Panel	23
11	View of the Control and Data Acquisition Panel	24
12	Front View of the Downhole Electronics Package	26
13	Back View of the Downhole Electronics Package	27
14	Calibration Curves of the Y-Tiltmeter at 25° and 120°C	29
15	Calibration Curves of the Y-Tiltmeter at 25° and 120°C	30
16	Frequency Response Curves (amplitude) of the X and Y Tiltmeters	31
17	Vertical Displacements for Four Sources of Strain 1. line source, 2. Mogi's two-point source, 3. point source, 4. circular crack source (Sun)	40

I. SUMMARY

A deep-hole tiltmeter system was developed and constructed for the purpose of measuring and recording two components of tilt resulting from changes in earth strain associated with tectonic processes or geotechnical operations such as fluid injection. The downhole unit is designed so as to permit continuous operation in wells up to 3000 m (9200 ft) deep at temperatures as high as 120°C and fluid pressures up to 5000 psi. The drift diameter of the smallest well casing in which the downhole unit can be placed is 5.55 in. The instrument is lowered in the well by a 7-conductor, double-armored cable and firmly attached to the well casing at the specified depth by a remotely operated holelock. The instrument can be retrieved using the same cable. The electronics system allows selective execution of commands for several (presently seven) different functions of the downhole unit. The output data are time-multiplexed (up to 14 channels) and sequentially recorded by a digital printer. The tilt range of the downhole unit is nominally $\pm$ 100 microradians ($\pm$ 20 arc sec) and the sensitivity of the tilt sensors is approximately 150 to 200 μrad/volt. With the resolution of the A/D converter presently used tilt changes smaller than 0.1 μrad (10^{-7} rad) can be resolved. The prototype system passed laboratory tests and is presently being made ready for tests in a 100 ft. borehole.

E R R A T A

P. 1,	line 5	9840 ft.
P. 4,	line 7	9840 ft.
P.28,	line 21	± 100 arc sec, and beyond ± 200 μrad
P.40,	line 3 of caption to fig 17	delete SUN

II. INTRODUCTION

The purpose of the present program is to develop and construct a deep hole instrumentation for the purpose of measuring and continually recording two components of tilt resulting from changes in earth strain. Such changes may be either of natural, tectonic origin, or, they may result from artificial processes such as deep well fluid injection, oil field production or underground nuclear explosions. It is expected that studies of spatial and temporal distribution of tilt and strain will contribute to the understanding of the nature of seismic phenomena often associated with the processes mantioned above.

Tilt, being a rotation in the vertical plane provides a direct measure of that part of displacement which is characteristic of a ground movement such as inflation, subsidence, slumping or slip on a dipping fault. In a way, measurement of tilt may be considered complementary to the measurement of the linear components of strain. Relations between tilt and strain can be obtained analytically for configurations of simple geometry and under the usual assumptions of elastic uniformity and isotropy of the earth. A classical example is that of a spherical source of strain in semi-infinite medium first solved by Yamakawa (1955). His results have been adapted for the interpretation of tilt observations made at volcanoes in Japan and Hawaii, (Mogi, 1958, Eaton, 1959, Fiske and Kinoshita, 1969). Analytical solutions for deformation fields resulting from sources of other geometries have been obtained more recently: linear source (Walsh and Decker, 1971); planar source (Tryggvasen, 1970) and lenticular sources (Sun 1969). Other configurations can be often treated numerically by the method of finite element analysis.

Inversion of the tilt data measured at earth's surface is not necessarily unique inasmuch as various types of sources often yield fits indistinguishable from each other within the limits of experimental accuracy. The likelihood of obtaining more definite interpretation would be improved if tilts could be measured at various depths and distances. Similarly, in studying the tilt distributions related to tectonic strain buildup and release it would be of advantage to place the tiltmeters close to the depth at which seismic foci are localized in the given area.

Under the proposed program one or more deep hole tiltmeters are to be built and deployed in a geophysical field experiment. Such an experiment was originally planned to take place concurrently with the seismological studies conducted by the U. S. Geological Survey at the water injection site in the Rangely oil field in Colorado (Raleigh and Healy, 1970). The plan was abandoned when it became difficult to obtain permission of the Chevron Oil Company for the release of the necessary oil

wells. Other possible experimental sites have been investigated in Utah, Nevada and California, but no final selection has been made.

At the time the experiment at the Rangely oil field was still under consideration we made theoretical estimates of the range and magnitude of tilt the instruments would be required to handle. The details of the calculations are given in the Appendix; the results may be briefly summarized as follows.

Assume that the pressure under which water is injected into the porous formation is changed by 100 bars (∿ 1500 psi); assume further, that this pressure change takes place in a spherical region with diameter equal to the thickness of the formation (230 m or ∿750 ft). The mean depth of the formation is about 6500 ft. or 2000 m, which is taken as the depth of the center of the spherical region subject to the pressure change. Then the tilt on the surface at points of maximum tilt (on a 100 m radius from the borehole) will be about 0.1 microradians (μrad). Maximum tilt increases approximately as the cube of depth to a value of about 400 μrad at the boundary of the spherical region. The tilt is about 50 μrad in a borehole 1000 m deep located such that the tiltmeter measures maximum tilt for that depth. Tilts will increase as the region in which the fluid pressure changes elongates. The maximum tilt at the surface for a lens-shaped region 1600 m long, 2000 m below the surface will be about 20 μrad.

From these and similar estimates we concluded that borehole tiltmeters designed for recording at sites subject to water injection or oil withdrawal should have a range of at least 100 μrad and a resolution better than 0.1 μrad. Requirements for instruments to be used for recording of naturally occurring tectonic tilts might be somewhat different because the changes of tilt tend to be small and proceed at a rather slow rate. The secular rates of tilt change may be estimated for active areas to be of the order of 0.1 to 1.0 μrad per year. However, the tilt rate may accelerate significantly prior to a seismic event (Rikitake, 1968; Wood et al, 1971) and during the actual fault movement it may be extremely rapid. The exact time of occurrence of any particular seismic event cannot, as yet, be predicted and the waiting period may be rather long (months to years). Therefore, the instrumentation for tectonic tilt studies should have drift rate small compared with the tilt rate to be measured. This additional requirement may be more difficult to meet in practice than the requirements of range, sensitivity, and resolution. Therefore, required characteristics of instrumentation outlined in the following section are more of a nature of target values rather than hard specifications.

III. DESIGN PHILOSOPHY AND INSTRUMENT SPECIFICATIONS

Based on the considerations outlined in the preceding section and after discussions with a number of experts we adopted the following set of specifications for the instrumentation to be developed.

Tilt range:	± 100 μrad (±20 arc sec) in both axes
Tilt resolution:	<0.03 μrad (tilt sensors alone)
Tilt stability:	<1 μrad/month
Operating depth:	3000 m (9100 ft.)
Operating pressure:	5000 psi, max.
Operating temperature:	120°C (250°F), maximum
Data transmission:	sequential, up to 14 channels, with digital printout
Remote controls:	instrument-to-casing lock and unlock; internal tiltmeter leveling
Leveling range:	±7.5° off vertical in both axes
Holelock:	Geotech Mod. 24080 (modified)
Instrument cable:	7 conductors, double armored (Monel K500)
Instrument dimensions:	5 in. dia., ∿120 in. long
Material of case:	Monel K500
Azimutal orientation:	by Sperry-Sun gyro device

The required tilt range and resolution were well within the realm of our previous experience with diamagnetic tiltmeters of similar type. The required long term stability of 1 μrad per month, or better, is routinely attained at ambient temperatures (∿25°C) with existing tiltmeters. Preliminary studies of the advanced tilt sensors indicated that similar degree of stability could also be attained at high temperatures.

The maximum operating depth was originally proposed at 2000 m and later increased to 3000 m. The maximum operating pressure (5000 psi) was determined as a hydrostatic pressure corresponding to the given depth, assuming well fluid density as high as 1.1g/cm^3. The maximum operating temperature 120°C) was estimated from standard references on geothermal gradient, taking an average velue of 40°C/km. This is a conservative estimate since the gradients in many wells are considerably lower (∿25°c/km) and in water injected oil fields the mean temperature may be depressed still lower.

The instrument was planned to be used continually for extended periods of time but to be recoverable rather than permanently emplaced (cemented) in one fixed location. Therefore, it was to be provided with a remotely actuated mechanism (holelock) permitting it to be firmly connected to the wall of the borehole at a predetermined depth and released when needed. We chose to use a holelock of a type originally developed for borehole seismometers and slightly modified for the present purpose. The holelock is designed for use in boreholes provided with steel casing which is a common practice in wells in oil fields where the initial application of the instrumentation was to take place.

The size of the instrument was likewise determined in view of the existing oil well practices. The well casings in the Rangely oil field are 7 or 7-5/8 O.D., and sizes between 6 and 7 in. I.D. are common in other fields. The clear (drift) diameter on the heaviest weight 6-5/8 O.D. casing is 5.55 in. Therefore, we decided to design the downhole unit to a maximum diameter of 5.25 in. at the holelock shoulders and 4.88 in. diameter at the body of the downhole unit. The overall length of the instrument became approximately 120 in. which was considered acceptable.

Following the practice of well logging industry the downhole unit was to be both hoisted and electronically operated by a single cable. A seven-conductor cable armored with two layers of steel wire, having an overall diameter of 0.46 in. (Vector Cable Co., type 7-46NT or A-20007) was found to be a standard item, available on custom orders in the required lengths and load capacities.

The small number of conductors in the cable imposed certain limitations on the type of electronics applicable. Ideally, if all control functions, all outputs and the power inputs were to be continually and simultaneously operable, the number of conductors required would be at least 15. Since this was not possible, a sequential system was developed in which control functions were operated one at a time and all output channels were sequentially multiplexed either one at a time or on a continuous, predetermined cycle. In this way up to eight control functions and fourteen data channels could be operated over the seven conductors, including power input for the downhole unit.

While the cable is of a standard construction, its armor can be optionally galvanized steel, stainless steel or Monel wire, depending on the corrosion conditions in service. Corrosion problems in oil wells may be quite serious and have been known to result in loss of equipment under oxidizing conditions, but for protection under acid conditions (CO_2 of H_2S in combination with fatty acids) only Monel appears to be satisfactory.

Consideration of corrosion is also of prime importance for the pressure case of the downhole unit, the holelock and the cable connector receptacle. All these parts should be made of Monel. Monel K 500 was specified for the pressure case, the cable connector and the connector receptacle. The holelock was not available in Monel from the manufacturer as a standard item, however, it could be obtained on special order, at extra cost and with a very long delivery (9 months) The use of Monel K 500 throughout is mandatory for preventing electrolytic corrosion.

Use of Monel K 500 for the downhole unit is recommended not only for its corrosion resistance but also for high strength obtainable by heat treatment. In the heat treated state its yield strength is 100,000 psi, elongation 2 to 25% and Rockwell C hardness 10 to 20. Because of the high strength of Monel it is possible to design the case of the downhole unit for the maximum operating pressure (5000 psi) with reasonably thin walls (3/8 in.). For a given external diameter it is then possible to obtain the maximum inside diameter for the instrumentation.

The overall configuration of the downhole instrument is shown schematically in Figure 1, and in detail in Figures 2, 3, 4 and 5. The instrument consists of three sections: the holelock (H), the tiltmeter (T) and the electronics (E). The internal tiltmeter module is bolted directly to the body of the holelock which, when in use, is pressed against the wall of the borehole at two shoulders (S) and the cam (L). This assures direct transfer of the tilt from the borehole casing to the tiltmeter. The tiltmeter and the electronics modules are contained in a pressure container C_1, C_2. The entire assembly is hoisted in and out of the borehole by the cable and a cable connector bolted to the top of C. The pressure case makes no contact with the internal instrumentation nor with the borehole; thus it transmits no spurious strains or tilts if it is subject to deformation or deflection by any source. The case has only two major pressure seals (P) on its full diameter and one minor seal at the cable connector. The active holelock mechanism is open to the well fluid but there are seals separating the mechanism from the interior cavities. However, we have provided additional separation from the instrumentation by a bulkhead penetrated only by one pressure-sealed cable connector.

The orientation of the complete downhole instrument is obtained at the time of its emplacement by using the Sperry-Sun gyro system. The Sperry-Sun system--available as a service but not as a procurable item--permits establishment of the direction of the axes of the instrument with respect to the geographic North. There are two modes of utilizing the Sperry-Sun system. In one, a packer or plug provided with an index "keyhole" is placed in the borehole at the required depth and its orientation is established by the gyro device. The downhole instrument is provided with a "sting" matching the keyhole and lowered into it. The other alternative is to provide the top of the instrument with a "muleshoe" and lower the gyro device equipped with a matching sting into it

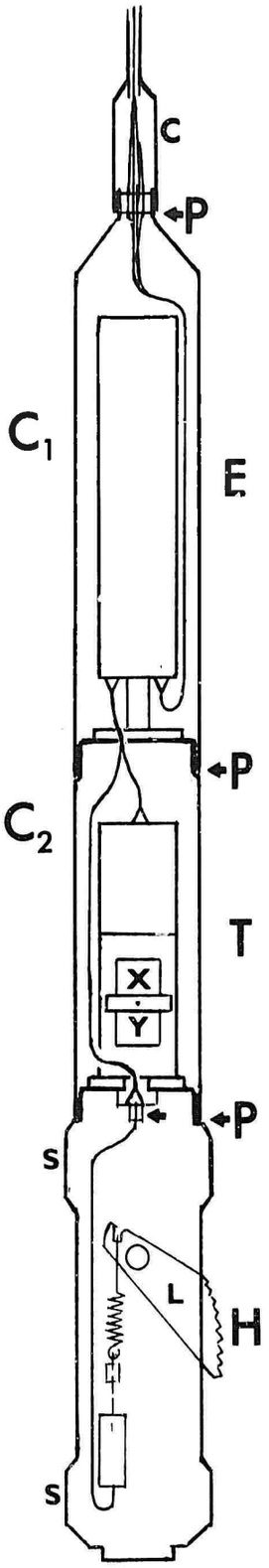

FIGURE 1 SCHEMATIC DIAGRAM OF THE DEEP HOLE BIAXIAL TILTMETER (not to scale)

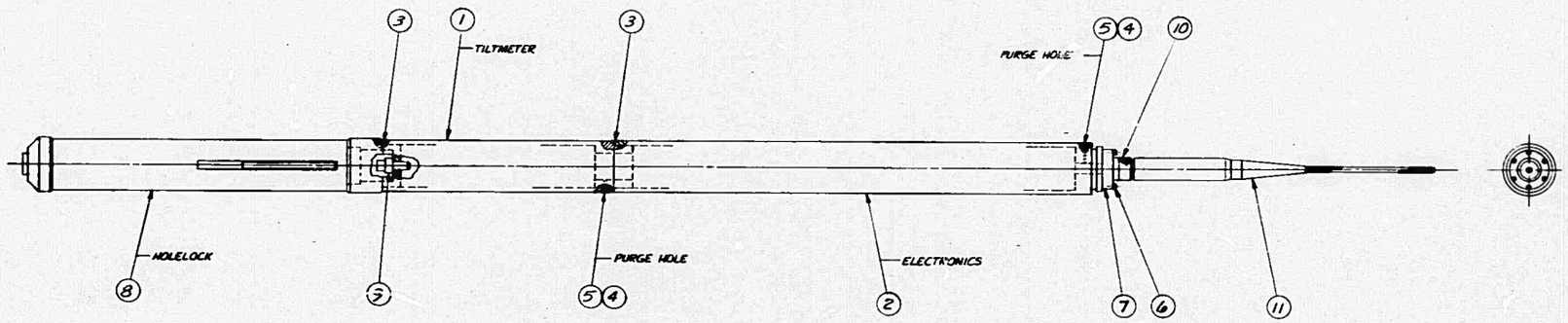

FIGURE 2 ASSEMBLY DRAWING OF THE DOWNHOLE UNIT

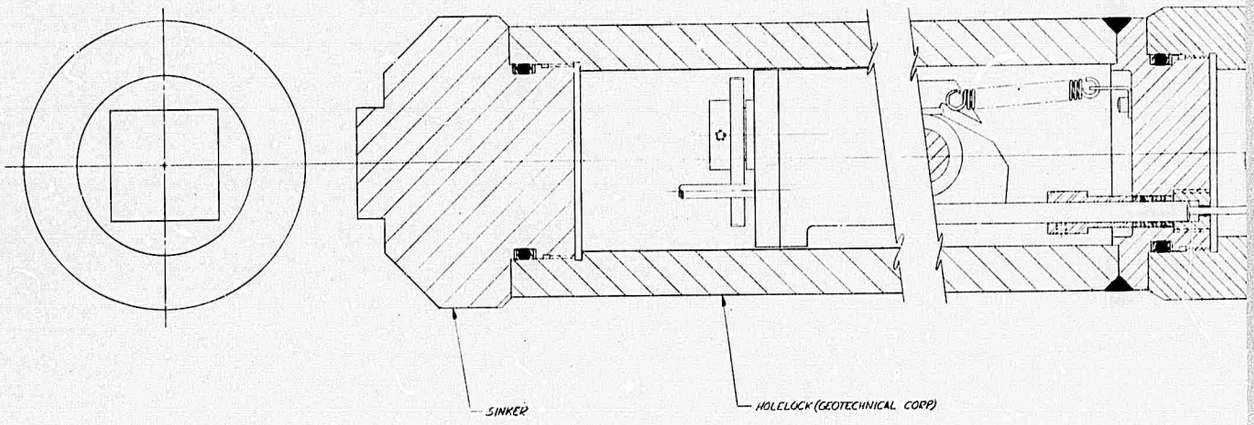

FIGURE 3 ASSEMBLY DRAWING OF
AND TILTMETER SEC

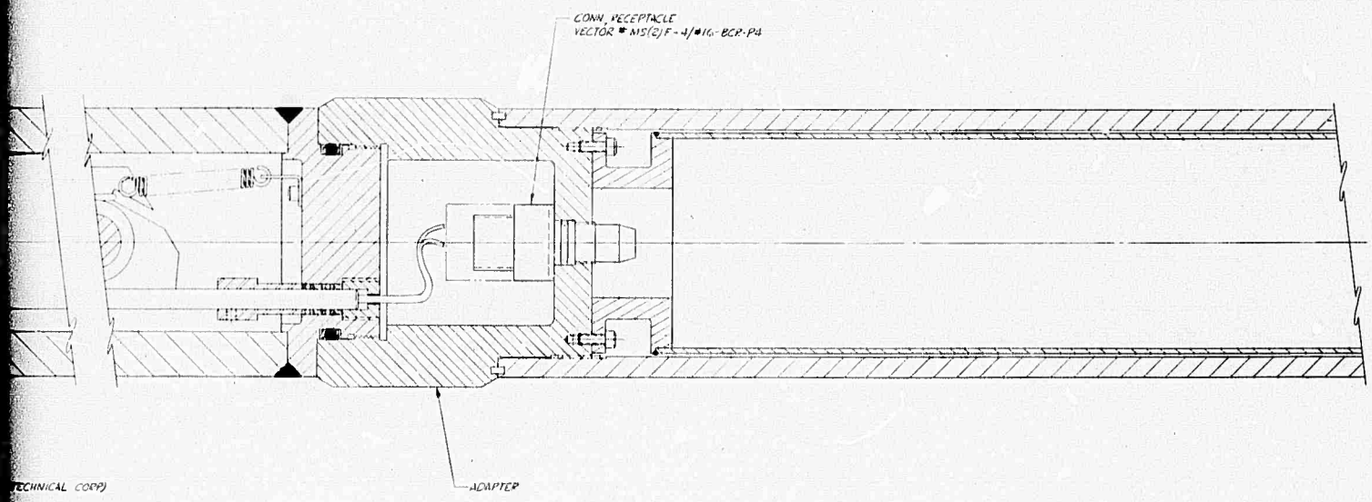

IGURE 3 ASSEMBLY DRAWING OF THE HOLELOCK AND TILTMETER SECTION

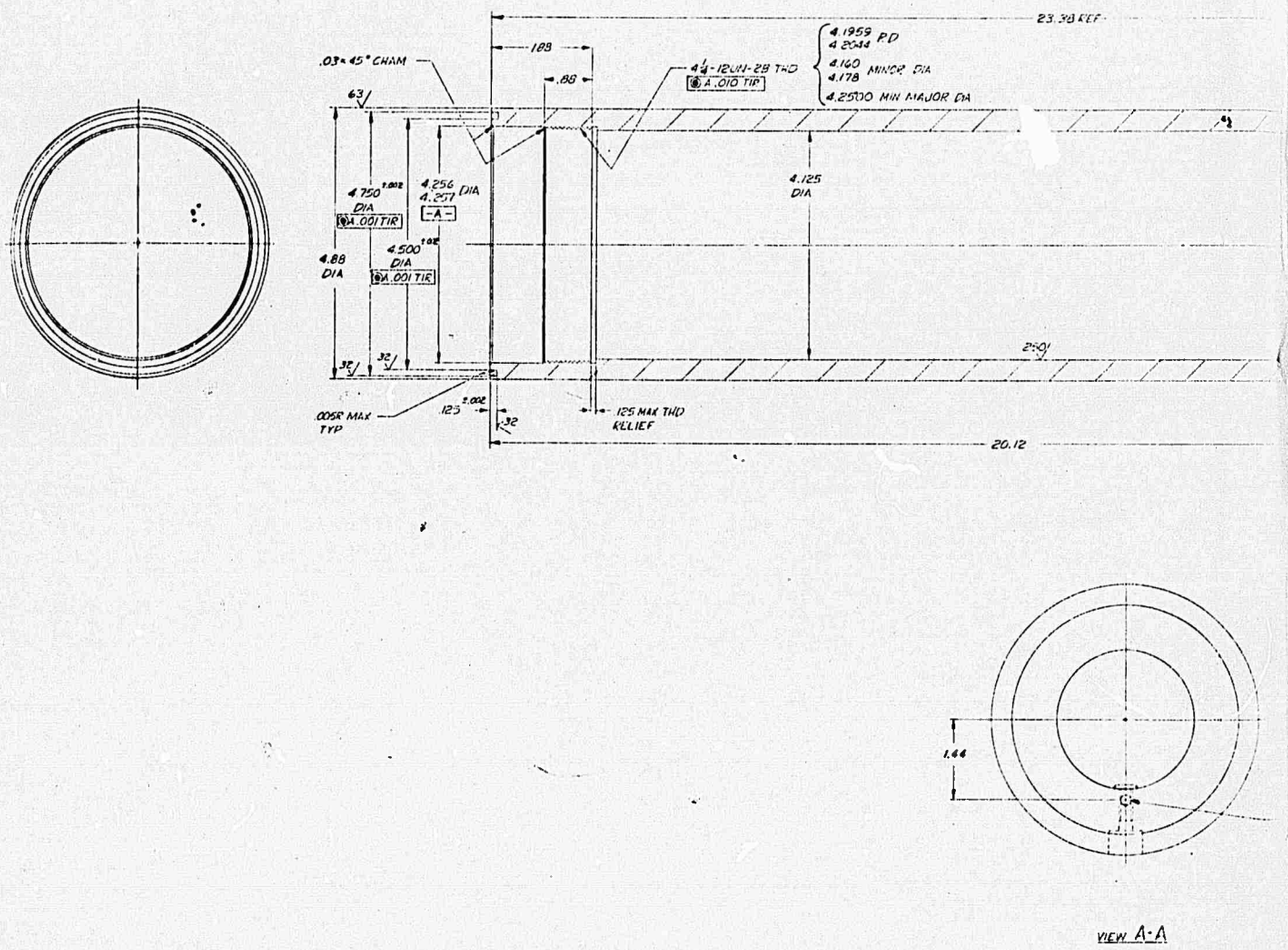

NOTE :
1. TEST WELDS WITH AN INTERNAL PRESSURE OF 20 PSIG AND HELIUM LEAK DETECTOR

FIGURE 4 DETAIL DRAWING OF P
TILTMETER SE

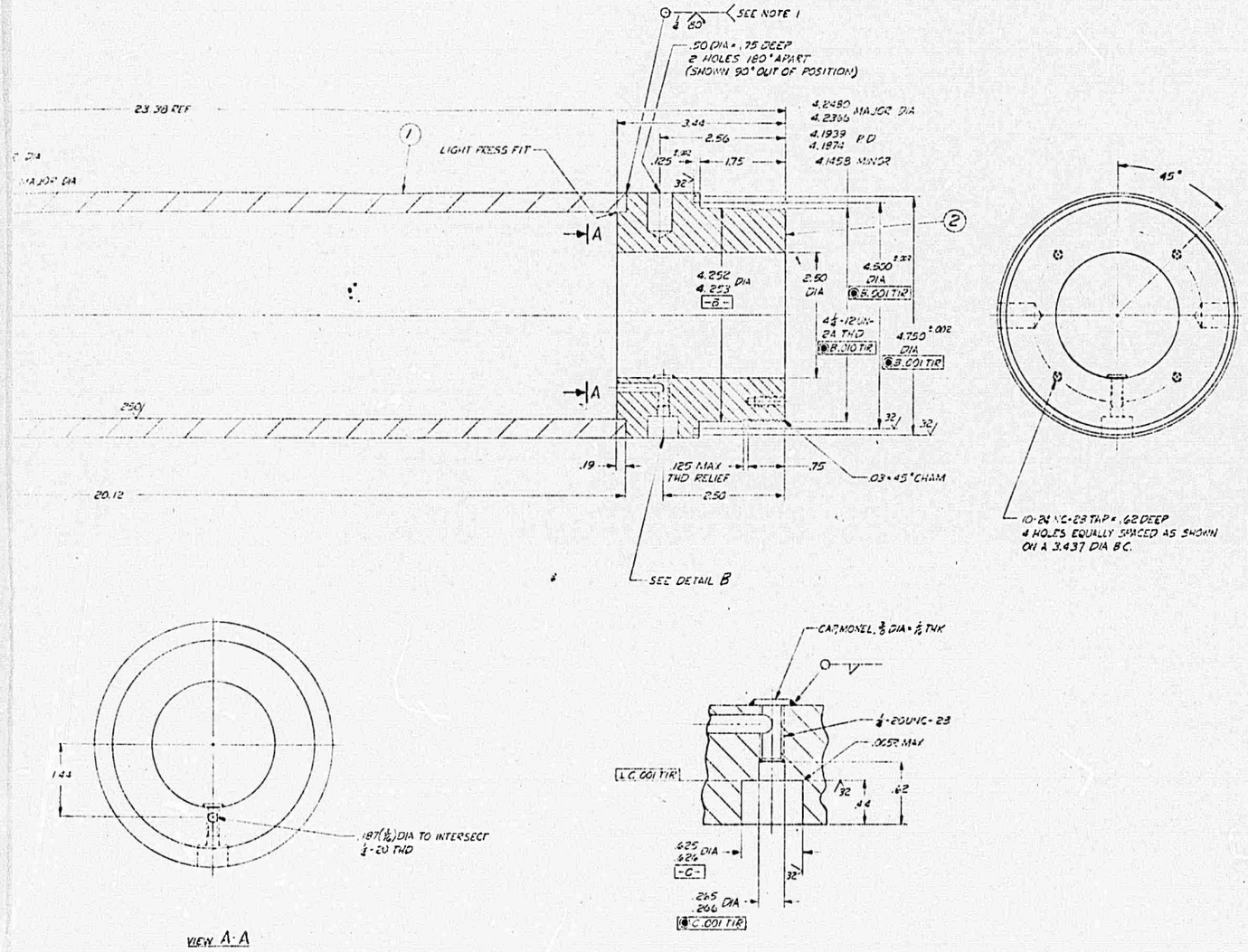

GURE 4 DETAIL DRAWING OF PRESSURE CASING, TILTMETER SECTION

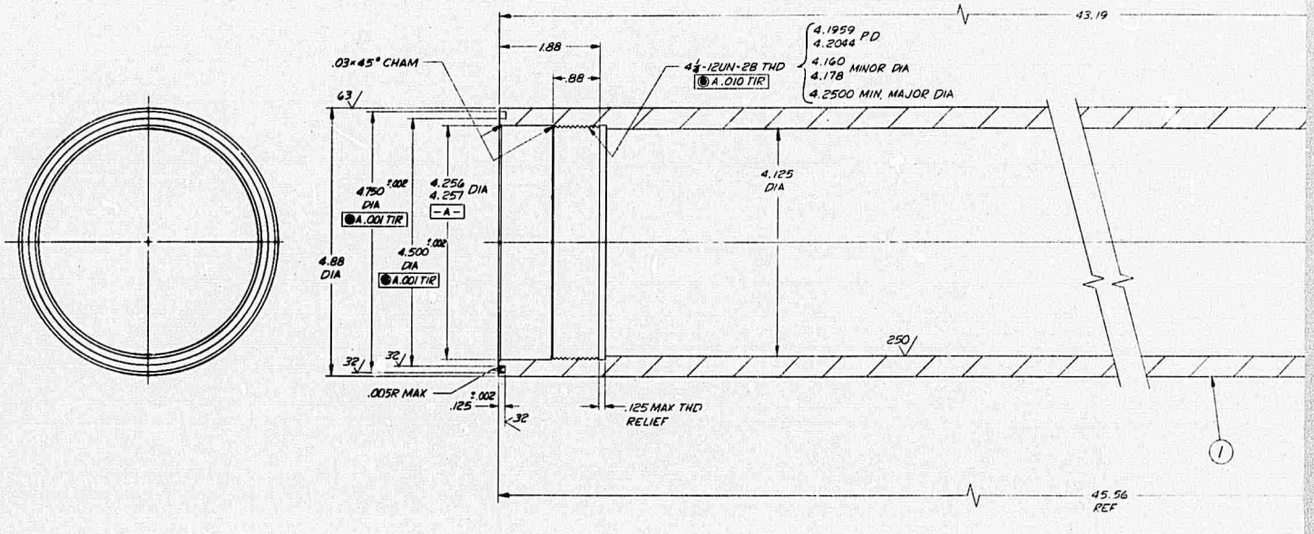

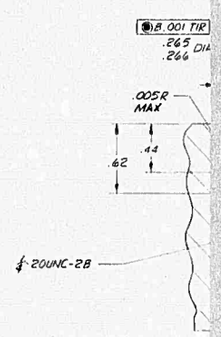

NOTE :
1 TEST WELDS WITH AN INTERNAL PRESSURE OF 20 PSIG AND HELIUM LEAK DETECTOR

FIGURE 5 DETAIL DRAW
ELE

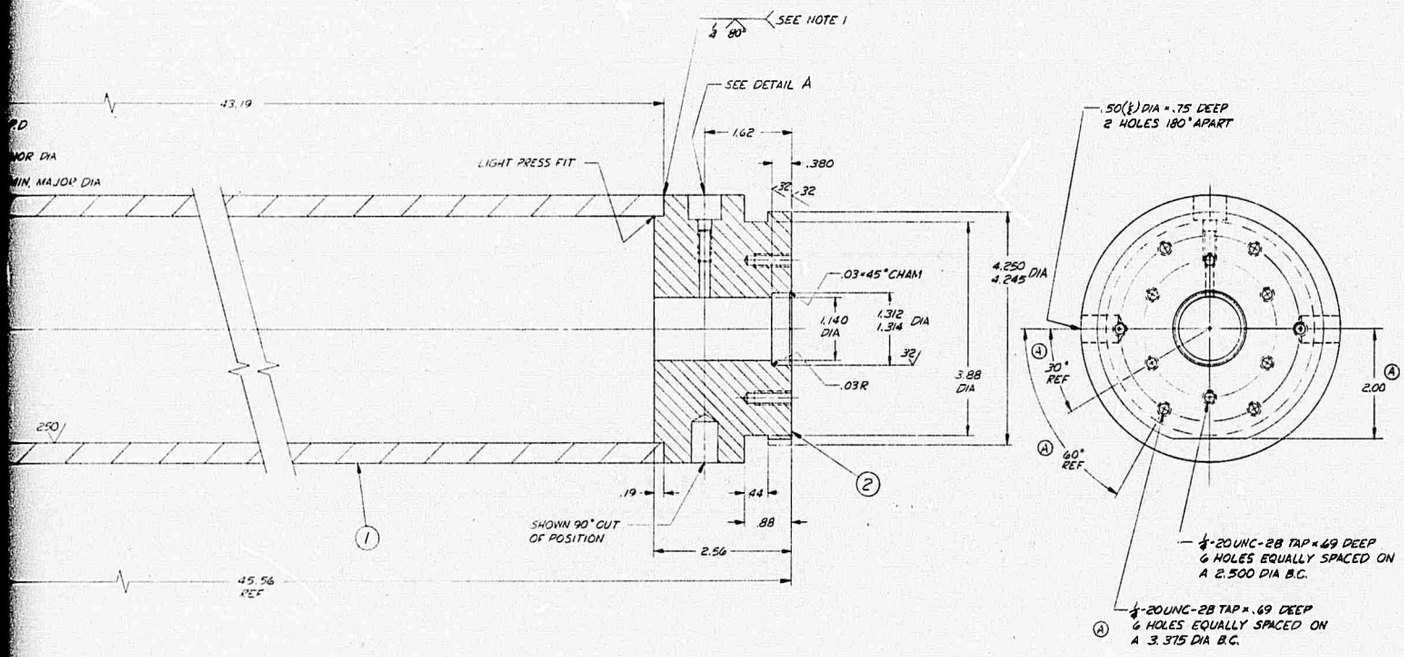

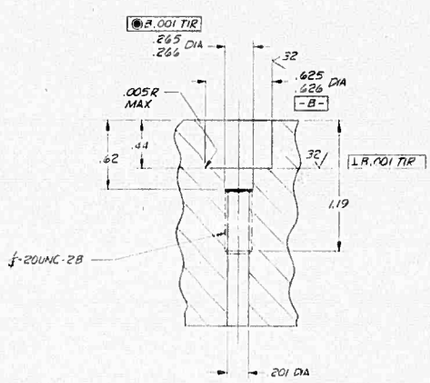

DETAIL A
SCALE: 2/1

FIGURE 5 DETAIL DRAWING OF PRESSURE CASING, ELECTRONIC SECTION

after the instrument has been placed and locked in the borehole. The upper end of the electronics case (Figure 5) has provision for attaching the mule shoe, which has been designed but not built. Final decision as to which of the two alternatives would be used in actual field application has not been made as yet.

IV. MECHANICAL DESIGN

A. HOLELOCK

The choice of a holelock manufactured by Geotech was made after a lengthy consideration of the possible methods to anchor the tiltmeter in an unambiguous manner to the well casing. The two overriding concerns were reliability and the need to remove all hardware at the conclusion of a test period to leave a clean hole. The Geotech holelock has an excellent record of reliability and could be purchased in a reasonable time for a reasonable cost. For this phase of our effort the usual material of construction, nickel plated tool steel was acceptable. For very long term installations the holelock must also be made of Monel. The stability of the mechanism (creep especially) over a period of time would be investigated in the laboratory and in a test hole since no information could be obtained from the manufacturer on this feature.

The standard Geotech holelock was modified as shown in Figures 2 and 3. A solid nose piece or sinker was added to close the front end. A rear adapter was designed to provide a seal to the tiltmeter casing and a mounting surface for the tiltmeter base. The electrical pressure tight connector was included as insurance against the holelock seal failure after extended operation since holelock down-hole life was unknown. Both sinker and adapter have enlarged outer diameters to provide, with the cam, three point support of the tiltmeter to the well casing. The wall thickness of the holelock body was increased from 1/4 inch to 0.81 inches for an overall body diameter of 4.88, the same as the remaining instrument housings. This increased wall thickness was made to increase weight and long term mechanical stability by reducing the bending deformations that would occur.

B. SEALS

The choice of Teflon seal rings completely filling a seal groove was based upon the corrosive environment, temperature and long life requirements. Our prior experience in designing seals for very high pressures in unusual environments (cryogenic as well as steam service) lead to the design shown in Figures 4 and 5. The main feature of this design is that the pressure source always tends to make the seal tighter. In the worst case of machining tolerances, the Teflon rings just fill the groove. To verify this design approach we constructed a seal test vessel 6-1/2 inches in diameter which contained the large ring seals and two types of the smaller purge hole seals.

C. TILTMETER CASINGS

The basic criteria for the choice of the casing dimensions were the smallest size of oil well casings into which the instrument was to be used, the minimum size that the tiltmeter sensors could be reduced to, and the pressure environment of 5,000 psi (see section III).

The Lamé equation for thick wall pressure vessels was used for the basic design of wall thickness. However, the American Petroleum Institute Bulletin 5C2 was used to determine the actual pressure rating since the criteria in this publication includes modification factors obtained from test results on tubular cross sections. This modified criteria includes deviations from the theory that occur in a real specimen such as out-of-roundness, inhomogenities, local yield, and non-linear effects.

The Lamé equation for the casings shown in Figures 3 and 4 and for a material yield strength of 100,000 psi (Monel K 500) gives a safety factor of 2.85 on the wall stress of 35,000 psi. The API equation for the same configuration gives a safety factor of 2.78 on the applied external pressure for collapse (with a fictitious wall stress of 45,800 psi). From this comparison it is concluded that the tiltmeter casings have such a small diameter-to-thickness ratio that modifying effects are relatively negligible. At the area of the seal rings the effective wall thickness of the female part is reduced to 3/16 inch and the resulting wall stress gives a theoretical safety factor of about 1.0. This area of the casing, however, is backed up or supported by the close fitting piloting land area of the mating male section and yield cannot occur. There are two purge holes (one in each casing) for flushing the assembled casings with dry nitrogen to preclude condensation either during shipment or under unusual operating conditions. In addition there are two blind 1/2 inch holes for inserting wrenching bars to aid in assembly and disassembly of both casing sections.

The tiltmeter casing section has a through hole at its upper base for electrical leads and mounting holes for the electronic chassis. The electronic casing section has at its upper base the proper termination hole for the Vector electro-mechanical receptacle and a piloting groove for attaching the Sperry gyro "mule-shoe". This "mule-shoe" assembly has been designed but not yet built since it is still undecided how reliable such an approach would be.

V. INSTRUMENTATION

A. TILTMETERS

Tilt sensors used in the deep hole instrument are of the diamagnetic suspension type described in our earlier work (Simon et al, 1969). For the present application they required a certain amount of redesign necessitated by the high operating temperature and the limited space available in the pressure case.

The inside working space for the tiltmeters in their supporting structure is approximately 3 1/2 in. in diameter. Allowing for the rotation up to 7.5° necessary for leveling in off-vertical boreholes the maximum size of the tilt sensors must not exceed 2-3/4 in. in any direction. This is considerably less than the size of standard diamagnetic tiltmeters. A more compact type of permanent magnet structure combined with a new type of polepieces resulted not only in the smaller overall size but also in the required large working range ($\pm$ 100 μrad) of the tiltmeter.

The way the tiltmeters are arranged in the biaxial unit is shown schematically in Figure 6 and the complete assembly is shown in a photograph, Figure 7. Two tiltmeters (X, Y) are mounted on a common plate P which is pivoted, via gimball ring G, to the cylindrical frame F. This frame is bolted to the main body of the holelock as described in section III and Figure 1. The gimbals provide the two degrees of freedom required when the tiltmeters are initially leveled after emplacement and locking in the borehole.

Leveling is accomplished by two reversible motors M_x and M_y anchored to frame F, winding up two stainless steel cables attached to a joystick on the upper (X) tiltmeter against tension supplied by two helical springs. The motors are of the synchronous, hysteresis-start type and are provided with a gear train reducing the speed of the output shafts to 1/240 RPM. This permits highly sensitive control of the leveling operation; the spring tension removes backlash almost completely.

In operation one of the two motors is operated at a time and the output of the corresponding tiltmeter is watched as the zero is approached. Operating the other motor may cause slight unbalance of the tiltmeter first leveled because the direction of the two cables cannot remain orthogonal over large deflections. However, by operating alternately the motors M_x, M_y it is possible to converge rapidly on the common level for both tiltmeters. Initial determination of the direction in which to proceed is aided by mercury level switches mounted on the tiltmeter plate P which provides a check voltage of either + or - 5 volts on the corresponding output channels, Nos. 00 or 01. The motors are provided

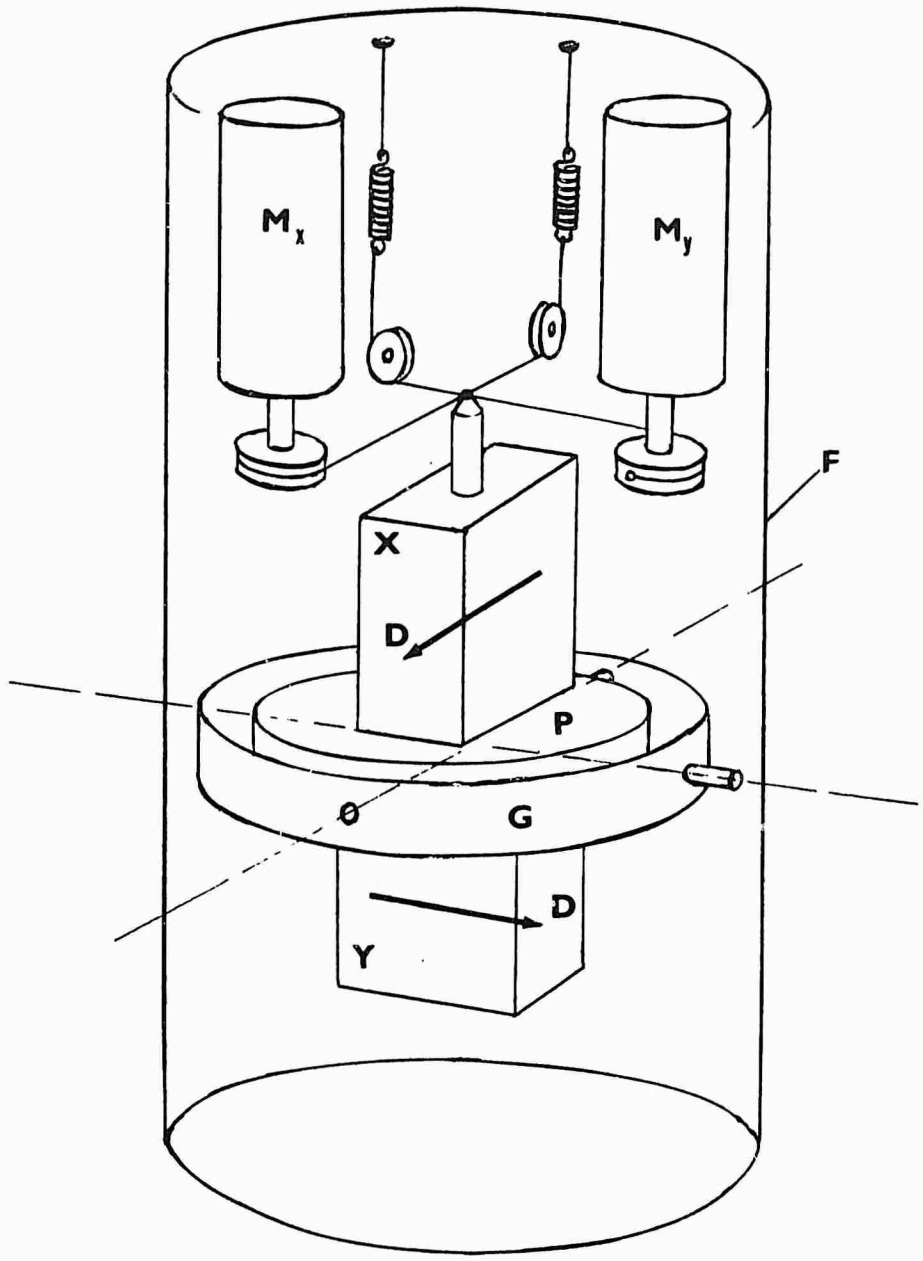

FIGURE 6 SCHEMATIC DRAWING OF TILTMETER ASSEMBLY WITH LEVELING MOTORS

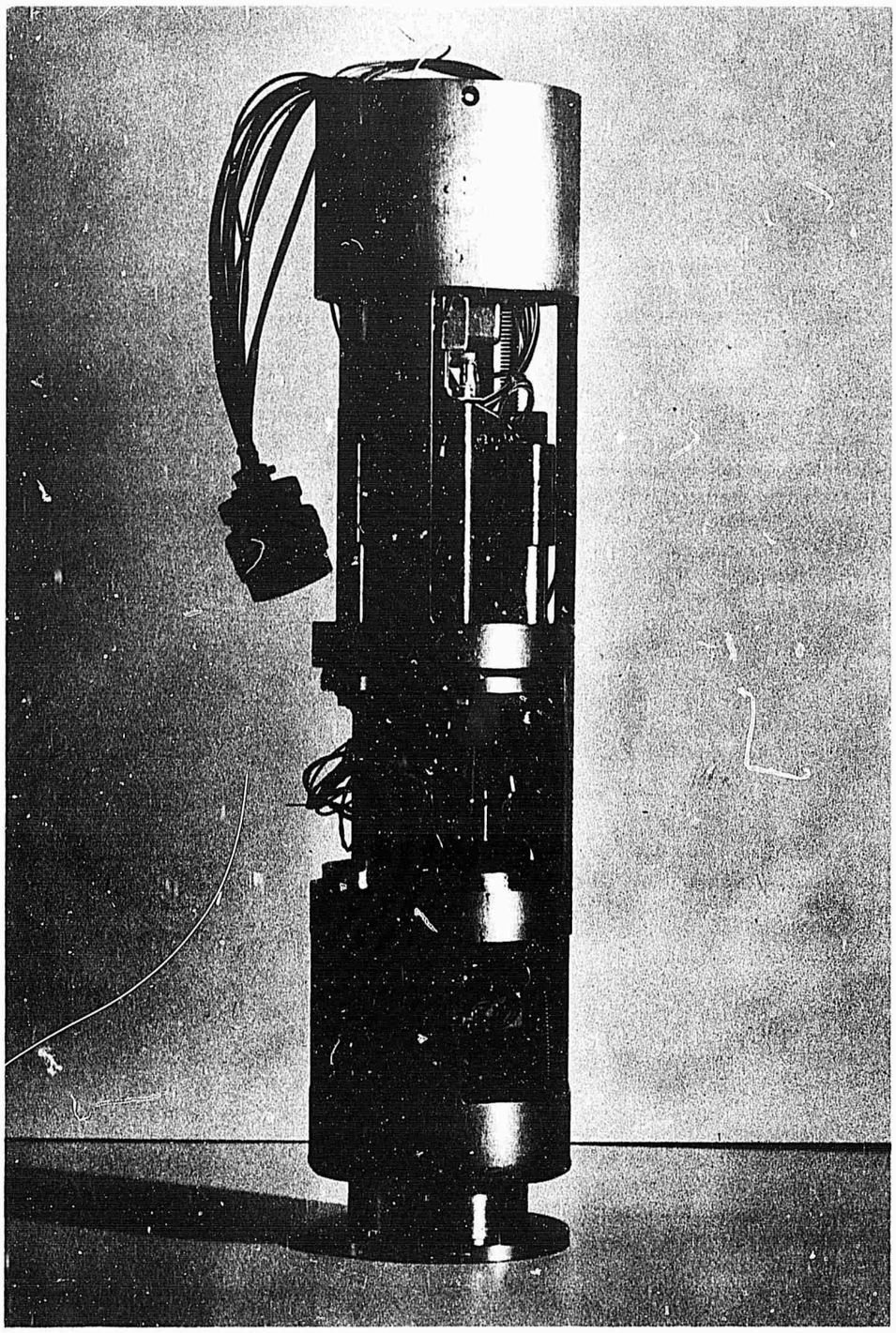

FIGURE 7 VIEW OF THE COMPLETE TILTMETER ASSEMBLY

with limit switches actuated by cams attached to the capstan pulleys. The limit switches have been set to stop the motors when the tiltmeters are inclined at $\pm$ 7.5° in either X or Y axis. When these limits are reached the motors can be operated only in the reverse direction. If the level position cannot be achieved within these limits the borehole is off-vertical by more than $\pm$ 7.5° and the instrument must be locked at another depth where the casing is closer to the vertical.

The tiltmeters generate an output voltage of either polarity depending on the direction of tilt in a suitably chosen coordinate system. We adopted a convention illustrated in a diagram, Figure 8. Let the X and Y axes be in the plane of earth surface and Z-axis point downwards in the direction of local gravity vector. The downhole instrument is located at a point P and levelled so that a reference element ds of the internal tiltmeter structure is initially vertical. By the deformation of the earth the whole instrument tilts by an angle θ whose components θ_x, θ_y are measured by the two tiltmeters oriented along the x and y axes. A tilt vector $d\tau$ is then defined by the components dx, dy as

$$d\tau^2 = dx^2 + dy^2,$$

$$\theta_x = \frac{dx}{ds}, \quad \theta_y = \frac{dy}{ds}, \text{ and}$$

$$\tan \alpha = \frac{dy}{dx} .$$

In reference to the direction of geographic North, the tilt has a bearing

$$\beta = \gamma - \alpha$$

where γ is the direction of N with respect to the X-axis. All angles are taken as positive when measured from the X-axis in the counter-clockwise direction.

In order to fix the direction with respect to the physical structure of the tiltmeters we take as the positive direction that which points (internally) toward the optical displacement detector (D in Figure 6) mounted on one side of the magnetic suspension structure. Consistent with the preceding convention we make the output voltage to be positive when the tiltmeter is tilted counter-clockwise, i.e., with the point of the arrow (Figure 6) rising.

The actual sensing element in the tiltmeter is a diamagnetic cylinder (float) levitated between the polepieces of the magnetic supporting structure. In the level position it is supported symmetrically about the center plane of the structure. When the structure is tilted in the positive direction the float slides, in a totally frictionless manner, away from the optical detector block. This block contains a miniature, long-life lamp and a dual light detector. In the level position the illumination of the two halves of the light detector is equal

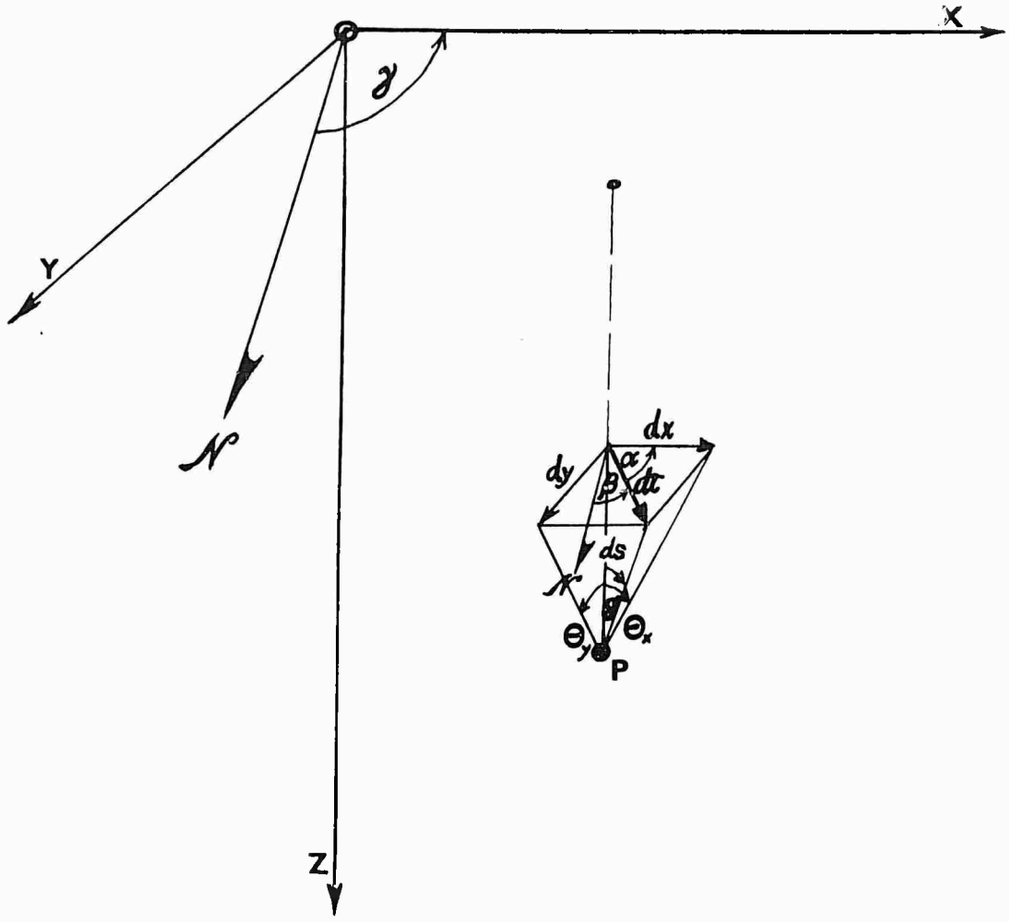

FIGURE 8 DEFINITION OF COMPONENTS OF TILT IN THE SYSTEM OF COORDINATES HAVING ORIGIN AT EARTH'S SURFACE

and the differential output is zero. When the float slides in the direction opposite to that of the arrow, the unbalanced illumination causes a positive differential output and vice versa.

The choice of the light detector for the deep-hole instrument was a matter of some difficulty because of the high temperature at which it is required to operate. For 120°C operating temperature only silicon devices appeared to be feasible; consequently, we had a number of dual silicon fotofets (field-effect, light sensitive transistors) made to our specifications. Unlike the previously used photoresistive devices (cadmium sulfide or selenide) in which the two halves are inherently matched, the dual fotofets consist of two separate silicon chips which can be matched only to a limited degree. A differential amplifier circuit is used to permit individual equalization of dc unbalance between the two elements and adjustment for tracking of the leakage (dark) current with temperature. In this way the optical detector system could be adjusted to operate with an acceptable amount of temperature drift (zero offset) over the specified range.

Physically, the two differential amplifiers are mounted on a printed circuit board located in the upper part of the tiltmeter assembly, adjacent to the leveling motors (see Figure 7). In the same space are also located the capacitors and relays for the motors. The whole assembly is electrically connected through a short cable and plug to the electronic module described in the following section.

B. ELECTRONICS

The electronics system associated with the deep borehole tiltmeter consists of two major functional subsystems, the data acquisition system and the control system (see Figure 9). These two systems are interconnected through the sharing of power supplies and common conductors in the seven conductor cable linking the control and printout panel and the downhole package. The electronics is also divided between the panel circuits and the downhole circuits.

One of the original design constraints was the limitation in the number of conductors in the cable connecting the downhole package and the panel. A seven-conductor cable was selected. This limitation required the multiple channels of data to be multiplexed and the specified precision (one part in 4000) weighed against the use of analog FM transmission. In the technique employed the data are time-multiplexed as analog voltages onto two of the conductors in the cable under the control of the data control subsystem located in the panel chassis. The data multiplexer is connected to provide nine data channels but can be readily modified to provide either more or fewer channels.

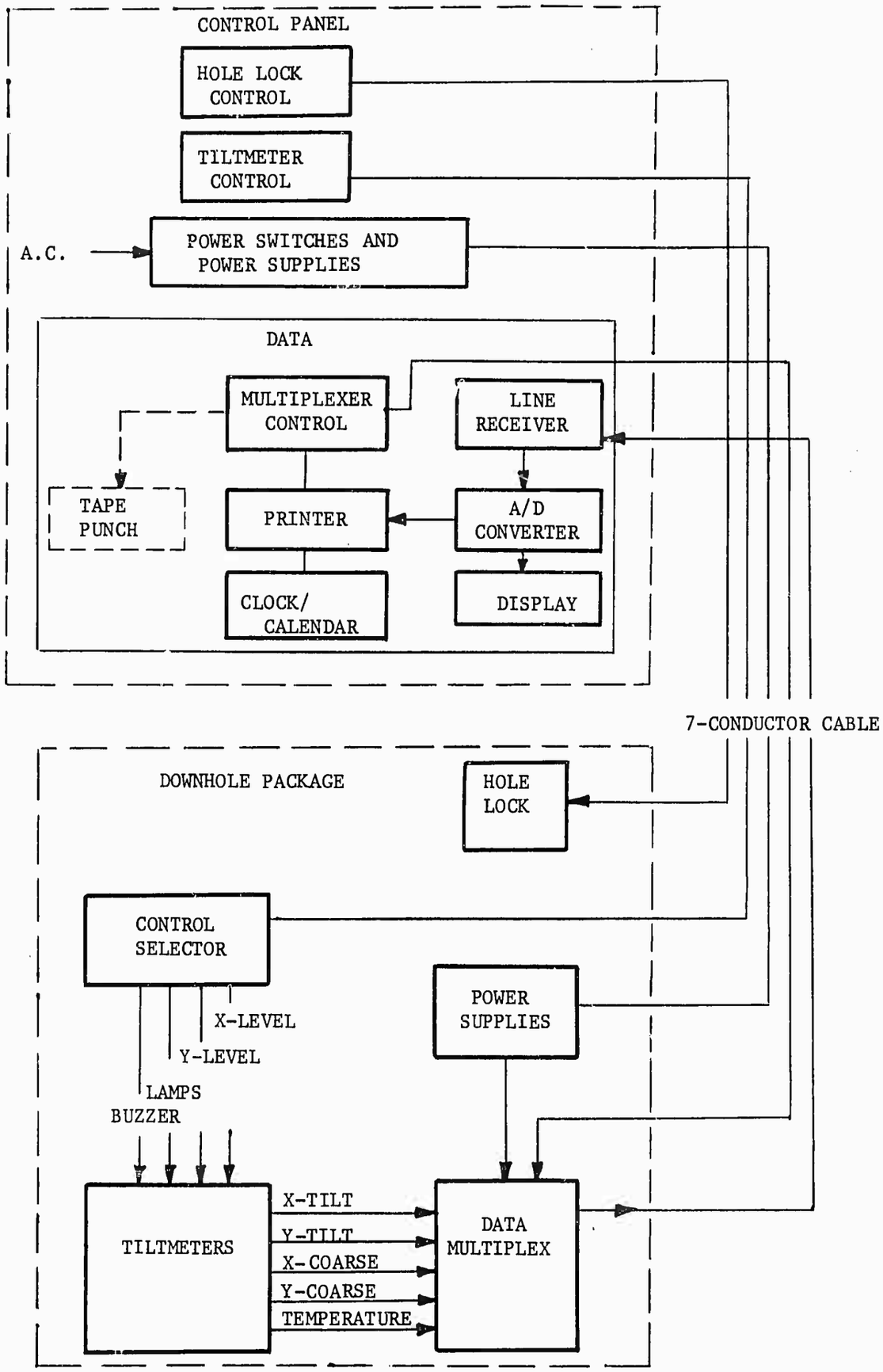

FIGURE 9 BLOCK DIAGRAM OF TILTMETER CONTROL AND DATA ACQUISITION ELECTRONICS

There are two modes of operation of the Data Acquisition System, automatic and manual (switch S3 on the front panel--see Figure 10). When S3 is switched to automatic, the printout cycle is initiated by an output from the digital clock at intervals selected by S6, the readout interval selector switch (see Figures 10 and 11), or by S4. When the automatic cycle is initiated, the counters controlling the data multiplexers and control selection are "cleared"; the printer advances paper three or four lines and a "trigger" pulse is transmitted to the analog-to-digital (A/D) converter which initiates an internal digitizing cycle. At the end of the digitizing cycle the A/D converter transmits the "End of Conversion" (EOC) pulse to the data control card which transmits a "hold" signal to the digital clock and the A/D converter and a "print" signal to the printer and at the same time advances the data multiplexer counters in the panel and in the downhole package. When the printer has printed one line it advances the paper and transmits the "End of Print" (COP) pulse to the data control card which begins the A/D cycle again. When the last channel is selected the EOP pulse is blocked and the next A/D cycle is not begun until a new sequence is originated by the clock or by S4. Note that at the end of the automatic sequence the display is switched to channel ten which is not connected. Operating S8 "resets" the data (and the function) control counters and the display is connected to the Y-axis tiltmeter output.

The controlling circuits for this sequence are located on printed circuit board No. 4 in the panel module. The counter (G2) in this circuit is paralleled by an identical counter in the downhole package which activates normally-open field-effect transistor (FET) SPST switches connecting each data line in turn to the A/D via the interconnecting cable and the panel input amplifier on p.c.b. No. 2.

When S3 is switched to the manual mode, actuating S4 advances the data control counter. Thus any one of the data channels can be monitored continuously. In addition, the displayed data can be printed by means of the printer controls. When S3 is in the manual position and S6 is not switched to "OFF" the system will print the displayed data and advance the data counter one channel.

The function control system permits the following operations under the control of the panel operator:

1. remote level in direction +Y
2. remote level in direction -Y
3. remote level in direction -X
4. remote level in direction +X
5. turn off tiltmeter lamps
6. turn on buzzer (vibrator).

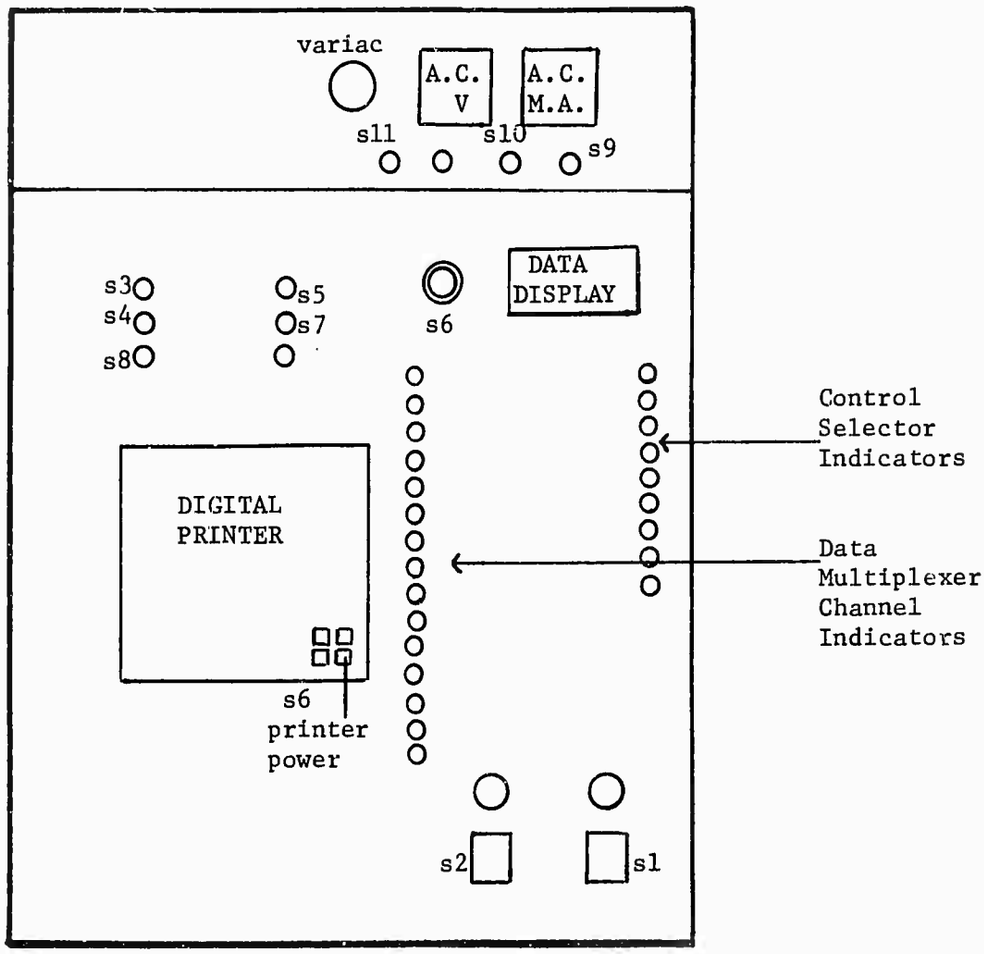

FIGURE 10 IDENTIFICATION OF CONTROL SWITCHES ON CONTROL PANEL

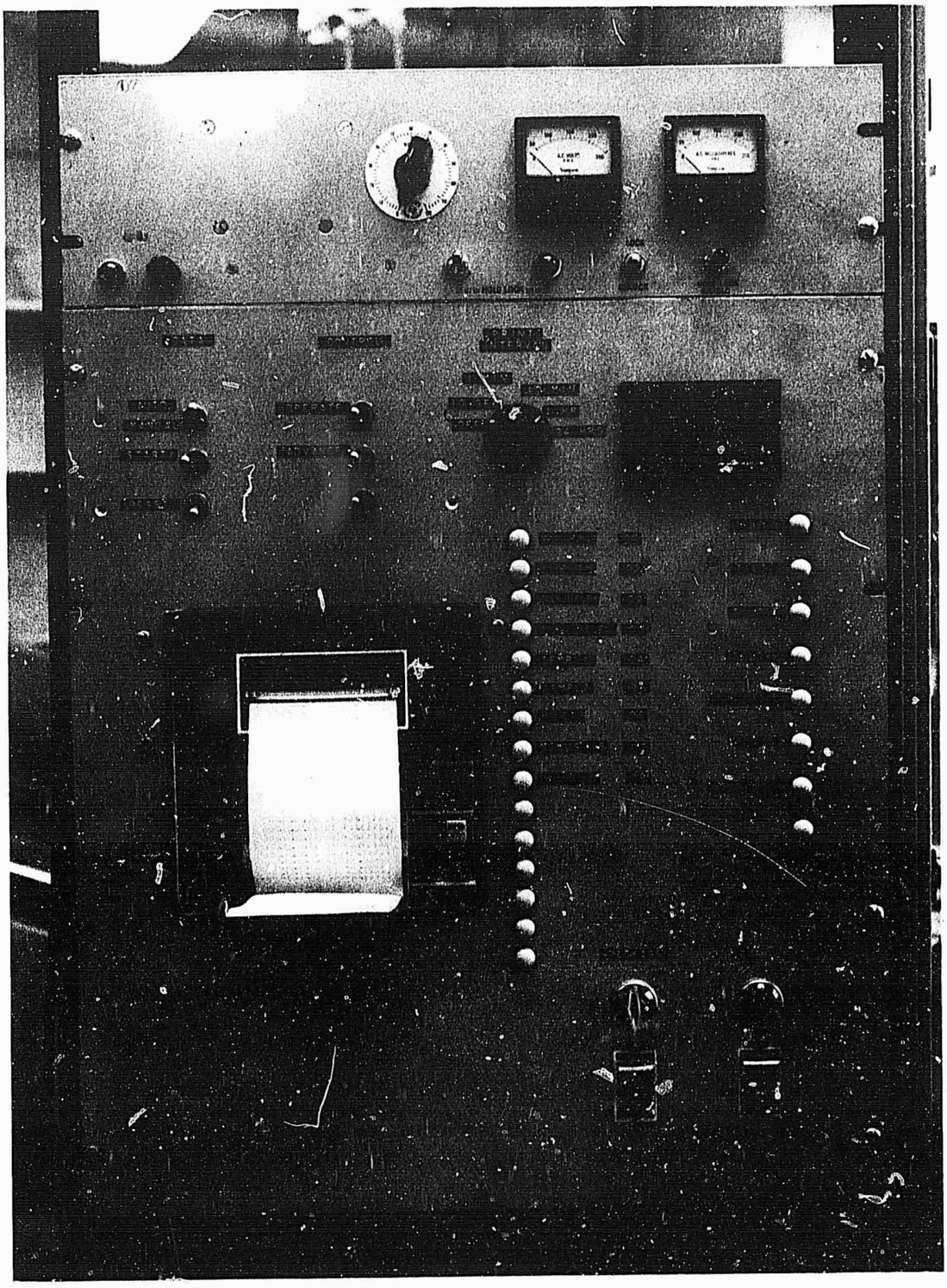

FIGURE 11 VIEW OF THE CONTROL AND DATA ACQUISITION ELECTRONICS

Simple additions to the system as it stands could allow a total of 15 functions, if desired. Each triggered automatic cycle of the data control system "clears" the function control counters in the panel and downhole circuits so that no function is selected. The purpose of this is to reduce the likelihood of accidental operation of any of the downhole functions. The control function counters are advanced by means of S7.

The following sequence would be followed to operate the tiltmeter leveling motors:

i. set S3 on "Manual"

ii. operate S8 momentarily

iii. operate S4 to advance the data display to indicate the output of the tiltmeter of interest

iv. operate S7 to advance the control counters to the desired function

(The status of both the data and the control counters are displayed on the control panel.)

v. operate the selected motor by means of S5 and the behavior of the tiltmeter output monitored via the (digital) data display.

Position 5 permits turning off the lamps in both tiltmeters which permits an evaluation of the offset errors of the complete readout system for both tiltmeters.

The holelock activation system was made separate from the other tiltmeter controls to provide added security against accidental lock release. The holelock motor is powered and controlled from the panel via the a.c. power and the control ground conductors in the cable.

Two views of the complete electronics for the downhole package are shown in Figures 12 and 13. A.C. power at 117v is provided to the package via a Variac to permit partial compensation for line voltage drop whenever a very long cable is used between the panel and the downhole package. The a.c. voltage on the line is indicated on a panel meter. In addition, the voltage regulators in the downhole package will tolerate a very wide range of a.c. input voltage. The outputs of the three voltage regulators at +15v, -15v, and -10v are printed out during each print-out cycle to indicate the conditions of the regulators and are also useful as references to check the operation of the entire data multiplexing system at each printout cycle.

The panel circuits can be energized without applying power to the downhole package but not vice-versa. Power is supplied independently to the digital clock/calendar so that repairs and checks on the panel electronics can be made without the requirement to update the clock each time.

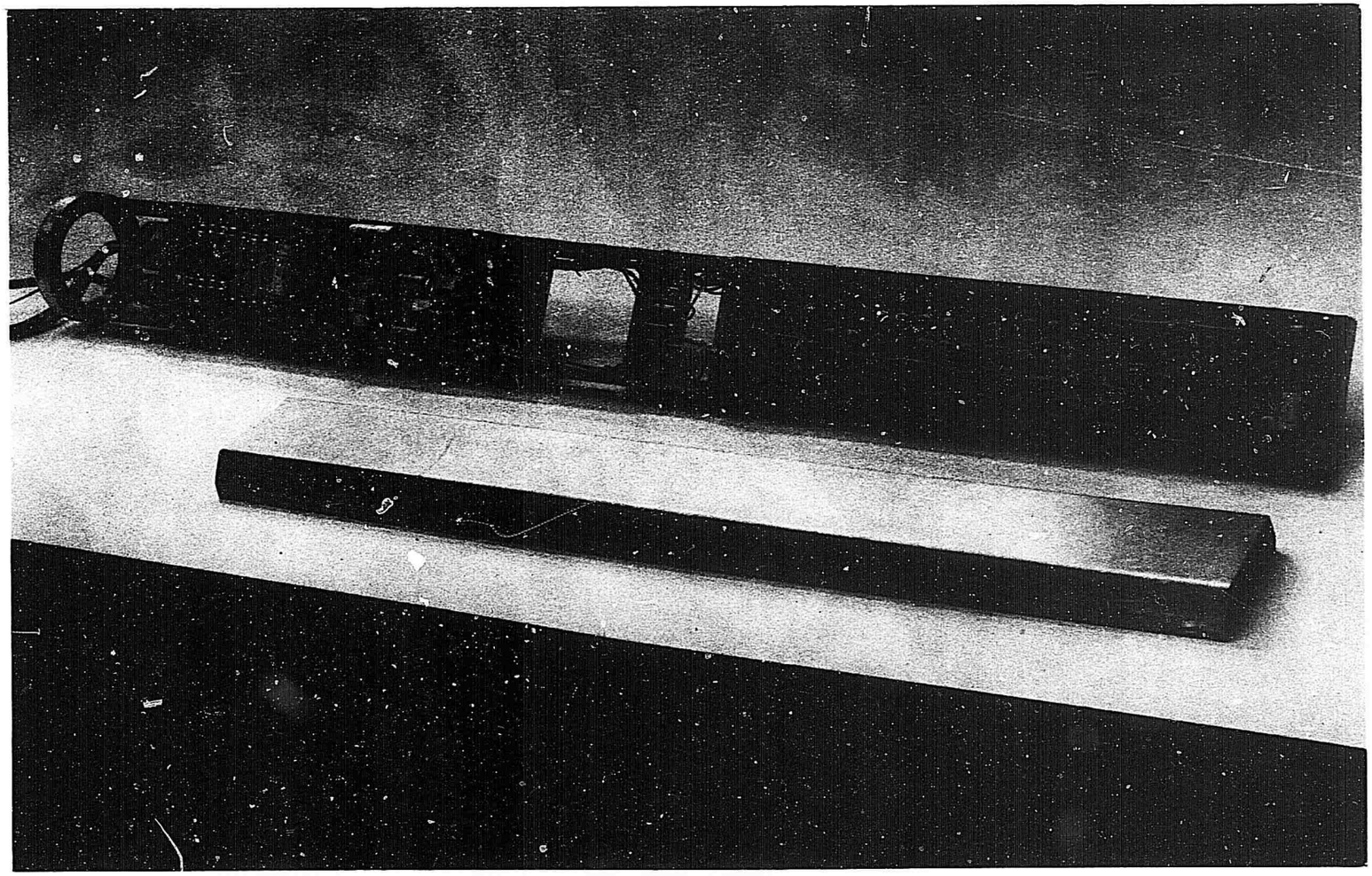

FIGURE 12 FRONT VIEW OF THE DOWNHOLE ELECTRONICS PACKAGE

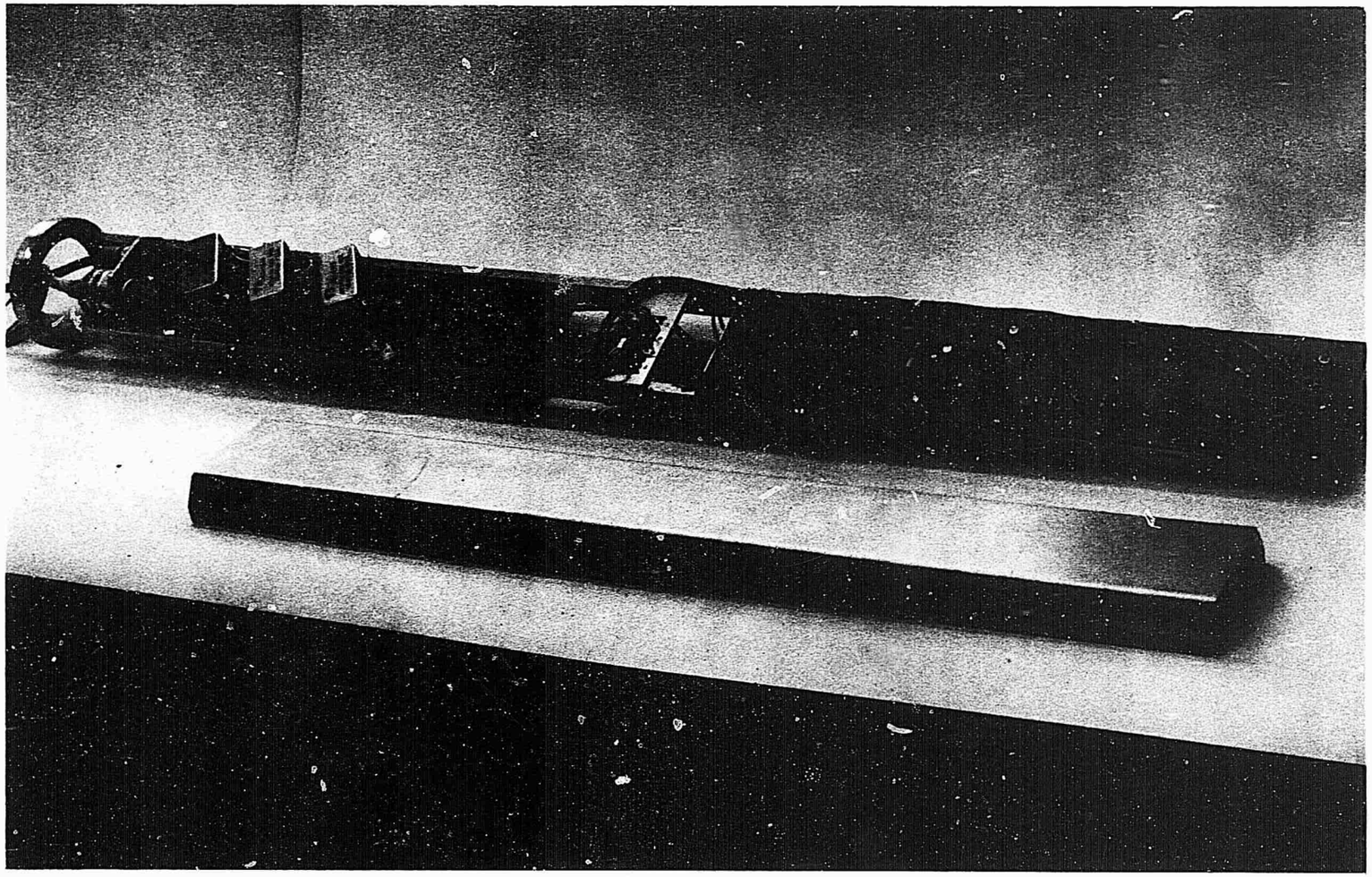

FIGURE 13 BACK VIEW OF THE DOWNHOLE ELECTRONICS PACKAGE

VI. TESTS

A. CALIBRATION AND STABILITY TESTS OF TILTMETERS

All tiltmeters have been tested and calibrated individually and again after assembly in the complete tiltmeter module. The basic tool used for calibration of tiltmeters was a tilt table of accurately known base length provided with a precision micrometer screw. The micrometer screw was operated manually, either directly or by means of a secondary micrometer screw. For determination of the frequency response of the tiltmeters the micrometer screw was driven periodically by a variable speed motor drive.

Examples of calibration curves of the two tiltmeters of the first downhole unit are shown in Figures 14 and 15. These are preliminary static calibrations made on tiltmeters X and Y before they were incorporated in the downhole unit. The point-by-point data were machine plotted and fitted by a computer program to third-order polynomials, the coefficients of which are printed in the upper right corner of the figures. Two curves are shown in the figures; one for 25°C and the other for 120°C operating temperatures. The B(1) terms of the polynomials are the sensitivities expressed in μrad per volt. The sensitivities seem to decrease by 5 to 10 percent at the maximum operating temperature. The overall tilt range is seen to exceed the originally specified range of ± 100 μrad by a factor of 2 or more. In fact, the overall range extends for about ± 500 μrad (or ± 1.6 arc sec); however, beyond 200 arc sec the calibration curves become quite nonlinear.

The frequency response curves for the same tilt sensors are shown in Figure 16. The curves were determined at constant tilt amplitude and the response is normalized to unity at zero frequency. The tiltmeters are seen to be underdamped (approximately 0.4 to 0.45 of critical damping value) and their natural frequencies correspond to periods of approximately 1.1 and 1.2 sec for X and Y tiltmeters, respectively.

After obtaining the data discussed above in our Cambridge laboratories we transferred the complete tiltmeter assembly to a seismic vault at Harvard, Massachusetts for stability tests. The tests were started on 28 May 1971 and were still in progress at the end of the present reporting period (15 June). In these tests the tiltmeter assembly, complete with the downhole electronics module was placed on a pier in the underground vault and connected to the uphole electronics panel by seven individual shielded cables approximately 50 feet long. The tiltmeters were then leveled from the laboratory upstairs by operating the leveling motors as described in Section VB. The automatic data printout was then activated and the system left alone. The departure of the tiltmeter readings from the initial setting ("zero drift") was thus continually recorded; the records were periodically collected and analyzed.

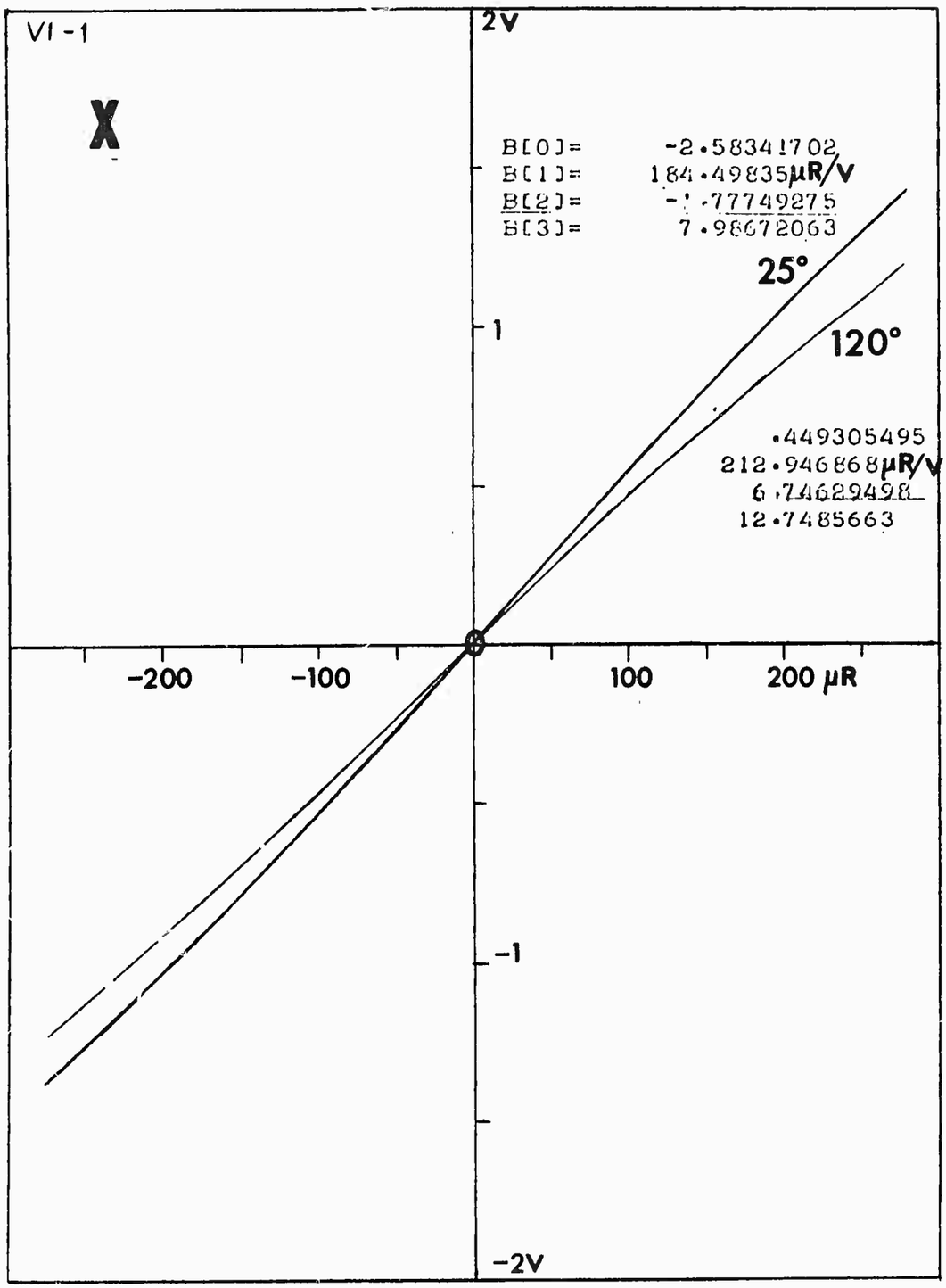

FIGURE 14 CALIBRATION CURVES OF THE X-TILTMETER AT 25° AND 120°C

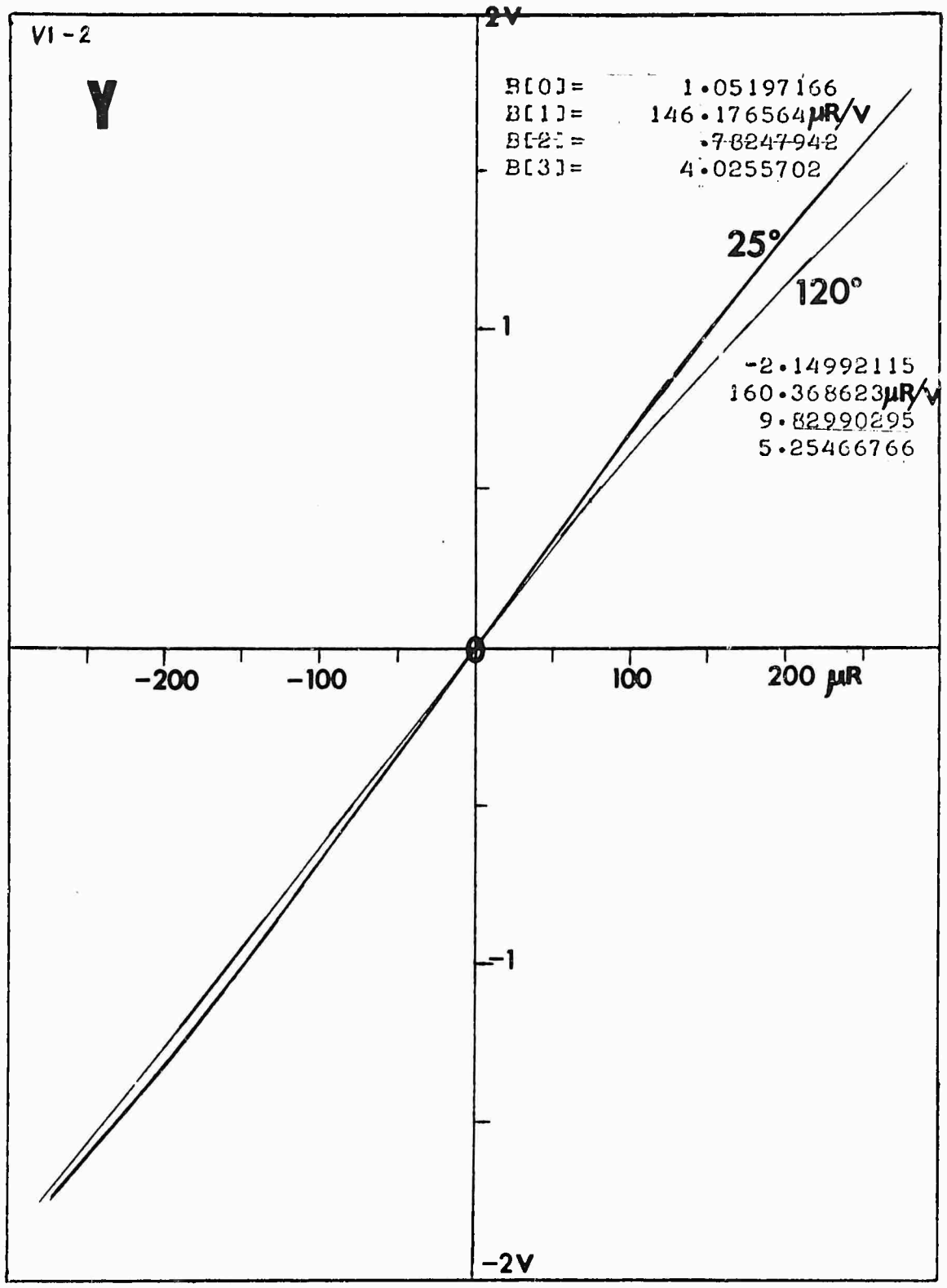

FIGURE 15 CALIBRATION CURVES OF THE Y-TILTMETER AT 25° AND 120°C

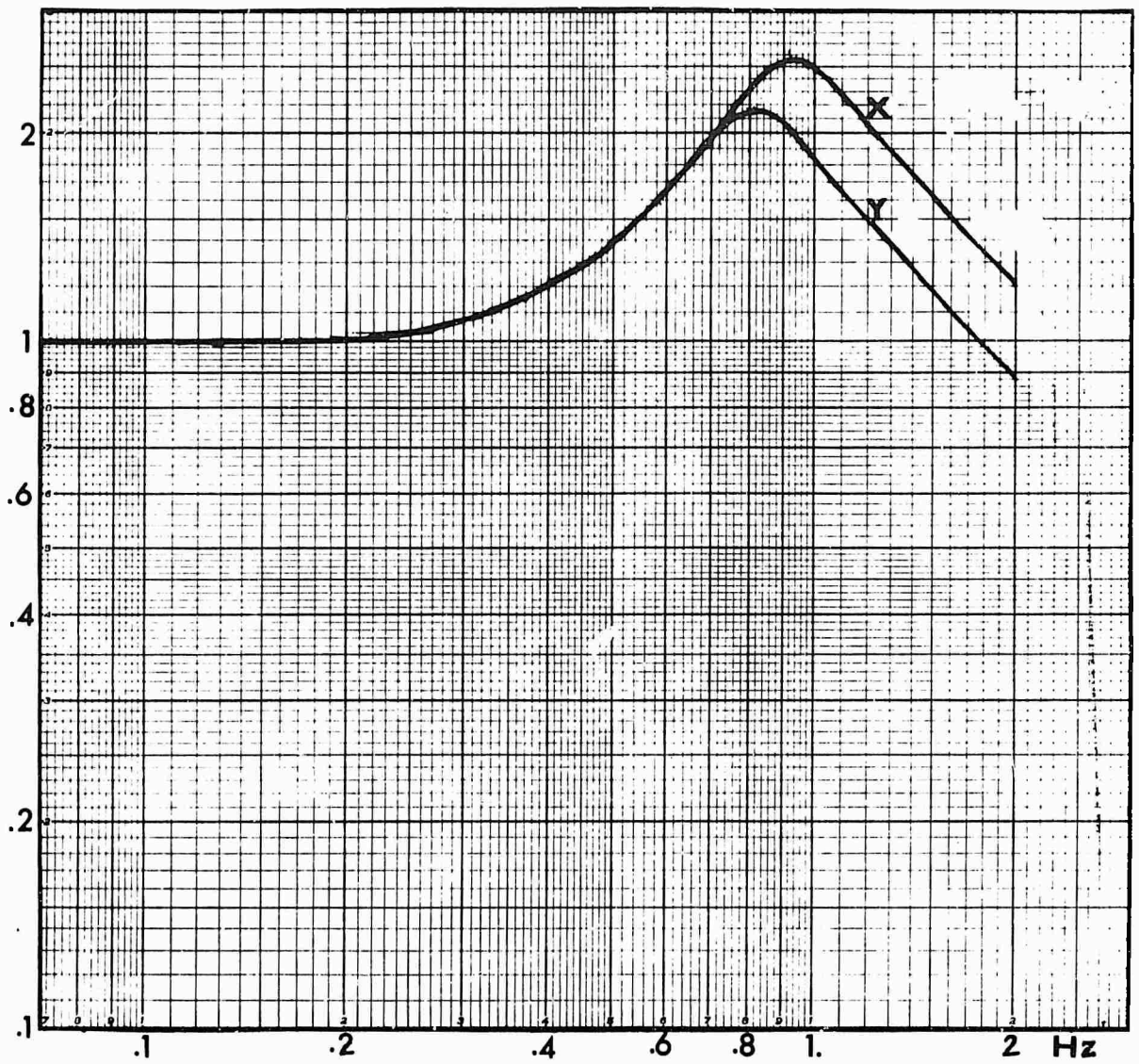

FIGURE 16 FREQUENCY RESPONSE CURVES (AMPLITUDE) OF THE X AND Y TILTMETERS

Typical experience gained thus far from the various series of records may be described as follows. The X-tiltmeter has a high initial drift rate (∿43 μr/day) than the Y-tiltmeter (∿27 μr/day) but it settles down more rapidly. Its drift rate dropped to 3μr/day after 12 hours and became essentially zero after 4 days. The Y-tiltmeter had a drift rate of 8μr/day at 12 hours from start and 0.8μr/day after 4 days; its drift was ∿0.2μr/day after 9 days and it seemed to be slowing down continually at the conclusion of the last observation period. The stability performance of the X-tiltmeter may be considered normal and satisfactory. The Y-tiltmeter does not seem to be satisfactorily stable, judging from the preliminary data outlined above. Further tests will be performed to determine the cause of the slow drift and to decide if it should be replaced.

B. RING SEAL PRESSURE TESTS

In order to establish the validity of the Teflon square-ring seal design approach a small internally pressurized test vessel was constructed of mild steel. This very thick wall cylinder was 6-1/2 inches O.D., in two sections, threaded together with a 5 inch, 12 pitch thread for a total vessel outside length of 4-1/4 inches. The Teflon seal had a 4-1/4 inch inner diameter which was different from the final casing design diameter of 4-1/2 inches. In all other respects, tolerance build-up, surface finish, etc., the seal arrangement was identical to that proposed for the final design. In addition to the high pressure inlet port, two forms of purge hole seals were incorporated in the cylinder ends. Machining and assembly was carried out with normal shop practices with no special effort to assure cleanliness. Initial attempts to pressurize the vessel led to a better definition of the required tolerances for the purge hole seal design and was remedied with rework of the screws. The pressurizing fluid was a light lubricating oil tagged with a fluorescent dye to identify the source of any leaks.

After pressurizing to 5000 psi, the vessel and seals maintained their integrity for 12 days without leaks. Pressure variations with vessel temperature changes was noted and seemed to correlate. Next, the pressure was reduced to 2000 psi at 74°F and the vessel temperature was raised to 110°F over the next 7 hours with a heat lamp. The pressure was correspondingly increased to 5000 psi. Cooling overnight reduced the pressure to 2300 psi at 74°F. The pressure was then further reduced to 500 psi at 72°F and the temperature was increased to 131° in 6 hours to cause the pressure to increase to 5000 psi.

Natural cooling was allowed and the system pressure dropped to 600 psi at 73°F. In this condition the vessel maintained the pressure for the 12 days. In all, the system showed a pressure-temperature variation of about 82 psi per degree F. No leaks were detected throughout the test.

Upon disassembly small metal chips were detected in the seal grooves and imbedded in the seals. The large seal grooves showed a run-out mismatch of about 0.005 inches and the Teflon conformed to this run-out by cold flow distortion.

We concluded that the test was satisfactory and, demonstrated the ability of the design to accommodate tolerances that were equal to or beyond those specified in the final design.

VII. APPENDIX

ESTIMATE OF TILTS FOR RANGELY FIELD EXPERIMENT

by

J. B. Walsh

Consider pressure sources at depth radially symmetric about $r = o$. Tilt is measured by a tiltmeter in a vertical borehole at some arbitrary position and depth.

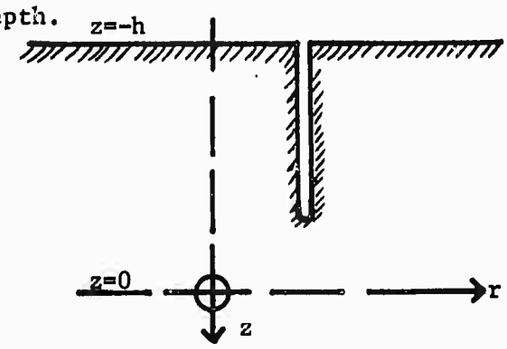

What is the order of magnitude of tilt for a pressure increase ΔP at the source? For a radial displacement $-u$, tilt θ is defined as $\frac{du}{dz}$. Note that θ, as measured by a tiltmeter with a vertical base, is $\frac{\partial u}{\partial z}$ whereas θ measured by meter with a horizontal base is $\frac{\partial v}{\partial r}$, where v is vertical displacement. These two will not be the same except at points where the shear $\tau_{rz} = 0$.

Let us say that the compressibility of rock in the region being pumped is much greater than that of the solid matrix, and much greater than $\eta\beta_f$, where η is porosity and β_f is the compressibility of the fluid. For this case, one can show that the increase in stress acting on the boundaries of the pressurized volume is equal to the increase in pressure of the fluid in the pores.

Isolated Spherical Source

For thick spheres (Timoshenko and Goodier)

$$w = \frac{pa^3}{4\mu} \frac{1}{r^2} \tag{1}$$

where w is the displacement in any radial direction, with the center of the sphere as origin, and μ is rigidity. Therefore,

$$u = w \cos \alpha$$

$$z = r \sin \alpha$$

and

$$u = \left(\frac{pa^2}{4\mu}\right) \frac{\sin^2\alpha \cos\alpha}{z^2}$$

$$\theta = \frac{\partial u}{\partial z} = -2 \left(\frac{pa^3}{4\mu}\right) \frac{\sin^2\alpha \cos\alpha}{z^3} \tag{2}$$

Maximum tilt at some arbitrary distance source occurs where $\frac{\partial\theta}{\partial\alpha} = 0$.

$$\frac{\partial\theta}{\partial\alpha} = -2 \left(\frac{pa^3}{4\mu}\right) \left(\frac{1}{z^3}\right) (2 \sin\alpha \cos^2\alpha - \sin^3\alpha) = 0. \tag{3}$$

Hence,

$$2 \cos^2\alpha = \sin^2\alpha \qquad \text{or} \qquad \tan\alpha = \pm 0.707$$

$$\alpha = \pm 35.26° \tag{4}$$

That is, tilt is a maximum along radial lines extending at $\pm$ 35.26° from the origin of the source.

At the surface, we can find tilts from Mogi's analysis:

$$v = 3\left(\frac{pa^3}{4\mu}\right)\frac{r}{(h^2+r^2)^{3/2}}$$

$$u = 3\left(\frac{pa^3}{4\mu}\right)\frac{r}{(h^2+r^2)^{3/2}} \tag{5}$$

where h is depth of source below surface. Here, because $\tau_{rz} = 0$ at the surface (z = -h) tilt is given by $\partial v/\partial r$ as well as $\partial u/\partial z$:

$$\theta = \frac{\partial v}{\partial r} = 3\left(\frac{pa^3}{4\mu}\right)\left(-\frac{3}{2}h\right)\frac{1}{(h^2+r^2)^{3/2}}\,(zr)$$

$$= -9\left(\frac{pa^3}{4\mu}\right)\frac{rh}{(h^2+r^2)^{3/2}} \tag{6}$$

The location of maximum tilt is found by setting $\frac{\partial\theta}{\partial r} = 0$:

$$\frac{d\theta}{dr} = 0 = \frac{h}{(h^2+r^2)^{5/2}} - \frac{5}{2}\frac{rh(2r)}{(h^2+r^2)^{7/2}}$$

$$h^2 + r^2 = 5r^2 \tag{7}$$

$$r = h/2.$$

Magnitude of the maximum tilt at surface is

$$\theta_{max} = \frac{pa^3}{4\mu}(9)\left(\frac{h^2}{2}\right)\frac{1}{(h^2+\frac{h^2}{4})^{5/2}}$$

$$= \frac{p}{4\mu}\left(\frac{a}{h}\right)^3\frac{9}{2(1.25)^{5/2}} \tag{8}$$

$$= 0.644\left(\frac{a}{h}\right)^3\left(\frac{p}{\mu}\right)$$

Magnitude of maximum tilt at depth occurs at the surface of source, where $z = a \sin \alpha$

$$\theta = -2 \left(\frac{pa^3}{4\mu}\right) \frac{\sin^2\alpha \cos\alpha}{a^3 \sin^3\alpha} = \left(\frac{p}{4\mu}\right) \frac{2}{\tan\alpha} \tag{9}$$

At maximum, $\tan \alpha = .707$

$$\theta_{max} = 0.57 \left(\frac{p}{\mu}\right) \tag{10}$$

If we assumed that the effect of free surface were negligible, maximum tilt from an isolated spherical source would be

$$\theta_{max} = 0.57 \left(\frac{p}{\mu}\right) \left(\frac{a}{h}\right)^3 \tag{11}$$

Comparing (11) and (8), we see that maximum tilt from the two models has nearly the same value, although location of the maximum is different.

Horizontal lens-shaped source

Sun (1969) analyzed the case where the region being pressurized is a penny-shaped crack. Tilts for this case are approximately the same as for a narrow lens-shaped region. Sun's final results are equations for horizontal and vertical displacements at the surface of the ground. These are complicated expressions, and differentiating them to find tilts and evaluating the results would be quite time consuming. Deriving expressions for tilts at depth, although straightforward with Sun's analysis at hand, would be even more tedious. Therefore, we consider only the case that Sun worked out numerically. This is referred to in his paper as injection 2. The parameters are: Depth 212m, radius 88 m, injection pressure at bottom 179 kg/cm^2, $\approx$174 bars , $\mu = 0.8 \times 10^5 kg/cm^2$. Maximum tilt calculated from the measured surface uplift is

$$\frac{15mm}{250m} = 60\ \mu rad$$

Maximum tilt occurred at a distance about 100 m to 150 m from injection well.

To estimate the tilt that may be expected at the Rangely, Colorado site of injection we assume the following values.

$$\text{Depth} = 6000 \text{ ft} \approx 2 \text{ km}$$

$$\text{pressure change} \approx 100 \text{ bars}$$

$$\mu \approx 1.4 \times 10^5 \text{ bars}$$

Therefore, we find by scaling Sun's results that the radius of the pressurized region at Rangely reaches the radius

$$r = 2000 \left(\frac{88}{212}\right) = 800 \text{ m}$$

The maximum tilt at the surface will be

$$\theta = (60) \frac{100}{179} \cdot \frac{(0.8 \times 10^5)}{(1.4 \times 10^5)} = 20 \ \mu\text{rad} \qquad (12)$$

The maximum tilt occurs at a distance 120 m $\left(\frac{2000}{212}\right)$ = 1130 m

<u>Maximum tilt for spherically shaped pressure source</u>

From (11), tilt very near source is

$$\theta = .57 \left(\frac{100}{1.4 \times 10^5}\right) = 4 \times 10^{-4} = 400 \ \mu\text{rad}.$$

To find tilt near the surface, assume diameter of sphere is equal to thickness of formation (230 m). From (8)

$$\theta = .65 \left(\frac{230}{2000}\right)^3 \left(\frac{100}{1.4 \times 10^5}\right) \frac{1}{8}$$

$$= 0.1 \times 10^{-6} = 0.1 \ \mu\text{rad}$$

Tilt at a depth of 1000m. θ will vary approximately as $(\frac{z}{h})^3$, so

$$\theta = 400 \left(\frac{1}{2}\right)^3 = 50 \ \mu\text{rad}.$$

Locus of Maximum tilt

As shown in Figure 17, the locus of maximum tilt at the surface does not appear to be very sensitive to the configuration of the source. For all sources considered here, the maximum occurs at a radial distance from the well roughly equal to half this depth of the source. However, except for the case of the spherical source discussed above, we do not know how the locus of maximum tilt varies with depth.

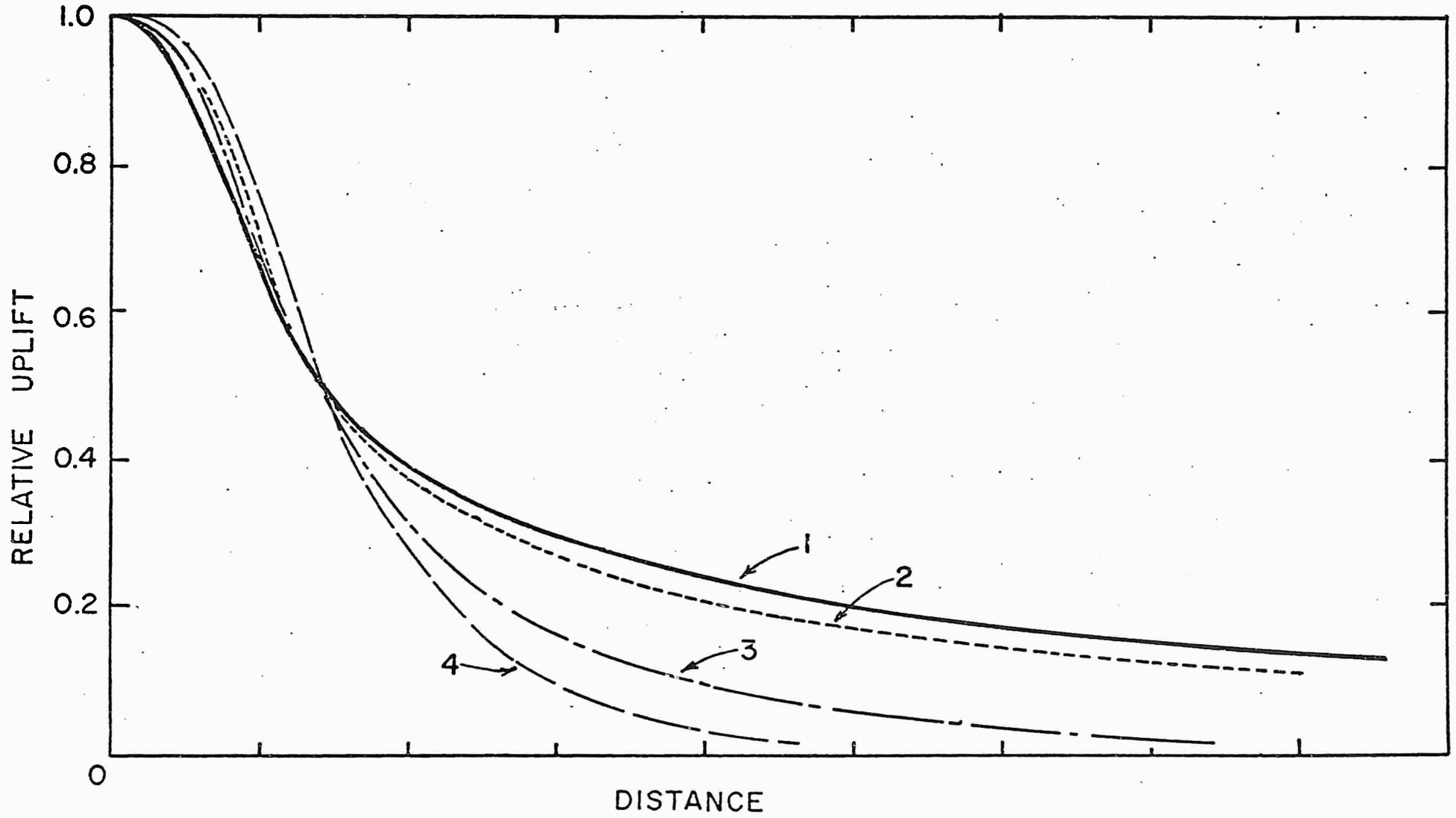

FIGURE 17 VERTICAL DISPLACEMENTS FOR FOUR SOURCES OF STRAIN
(1. line source, 2. Mogi's two-point source,
3. point source, and 4. circular crack source.)

VIII. REFERENCES

Eaton, J. P., Bull. Seis. Soc. of America, 49, 301-316, 1959.

Fiske, R. S. and W. T. Kinoshita, Science, 165, 341-49, 1969.

Mogi Kiyoo, Bull, Earthquake Res. Inst. Tokyo Univ., 36, 99-134, 1958.

Rikitake, T., Earth-Sci. Rev., 4, 245, 1968.

Simon, I., A. G. Emslie, P. F. Strong and R. K. McConnell, Jr., Rev. Sci, Inst., 39, 1666-1671, 1968.

Sun, Ren Jen, J. Geophys. Res., 74, 4407-4422, 1970

Walsh, J. B., and R. W. Decker, J. Geophys. Res., 3291-3302, 1971.

Wood, M. D., and R. V. Allen, Science News, 99, 8, Jan. 1971.

Yamakawa, Norio, Zisin, (Jour. Seis. Soc. Japan)[ii], 8, 84-98, 1955.