AD 729870

AD

# USAAMRDL TECHNICAL REPORT 71-35

# STUDY TO DETERMINE THE APPLICATION OF AIRCRAFT IGNITION-SOURCE CONTROL SYSTEMS TO FUTURE ARMY AIRCRAFT

By

John K. Drummond

D D C
SEP 22 1971

June 1971

EUSTIS DIRECTORATE
U. S. ARMY AIR MOBILITY RESEARCH AND DEVELOPMENT LABORATORY
FORT EUSTIS, VIRGINIA

CONTRACT DAAJ02-69-C-0030
DYNAMIC SCIENCE (THE AvSER FACILITY)
A DIVISION OF MARSHALL INDUSTRIES
PHOENIX, ARIZONA

Approved for public release;
distribution unlimited.

Reproduced by
NATIONAL TECHNICAL
INFORMATION SERVICE
Springfield, Va. 22151

55

Unclassified

Security Classification

**DOCUMENT CONTROL DATA - R & D**

*(Security classification of title, body of abstract and indexing annotation must be entered when the overall report is classified)*

| | |
|---|---|
| 1. ORIGINATING ACTIVITY (Corporate author)<br>Dynamic Science (The AvSER Facility)<br>A Division of Marshall Industries<br>Phoenix, Arizona | 2a. REPORT SECURITY CLASSIFICATION<br>Unclassified<br>2b. GROUP |

3. REPORT TITLE

STUDY TO DETERMINE THE APPLICATION OF AIRCRAFT IGNITION-SOURCE CONTROL SYSTEMS TO FUTURE ARMY AIRCRAFT

4. DESCRIPTIVE NOTES (Type of report and inclusive dates)

Final Report

5. AUTHOR(S) (First name, middle initial, last name)

John K. Drummond

| | | |
|---|---|---|
| 6. REPORT DATE<br>June 1971 | 7a. TOTAL NO. OF PAGES<br>54 | 7b. NO. OF REFS<br>19 |
| 8a. CONTRACT OR GRANT NO.<br>DAAJ02-69-C-0030<br>b. PROJECT NO.<br>1F162203A529<br>c.<br>d. | 9a. ORIGINATOR'S REPORT NUMBER(S)<br>USAAMRDL Technical Report 71-35<br>9b. OTHER REPORT NO(S) (Any other numbers that may be assigned this report)<br>Dynamic Science 4200-17-10 | |

10. DISTRIBUTION STATEMENT

Approved for public release; distribution unlimited.

| | |
|---|---|
| 11. SUPPLEMENTARY NOTES<br>None | 12. SPONSORING MILITARY ACTIVITY<br>Eustis Directorate, U. S. Army Air Mobility Research and Development Laboratory, Fort Eustus, Virginia |

13. ABSTRACT

This report presents the results of a program that was conducted to provide design information applicable to future Army aircraft relative to crash sensors, ignition-source suppression systems, and circuitry for the automatic activation of the suppression systems.

The program involved a comprehensive literature search, the development of requirements for the initiating subsystem of the overall ignition source control system, and the consideration and comparison of several illustrative activating circuits.

The development of a workable ignition-source suppression system was found to be feasible. Several systems have already been developed to cool hot surfaces, to inert atmospheres, and to de-energize electrical systems. The areas of the ignition-source control problem which require development are: the selection and the degree of redundancy of crash sensors, the locations of the sensors on the aircraft, and the complexity of the activating and control circuitry.

DD FORM 1 NOV 65 1473 REPLACES DD FORM 1473, 1 JAN 64, WHICH IS OBSOLETE FOR ARMY USE.

Unclassified

Security Classification

## DISCLAIMERS

The findings in this report are not to be construed as an official Department of the Army position unless so designated by other authorized documents.

When Government drawings, specifications, or other data are used for any purpose other than in connection with a definitely related Government procurement operation, the U. S. Government thereby incurs no responsibility nor any obligation whatsoever; and the fact that the Government may have formulated, furnished, or in any way supplied the said drawings, specifications, or other data is not to be regarded by implication or otherwise as in any manner licensing the holder or any other person or corporation, or conveying any rights or permission, to manufacture, use, or sell any patented invention that may in any way be related thereto.

## DISPOSITION INSTRUCTIONS

Destroy this report when no longer needed. Do not return it to the originator.

ACCESSION for
CFSTI WHITE SECTION
DDC BUFF SECTION
UNANNOUNCED
JUSTIFICATION
BY
DISTRIBUTION/AVAILABILITY CODES
DIST. AVAIL. and/or SPECIAL
A

Unclassified
Security Classification

| 14. KEY WORDS | LINK A ROLE | LINK A WT | LINK B ROLE | LINK B WT | LINK C ROLE | LINK C WT |
|---|---|---|---|---|---|---|
| Ignition-Source Control | | | | | | |
| Hot-Surface Inerting | | | | | | |
| Electrical System Deenergizing | | | | | | |
| Postcrash Fire Control | | | | | | |

Unclassified
Security Classification

DEPARTMENT OF THE ARMY
U. S. ARMY AIR MOBILITY RESEARCH & DEVELOPMENT LABORATORY
EUSTIS DIRECTORATE
FORT EUSTIS, VIRGINIA 23604

This report was prepared by Dynamic Science (The AvSER Facility), a Division of Marshall Industries, under the terms of Contract DAAJ02-69-C-0030. The technical monitor for this program was Mr. R. E. Bywaters, of the Safety and Survivability Division, Eustis Directorate.

The purpose of this effort was to conduct a state-of-the-art survey and to investigate the feasibility of developing an ignition-source suppression system applicable to future Army aircraft as a means of reducing the incidence of postcrash fires.

The contractor's conclusions and recommendations are concurred in by this Directorate. The feasibility of incorporating such a system in Army aircraft must be confirmed through additional research and development, including a comprehensive test program to validate fail-safe reliability and operational effectiveness of an ignition suppression system. However, primary emphasis in the area of postcrash fire research should be placed on the development of improved fuel containment techniques and on the use and application of modified fuels in Army aircraft.

Project 1F162203A529
Contract DAAJ02-69-C-0030
USAAMRDL Technical Report 71-35
June 1971

# STUDY TO DETERMINE THE APPLICATION OF AIRCRAFT IGNITION-SOURCE CONTROL SYSTEMS TO FUTURE ARMY AIRCRAFT

Final Report

Dynamic Science 4200-71-10

By

John K. Drummond

Prepared by

Dynamic Science (The AvSER Facility)
A Division of Marshall Industries
Phoenix, Arizona

for

EUSTIS DIRECTORATE
U. S. ARMY AIR MOBILITY RESEARCH AND DEVELOPMENT LABORATORY
FORT EUSTIS, VIRGINIA

Approved for public release;
distribution unlimited.

## SUMMARY

This report presents the results of a program that was conducted to provide design information applicable to future Army aircraft relative to crash sensors, ignition-source suppression systems, and circuitry for the automatic activation of the suppression systems.

The program involved a comprehensive literature search, the development of requirements for the initiating subsystem of the overall ignition source control system, and the consideration and comparison of several illustrative activating circuits.

The development of a workable ignition-source suppression system was found to be feasible. Several systems have already been developed to cool hot surfaces, to inert atmospheres, and to deenergize electrical systems. The areas of the ignition-source control problem which require development are: the selection and the degree of redundancy of crash sensors, the locations of the sensors on the aircraft, and the complexity of the activating and control circuitry.

TABLE OF CONTENTS


| | Page |
|---|---|
| SUMMARY | iii |
| LIST OF ILLUSTRATIONS | vi |
| INTRODUCTION | 1 |
| IGNITION-SOURCE DEFINITION | 3 |
| Electrical System | 3 |
| Engine Flames | 4 |
| Engine Hot Surfaces | 4 |
| Heaters | 9 |
| Sparks | 9 |
| IGNITION-SOURCE SUPPRESSION | 11 |
| Electrical System | 11 |
| Hot-Surface Cooling and Engine Inerting | 14 |
| Heaters and Sparks | 19 |
| SUPPRESSION INITIATING SYSTEM REQUIREMENTS | 25 |
| System Requirements | 25 |
| Acceptance Considerations | 26 |
| CRASH SENSORS | 27 |
| Switches | 27 |
| Sensor Requirements | 36 |
| Inertia Switch Tests | 37 |
| ACTIVATING CIRCUITRY | 38 |
| EVALUATION OF SYSTEMS | 43 |
| CONCLUSIONS AND RECOMMENDATIONS | 44 |
| LITERATURE CITED | 45 |
| DISTRIBUTION | 47 |

## LIST OF ILLUSTRATIONS


| Figure | | Page |
|---|---|---|
| 1 | Ignition Characteristics of JP-4 Fuel; Ignition Temperature Versus Contact Time (Taken From Reference 4) | 6 |
| 2 | Ignition Characteristics of Kerosene and 115/145 and 100/130 Aviation Gasolines; Ignition Temperature Versus Contact Time (Taken From Reference 4) | 7 |
| 3 | Hot-Metal Ignition Sources Found in Turbojet Engine | 8 |
| 4 | Drip Fence Installation Making Use of Existing Structural Members | 12 |
| 5 | Schematic Diagram of Ignition-Source Inerting System | 15 |
| 6 | Water-Spray System of Ignition-Source Inerting System | 16 |
| 7 | Schematic Diagram of Turbine-Cooling System (Reference 4) | 18 |
| 8 | Crash Fire Protection System for J57 Turbojet Engine | 20 |
| 9 | Cooling and Inerting System Using $H_2O$ and $N_2$ (Reference 8) | 21 |
| 10 | Schematic Diagram Showing Fuel Shutoff and Drain System in J57 Engine Crash-Fire Protection System | 22 |
| 11 | Combustion Heater Cooling System | 23 |
| 12 | Cable-Type Deformation Switch Schematic (Reference 3) | 28 |
| 13 | Installation of Cable-Type Deformation Switch (Reference 3) | 29 |
| 14 | Landing Gear Application of Deformation Switch (Reference 3) | 31 |

| Figure | | Page |
|---|---|---|
| 15 | Switch Installed Between Engine Mounting Ring and Engine to Detect Engine Breakout (Reference 3) | 32 |
| 16 | Mass-Magnet Inertia Switch | 33 |
| 17 | Low-Friction Rolamite Inertia Switch | 34 |
| 18 | Inertia Switch Applied as Battery Deenergizer | 36 |
| 19 | NACA Proposed Activating Circuit for Twin Reciprocating Engine Aircraft (Reference 3) | 39 |
| 20 | Prototype Activating System Used on C-119F Airplane (Reference 15) | 41 |
| 21 | Potential Activating Circuitry for Single-Engine Aircraft | 42 |

BLANK PAGE

## INTRODUCTION

The engineering application of crashworthiness concepts in the design of aircraft structures, seats, and restraint systems has shown that the severity of the crash pulse which is transmitted to the occupant can be reduced, and that the magnitude of the reduction enables many crashes to be reclassified as survivable. The actual survivability of a crash is therefore often determined by whether or not a fire ensues. A crash fire may result in occupant injuries or fatalities due to burns, or in asphyxiation.

The need for minimizing the occurrence of postcrash fires and the resulting loss of life and property has been recognized for many years. The United States Army Air Corps conducted a full-scale crash fire study using single-engine aircraft as early as 1924.[1] Beginning in 1949 and extending through 1958, comprehensive investigations were conducted by NACA/NASA at the Lewis Flight Propulsion Laboratory to determine the causes and development of fires in both reciprocating engine and turbojet aircraft.[1,2,3,4,5] An investigation of the design requirements for supersonic transport crash fire prevention in terms of ignition sources, inerting systems, etc., was completed and documented in 1963.[6] In 1970, the Department of Transportation supported an investigation of automotive crash fires and means of preventing the electrical system from acting as the ignition source.[7]

As part of an effort to reduce the loss of personnel and property, the United States Army has sponsored a crash-fire research and development program at the AvSER Facility of Dynamic Science for the past 8 years. The products of this research and development program have included: a crash fire inerting system for reciprocating engine helicopters;[8] postcrash fire design criteria which have been included in a Crash Survival Design Guide;[9] and state-of-the-art evaluations of emulsified fuels, fuel containment methods, and, the subject of this report, ignition-source control design criteria.

This report presents the results of a program which was conducted to provide design information relative to crash sensors, activating circuitry, and ignition-source suppression systems. The program involved a literature search, an operational requirement study, and the generation of conceptual system designs.

- A comprehensive literature search was conducted to determine system design philosophies and devices which can be used to sense a crash, to deenergize the electrical system, or to shut down the engines.

- The operational requirements of an ignition-source control system were investigated in order to develop performance and user acceptance criteria.

- Several conceptual system designs were considered and briefly evaluated relative to the performance and user acceptance criteria. Of prime importance in the evaluations was the fail-safe aspect of each system.

## IGNITION-SOURCE DEFINITION

Fires can occur when three elements are present: a fuel, an oxidizing agent, and an ignition source. Fuel spilled from fuel tanks which have been ruptured as a result of a crash is atomized, mixed with the surrounding air, and spread by the crashed aircraft's deceleration until it is ignited by contact with an ignition source. The ignition source increases the temperature of the combustible material, in this case the aircraft's flammable fluids, to the temperature at which ignition occurs. Flammable fluids will ignite throughout a wide range of environmental and ignition-source conditions. Generally, ignition of spilled combustibles during the crash occurs as a result of the presence of one or more of the following sources: electrical system, engine flames and/or hot surfaces, heaters, or sparks.

### ELECTRICAL SYSTEM

The electrical wiring in an aircraft is a particularly widespread potential ignition source. It is extensively distributed throughout the aircraft to connect electrical components to one another. Combustible fluids can be ignited when exposed wires provide electric arcs between the wires and grounded aircraft surfaces. Wires can become exposed as a result of being severed during the crash or as a result of abrasion of insulation by impinging aircraft structure. A significant aspect of an electrical discharge ignition source is the large amount of energy present relative to the amount actually required to produce ignition under ideal conditions. Ignition can also result when flammable fluids come into contact with wires that have been heated either as a result of short circuiting or by intent, e.g., an incandescent light filament. Incandescent lights are normally used during night flights, and some landing light filaments will sustain temperatures high enough to cause fuel ignition for 0.75 to 1.5 seconds after the light bulb is smashed and the filament broken.[1]

Electrical components which store or generate power are also potential ignition sources. Batteries can maintain an output capacity for hours after a crash, and structural impingement upon the battery terminals remains a threat for an extended period of time. Generators and inverters maintain power output as long as rotors continue to rotate and field circuits are energized. Batteries, generators, and inverters are the primary electrical components which must be taken into account in the development of an ignition-source control system.

## ENGINE FLAMES

Engine inlet and exhaust flames are responsible for the ignition of many crash fires. This ignition source exists in both reciprocating engine and turbojet aircraft.

In reciprocating engine aircraft, exhaust flames may result from the failure of spark plugs to ignite the fuel and subsequent ignition outside of the cylinder, or from failure of exhaust valves to contain burning cylinder charges. Since a crash does not necessarily stop an engine completely or de-energize the entire electrical system, flashes of exhaust flames may occur as long as the engine drive shaft is rotating and fuel is being drawn into the engine. Engine inlet flames occur as the result of a backfire of an engine cylinder charge-out through the inlet port and subsequent ignition of the induction system fuel-air mixture. Engine inlet flames may also appear for several minutes after the crash.

Turbojet engines are highly susceptible to fuel ingestion because of the long period of time required for the turbine to coast to a stop. If combustor fuel flow continues after the crash, combustor flame will persist and ingested fuel will be ignited immediately upon contact with this flame. Since the ingested fuel-air mixture enters the downstream end of the combustor, it continues to burn in the tailpipe downstream of the turbine, and exhaust flames may appear at the tailpipe exit. If the combustor fuel flow is cut off, either intentionally or as a result of the crash, the main combustor flame will be extinguished but small residual flames will result from the draining of the fuel manifold. The ignition source is still present, but the ingested fuel-air mixture would have to be richer than that required for ignition with the main combustor flame. If conditions within the engine are such that the pressure gradient is insufficient to pass the combustor gas through the turbine, the combustor flame may propagate upstream and exit at the engine inlet.

## ENGINE HOT SURFACES

Hot surfaces represent another principal engine ignition source. Even if the fuel flow has been shut off and residual flames are avoided, the hot engine metal may be a potential igniter. The temperatures of hot surfaces are largely determined by the level of engine power at the time under consideration. The high engine power required for takeoff or for the correction of a faulty landing approach will produce local temperatures which are high enough to ignite the engine fuel. Even under normal operating conditions, some local hot-surface temperatures will

be high enough to ignite the lubricating oil and/or the hydraulic fluid. Either of these ignited fluids may, in turn, act as an ignition source for the fuel itself. Since many hot surfaces will remain at elevated temperatures for several minutes after a crash, the probability of flammable fluid ignition as a result of contact with these surfaces is high. In an NACA full-scale crash of a reciprocating engine aircraft,[1] the temperature history of the exhaust disposal system indicated that it took 30 seconds for the hottest portions of the exhaust collector ring to cool below the minimum fuel ignition temperature, and 84 seconds to cool below the minimum lubricating oil ignition temperature. In later NACA work with turbojet aircraft,[4] temperature measurements showed that all the metal downstream of the compressor was above the ignition temperatures of jet fuels and lubricants as measured in a laboratory. The ignition potential of a hot surface is also dependent upon the length of time that the combustible fluid is in contact with the surface. The relationship between surface temperature and contact time required for ignition at various pressures is shown in Figures 1 and 2. The curves indicate that the required contact time decreases with increasing surface temperature, and that ignition is possible at lower surface temperatures for a given contact time as the pressure increases.

The primary hot-surface ignition sources in reciprocating engines are the exhaust gas disposal system and the cylinder interiors. Ignition sources in turbojet engines include the combustor and transition liners, the turbine, and the tailcone and tailpipe. A study of the gas velocity through the hot zones of the turbojet engine in the main gas stream showed that combustibles pass through these zones too rapidly to ignite during the most likely period of fuel ingestion.[4] The study was conducted on engines that are in the size category of the turbojet engines presently in use on rotary-wing aircraft; the results of the study are therefore applicable. Although ignition probably will not occur in the main gas stream, a portion of the engine gas flow is diverted to hot zones in the engine where sufficient contact time for ignition exists. A brief description of three such turbojet hot-surface ignition sources follows. These sources are indicated in the schematic of a generalized turbojet engine shown in Figure 3.

1. Combustor liner: The metal adjacent to the dome of the combustor liner is heated by the combustor flame and is a prime ignition source. The residual flames previously discussed in conjunction with the hot surfaces make this section of the engine particularly hazardous.

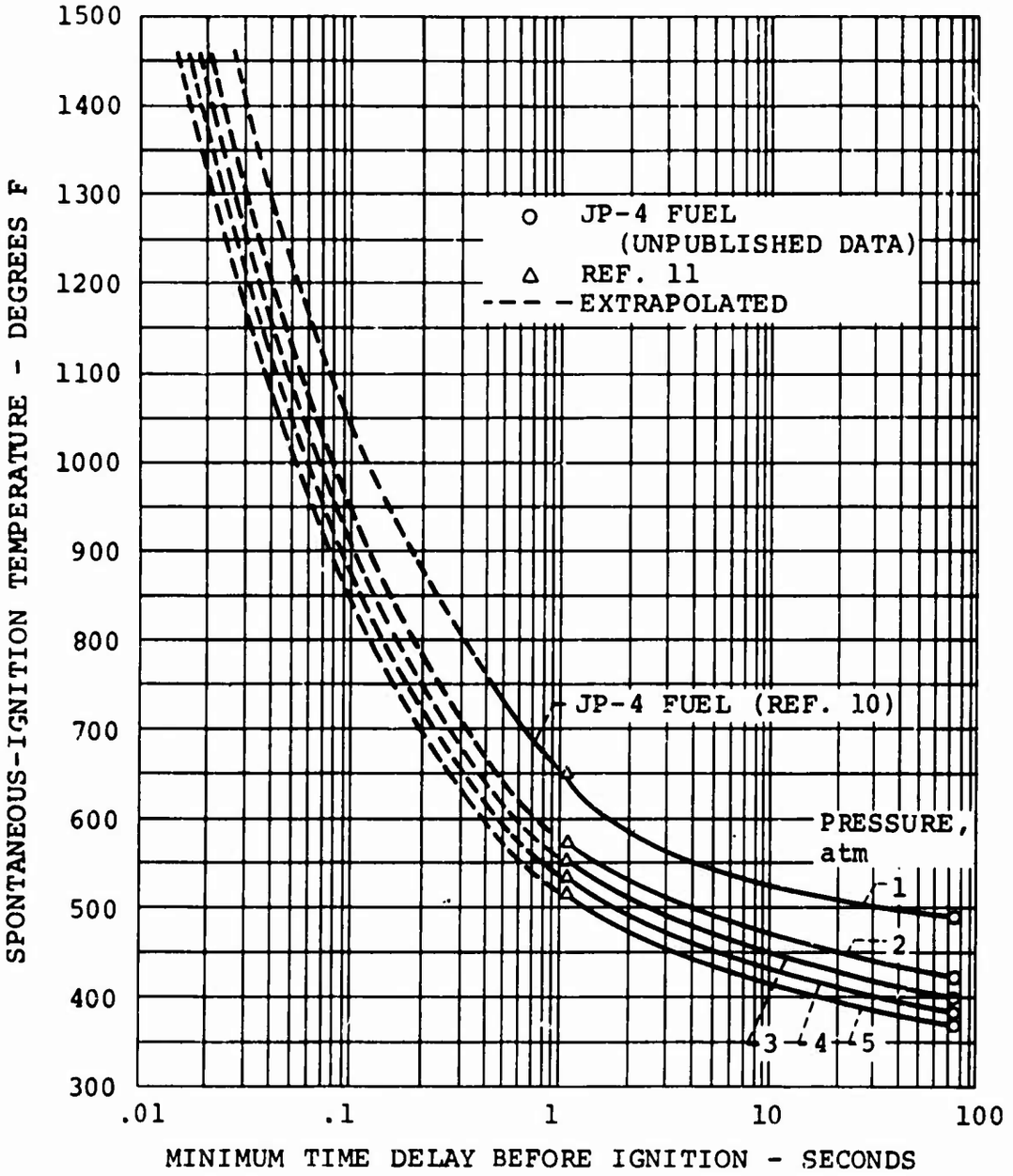


Figure 1. Ignition Characteristics of JP-4 Fuel; Ignition Temperature Versus Contact Time (Taken From Reference 4).

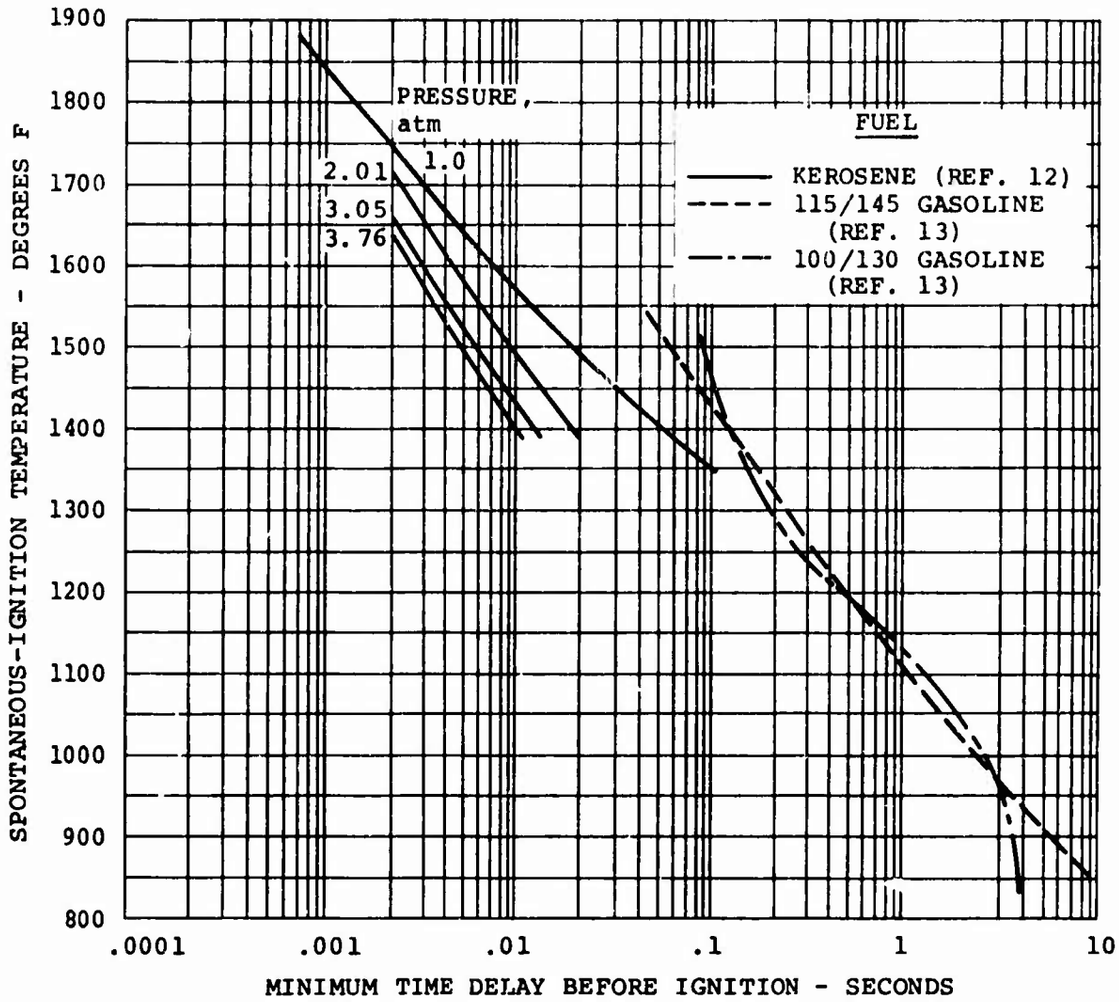


Figure 2. Ignition Characteristics of Kerosene and 115/145 and 100/130 Aviation Gasolines; Ignition Temperature Versus Contact Time (Taken From Reference 4).

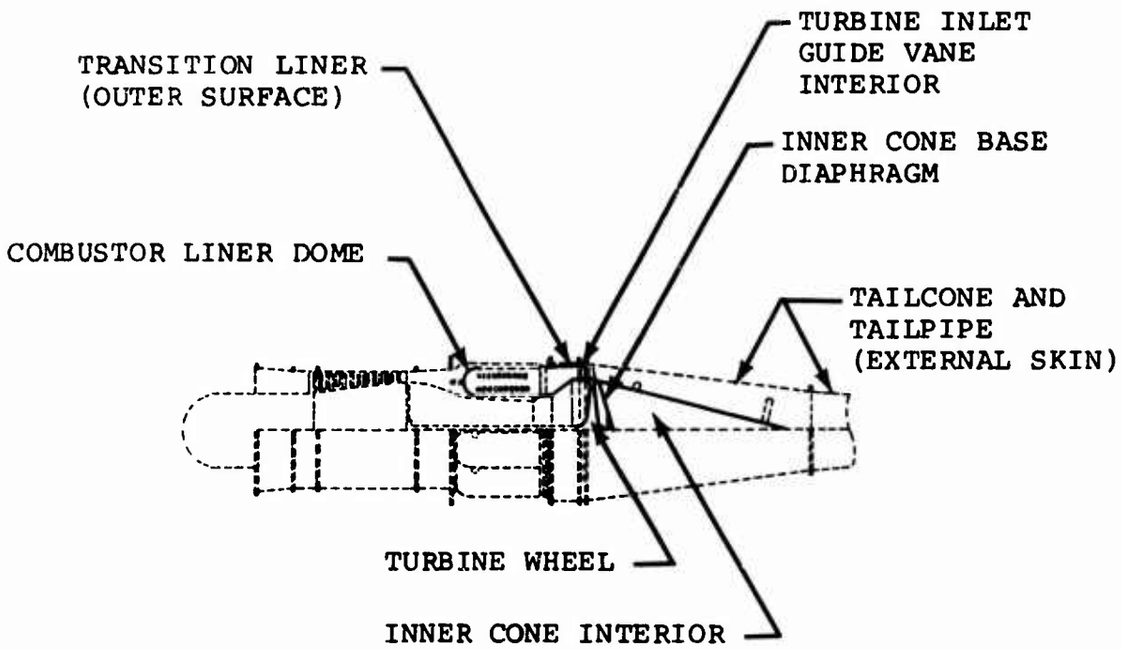


Figure 3. Hot-Metal Ignition Sources Found in Turbojet Engine.

2. Transition liner: A small quantity of air flows continuously from the combustor over the outer surface of the transition liner which joins the combustor to the turbine. The transition liner temperature may be high enough to ignite an ingested fuel-air mixture.

3. Turbine: The gas velocity in the region of the turbine wheel is low enough to effect sufficient hot-surface contact time for ignition to occur.

The hot-surface ignition of a flammable fluid is dependent upon the environmental conditions and the characteristics of both the fluid and the hot surface, including temperatures and thermal properties. The temperatures within a body and on the body's surface are, in turn, dependent upon the mass of the body when transient conditions must be considered. Still another factor which affects the probability of hot-surface ignition is the ratio of fuel to air.

## HEATERS

The heating-defrosting systems that are provided in the cockpit and passenger compartment areas of an aircraft are of a combustion type and/or a type that uses bleed air from the engine.

Bleed air heaters normally use air from the compressor section of a turbojet engine. Since the hot-surface ignition sources of these engines begin at the combustor liner, which is downstream of the compressor, the piping system which carries the bleed air to a mixing chamber should not produce hot-surface ignition sources. A temperature survey of the bleed air heating system should be made to confirm the nonexistence of ignition sources.

Combustion-type heaters are found in reciprocating engine aircraft and, as in the case of U. S. Army turboshaft rotary aircraft, are often used as auxiliary heating systems when cold weather operation is anticipated. These systems generate heat by the induction and ignition of fuel in the heater's combustion chamber. It follows that some of the heater surfaces will reach temperatures which require that they be treated as potential ignition sources. As a secondary effect, the combustion-type heaters require the routing of additional fuel lines from the fuel tanks to the heaters, and therefore increase the probability of fuel line breakage during a crash.

## SPARKS

Two types of sparks that should be considered as potential ignition sources are friction sparks and electrostatic sparks. The hot surfaces of friction sparks, which are abraded from a parent material through motion relative to another surface, may contact and ignite combustible fluids which have been spilled as a result of a crash. The parent material that is being abraded may also have temperatures high enough to ignite combustible fluids that it contacts. Electrostatic sparks result from the discharge of electrostatic charge which accumulates on parts during either normal operation or the crash. The discharge is triggered during the crash when the parts are separated from the aircraft due to crash forces.

### Friction Sparks

The probability that a friction spark will ignite a combustible fuel-air mixture depends on the characteristics of the fuel and the thermal energy of the spark. A differentiation may be made between sparks that ignite in the air and those that do not.

Sparks that ignite provide ignition sources whose temperatures are considerably higher than those of the abraded particles that depend solely on friction heat. In general, materials that produce ignitible sparks do so at lower bearing pressures than are required to abrade the materials that produce the non-ignitible friction spark. Additional NACA research[14] established that aluminum would not be an ignition source, whereas magnesium, chrome-molybdenum, stainless steel, and titanium alloys all ignited fuel mists.

Electrostatic Sparks

Electrostatic discharge from a wheel strut to the ground caused ignition of a fuel mist and, ultimately, the destruction of an aircraft being tested by NACA.[1] Atmospheric and environmental conditions largely determine the probability of occurrence of this phenomenon, but it is a proven potential ignition source and must be treated as one.

## IGNITION-SOURCE SUPPRESSION

### ELECTRICAL SYSTEM

The ignition potential of an aircraft's electrical system may be reduced by controlling the location and the environment of electrical components, by disconnecting electrical generation and storage components from nonessential circuits, and by de-energizing the generating components. Both passive and active approaches should be used to eliminate the electrical system as an ignition source.

Electrical components should be located judiciously within the aircraft. In normal aircraft attitudes, the components should be located so that they are above and away from flammable fluid sources. In abnormal attitudes, such as those which might result from a crash, leaking flammable fluid should not be able to contact electrical equipment or wiring. Consideration should be given to the use of baffles, flow diverters or drip fences, and electrically nonconductive, flexible shielding material for wires and for paneling the compartments in which electrical components are located. One type of drip fence that might be used within component compartments is shown in Figure 4. In effect, the addition of drain holes on both sides of structural members such as stringers enables those members to act as drip fences.

Electrical components should also be located in areas where the anticipated crash loadings will be minimal and where the deformations of proximate structure will not result in structural impingement on either the components or their wiring. The compartments in which electrical components are located should be lined with electrically nonconductive shielding material in order to minimize the possibility of arcing from components to structure.

The active approach to eliminating the electrical system as an ignition source involves the deenergization and disconnection of batteries, generators, inverters, and any other generating and storage components that may be aboard the aircraft. The inerting of the electrical system should be accomplished with speed. Table I[1] presents a comprehensive tabulation of the times after crash at which ignitions were observed in earlier NACA tests. The tests were conducted on reciprocating engine aircraft, but the results are generally applicable to turbojet aircraft as well.[4] Arcing of the electrical system caused ignition 1.0 second after a crash, illustrating the speed with which the electrical system should be inerted.

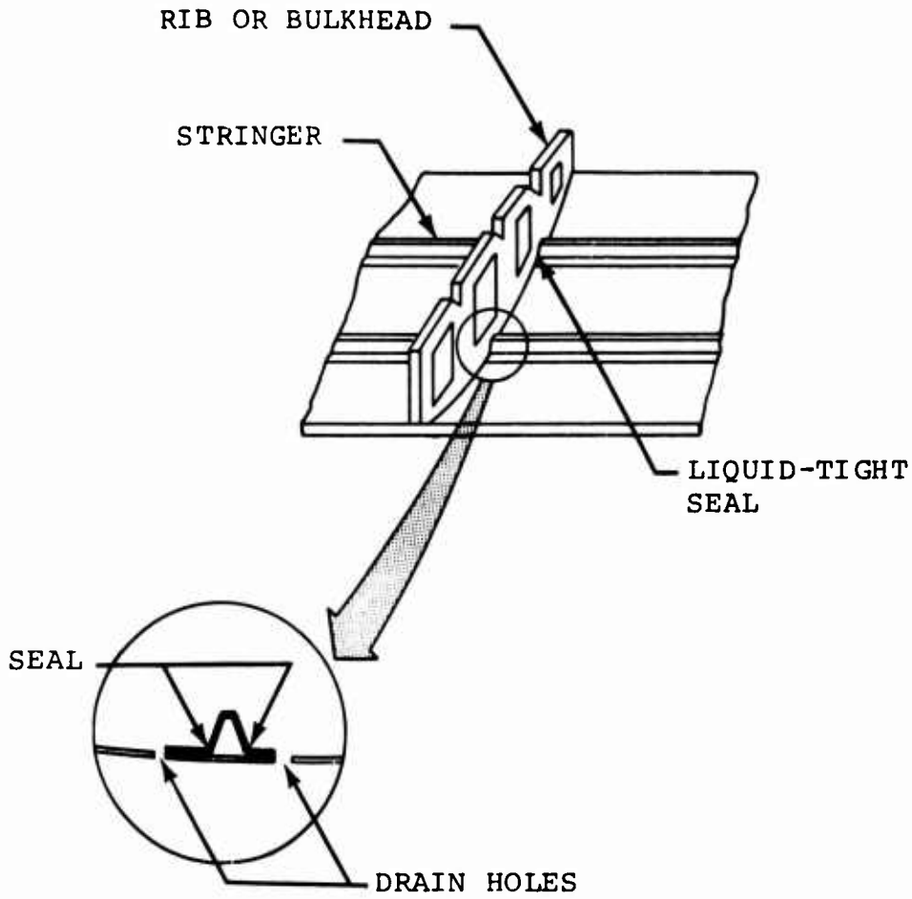


Figure 4. Drip Fence Installation Making Use of Existing Structural Members.

Relays have been used successfully to inert an aircraft electrical system.[15] Ideally, the contacts of the relays should be connected to satisfactorily accomplish each of the following:

1. Generators and batteries should be disconnected from all circuits that are not required by the inerting systems.

2. Additional circuits that are required by the inerting systems should be connected to a power source.

3. Disconnected circuits should be connected to ground in order to bring residual electric potentials to zero quickly.

TABLE I. TIME AFTER CRASH AT WHICH IGNITION WAS OBSERVED FOR VARIOUS IGNITION SOURCES (REFERENCE 1)

| Ignition Source | Time After Crash Impact Ignitions Observed (sec) |
|---|---|
| Hot Surfaces: | |
| Exhaust System | 1.3 |
| | .7 |
| | 1.9 |
| | 3.8 |
| Heat Exchanger | 12.1 |
| Exhaust Flame: | |
| Torching | 4.1 |
| | 1.3 |
| | 2.0 |
| | 3.5 |
| | 1.9 |
| Exhaust Gases | .1 |
| Electrical System: | |
| Arcs | 1.0 |
| Filaments | .6 |
| | .6 |
| Induction-System Flames | 2.2 |
| | 3.5 |
| | 7.7 |
| Chemical Agents | 4.4 |
| | 3.5 |
| | 3.5 |
| Electrostatic Sparks | 2.4 |

4. Power should be supplied to a time delay mechanism that will result in the timely disconnection of all inerting system circuits. This action completes the disconnection of all circuitry from the generating and storage components.

The primary components that should be disconnected from circuitry are the batteries, generators, and inverters. Since a battery can remain a potential ignition source for an extended period of time after a crash, severed wires that connect to a battery should be prevented from contacting the aircraft structure. The wires should be short, and/or electrically nonconductive shielding should be provided to act as a buffer between the severed wires and the structure. Work done by Dynamic Science[8] showed that the inverter of the H-21 helicopter that was tested at AvSER maintained an output for .385 second after the inverter field circuit had been deenergized. It was concluded that in order to eliminate the ignition potential of generators and inverters, they should be disconnected from circuitry on their output sides as well as have their field circuits opened. Consideration should also be given to grounding the armatures of components such as generators. In this way, the armatures will be brought to a stop and the generation of output voltages will cease.

## HOT-SURFACE COOLING AND ENGINE INERTING

Hot surfaces should be cooled to temperatures which will preclude the ignition of contacted flammable fluids. The coolant should also perform the function of surrounding the hot surfaces with an inert atmosphere that will not support combustion. The cooling and inerting systems that have been successful in the past have provided:

1. A high-discharge-rate spray upon all hot surfaces to obtain rapid cooling initially.

2. Low-discharge-rate sprays over the surfaces of more massive components to provide a longer period of cooling and inerting.

3. A follow-up inerting-agent spray in selected regions if required by the engine configuration.

Spray times and coolant quantity requirements will depend on the engine design. A temperature survey and knowledge of cooling rate characteristics for the engine under consideration are required in order to design an adequate cooling and inerting system. Several successful systems have been designed and

tested on military aircraft; a brief discussion of some of these systems follows.

Contemporary study of the ignition-source control problem begins with the classical NACA/NASA work that was started in 1949 and extended into 1953.[1] Full-scale reciprocating engine aircraft crashes were made in order to investigate the mechanism of the start and development of aircraft crash fires. The cooling and inerting system that was developed as a result of this investigation is shown in two views in Figures 5 and 6. The main components of the system are:

1. A solenoid-operated fuel shutoff valve to prevent the generation of flames issuing from the engine inlet, tailpipe, and other elements of a disrupted exhaust disposal system.

2. A fire-extinguishing agent to inert the engine induction system fuel that is present and flowing through the engine before the fuel shutoff valve closes completely.

3. A system of water sprays distributed to give a simultaneous uniform coverage of the hot metal surfaces of the exhaust disposal system and the associated tailpipe heat exchanger. The water spray cooled the hot metal to temperatures that were safe from an ignition standpoint, and also provided a protective blanket of inerting steam. Fire did not result in the crashes of five aircraft that were equipped with this cooling and inerting system.

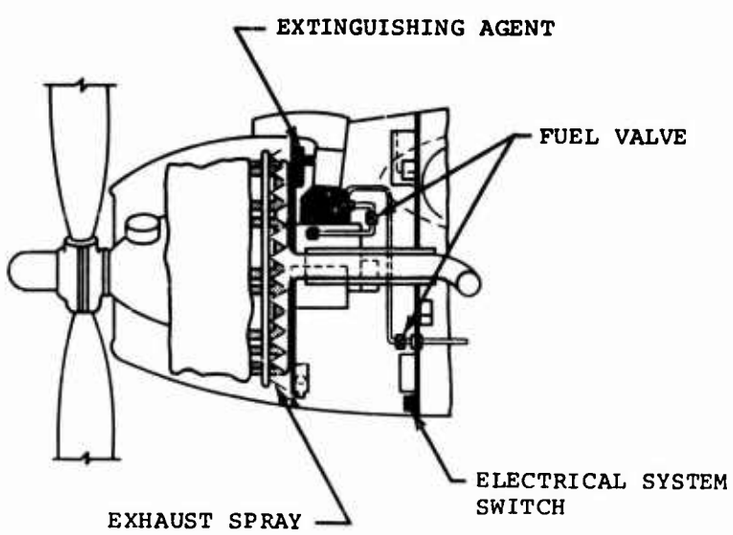


Figure 5. Schematic Diagram of Ignition-Source Inerting System.

SCHEMATIC OF NACELLE INSTALLATION

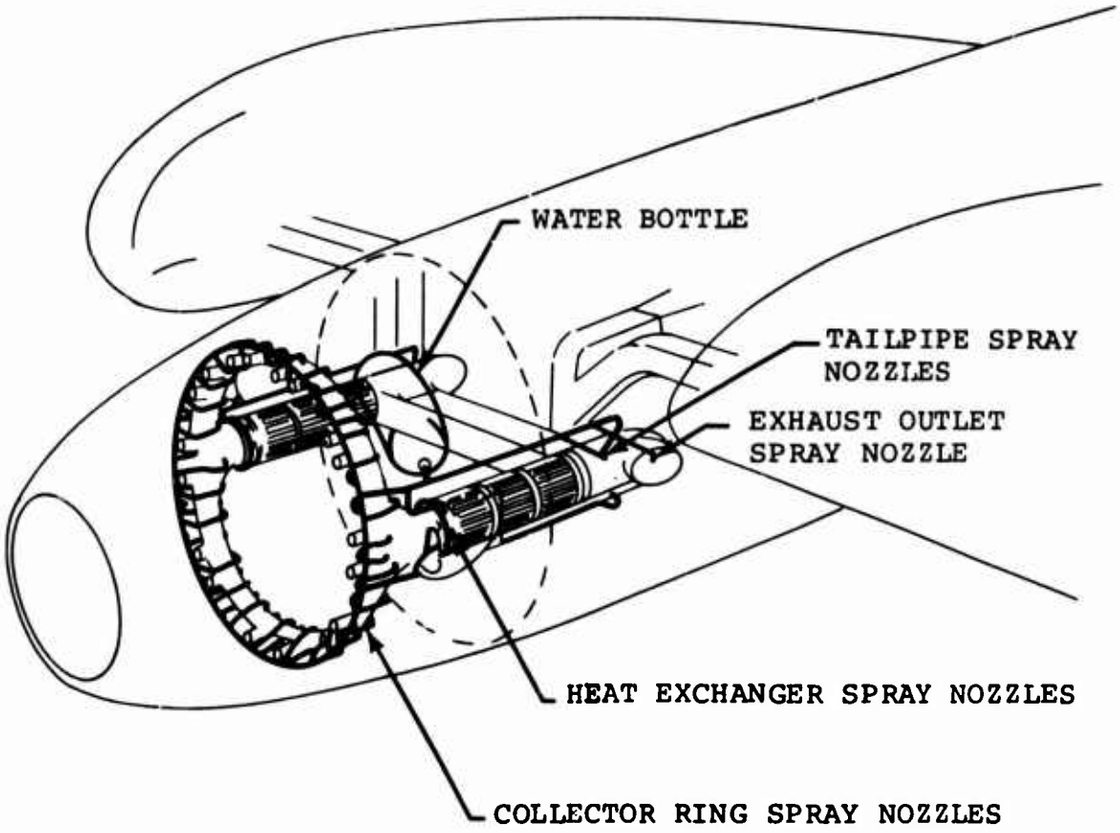


Figure 6. Water-Spray System of Ignition-Source Inerting System.

The NACA/NASA research was extended to include the development of a cooling and inerting system for turbojet engines.[4] The ignition zones that were inerted included the combustor dome, the transition liner, the turbine, the inner cone, and the tailcone and tailpipe. The quantities of coolant and the duration of coolant flow that were required for three turbojet engines are given in Table II.

A portion of the overall system is shown in Figure 7. Several streams of water issue from a ring-type manifold at the hub and spread centrifugally over the rotating wheel. For the two engines with an inner-cone base diaphragm, additional water was discharged on the downstream face of the turbine wheel through the turbine cooling air tube. A portion of this water rebounded and sprayed onto the base diaphragm.

TABLE II. WATER QUANTITIES USED FOR INERTING ENGINE COMPONENTS (REFERENCE 4)

| Internal Engine Components | Engine | | | | | |
|---|---|---|---|---|---|---|
| | J30 | | J35 | | J47 | |
| | Water Quantity (gal) | Duration Of Flow (sec) | Water Quantity (gal) | Duration Of Flow (sec) | Water Quantity (gal) | Duration Of Flow (sec) |
| Combustion domes | 0.25 | 0.5-1.8 | 3 | 3 | 3 | 3 |
| Transition, liners and hollow turbine inlet guide vanes | 0.03 | 0.5-1.8 | 1 | 14 | 1 | 14 |
| Turbine wheel and inner-cone base diaphragm: | | | | | | |
| Rapid flow | None | None | 1 | 5 | 1 | 5 |
| Slow flow | 0.89 | 2.5 | 2 | 30 | 2 | 30 |
| Inner-cone interior | 0.2 | 2.5 | 0.35 | 39 | None | None |

| External Engine Components | Engine (Airplane Installation) | | | | | |
|---|---|---|---|---|---|---|
| | J30 | | J35 (F-84) | | J47 Pylon Installation (C-82) | |
| | Water Quantity (gal) | Duration Of Flow (sec) | Water Quantity (gal) | Duration Of Flow (sec) | Water Quantity (gal) | Duration Of Flow (sec) |
| Tailcone and tailpipe | 0.7 | 6 | a 2<br>b 2.5 | a 7<br>b 3.6 | 2 | 5 |
| Total water required, gallons | 2.07 | - | 11.85 | - | 9 | - |

a Tailcone
b Tailpipe

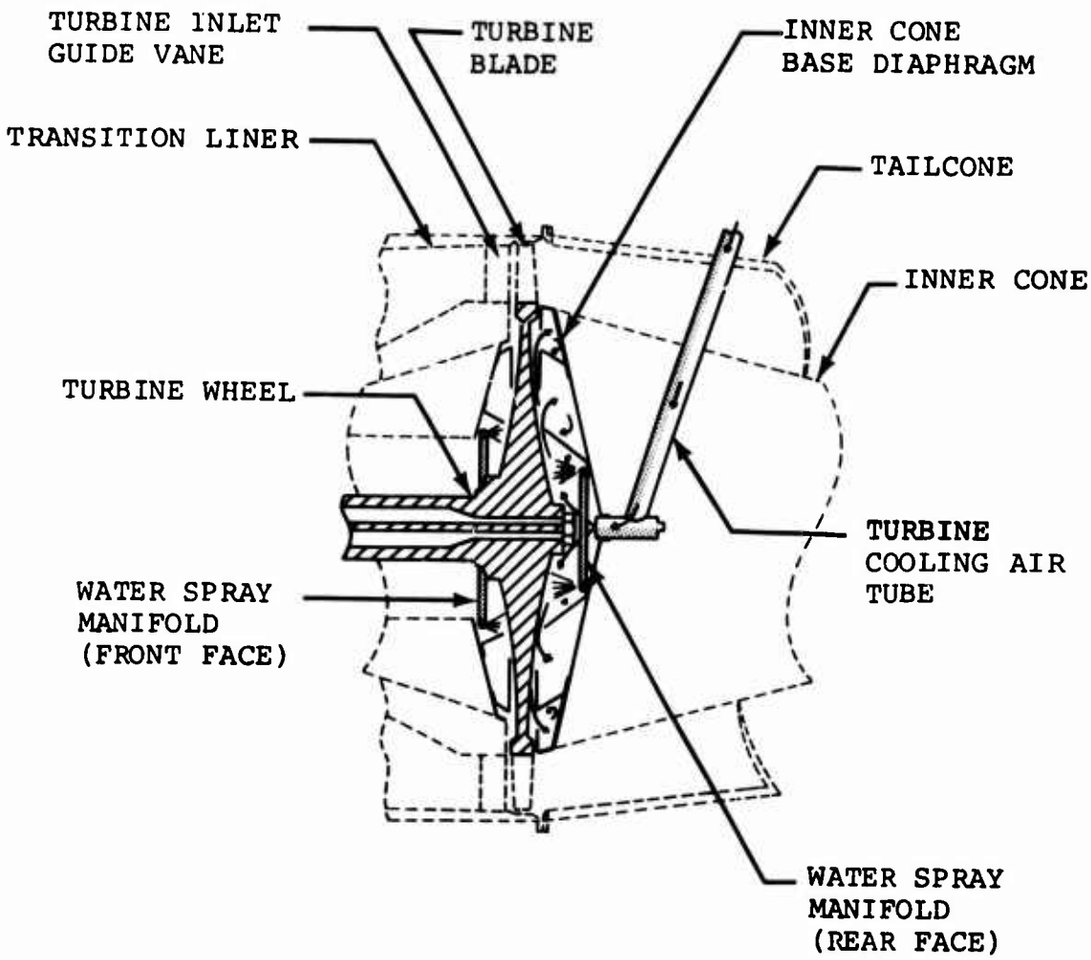


Figure 7. Schematic Diagram of Turbine-Cooling System (Reference 4).

No fires occurred in six crashes in which the inerting system was used, while two airplanes that were crashed without this protection caught fire.

Starting with the previously mentioned NACA/NASA reciprocating engine system,[1] a cooling and inerting system was developed for the Wright R-3350 turbo-compound engines in the C-119F airplane.[15] The power recovery turbines were cooled with internal sprays in a manner analagous to that developed by the NACA/NASA in its work with turbojet aircraft.[4] The equipment was installed and flight tested in a C-119F airplane to determine if it could be depended upon not to malfunction under actual flight environmental conditions. The conclusion of the investigators was that the flight testing demonstrated the feasibility of providing airworthy and reliable crash fire prevention equipment for aircraft.

NACA/NASA continued its research with turbojet engines by developing a cooling and inerting system for a modified J57 engine.[5] This engine was more powerful than the engines which had been studied previously, and produced higher surface temperatures. It also had greater surface areas to further aggravate the ignition problem. The protection system that was developed for this engine is shown schematically in Figure 8. The 16 gallons of cooling water was determined as a requirement on the basis of a test-stand engine study.

A cooling and inerting system that was developed for use on reciprocating-engine U. S. Army helicopters is shown schematically in Figure 9.[8] The coolant selected for this system was water with gaseous nitrogen added to rapidly develop an inert atmosphere. A helicopter crash test indicated that the system operated satisfactorily. The test did result in a crash fire, but it was concluded that the ignition source was either electrical system arcs or friction sparks.

Water is a preferred coolant because of its high latent heat of vaporization, its low molecular weight and chemical stability, its availability, and its low cost. Additives can be used to protect against freezing of the water and corrosion of metallic members of the system. If the steam produced by the water in contact with hot surfaces is not adequate as an inerter, then other inerting agents, such as nitrogen or carbon dioxide, may be used as a complement. The designers of a pyrotechnic fire-extinguishing system indicate that the system performance on a weight effectiveness basis is superior to the standard nitrogen pressurized units.[16] The pyrotechnic unit operated reliably and extinguished fires created in a simulated nacelle over a -65°F to +500°F temperature range.

The inerting system which was developed as a result of the NACA/NASA research with reciprocating engines (Figure 5) included a fire-extinguishing agent to minimize engine flames as an ignition source. In a turbojet application, shown in Figure 10, the combustor flames were eliminated by providing for rapid fuel shutoff and draining of the fuel manifold. The fuel was shut off by a pneumatically operated valve that was installed in the fuel line between the engine fuel-control unit and a modified pressurizing and dump valve. Simultaneously, the manifold drain valves and the pressurizing and dump valve were opened, and the fuel manifold was vented overboard.

## HEATERS AND SPARKS

A system that was developed[15] to cool and inert the hot surfaces of a combustion heater is shown in Figure 11. Spray nozzles direct the coolant to the surfaces of the heater that

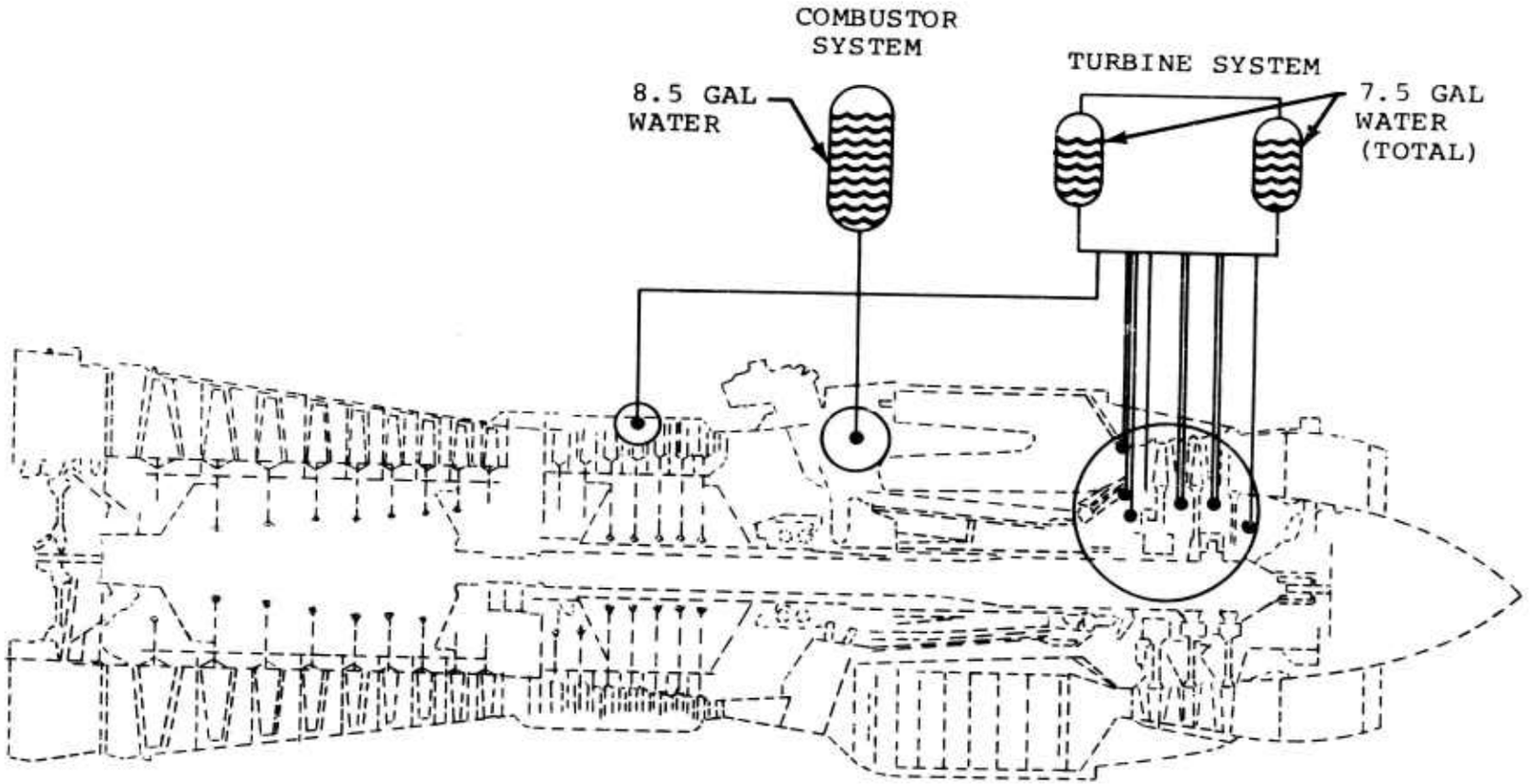


Figure 8. Crash Fire Protection System for J57 Turbojet Engine.

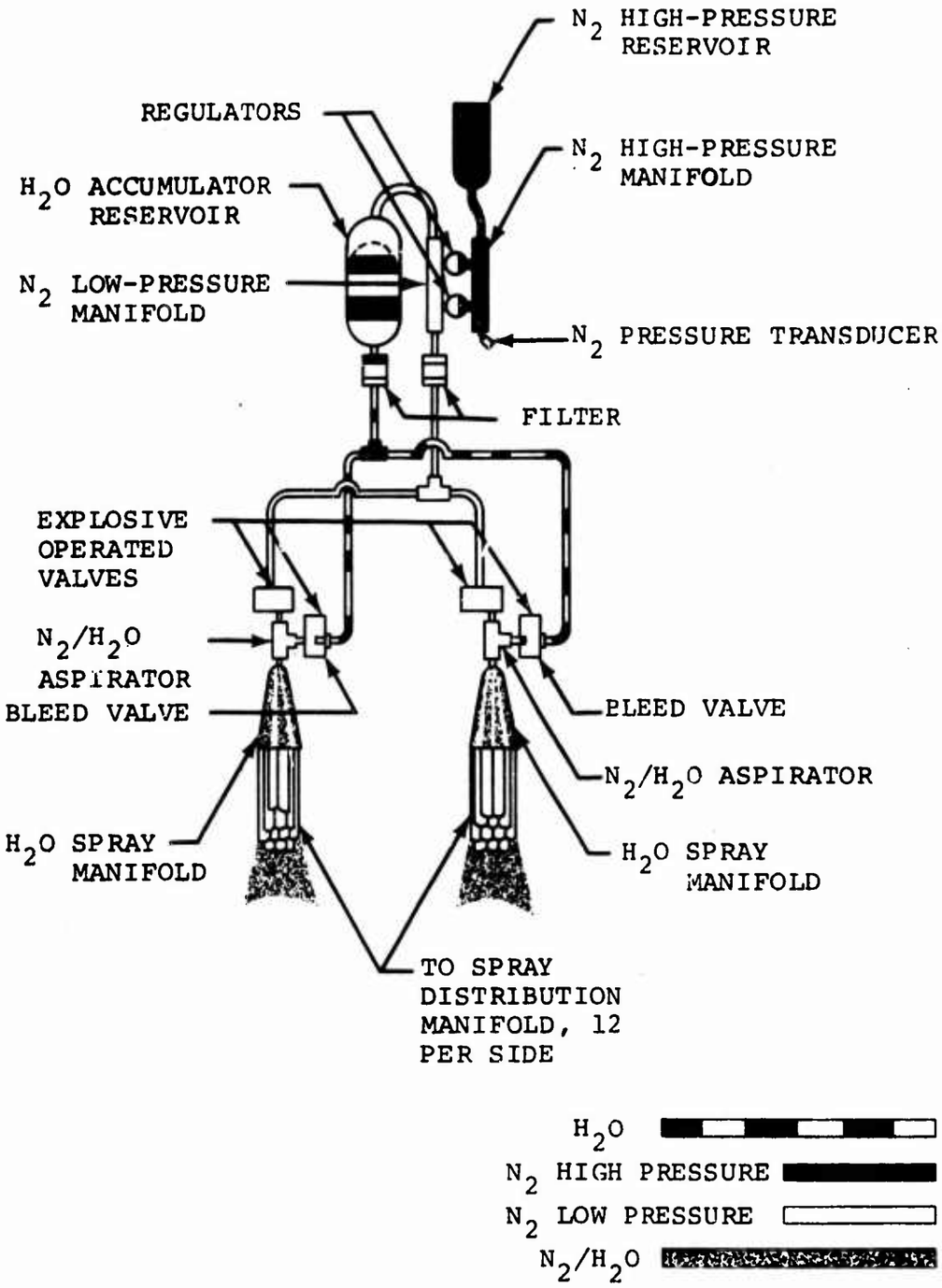


Figure 9. Cooling and Inerting System Using $H_2O$ and $N_2$ (Reference 8).

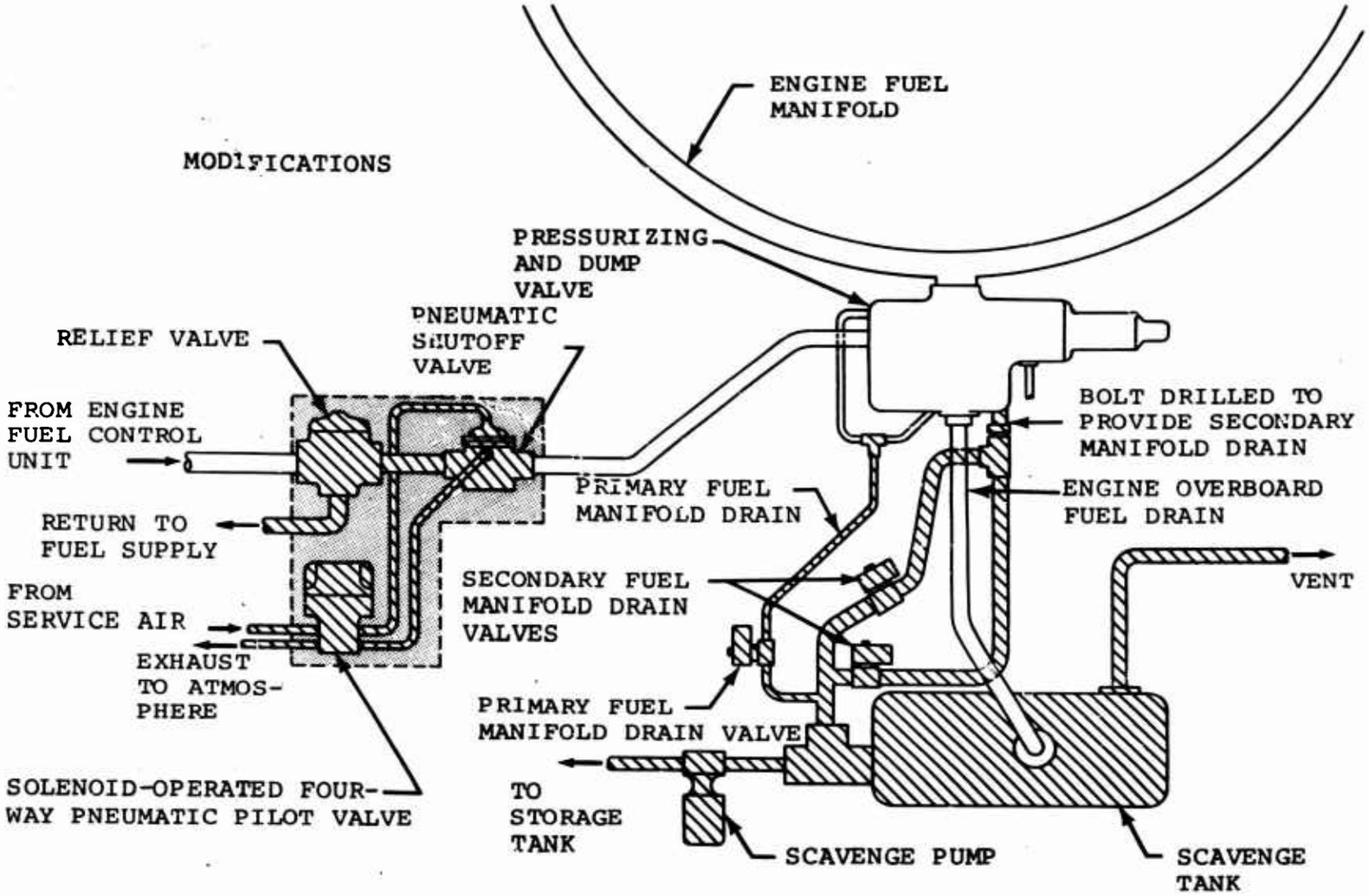


Figure 10. Schematic Diagram Showing Fuel Shutoff and Drain System in J57 Engine Crash-Fire Protection System.

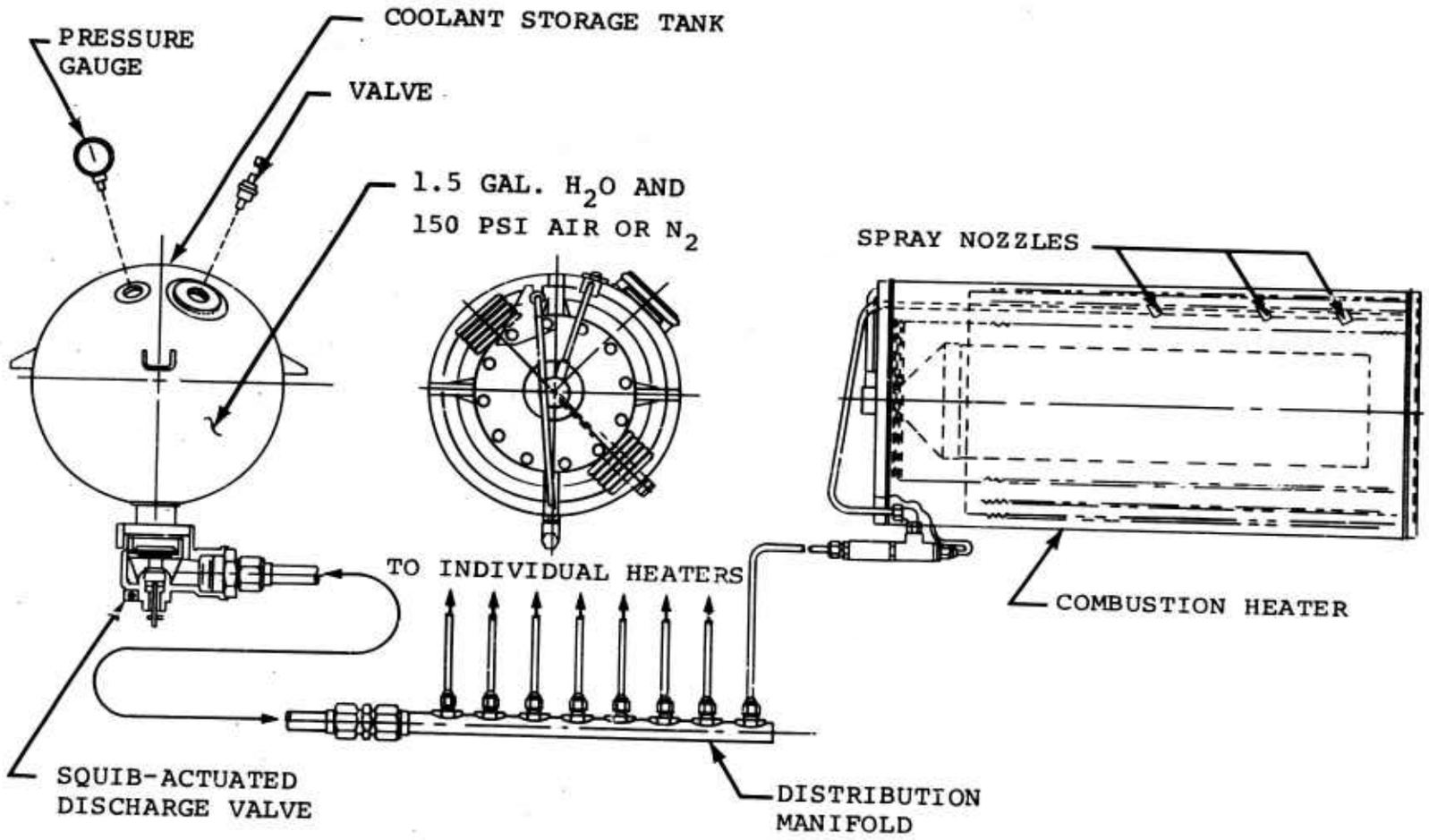


Figure 11. Combustion Heater Cooling System.

have been indicated as potential ignition sources by a thorough temperature survey. Since the vaporized coolant will enter occupied areas of the aircraft, a coolant should be chosen that will not irritate the occupants.

The friction spark ignition source can be minimized by using materials that have little or no spark-producing tendencies. Particular attention should be given to those areas of the structure where sliding contact is most likely; e.g., the aircraft belly in the event of a landing gear failure. The electrostatic spark problem is particularly difficult. The most promising solution at present is the application of coatings which negate the buildup of electrostatic charge.

## SUPPRESSION INITIATING SYSTEM REQUIREMENTS

The significant work which remains to be done in the ignition-source control field is the development of a control system that will sense a crash and activate the ignition-source suppression system.

### SYSTEM REQUIREMENTS

The initiating system must verify that the aircraft has crashed and that the resultant damage may lead to fire. It must then actuate the ignition-source suppression system. These requirements can be expanded and expressed as:

1. Unmistakenly determine that a crash has occurred and that the resultant crash damage may permit combustible fluids to contact ignition sources. The choice and locations of crash sensors and the activating circuitry are critical to the successful achievement of this requirement.

2. Be designed so that accidental actuation is not possible. Short circuits in switches or in electrical wiring or malfunctioning sensors should not initiate the suppression system.

3. Operate automatically upon receipt of coincident signals from redundant sensors. Accident statistics indicate that pilots very often do not realize that they are in trouble until it is too late, and fires can start and spread much too quickly to permit dependence upon human reaction time. The requirements for coincident signals from redundant sensors provides a fail-safe feature for the system, and is closely connected to the two preceding requirements.

4. Operate rapidly as well as automatically. It is possible for some crash events to result in a fire almost immediately; Table I shows that a fire started 0.1 second after a crash, with engine exhaust flames acting as the ignition source.

5. Be capable of manual actuation and override. It is conceivable that some crash situations may not be detectable using sensors without making the system unduly complex and sensitive. It is imperative that the pilot be able to actuate the system if he feels that the situation warrants it. He must also be able to override signals coming from sensors if the crash indication is obviously erroneous.

6. Be capable of being monitored, checked out, and reset. An indicator panel should be provided to alert the crew to the actuation of any sensing element or to any system malfunction. The sensing elements must be capable of being reset or switched out of the activating circuitry.

## ACCEPTANCE CONSIDERATIONS

The state of the art of ignition-source suppression systems is sufficiently advanced to conclude that workable systems which will cool, inert, and deenergize are practical. The acceptance of the concept of automatic activation of these systems presents a dilemma. Many existing fire-detection systems have not performed well from the standpoint of false alarms, and considering the potential catastrophic results of erroneous operation of a complete ignition-source suppression system, potential users are reluctant to adopt additional systems associated with fire hazards.

The reliability and fail-safe aspects of the activating system must be demonstrable; the preceding requirements must be satisfied. An additional inducement for acceptance might be to require that redundant signals be received within a fixed time interval; otherwise, sensors that are actuated (presumably falsely) would be reset or bypassed.

## CRASH SENSORS

The sensors that are used to detect a crash, in conjunction with the initiating system circuitry, provide the automatic signal to the ignition source suppression system. The initiating system circuitry will be discussed in a subsequent section of the report.

### SWITCHES

There are a variety of sensors available for use in the detection of crashes. The general classifications, which indicate the aspect of the crash environment being sensed, are contact switches, deformation switches, proximity switches, and inertia switches.

#### Contact Switches

Contact switches can be used to sense an abnormal landing in which the fuselage, tail, or other portion of the aircraft normally above ground is in contact with the ground. In rotary-wing aircraft, this type of switch would have to be located on the sides as well as the belly of the aircraft. A rubber strip contact switch (which can also be used as a deformation switch) consists of three separate electrical wires imbedded separately in rubber.[15] When the strip is compressed as a result of contact with an object, the wires are forced together and an electrical circuit is completed. A second example of a contact switch might be the lever-type switch developed in the U.S.S.R.[17] The levers are located in aerodynamically streamlined enclosures which protrude from undersurfaces of the aircraft. The levers are connected mechanically to activating switches which complete an electrical circuit. A final illustration of a contact switch is the frangible switch in which a signal is produced as the result of the failure of a frangible element such as a glass covering.

#### Deformation Switches

Deformation switches can be used to detect severe local structural deformation or unusual movement of engines, transmissions, etc. In the case of fixed-wing aircraft, a cable-type deformation switch can be used to detect penetration of the wing leading edge.[6,15] Since the fuel tanks of fixed-wing aircraft are normally located in the wings, this cable switch may also be used to indicate fuel tank penetration.[3] A schematic representation of this switch and a possible installation are shown in Figures 12 and 13, respectively. As indicated in the preceding paragraph, the rubber strip switch may also be used to detect structural deformations, and is more applicable to

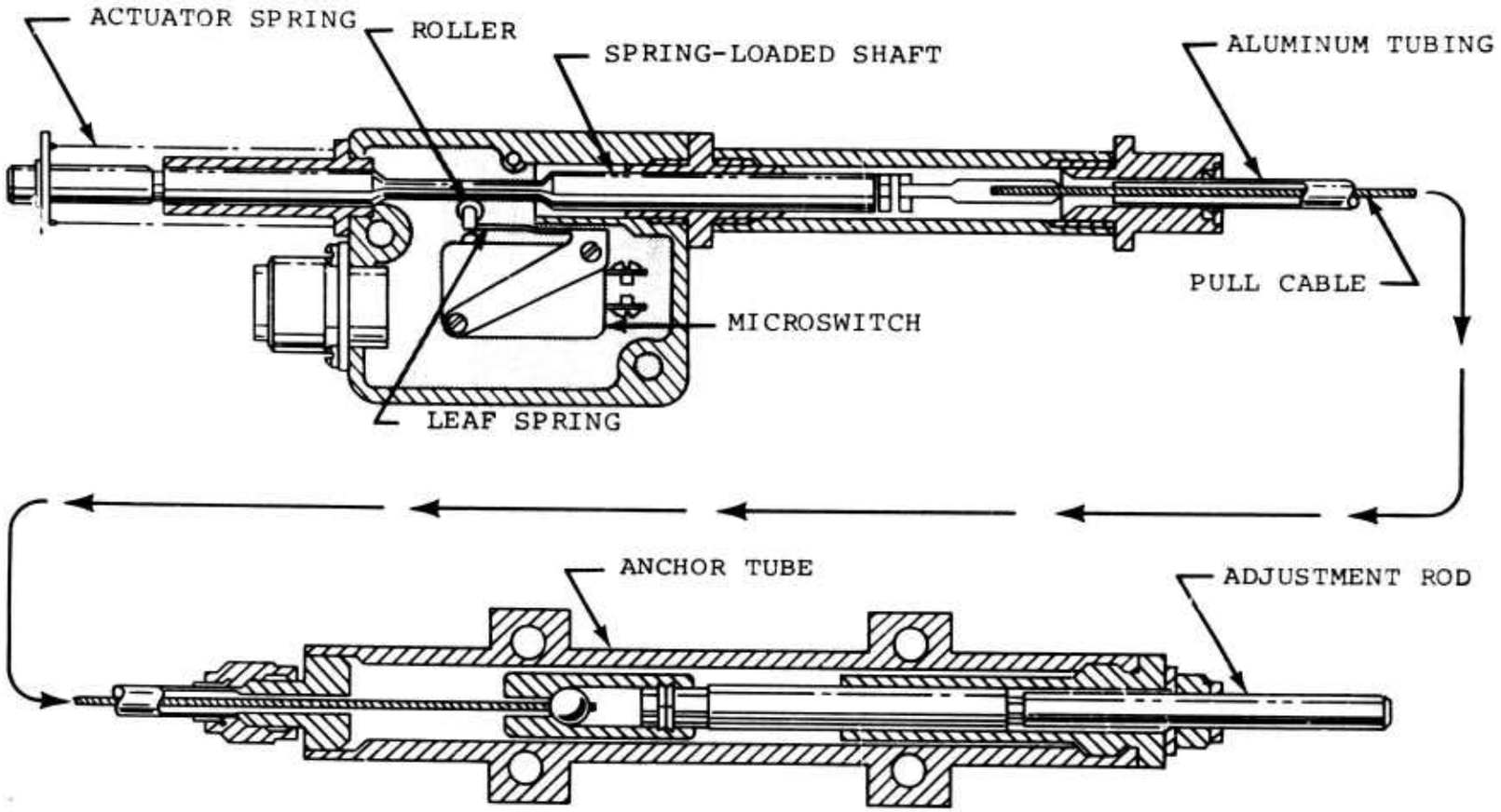


Figure 12. Cable-Type Deformation Switch Schematic (Reference 3).

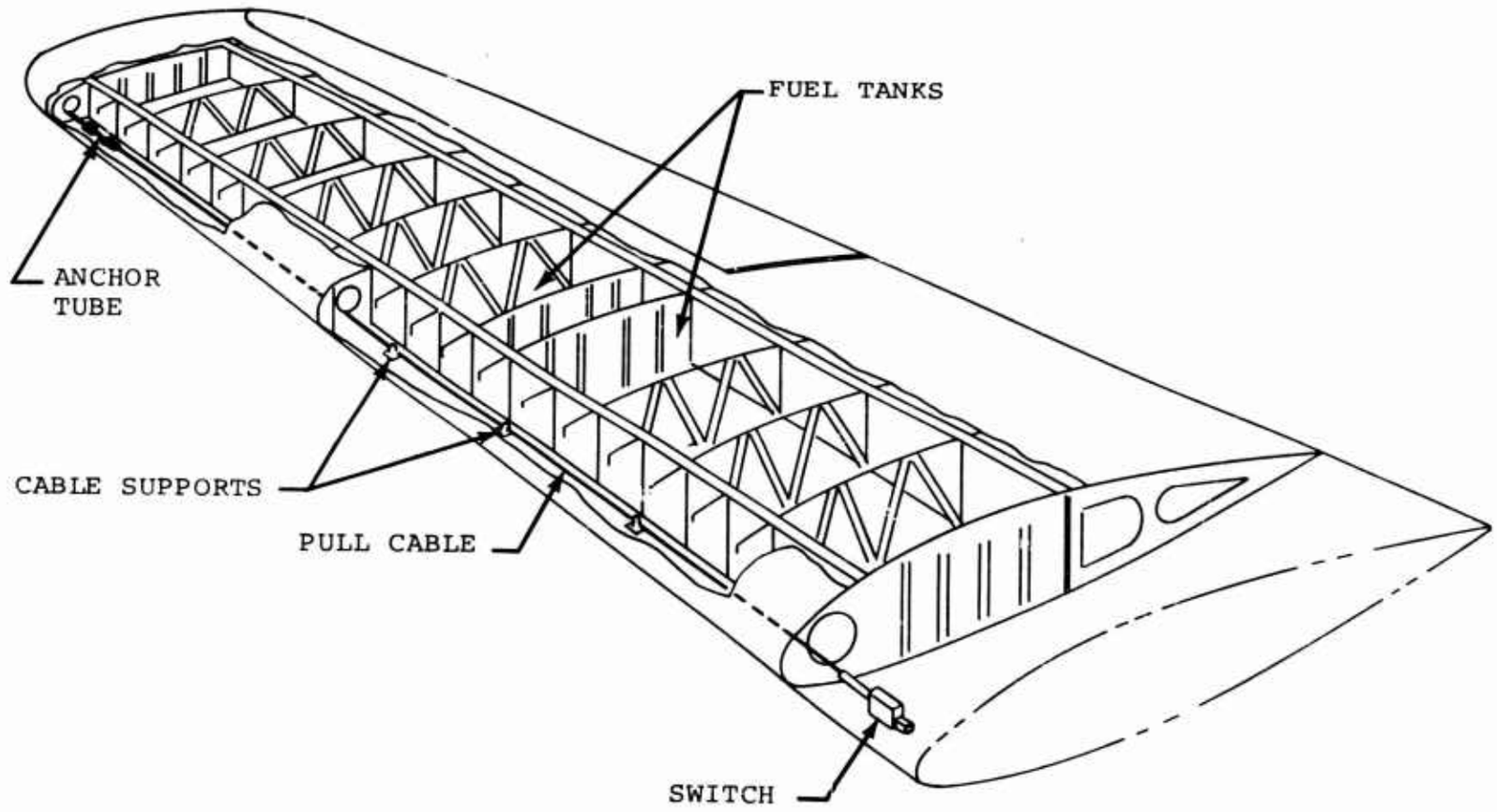


Figure 13. Installation of Cable-Type Deformation Switch (Reference 3).

rotary-wing aircraft than is the cable switch. A second cable-type switch which would be adaptable to rotary-wing aircraft is shown as applied to a fixed-wing plane in Figure 14.[3] This is simply a limit switch that is actuated by an attached cable upon displacement of the landing gear.

Still another example of a deformation switch is shown in Figure 15.[3] This switch, which contains a microswitch, can be used to detect abnormal movement of one part or component of the aircraft relative to another part. In the application of Figure 15, the switch was used to sense breaking away of the engine. A similar switch was used in two locations on a single engine to detect all possible modes of excessive movement of the engine in its mounts.[15]

Proximity Switches

Proximity switches sense the altitude of the aircraft to determine if the aircraft is below the normal height at which it is supported by the landing gear. This type of sensor would be readily adaptable for use with fixed-wing aircraft but would have to be backed up by other types of sensors for use on rotary-wing aircraft.

Inertia Switches

Inertia switches which sense changes in the velocity of an aircraft can also be used as crash sensors. In general, these switches are actuated by relative displacement between a rigidly mounted housing and a reference mass that is free to slide, roll, or rotate within the housing. One type of inertia switch would be a spring-mass-dashpot system, where the mass is held against a seat by the spring. The spring force is set to a level such that the mass will lift off the seat if the acceleration is equal to or exceeds a desired level. A crash could be indicated either by having the mass bridge two contacts and close a circuit after traversing a short distance (normally open circuit), or a contact could be broken and a circuit opened as soon as the mass lifted off the seat (normally closed circuit). A second type of inertia switch substitutes a magnet for the spring-dashpot combination and operates in an analogous manner to the switch that was just discussed. Figure 16 indicates a representative mass-magnet switch. When the ball is subjected to an inertial load sufficient to overcome the magnetic force, the ball breaks free, rises up the slope of the cone, and strikes a plastic plunger, the motion of which opens an electrical circuit. The relatively recent Rolamite concept as applied to an inertia switch is shown in Figure 17. The roller cluster is held at a preset position by an adjustable

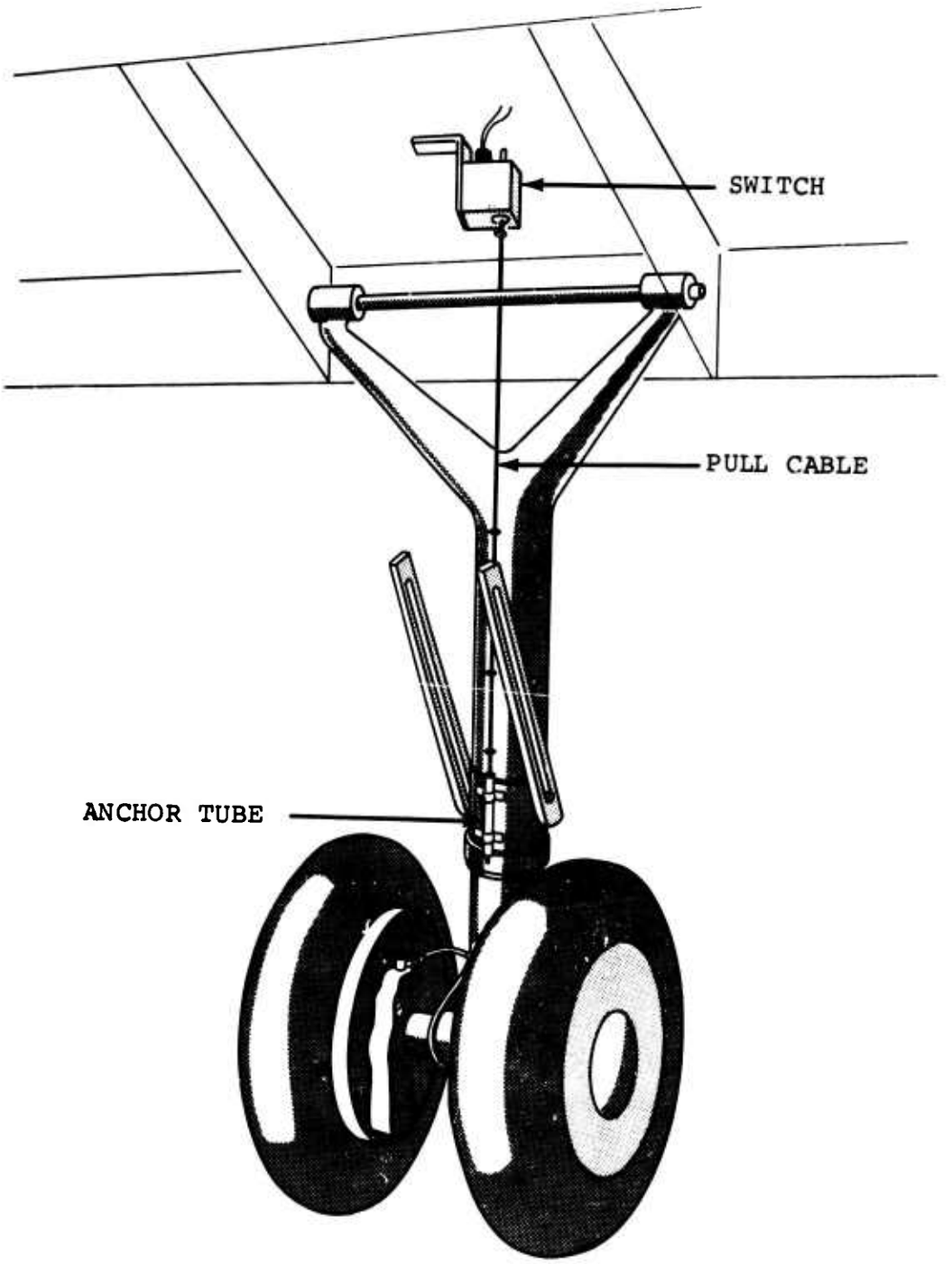


Figure 14. Landing Gear Application of Deformation Switch (Reference 3).

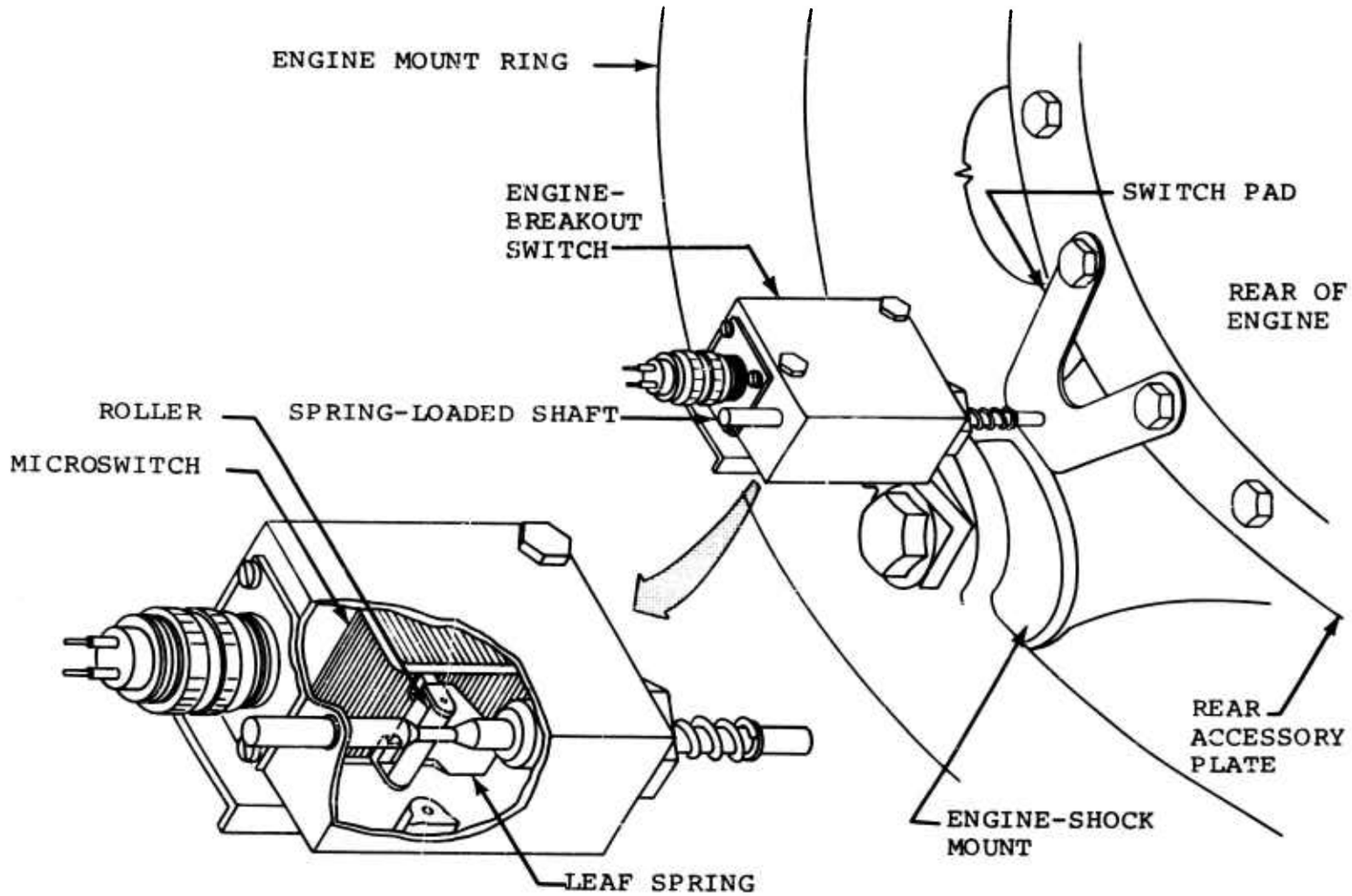


Figure 15. Switch Installed Between Engine Mounting Ring and Engine to Detect Engine Breakout (Reference 3).

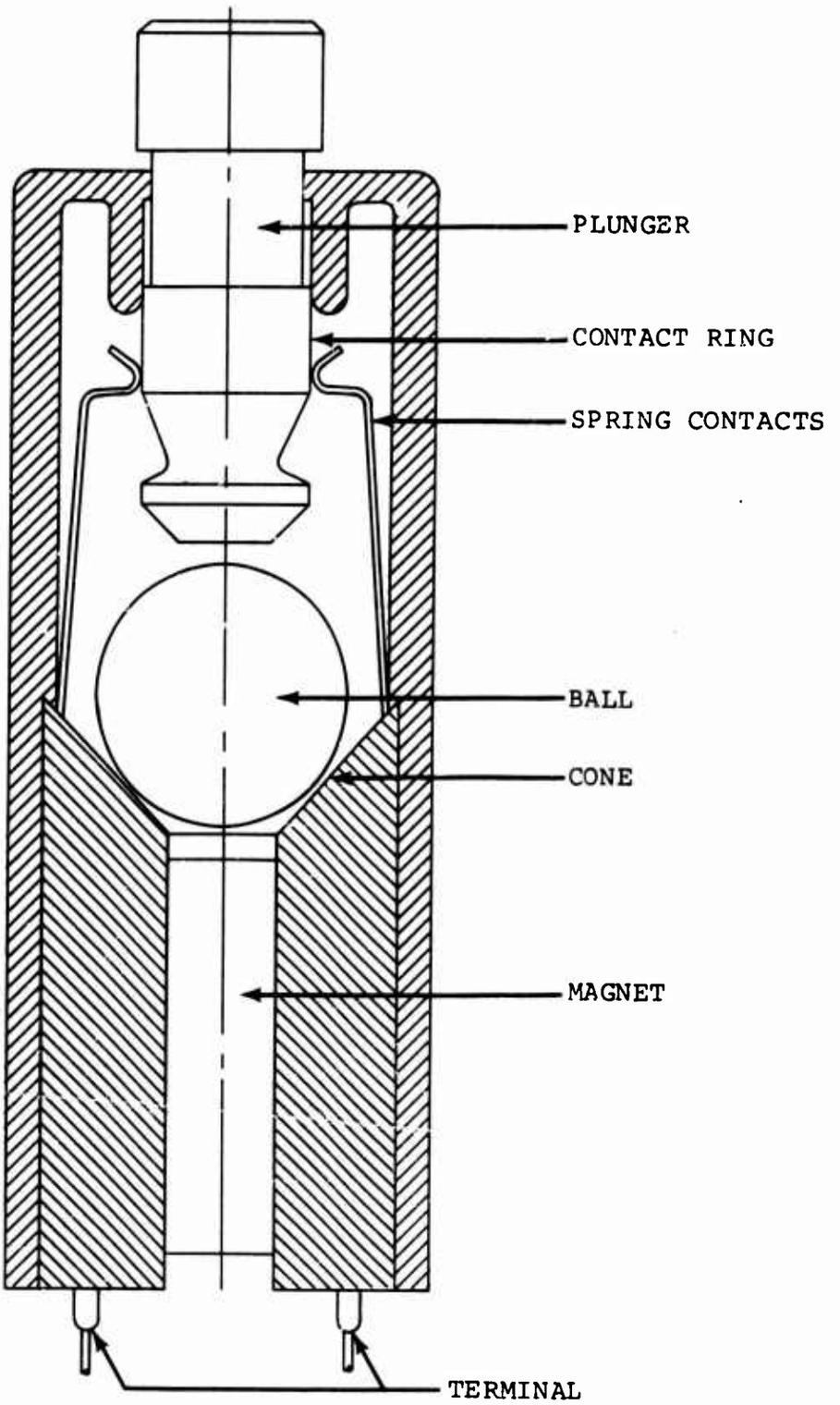


Figure 16. Mass-Magnet Inertia Switch.

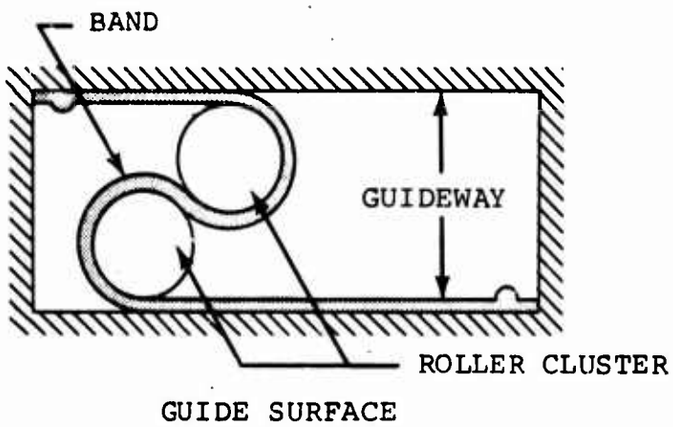


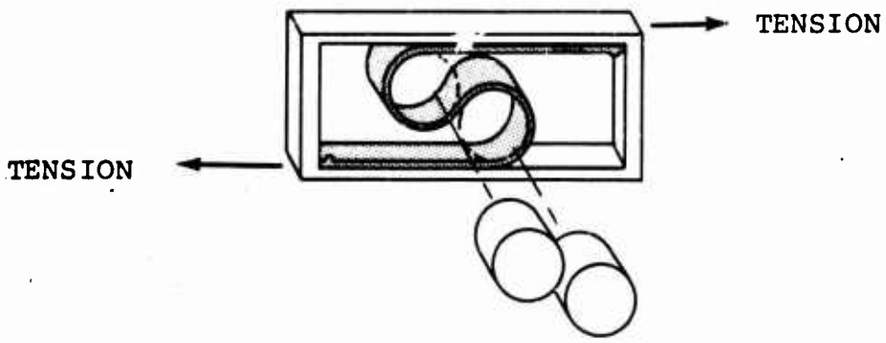


BASIC SWITCH CONCEPT

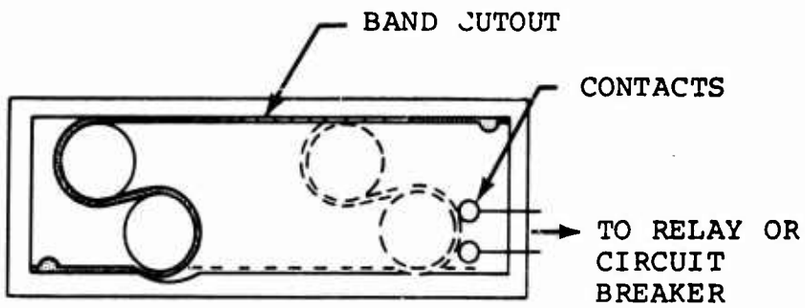


Figure 17. Low-Friction Rolamite Inertia Switch.

stop that determines the acceleration level at which the switch will actuate. If the accelerative force exceeds the limits of the adjustable stop, the cluster travels to the end of the housing, closes electrical contacts, and completes a circuit.

An application of an inertia switch as a battery deenergizer is shown in Figure 18. When the resultant of the acceleration magnitude and duration exceeds a preset level, the steel ball, which rests in the conical seat, travels up the surface of the cone and strikes a spring-loaded metal plate. The plate is forced against a metal housing, energizing a solenoid, and the battery ground is broken. The second steel ball within the switch will complete a circuit and energize the solenoid if the switch housing is tilted more than 90 degrees from the vertical position as shown. This attitude feature of the switch makes its applicability to rotary-wing aircraft marginal.

The feasibility of using acceleration measuring devices as crash sensors was investigated for the U. S. Navy, and the results of the study were published in 1968.[18] A fundamental recommendation of the study was that other types of sensors should be considered in place of acceleration sensors. The main reason for the recommendation is that accelerations are not a unique aspect of a crash, and therefore it is difficult to differentiate accelerations as a result of gentle crashes from those of operational environments. If inertia switches are to be used, they should be applied as redundant crash indicators with a magnitude versus time interval control to help differentiate between a crash situation and normal aircraft movements.

Pressure, Rotational, and Thermal Sensors

Some additional sensors that could be used to detect crashes are:

1. Switches that are actuated by pressure differentials, or by sudden changes in pressures, and which might be installed in fluid system lines to detect excessive pressure drops in the fuel, oil, and hydraulic systems.

2. Switches that are actuated by tachometers and which might be used to detect sudden, crash-initiated decreases in the rotational speeds of engines or rotor blades.

3. Thermal sensors that are actuated by excessive temperatures, by radiation from flames, or by actual burn-through. This type of sensor is marginally applicable to crash detection and is associated,

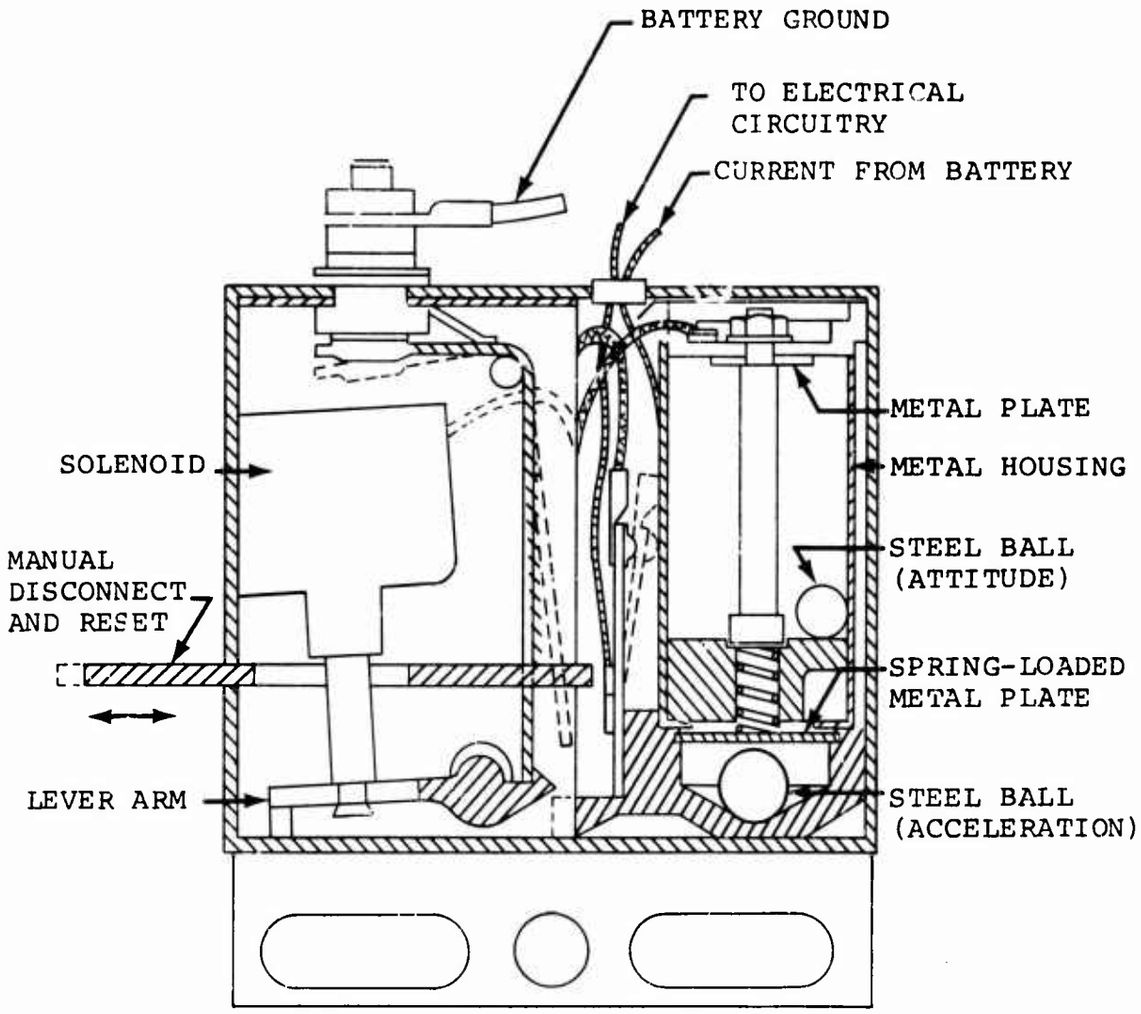


Figure 18. Inertia Switch Applied as Battery Deenergizer.

generally, with the mediocre performance of some existing in-flight fire sensing systems.

SENSOR REQUIREMENTS

The requirements that are applicable to any crash sensor include:

1. Actuation within 0.1 second or sensing the crash.

2. Capability of being manually actuated and reset.

3. Operational within environmental conditions experienced by the aircraft.

4. Capability of being monitored.

5. Fail safe.

INERTIA SWITCH TESTS

The inertia switches illustrated in Figures 17 and 18 were tested by Dynamic Science.

The Rolamite concept inertia switch was installed on the engine of a UH-1D/H helicopter airframe that was drop tested from a height of 14 feet.[19] The switch experienced acceleration magnitudes and durations in excess of its preset limits of 4G and 0.03 second, respectively, and it operated satisfactorily. The battery deenergizing inertia switch (Figure 18) was tested in several sled impacts. In each test, although the resultant of the acceleration magnitude and duration was sufficient, the switch failed to actuate.

Further testing of these and other switches was planned within the original scope of the project. However, a redefined, more limited scope precluded the additional testing that would be required for proper evaluation of these devices.

## ACTIVATING CIRCUITRY

The activating circuitry, in effect, must evaluate the validity of crash indications that emanate from the various crash sensors. If the sensors have correctly indicated the existence of crash conditions, then the activating circuitry must also energize the ignition source suppression system. The activating circuitry and the crash sensors comprise the overall initiating system that must satisfy the requirements that were presented in an earlier section of the report.

The work done to date in the development of activating circuitry has been concerned with multiengine, fixed-wing aircraft. As a result, the prevalent design philosophy incorporated the concept of selective inerting; only those engines involved in the crash indication were to be inerted. Although this philosophy is not applicable to single-engine aircraft, either fixed-wing or rotary-wing, it is still worthwhile to discuss two classic activating circuits.

The investigation of crash fires by NACA/NASA led to the development of an inerting system for reciprocating aircraft and an associated initiating system.[1,2,3] The proposed activating circuitry is shown schematically in Figure 19.

A signal from any one of three switches will result in the inerting of an engine:

1. An engine breakout switch indicates when the crash impact has moved the engine far enough to break fuel and oil lines.

2. A propeller-reduction-gear switch indicates when the propeller-reduction gear housing of the engine breaks away from the power section.

3. A landing gear switch indicates when the landing gear is torn out.

A fuel tank penetration switch indicates when the wing has been penetrated and results in the deenergization of electrical circuits within the wing.

Either the inerting of an engine or the deenergizing of a wing's electrical circuits will cause a signal to be sent to an arming control box. This signal, combined with signals from two ground contact switches, will result in actuation of the entire inerting system. The requirement for simultaneous signals from two ground contact switches in conjunction with a

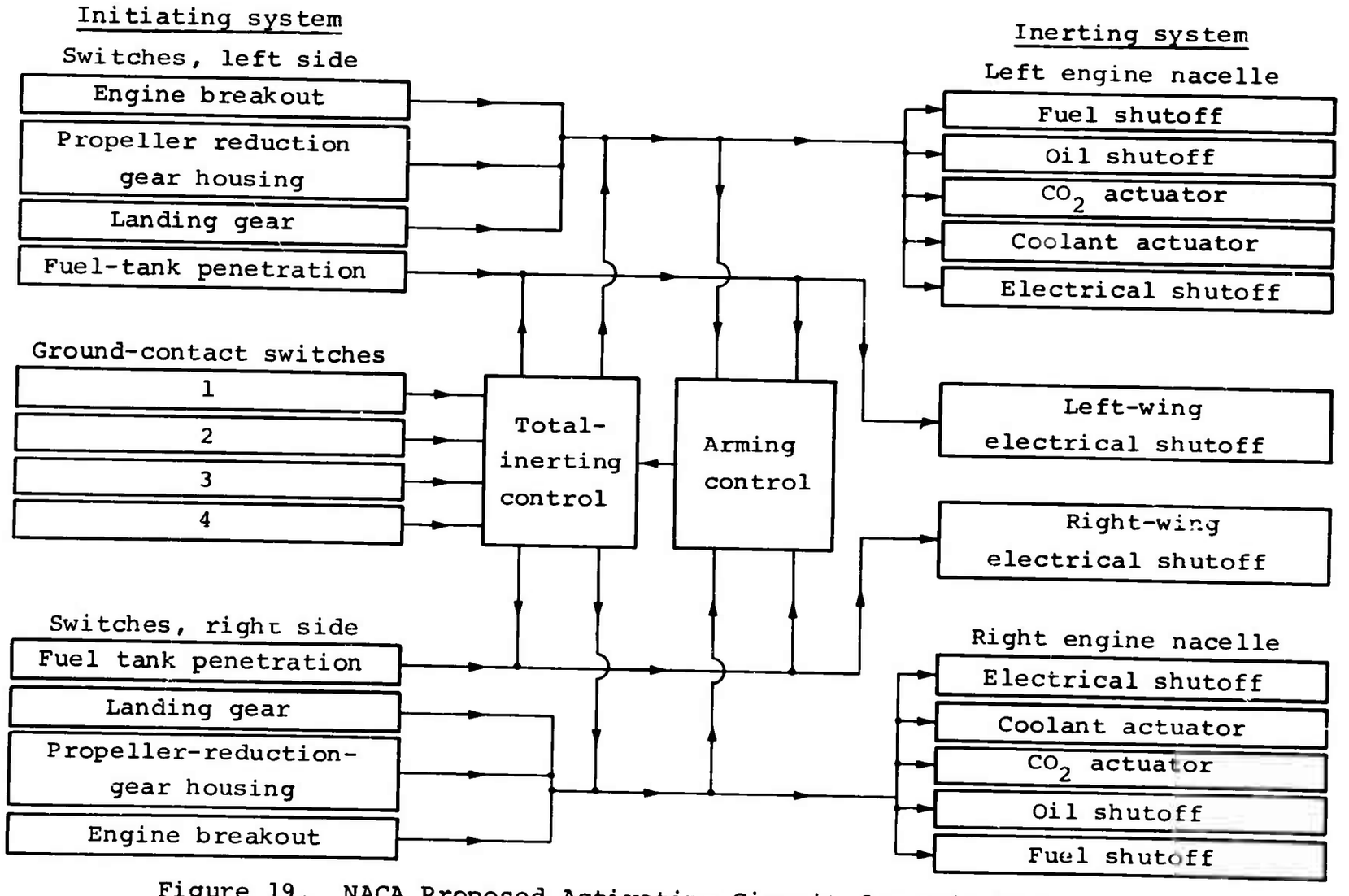


Figure 19. NACA Proposed Activating Circuit for Twin Reciprocating Engine Aircraft (Reference 3).

signal from one of the other type initiating switches reduces the possibility of the entire inerting system's operating while the aircraft is still in the air.

A second activating circuit is shown schematically in Figure 20. This system was installed in a C-119F airplane and flight tested under varying flight conditions[15] to prove that the system could be depended upon not to malfunction during flight.

In this system, engine damage is sensed by two engine reaction switches while wing damage is sensed by two cable-type deformation switches. The actuation of one switch of each type will trigger the inerting system on that side of the aircraft and will shut off electrical power in that wing. Operation of any one of these switches will cause an arming signal to be sent to the initiating system control box. This signal, as in the preceding system, when combined with a ground contact indication, will result in operation of the entire inerting system. The ground contact signal is actuated only by the simultaneous operation of any two fuselage deformation switches. The fuselage deformation switches were used as momentary contact devices (individual holding relays were omitted) in order to guard against false ground contact signals that might be produced as a result of a brush with a tree top.

A schematic of activating circuitry that could be applied to rotary- and fixed-wing single-engine aircraft is shown in Figure 21. The average reading of four proximity switches is compared with the aircraft's normal landing height. If the average is less than the normal landing height for a period of time that is longer than a preset minimum duration, then an arming signal is initiated. The proximity arming signal may also be initiated directly by the pilot. The second independent arming signal, which is required before automatic operation of the ignition-source suppression system, must be provided by a generic "hazard" switch. This hazard switch may be any of the sensors previously discussed, e.g., contact switch or deformation switch. Provision is also made for a manual "hazard" input by the pilot. When the ARM-DISARM switch is in the "off" position, inadvertent operation under normal flight conditions is not possible. This switch also enables the pilot to override the entire system.

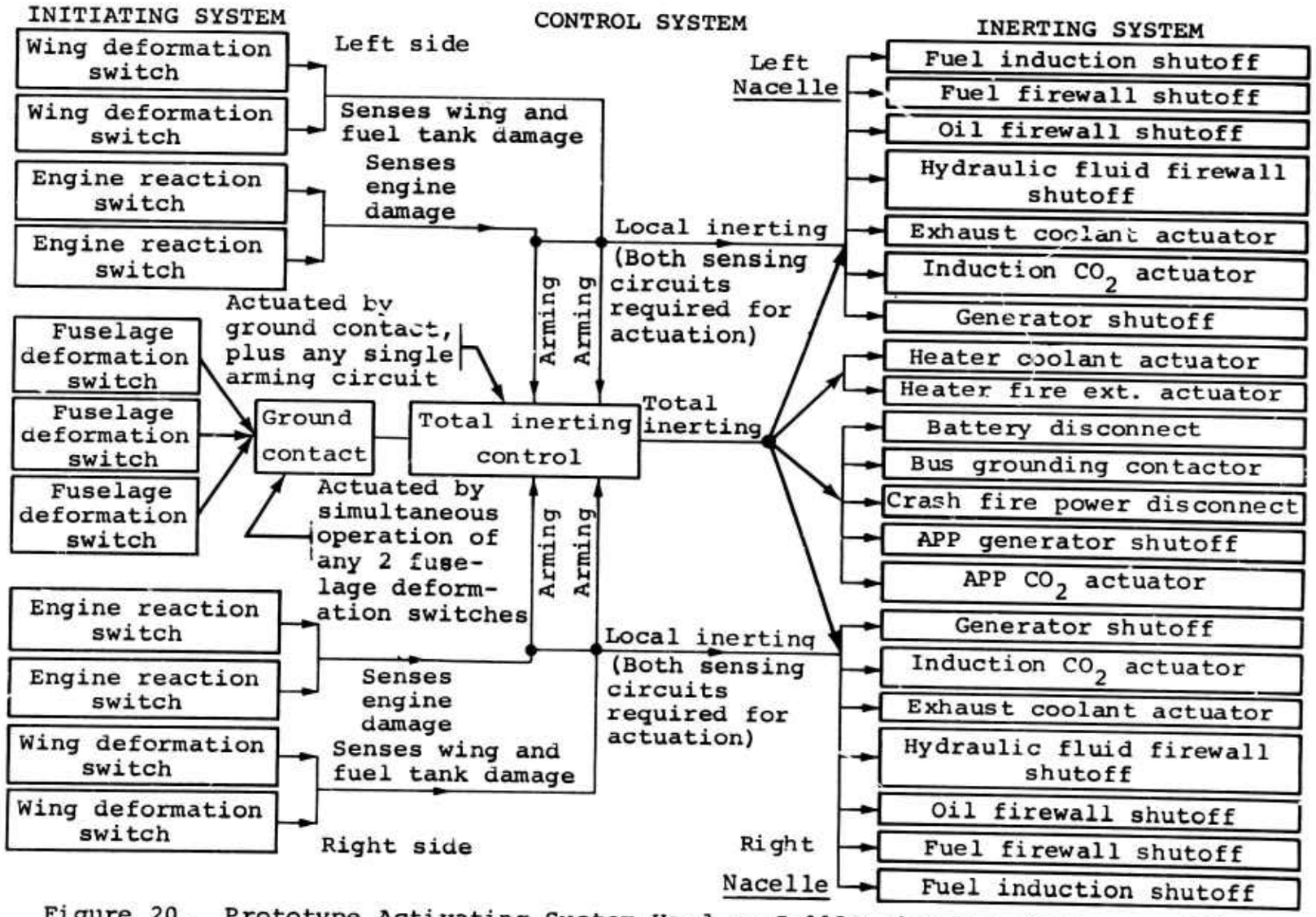


Figure 20. Prototype Activating System Used on C-119F Airplane (Reference 15).

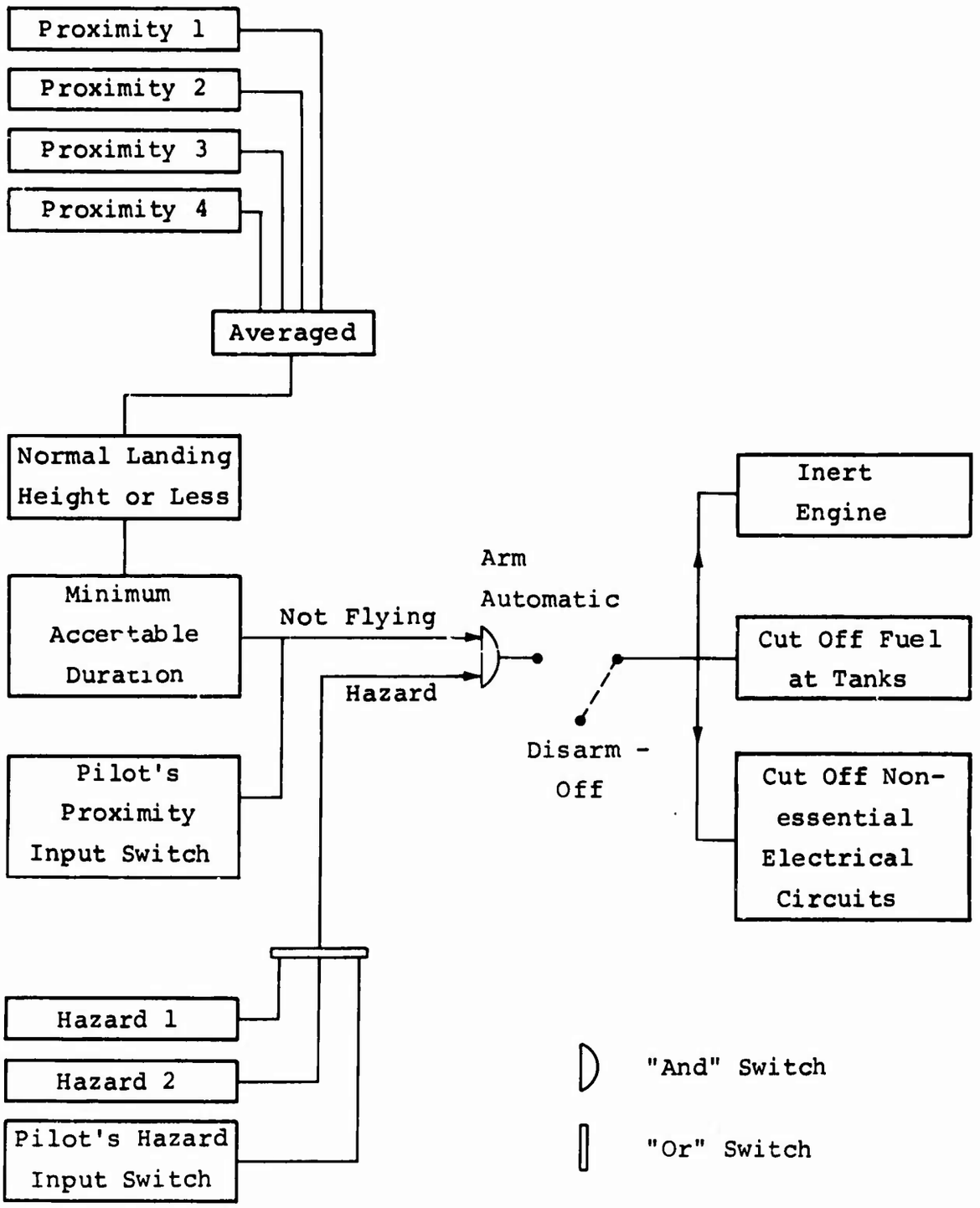


Figure 21. Potential Activating Circuitry for Single-Engine Aircraft.

## EVALUATION OF SYSTEMS

A valid evaluation of an initiating system requires that consideration be given to the sensors and the activating circuitry, and the interrelationship between them. The system must be accurate, reliable, automatic, and rapid. The system must provide for sensor redundancy, manual actuation, override and reset, and monitoring.

The systems which were used as illustrations all satisfy the requirements for automatic operation, for sensor redundancy, and, although not necessarily and explicitly indicated on the schematics, for manual actuation, override and reset, and monitoring. The remaining requirements are functions of the sensors used, the particular application, and the design philosophy adopted by the controlling project personnel. The types of sensors, their locations on the aircraft, and the activating circuitry that would be required for rotary-wing aircraft, which are subject to all combinations of vertical, lateral, and longitudinal loadings, would be considerably different from those required for fixed-wing aircraft.

## CONCLUSIONS AND RECOMMENDATIONS

The state of the art of aircraft ignition-source control systems is advanced to the point where workable systems that will cool hot surfaces, inert the atmosphere surrounding a source, and deenergize electrical systems are feasible. The areas of the ignition-source control problem that require considerable development are: the choice and the degree of redundancy of the crash sensors; the locations of the sensors on the aircraft; and the complexity of the activating and control circuitry. The requirements of rotary-wing aircraft with their inherently unique crash environments are in many ways more demanding than the requirements of fixed-wing aircraft. The reliability of automatic activating systems must be clearly demonstrable, the systems must be proven to be accurate, and they must be virtually fail-safe in order to be acceptable.

It is recommended that future effort in the ignition-source control field be directed toward solving the problem of adaptation of the automatic aspect of the activating system to rotary-wing aircraft. The development effort should be concentrated on selecting the types and locations of sensors and on designing the activating circuitry.

## LITERATURE CITED


1. Pinkel, I. Irving, et al, MECHANISM OF START AND DEVELOPMENT OF AIRCRAFT CRASH FIRES, NACA Report 1133, National Advisory Committee for Aeronautics, 1953.

2. Black, Dugald O., and Moser, Jacob C., FULL-SCALE PERFORMANCE STUDY OF A PROTOTYPE CRASH-FIRE PROTECTION SYSTEM FOR RECIPROCATING-ENGINE-POWERED AIRPLANES, NACA RM E55B11, National Advisory Committee for Aeronautics, November 1955.

3. Moser, Jacob C., and Black, Dugald O., PROPOSED INITIATING SYSTEM FOR CRASH-FIRE PREVENTION SYSTEMS, NACA TN 3774, National Advisory Committee for Aeronautics, December 1956.

4. Pinkel, I. Irving, et al, ORIGIN AND PREVENTION OF CRASH FIRES IN TURBOJET AIRCRAFT, NACA Report 1363, 1958.

5. Black, Dugald O., CRASH-FIRE PROTECTION SYSTEM FOR A J57 TURBOJET ENGINE USING WATER AS A COOLING AND INERTING AGENT, NASA TN D-274, National Aeronautics and Space Administration, February 1960.

6. A FEASIBILITY STUDY OF A CRASH-FIRE PREVENTION SYSTEM FOR THE SUPERSONIC COMMERCIAL TRANSPORT, Final Report, Aeronautical Systems Division, AF Aero-Propulsion Laboratory, Support Techniques Division, Wright-Patterson Air Force Base, Ohio, April 1963.

7. Gatlin, Clifford I., and Johnson, Neva B., PREVENTION OF ELECTRICAL SYSTEM IGNITION OF AUTOMOTIVE CRASH FIRE, Dynamic Science, AvSER Report 2310/20-70-7, Department of Transportation, March 1970.

8. Robertson, S. H., et al, THEORY, DEVELOPMENT, AND TEST OF A CRASH FIRE-INERTING SYSTEM FOR RECIPROCATING ENGINE HELICOPTERS, Aviation Safety Engineering and Research of Flight Safety Foundation, TRECOM Technical Report 63-49, U. S. Army Transportation Research Command, Fort Eustis, Virginia, December 1963.

9. CRASH SURVIVAL DESIGN GUIDE, USAAVLABS Technical Report 70-22, U. S. Army Aviation Materiel Laboratories, Fort Eustis, Virginia, August 1969, AD 695648.

10. Jones, G. W., et al, RESEARCH ON THE FLAMMABILITY CHARACTERISTICS OF AIRCRAFT FUELS, WADC Technical Report 52-35, Supplement 1, Wright Air Development Center, Wright-Patterson Air Force Base, January 1954.

11. Smith, Maxwell, TECHNICAL CURIOSITIES: "OLEODIESELING", Shell Aviation News, No. 183, pp. 8-9, September 1953.

12. Mullins, B. P., STUDIES ON THE SPONTANEOUS IGNITION OF FUELS INJECTED INTO A HOT AIR STREAM: PART II - THE EFFECT OF PHYSICAL FACTORS UPON THE IGNITION DELAY OF KEROSENE-AIR MIXTURES, Report No. R.90, British N.G.T.E., September 1951.

13. Jones, G. W, Zabetakis, M. G., Scott, G. S., and Furno, A. L, RESEARCH ON THE FLAMMABILITY CHARACTERISTICS OF AIRCRAFT FUELS, WADC Technical Report 52-35, Supplement 2, Wright Air Development Center, Wright-Patterson Air Force Base, August 1954.

14. Campbell, J. A., APPRAISAL OF THE HAZARDS OF FRICTION - SPARK IGNITION OF AIRCRAFT CRASH FIRES, Lewis Flight Propulsion Laboratory, NACA Technical Note 4024, National Advisory Committee for Aeronautics, Cleveland, Ohio, May 1957.

15. Jones, R. B., et al, AN ENGINEERING STUDY OF AIRCRAFT CRASH FIRE PREVENTION, Walter Kidde and Company, Inc., Belleville, New Jersey, WADC-TR-57-370, June 1958.

16. Hebenstreit, L. V., et al, DEVELOPMENT OF FULL SCALE PYROTECHNIC GENERATED GAS DISCHARGE FIRE EXTINGUISHING SYSTEM, Walter Kidde and Company, Inc., Technical Report AFAPL-TR-69-66, 1969.

17. Korolev, A. I., and Vinogradov, A. S., IMPACT ACTUATED MECHANISM FOR ENGAGING FIRE EXTINCTION SYSTEMS, Air Force Systems Command, Wright-Patterson Air Force Base, Ohio, FTD-TT-64-180, June 1964.

18. FEASIBILITY OF ON-BOARD ACCELERATION SENSING AS A MEANS OF AUTOMATICALLY DETECTING AIRCRAFT CRASHES, Final Report, Sanders Associates, Inc., Nashua, New Hampshire, January 1968.

19. Gatlin, C. I., et al, ANALYSIS OF HELICOPTER STRUCTURAL CRASHWORTHINESS, Volumes I and II, Dynamic Science, USAAVLABS Technical Report 70-71A and 70-71B, Eustis Directorate, U. S. Army Air Mobility Research and Development Laboratory, Fort Eustis, Virginia, January 1971.