A UNITED STATES DEPARTMENT OF COMMERCE PUBLICATION

NBS TECHNICAL NOTE 603

AD 728612

DDC
RECEIVED
AUG 30 1971

Construction of a Flashlamp-Pumped Dye Laser and an Acousto-Optic Modulator for Mode-Locking

Reproduced by
NATIONAL TECHNICAL
INFORMATION SERVICE
Springfield, Va. 22151

U. S.
DEPARTMENT
OF
COMMERCE
National
Bureau
of
Standards

37

BEST
AVAILABLE COPY

FORM NBS-114A (1-71)

U.S. DEPT. OF COMM. BIBLIOGRAPHIC DATA SHEET	1. PUBLICATION OR REPORT NO. NBS-TN-603	2. Gov't Accession No.	3. Recipient's Accession No.

4. TITLE AND SUBTITLE

Construction of a Flashlamp-Pumped Dye Laser and an Acousto-Optic Modulator for Mode-Locking

5. Publication Date

July 1971

6. Performing Organization Code

7. AUTHOR(S)

D. A. Jennings and D. L. Baldwin

8. Performing Organization

9. PERFORMING ORGANIZATION NAME AND ADDRESS

NATIONAL BUREAU OF STANDARDS
DEPARTMENT OF COMMERCE
WASHINGTON, D.C. 20234

10. Project/Task/Work Unit No.

2710153/2710456

11. Contract/Grant No.

ARPA Order No. 891

12. Sponsoring Organization Name and Address

Advanced Research Projects Agency
1400 Wilson Blvd.
Arlington, Virginia 22209

13. Type of Report & Period Covered

Final

14. Sponsoring Agency Code

15. SUPPLEMENTARY NOTES

16. ABSTRACT (A 200-word or less factual summary of most significant information. If document includes a significant bibliography or literature survey, mention it here.)

In this paper is presented the design of a flashlamp-pumped dye laser capable of emitting light pulses 500 ns wide (FWHM) with a risetime of 300 ns. The energy output in the visible region of light is 1 to 10mJ with an energy conversion efficiency of about 0.01% at a repetition rate of 30 pps. The design of an acousto-optic modulator used to mode-lock the dye laser by intracavity loss modulation is presented. The laser output for a given cavity length depends on the frequency and voltage applied to the modulator; a 10% - 100% modulated output can be obtained with 1 V rms - 20 V rms, whereas a train of light pulses narrower than 0.8 ns (FWHM) can be obtained with 80 V rms.

Details of illustrations in this document may be better studied on microfiche

17. KEY WORDS (Alphabetical order, separated by semicolons)

Acousto-optic modulator; flashlamp-pumped dye laser; mode-locking; sub-nanosecond pulses.

18. AVAILABILITY STATEMENT

[X] UNLIMITED.

[ ] FOR OFFICIAL DISTRIBUTION. DO NOT RELEASE TO NTIS.

19. SECURITY CLASS (THIS REPORT)

UNCLASSIFIED

20. SECURITY CLASS (THIS PAGE)

UNCLASSIFIED

21. NO. OF PAGES

33

22. Price

ACCESSION for
CFSTI WHITE SECTION
DDC BUFF SECTION
UNANN. CED.
JUSTIFICATION
BY
DISTRIBUTION/AVAILABILITY CODES
AVAIL. and/or SPECIAL
A 24

NATIONAL BUREAU OF STANDARDS

The National Bureau of Standards[1] was established by an act of Congress March 3, 1901. The Bureau's overall goal is to strengthen and advance the Nation's science and technology and facilitate their effective application for public benefit. To this end, the Bureau conducts research and provides: (1) a basis for the Nation's physical measurement system, (2) scientific and technological services for industry and government, (3) a technical basis for equity in trade, and (4) technical services to promote public safety. The Bureau consists of the Institute for Basic Standards, the Institute for Materials Research, the Institute for Applied Technology, the Center for Computer Sciences and Technology, and the Office for Information Programs.

THE INSTITUTE FOR BASIC STANDARDS provides the central basis within the United States of a complete and consistent system of physical measurement; coordinates that system with measurement systems of other nations; and furnishes essential services leading to accurate and uniform physical measurements throughout the Nation's scientific community, industry, and commerce. The Institute consists of a Center for Radiation Research, an Office of Measurement Services and the following divisions:

Applied Mathematics—Electricity—Heat—Mechanics—Optical Physics—Linac Radiation[2]—Nuclear Radiation[2]—Applied Radiation[2]—Quantum Electronics[3]—Electromagnetics[3]—Time and Frequency[3]—Laboratory Astrophysics[3]—Cryogenics[3].

THE INSTITUTE FOR MATERIALS RESEARCH conducts materials research leading to improved methods of measurement, standards, and data on the properties of well-characterized materials needed by industry, commerce, educational institutions, and Government; provides advisory and research services to other Government agencies; and develops, produces, and distributes standard reference materials. The Institute consists of the Office of Standard Reference Materials and the following divisions:

Analytical Chemistry—Polymers—Metallurgy—Inorganic Materials—Reactor Radiation—Physical Chemistry.

THE INSTITUTE FOR APPLIED TECHNOLOGY provides technical services to promote the use of available technology and to facilitate technological innovation in industry and Government; cooperates with public and private organizations leading to the development of technological standards (including mandatory safety standards), codes and methods of test; and provides technical advice and services to Government agencies upon request. The Institute also monitors NBS engineering standards activities and provides liaison between NBS and national and international engineering standards bodies. The Institute consists of the following technical divisions and offices:

Engineering Standards Services—Weights and Measures—Flammable Fabrics—Invention and Innovation—Vehicle Systems Research—Product Evaluation Technology—Building Research—Electronic Technology—Technical Analysis—Measurement Engineering.

THE CENTER FOR COMPUTER SCIENCES AND TECHNOLOGY conducts research and provides technical services designed to aid Government agencies in improving cost effectiveness in the conduct of their programs through the selection, acquisition, and effective utilization of automatic data processing equipment; and serves as the principal focus within the executive branch for the development of Federal standards for automatic data processing equipment, techniques, and computer languages. The Center consists of the following offices and divisions:

Information Processing Standards—Computer Information—Computer Services—Systems Development—Information Processing Technology.

THE OFFICE FOR INFORMATION PROGRAMS promotes optimum dissemination and accessibility of scientific information generated within NBS and other agencies of the Federal Government; promotes the development of the National Standard Reference Data System and a system of information analysis centers dealing with the broader aspects of the National Measurement System; provides appropriate services to ensure that the NBS staff has optimum accessibility to the scientific information of the world, and directs the public information activities of the Bureau. The Office consists of the following organizational units:

Office of Standard Reference Data—Office of Technical Information and Publications—Library—Office of Public Information—Office of International Relations.

---

[1] Headquarters and Laboratories at Gaithersburg, Maryland, unless otherwise noted; mailing address Washington, D.C. 20234.
[2] Part of the Center for Radiation Research.
[3] Located at Boulder, Colorado 80302.

UNITED STATES DEPARTMENT OF COMMERCE
Maurice H. Stans, Secretary
NATIONAL BUREAU OF STANDARDS ● Lewis M. Branscomb, Director

NBS TECHNICAL NOTE 603

ISSUED JULY 1971

Nat. Bur. Stand. (U.S.), Tech. Note 603, 33 pages (July 1971)
CODEN: NBTNA

Construction of a Flashlamp-Pumped Dye Laser and an Acousto-Optic Modulator for Mode-Locking

D. A. Jennings and D. L. Baldwin

Quantum Electronics Division
Institute for Basic Standards
National Bureau of Standards
Boulder, Colorado 80302

Details of illustrations in this document may be better studied on microfiche

NBS Technical Notes are designed to supplement the Bureau's regular publications program. They provide a means for making available scientific data that are of transient or limited interest. Technical Notes may be listed or referred to in the open literature.

This research was partially supported by the Advanced Research Projects Agency of the Department of Defense under ARPA Order No. 891.

For sale by the Superintendent of Documents, U.S. Government Printing Office, Washington, D.C. 20402
(Order by SD Catalog No. C13.46:603), Price $1.00
Stock Number 0303-0867

BLANK PAGE

Construction of a Flashlamp-Pumped Dye Laser and an Acousto-Optic Modulator for Mode-Locking

D. A. Jennings and D. L. Baldwin

In this paper is presented the design of a flashlamp-pumped dye laser capable of emitting light pulses 500 ns wide (FWHM) with a risetime of 300 ns. The energy output in the visible region of light is 1 to 10 mJ with an energy conversion efficiency of about 0.01% at a repetition rate of 30 pps. The design of an acousto-optic modulator used to mode-lock the dye laser by intracavity loss modulation is presented. The laser output for a given cavity length depends on the frequency and voltage applied to the modulator; a 10% - 100% modulated output can be obtained with 1 V rms - 20 V rms, whereas a train of light pulses narrower than 0.8 ns (FWHM) can be obtained with 80 V rms.

Key Words: Acousto-optic modulator; flashlamp-pumped dye laser; mode-locking; sub-nanosecond pulses.

1. Introduction

Flashlamp-pumped dye lasers were first reported in 1967,[1] and improvements too numerous to mention have been reported since that date.[2] With the use of a grating or a few prisms and proper choice of dyes, a tuning range from 400 nm to 650 nm is accessible.

An excellent review article[3] on mode-locking of lasers is available. Mode-locking of a flashlamp-pumped dye laser at 460 nm

has been reported.[4] The theory of mode-locking has been discussed by Di Domenico[5] and Harris.[6]

2. Dye Laser Construction

Several articles have described the construction of flashlamp-pumped dye lasers.[7], [8] However, these designs are for coaxial systems which do not lend themselves to fast repetition rates due to the inability for flashlamp cooling to be designed into the system. Heating of the dye solution will cause thermally induced index of refraction gradients which lower the quality of the optical cavity and hence inhibit the performance of the laser. What is needed is a system in which the flashlamp and dye solutions may be cooled separately. The use of elliptical pumping geometry is adaptable to this cooling requirement. In this part of the note we describe a flashlamp-pumped dye laser with elliptical pumping and repetition rates of up to 30 pps.

Several papers have discussed the use of elliptical geometries for laser pumping cavities.[9], [10], [11] A block diagram of the dye laser is shown in figure 1 complete with the ultrasonic modulator. The detailed construction drawings are shown in the foldouts 1-5.

The laser pumping cavity was an aluminum cylinder of elliptical cross section with a major axis of 5.4 cm and eccentricity of 0.45. The flashlamp and dye cell were placed at the foci of the ellipise. The interior surfaces of the pump cavity were highly polished. The output

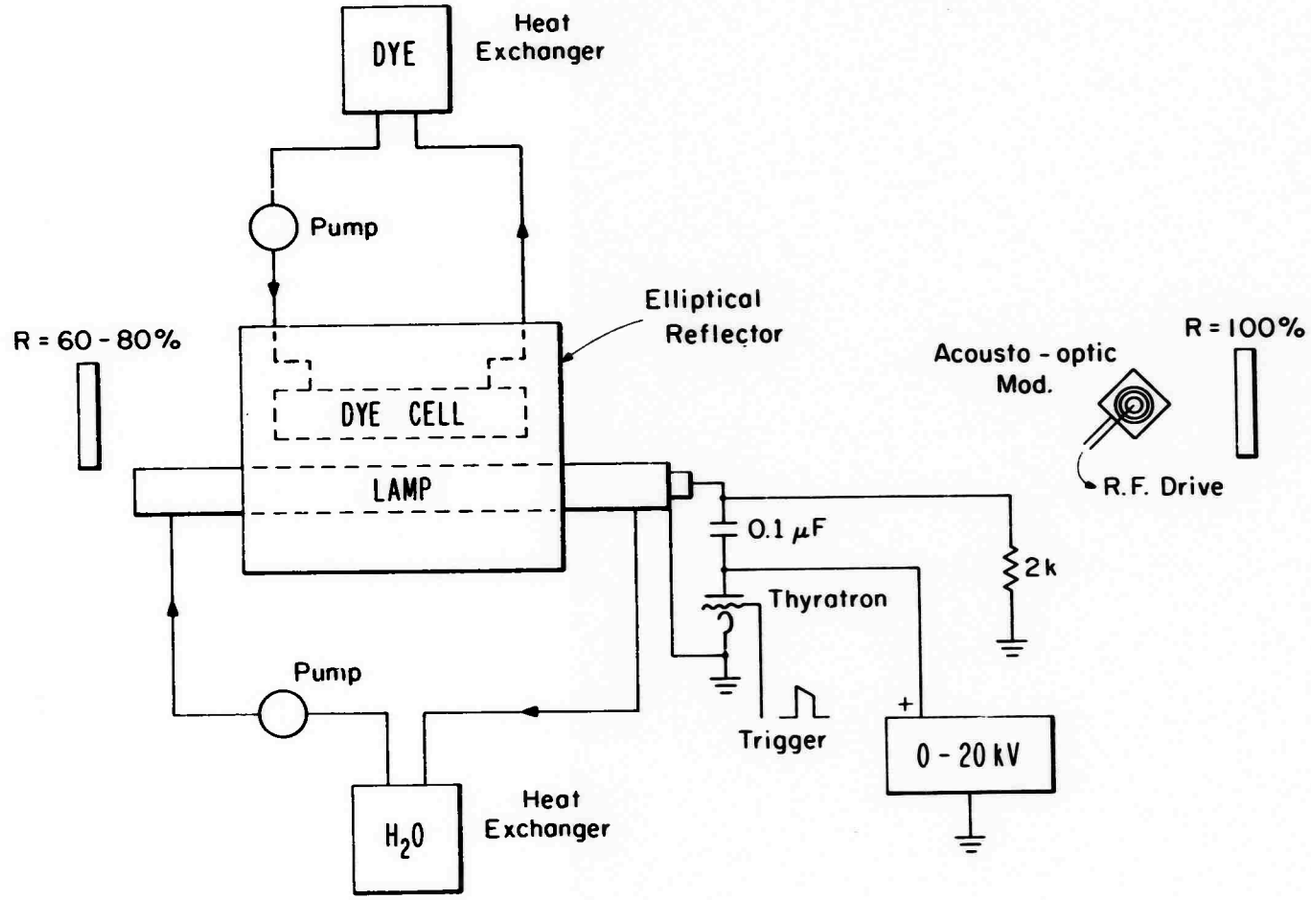

Figure 1. A block diagram of the dye laser with acousto-optic modulator in the cavity.

mirror was flat with a multilayer dielectric coating of 60 - 95% reflectivity. The other mirror was either a 2100 line/mm grating blazed at 500 nm in the first order with a reflectivity of 73% at 633 nm, or a 100% reflecting mirror. The mirror separation was 60 - 100 cm.

The dye laser uses 10^{-3} - 10^{-4} mole solution of Rhodamine 6G in ethanol. The dye solution was circulated at a flow rate of about 10 liters per minute. The flashlamp has a 9 cm arc length and a 3 mm bore and is water cooled. It is powered by a 0.1 μf, 20 KV, thyratron dumped capacitor. The flashlamp-pumping system is capable of 10 J per pulse and 30 pps.

Some operating characteristics of this dye laser without the modulator are as follows: the threshold using a 95% and 100% reflectivity mirror is 1 - 2 J, depending on the dye concentration. With an 80% reflectivity mirror and the grating, the threshold is around 5 J.

The peak emission of Rhodamine 6G is near 580 nm. However, by using methanol as a solvent for shorter wavelengths and high dye concentration in ethanol for longer wavelengths, we have been able to tune the laser from 560 to 630 nm. The line width of the emission using the grating is $\sim$ 0.1 nm.

The flashlamp has a risetime (10 - 90% power points) of 300 ns and fall time of about the same with a 15% overshoot in the current

pulse. The current pulse width is 700 ns full width at half maximum (FWHM). The laser output when pumped at 10 J is 200 - 500 ns (FWHM) in duration and 1 - 10 mJ, depending on mirror reflectivity, dye concentration, and wavelength.

3. Mode-Locking of the Dye Laser

3.1 Mode-Locking by Modulation Internal to the Cavity.

One can mode-lock a laser by modulating the losses of the cavity at a frequency near $c/2L$,[12] where c is the speed of light in a vacuum and L is the optical distance between the mirrors of the cavity. Modulation depths of a few percent to 50% internal to the cavity can give rise to 100% modulation of the laser output. In fact one can produce a train of pulses with subnanosecond widths separated by the cavity round trip transit time, in this case 10 ns. In this part of the note we describe the theory of modulation of light by acoustic waves, the construction of an acousto-optic modulator, and the results from mode-locking a dye laser.

3.2. Simplified Theory of Acousto-Optic Modulation.

In the acousto-optic method of mode-locking, the modulator is a fused quartz block excited at a longitudinal acoustic resonance. In our system the laser beam is incident parallel to the wave front of the standing acoustic wave; the laser beam diameter is much greater than the acoustic wavelength; the transit time of light through the block is

short compared to the period of the acoustic wave; and the frequency of the acoustic wave is near one-half the frequency of the fundamental longitudinal mode of the laser cavity.

We use the Raman-Nath theory[13] to describe the diffraction of light by a sound wave. For a given width of the sound beam measured along the path traversed by the light, the maximum change in index of refraction, Δn, has an upper limit for the Raman-Nath theory to be applicable. Willard[14] gives an expression for the value of Δn above which the Raman-Nath theory yields the wrong quantitative results for the intensity of light in the various diffraction orders. Even so, from experiments we know that one may increase Δn past the limit given by Willard to produce additional modulation depths in the zero order diffracted beam of light. Thus, even for Δn so great that the Raman-Nath theory breaks down quantitatively it still yields the correct qualitative intensity for the undeviated beam of light.

A sound wave propagating through a material in the x-direction causes variation in the index of refraction:

$$n(x, t) = n_o + \Delta n \sin (k^* x - \omega^* t)$$

where $n(x, t)$ is the index of refraction with the confinement of the sound beam,

n_o is the index of refraction of the modulator material with no sound beam,

Δn is the maximum change in index of refraction,

k^* is the propagation constant of the sound wave, and

ω^* is the angular frequency of the sound wave.

In our case, the sound wave is a standing acoustic wave where:

$$n(x, t) = n_o + \Delta n (\cos k^* x) (\sin \omega^* t) \ .$$

The block then appears as a phase grating to light incident perpendicular to the x-axis. The analysis of light passing through a phase grating is very similar to the analysis of an ordinary diffraction grating, but one replaces the sum over the apertures of a diffraction grating with an integral over x. From the Raman-Nath theory we get for the intensity I of the undeviated beam passing through a traveling sound wave:

$$I = I_o \quad J_o^2 (\nu)$$

$$\nu = \frac{2\pi \Delta n W}{\lambda}$$

where ν is the Raman-Nath parameter,

λ is the wavelength of incident light,

W = the width of sound beam measured along the path traversed by the light,

I_o is the intensity of incident light, and

$J_o (\nu)$ is the zero order Bessel function.

Under the conditions listed above, this intensity is independent of time. In our modulator the light passes through a standing sound wave so one cannot neglect the time dependence of the index of refraction. In this case we have for the intensity of the undeviated beam:

$$I(t) = I_o J_o^2 (\nu \sin \omega^* t) \ .$$

A fourier analysis[15] of I(t) will show that the fundamental frequency of modulation of the light is $f_m = 2 \frac{\omega^*}{2\pi} = \frac{\omega^*}{\pi}$. Modulation at this frequency dominates up to modulation depths on the order of 30% where the second harmonic begins to give appreciable distortion. Second harmonic distortion as produced here might even improve mode-locking.

3.3. Acousto-Optic Modulator and Other Apparatus for Mode-Locking a Dye Laser

The apparatus we used to mode-lock the dye laser consisted of a transducer bonded to a fused quartz block and a RF voltage source with variable frequency and voltage. The fused quartz block was a cube 1.4 cm on a side with two pair of opposite sides optically polished. It is desired that the two sides be parallel to within $\lambda^*/100$ (λ^* = wavelength of sound used) and flat to within $\lambda^*/100$. The two Brewster angle faces through which the light passes should be parallel to 10 min. of arc and flat to 1/5 of the optical wavelength.

The x-cut quartz transducer had a fundamental frequency of

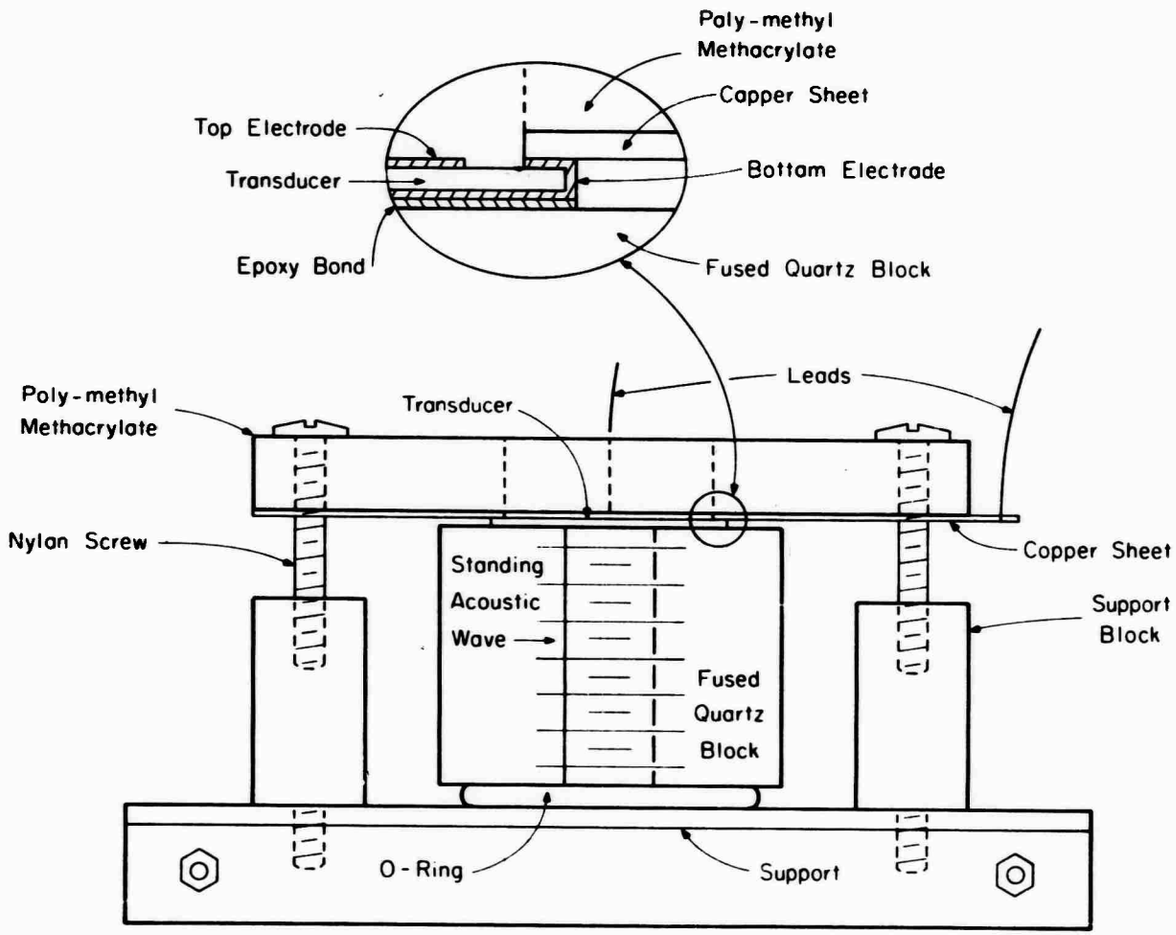

Figure 2. An end view of the acousto-optic modulator showing construction details.

20 MHz and was driven at its third harmonic. It was circular in shape, 1.3 cm in diameter, and it had evaporated gold electrodes. The top electrode was 1 cm in diameter. The bottom electrode covered the whole bottom of the transducer and wrapped around the edge of the transducer for electrical connection from the top. The transducer was bonded to the block with a clear epoxy spread thin with a razor blade. It is desired that the bond thickness be less than $\lambda^*/100$ and be uniform. A copper sheet with a 1.1 cm diameter hole was used to make contact to the lower electrode as shown in figure 2, since the thin gold plating wrapped around the transducer was troublesome when soldered to a small wire lead. It seems probable that the trouble could also have been avoided by evaporating gold right onto the fused quartz block for the lower electrode.

A signal generator providing up to 1.74 V rms into 50 Ω was used as the RF voltage source. It had an output bandwidth of less than 1 KHz and was easily tuned from 58 - 62 MHz with nearly constant output. The voltage was amplified to 20 - 150 V rms by a tuned push-pull tube amplifier. The quartz transducer with a 20 MHz fundamental frequency and a 1 cm diameter top electrode had a capacitance of 22.5 pf. The effective shunt resistance of the acousto-optic modulator was more than 50 KΩ when the drive frequency was a resonant frequency of the transducer and the fused quartz block.

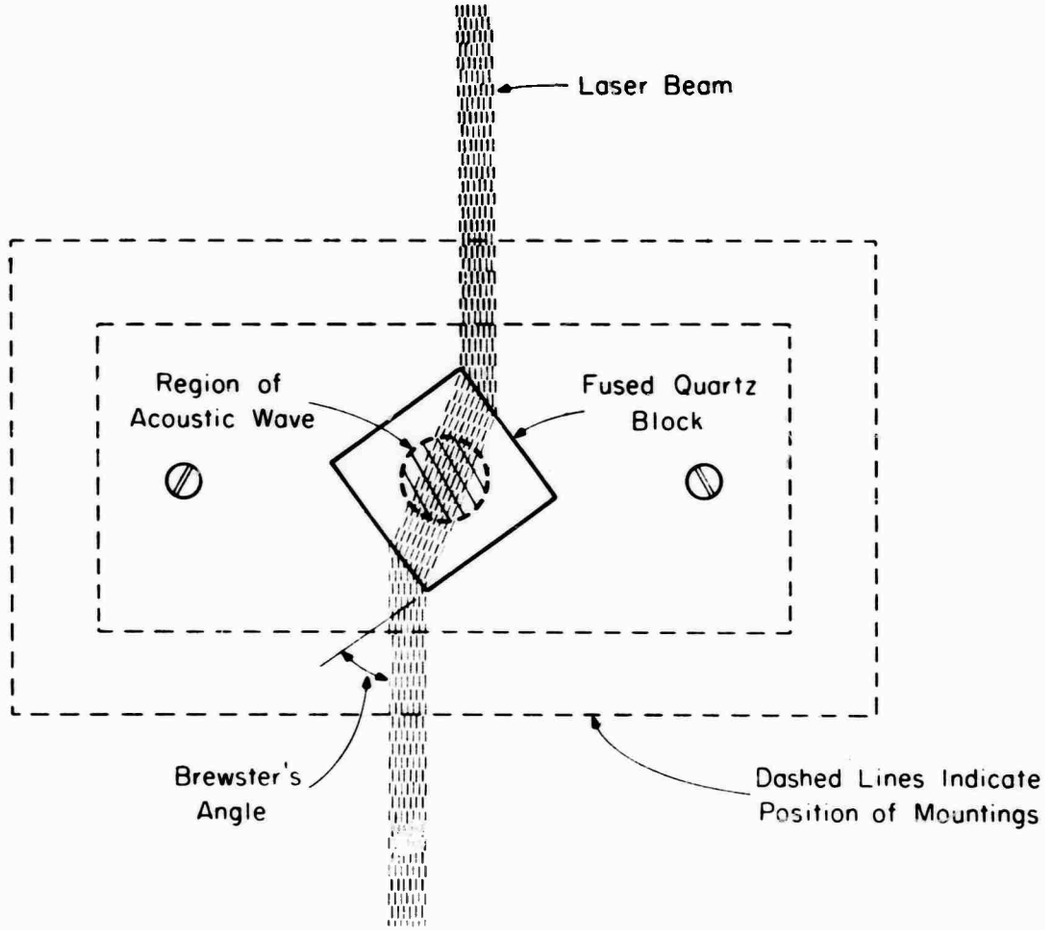

Figure 3. Top view of the acousto-optic modulator showing position of the laser beam.

Thus, undesirable operation would result from putting the modulator at the end of a coaxial cable. The best results were obtained by including the transducer as part of the resonant circuit of a tuned amplifier and mounting the modulator near this amplifier using tinned copper wires less than two inches long. Since one must match three frequencies, it is desirable that the applied frequency be easily adjustable at least over ± 2 MHz.

A cavity of optical length of 1.25 m was used with a modulator drive frequency of 60 MHz. To minimize reflection losses and to avoid resonances in sub-cavities of the system, the modulator was placed at Brewster's angle as shown in figure 3. For the same reason, the AR coated windows of the dye cavity were tilted a few degrees from normal incidence. The modulator was as close to the totally reflecting mirror as possible. The multi-layer, dielectric coated rear mirror reflected 99.9% of light at 580 nm wavelength and had a 2.15 m radius of curvature. Dielectric coated flat mirrors which transmitted for 5% - 20% of the light at 580 nm were used for the output mirror.

The detection equipment consisted of a vacuum biplaner photodiode driving an oscilloscope. The risetime (10% - 90% max. signal) of the photodiode depends on the DC voltage and is calculated to be 0.4 ns with 1000 V DC applied. The oscilloscope has a risetime of 0.28 ns giving a risetime of the system[16] as $\sqrt{0.4^2 + 0.28^2} = 0.48$ ns.

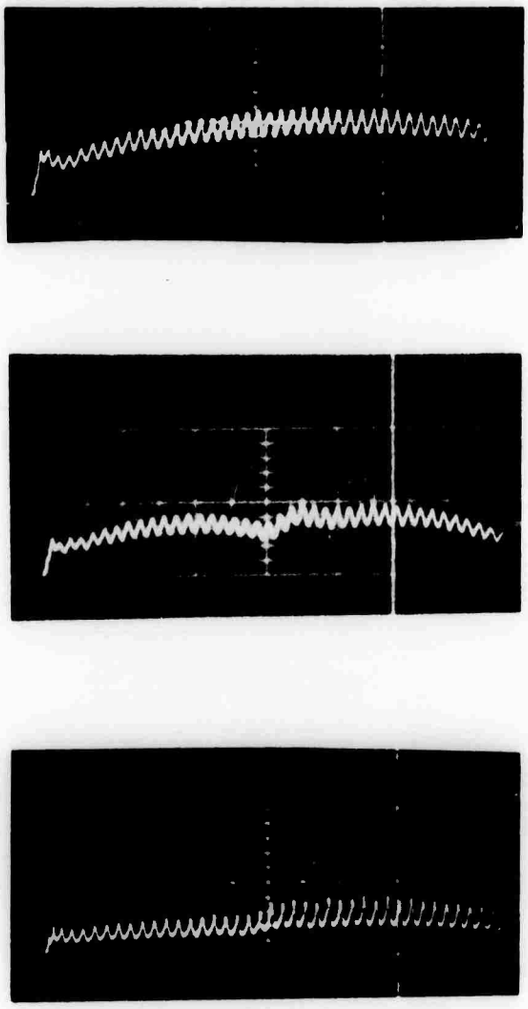

(a)

(b)

(c)

Figure 4. Oscilloscope traces of the dye laser output modulated by two passes through the acousto-optic modulator placed outside the cavity for various voltages applied to the modulator. (50 ns/cm sweep speed)
(a) 60 V rms; (b) 100 V rms; (c) 134 V rms

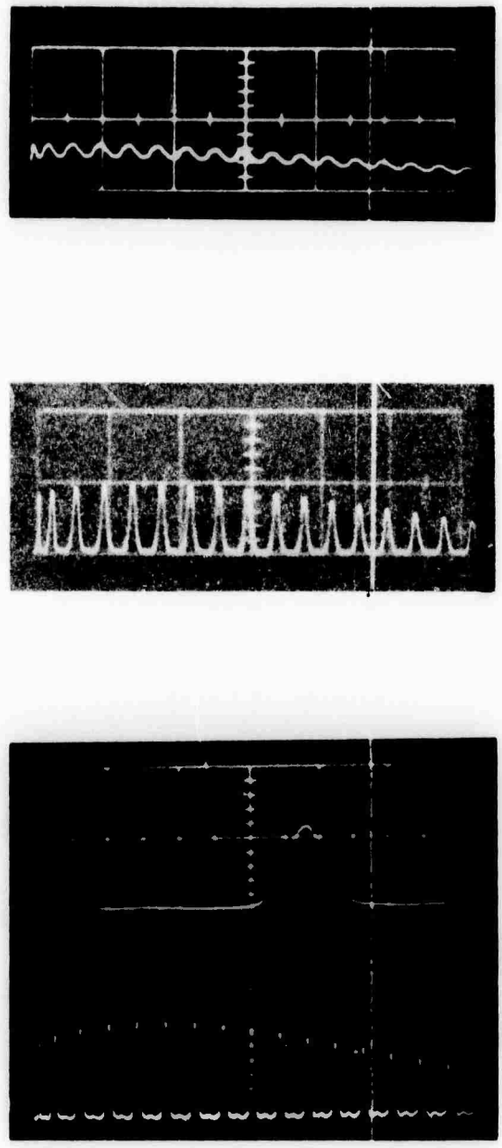

(a)

(b)

(c)

(d)

Figure 5. Oscilloscope traces of the dye laser output with the acousto-optic modulator inside the laser cavity for various voltages applied to the modulator.
(a) 10 V rms, 20 ns/cm; (b) 15 V rms, 20 ns/cm;
(c) 30 V rms, 2 ns/cm; (d) 30 V rms, 20 ns/cm

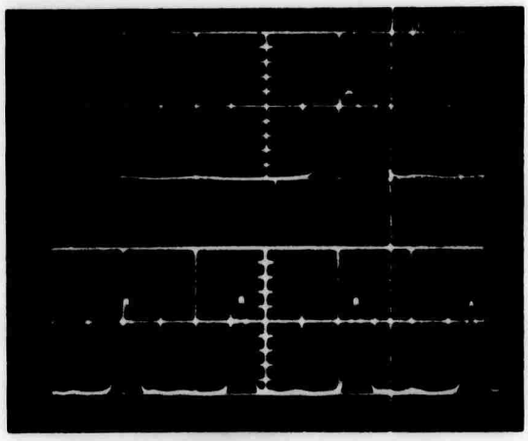

(a)

(b)

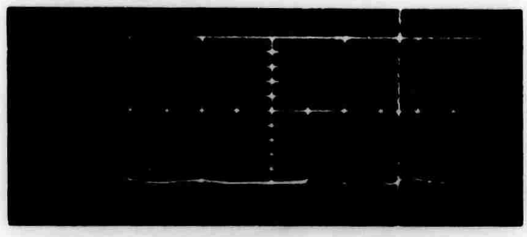

(c)

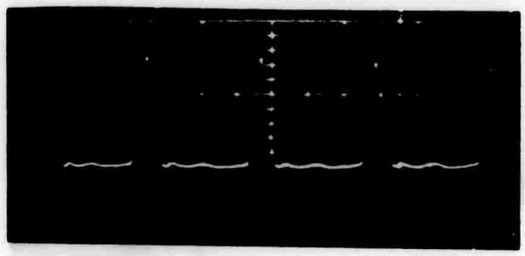

(d)

Figure 6. Oscilloscope traces of the dye laser output with the acousto-optic modulator inside the laser cavity for various voltages applied to the modulator.
(a) 80 V rms, 2 ns/cm; (b) 80 V rms, 5 ns/ cm
(c) 120 V rms, 2 ns/cm; (d) 120 V rms, 5 ns/cm

The photodiode is mounted in a housing with a 50 Ω output impedance. An impedance matching transformer was used to step up the impedance to the 125 Ω impedance of the oscilloscope.

3.4. Results of Using the Acousto-Optic Modulator to Mode-Lock the Dye Laser

The width of the pulses observed on the oscilloscope depended on the frequency of modulation and on the voltage applied to the modulator. Pulse widths of around 1.5 ns (FWHM) were independent of a frequency change of 200 KHz or 0.3%. The depth of modulation of light passing through the modulator increases with the RF voltage applied to the modulator as shown in figure 4. A modulation depth of a few percent per pass through the modulator is sufficient to produce a 50% modulation depth of the light leaving the laser. Modulation depths of 5% per pass produced pulses with widths less than 2 ns (FWHM). Modulation depths of 20% per pass produced pulses with widths less than 0.8 ns (FWHM). Results of the laser output with the modulator inside the cavity are shown in figures 5 and 6.

Pulses as narrow as 0.75 ns (FWHM) have been observed on the oscilloscope as shown in figure 7. The pulse shown has a risetime (10% - 90% max. signal) of 0.54 ns. Since the detection system has a risetime of about 0.5 ns, we believe that the actual light pulses are even narrower than indicated by the oscilloscope. Note that in figure 7

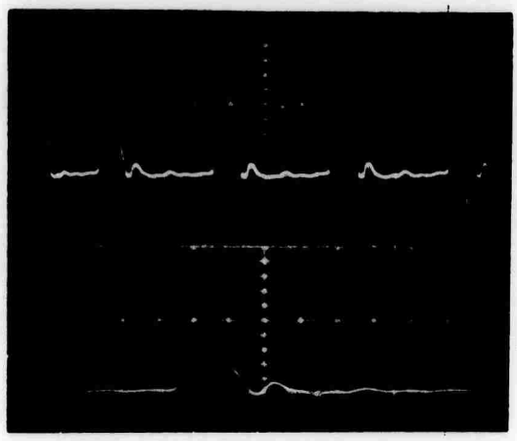

(a)

(b)

Figure 7. Oscilloscope traces of the dye laser output with the acousto-optic modulator inside the laser cavity after critical adjustment of frequency. 100 V rms is applied to the modulator.
(a) sweep speed of 5 ns/cm; (b) sweep speed of 2 ns/cm

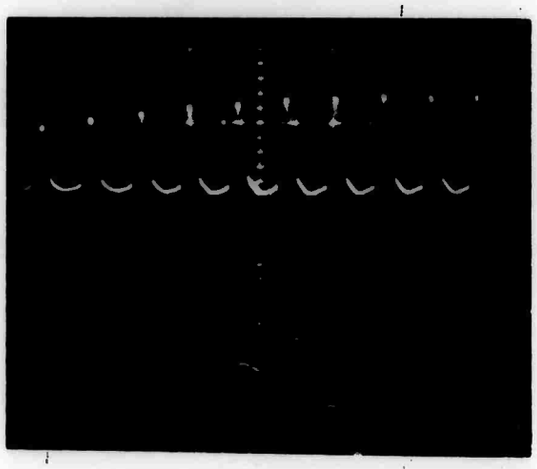

(a)

(b)

Figure 8. Oscilloscope traces of the dye laser output with electro-optic modulator inside the laser cavity one meter long. Approximately 600 V rms on the modulator.
(a) 10 ns/cm; (b) 2 ns/cm

there is a second pulse whose amplitude is about 10% the maximum amplitude of the first pulse. This second pulse is about 1.8 ns after the main pulse. Independent measurements verify that the second pulse is a reflection of the first pulse from an impedance mismatch between the detector housing and the step up transformer.

The optical bandwidth of the dye laser depends on pump energy, dye concentration and mirror reflectivity. Measurements with a spectrometer indicate that the bandwidth for a given pump energy near threshold was about 5 nm with the modulator turned off and also with the modulator turned on producing a train of 1.5 ns pulses.

3.5. Other Methods of Mode-Locking

We have also tried to mode-lock the dye laser with an electro-optic modulator.[17]

Pulses as narrow as 1.8 ns (FWHM) as shown in figure 8 were obtained using this modulator with about 600 V rms applied at 75 MHz with a 1 meter cavity. The half wave voltage for the KD*P crystal we used was about 6 KV.

Pulses less than 1 ns wide were also obtained by placing a bleachable dye inside the cavity near one mirror,[18] but to get these pulses the concentration of the dyes had to be just right. This was very difficult to accomplish. A photograph of the shortest pulses obtained by this technique is shown in figure 9.

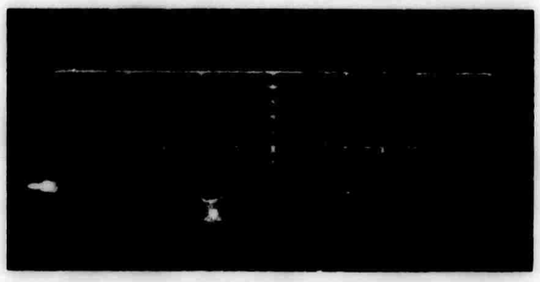

Figure 9. The dye laser output using saturable dye mode-locking, the sweep speed is 2 ns/cm.

References

1. P. P. Sorokin and J. R. Lankard, IBM J. Res. Develop. 11, 148 (1967).
2. B. B. Snavely, Proc. IEEE 57, 1374 (1969).
3. P. W. Smith, Proc. IEEE 58, 1342 (1970).
4. C. M. Ferrar, IEEE J. Quantum Electronics (Corresp.) QE5, 550 (1969).
5. M. DiDomenico, Jr., J. Appl. Phys. 35, 2870 (1964).
6. S. E. Harris, Proc. IEEE 54, 1401 (1966).
7. P. P. Sorokin, J. R. Lankard, V. L. Moruzzi and E. C. Hammond, J. Chem. Phys. 48, 4726 (1968).
8. A. Goldstein and F. H. Dacol, "A Reliable Flashlamp Pump Tunable Organic Dye Laser," Rev. Sci. Inst. 40, pp. 1597-1598 (1969).
9. M. Ciftan, C. F. Luck, C. G. Schafer, and H. Statz, Proc. IRE 49, 960 (1961).
10. G. D. Boyd, R. J. Collins, S. P. S. Porto, A. Yariv and W. A. Hargroves, Phys. Rev. Letters 8, 269 (1962).
11. C. Bowness, D. Missio and T. Ragola, Proc. IRE 50, 1704 (1962).
12. L. E. Hargrove, R. L. Fork, and M. A. Pollack, Appl. Phys. Letters 5, 4 (1964).

13. C. V. Raman and N. S. N. Nath, Proc. Indian Academy of Science 2, 406 (1935).

14. G. W. Willard, J. Acoustical Soc. Amer. 21, 101 (1949).

15. L. E. Hargrove, IEEE Trans. on Sonics and Ultrasonics, SU14, 33 (1967).

16. A. T. Starr, "Radio and Radar Techniques" p. 450 (Pitman Publishing Corporation, 1953).

17. E. L. Steele, "Optical Lasers in Electronics" p. 58, (John Wiley and Sons, Inc., 1968).

18. D. J. Bradley, A. J. F. Durrant, F. O'Neill and B. Sutherland, Phys. Letters 30A, 535 (1969).

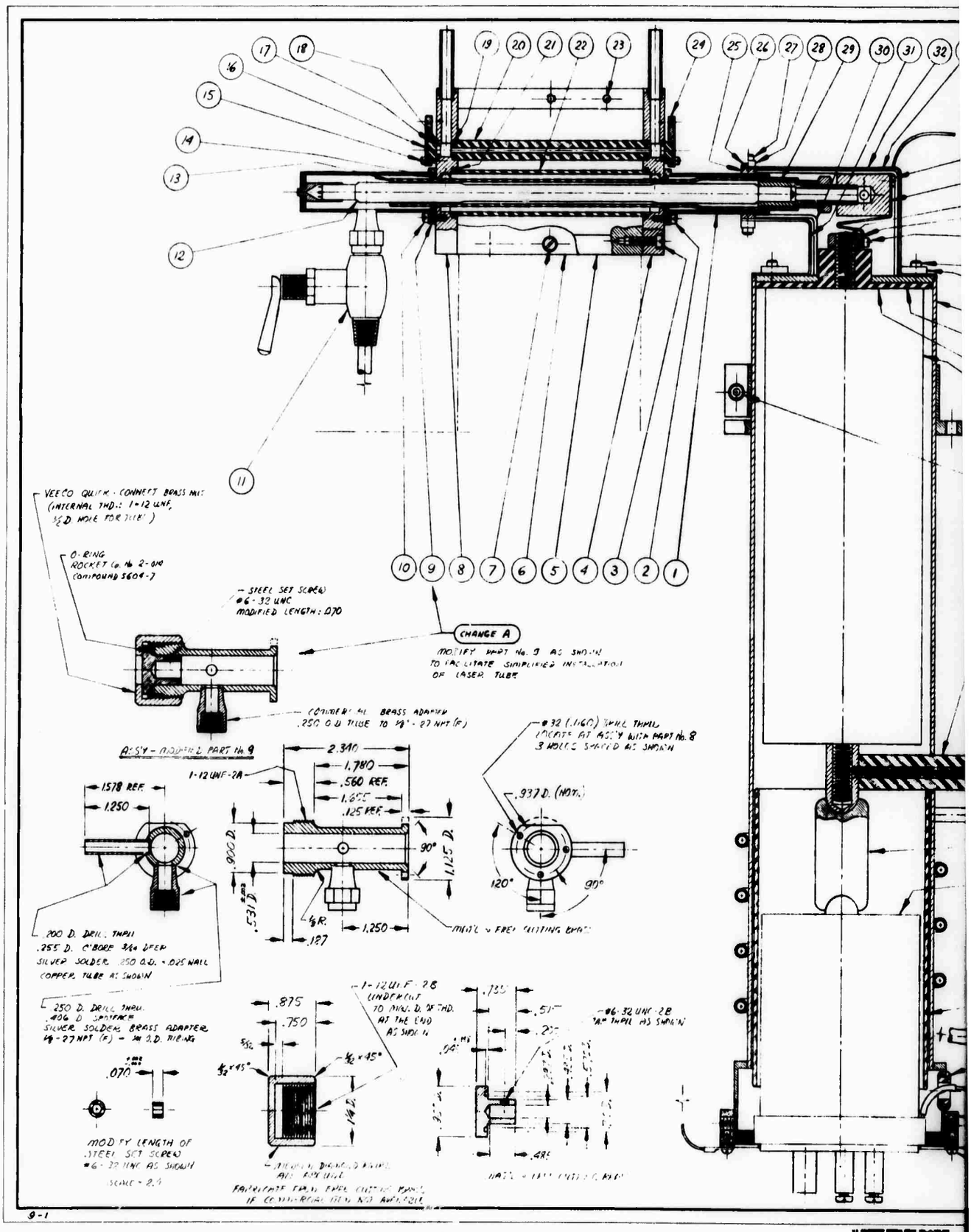
VEECO QUICK-CONNECT BRASS NIP
(INTERNAL THD.: 1-12 UNF,
5/8 D. HOLE FOR TUBE)
O-RING
ROCKET Co. No 2-019
COMPOUND 5604-7
STEEL SET SCREW
#6-32 UNC
MODIFIED LENGTH: .070
CHANGE A
MODIFY PART No. 9 AS SHOWN
TO FACILITATE SIMPLIFIED INSTALLATION
OF LASER TUBE
CONTINUOUS BRASS ADAPTER
.250 O.D. TUBE TO 1/4"-27 NPT (F)
ASS'Y - MODIFIED PART No. 9
2.310
1.780
.560 REF.
1.625
.125 REF.
1-12 UNF-2A
1.578 REF.
1.250
.937 D. (NOM.)
120°
90°
.125 D.
.531 D.
1/8 R.
1.250
.127
.200 D. DRILL THRU
.255 D. C'BORE 3/64 DEEP
SILVER SOLDER .250 O.D. x .025 WALL
COPPER TUBE AS SHOWN
.250 D. DRILL THRU
.406 D. SPOTFACE
SILVER SOLDER BRASS ADAPTER
1/4-27 NPT (F) - 1/4 O.D. TUBING
.070
MODIFY LENGTH OF
STEEL SET SCREW
#6-32 UNC AS SHOWN
SCALE = 2:1
.875
.750
5/32
1/32 x 45°
1/4 D.
1-12 UNF-2B
UNDERCUT
TO MIN. D. OF THD.
AT THE END
AS SHOWN
.735
.51
.25
.48
#6-32 UNC-2B
THRU THREAD AS SHOWN
9-1

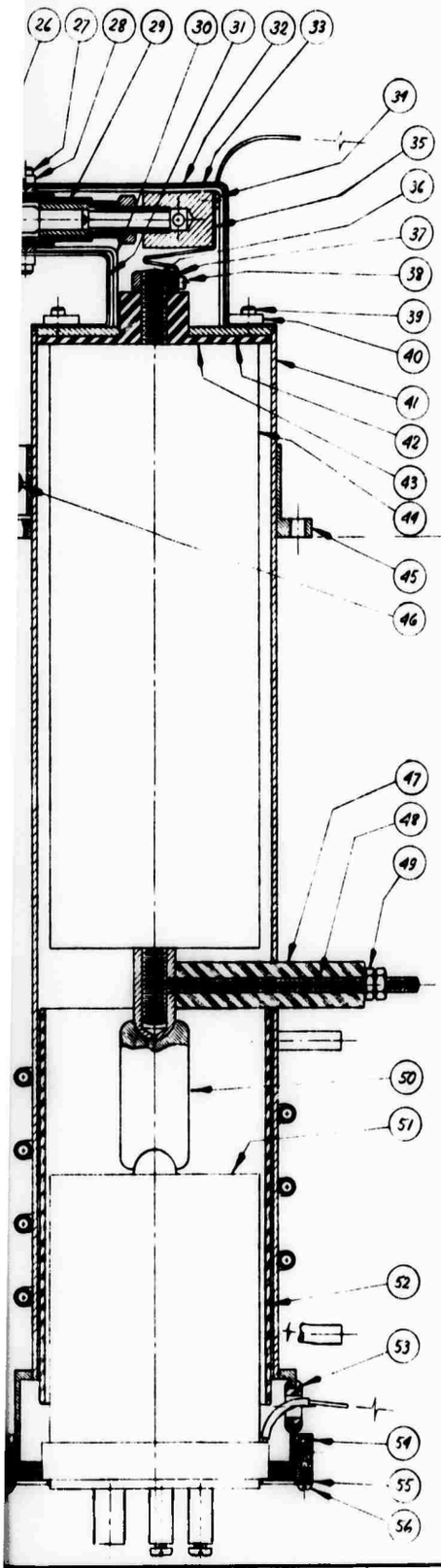

ORIGINAL DATE OF DRAWING	FEB 4, 1973	
REVISIONS		
NO	S C H	CHANGES	DATE
1	A	SHEET No 3 MODIFIED MAT'L TO MIL SPEC. 3 (MIL 3)	JULY 28/70
2			
3			
4			

LIST OF PARTS

PARTS NO	NOMENCLATURE	No. REQ'D
*56	BRASS SCREW, #4-40 UNC ROUND HD., 1/4" LG	12
55	CONTACT SPRING MAT'L - BERYLLIUM COPPER	1
54	NUT, CONTACT SPRING MAT'L - FREE CUTTING BRASS	1
*53	RUBBER GROMMET (FOR 1/4" D. HOLE)	1
52	INSULATOR MAT'L - "PYREX" GLASS	1
*51	H THYRATRON EG & G 7322/1802	1
50	CONNECTOR CAP TO THYRATRON MAT'L - STAINLESS STEEL 304	1
*49	BRASS HEX NUT #10-32 UNF	2
*48	BRASS HEADLESS CONTACT SCREW #10-32 UNF, 3/8" LG.	1
47	INSULATOR MAT'L - "TEFLON"	1
*46	STEEL SCREW, #10-32 UNF HEX SOCKET HD., 1/2 LG	1
45	MOUNTING CLAMP MAT'L - FREE CUTTING BRASS	1
*44	CAP 0.2 μf CONDENSER PROD #EB 204-20 MP	1
43	INSULATOR MAT'L - "TEFLON"	1
42	TOP COVER MAT'L - FREE CUTTING BRASS	1
41	SHIELD CAP & THYRATRON MAT'L - FREE CUTTING BRASS	1
40	CONDUCTOR CLAMP MAT'L - FREE CUTTING BRASS	2
*39	STEEL SCREW, #4-40 UNC HEX SOCKET HEAD, 1/4" LONG	4
*38	STEEL SCREW, #4-40 UNC HEX SOCKET HEAD, 1/2" LONG	1
*37	BRASS HEX. NUT 3/8 - 16 UNC	1
*36	STEEL ROLL PIN 1/8" DIA. x 1/2" LONG	1
35	BUSBAR CONDUCTOR MAT'L - COPPER	1
*34	BRASS SCREW #4-40 UNC BINDING HEAD, 1/4" LONG	2
33	INSULATOR MAT'L - "TEFLON"	1
32	BUSBAR CONDUCTOR MAT'L - COPPER	1
31	BUSBAR CONDUCTOR MAT'L - COPPER	1

*) STOCK PARTS

PARTS NO	NOMENCLATURE	No. REQ'D
30	INSULATOR MAT'L - "TEFLON"	1
*29	XENON CORP WATER COOLING ADAPTER FOR LAMP 701 AR	1
28	CONDUCTOR CLAMP MAT'L - FREE CUTTING BRASS	2
*27	STEEL SCREW, #4-40 UNC HEX SOCKET HEAD 1/4" LONG	4
*26	STEEL SCREW #4-40 UNC HEX SOCKET HEAD 5/8" LONG	1
25	CLAMP ELECT. RETURN MAT'L - FREE CUTTING BRASS	1
24	MIRROR HOLDER MAT'L - FREE CUTTING BRASS	1
*23	ALIGNMENT PIN MAT'L - STEEL .1250 D x 1/2" LG.	2
22	LAMP FILTER JACKET MAT'L - QUARTZ	1
*21	O-RING (COMPOUND S604-7) ROCKET COMP. No 2-018	2
20	DYE CELL TUBE MAT'L - QUARTZ	1
*19	O-RING (COMPOUND S604-7) ROCKET COMP. No. 2-010	2
*18	O-RING (COMPOUND S604-7) ROCKET COMP. No 2-008	2
17	OUTPUT MIRROR MAT'L - 0" CAL QUARTZ	2
16	MIRROR HOLDER MAT'L - FREE CUTTING BRASS	1
*15	BRASS SCREW, #3-56 UNF FILLISTER HEAD 3/8" LONG	6
*14	O-RING (COMPOUND S604-7) ROCKET COMP. No. 2-014	3
13	LAMP WATER JACKET MAT'L - QUARTZ	1
*12	FLASH LAMP XENON CORP. #701 AR	1
*11	PET COCK VALVE 1/8 - 27 NPT (use optional)	1
*10	BRASS SCREW #4-40 UNC FILLISTER HEAD, 1/4" LONG	3
9	LAMP SHIELD & ELEC. RETURN MAT'L - FREE CUTTING BRASS	1
8	CAVITY END PLATE (LEFT H.) MAT'L - ALUMINUM	1
*7	BRASS SCREW #8-32 UNF FILLISTER HEAD 2" LONG	2
6	CAVITY REMOVABLE HALF-SECT. MAT'L - ALUMINUM	1
5	CAVITY NON-REMOVABLE HALF-SECT MAT'L - ALUMINUM	1
4	CAVITY END PLATE (RIGHT H.) MAT'L - ALUMINUM	1
*3	BRASS SCREW #6-32 UNC FILLISTER HEAD 3/8" LONG	4
*2	BRASS SCREW #4-40 UNC FILLISTER HEAD 1/4" LONG	3
1	LAMP SHIELD & ELEC. RETURN MAT'L - FREE CUTTING BRASS	

NATIONAL BUREAU OF STANDARDS
ROCKY MOUNTAIN LABORATORY, BOULDER, COLORADO, 80302

ASHLEY DYE LASER SYSTEM
FOR RESEARCH

MODEL I.	TYPE	SCALE 1/1
DIMENSIONS IN INCHES (Unless otherwise specified)	DRAFTSMAN Arthur Lechner	CHECKED
TOLERANCES (Unless otherwise specified)	PROJECT ENGR Dr J.A. Jennings	PROJECT ENGR
DECIMALS ± .005 FRACTIONS ± .015 ANGLES ± 1/2°	SUBMITTED BY	CHIEF ENGR
DO NOT SCALE THIS PRINT	ESTIMATED BY	CHIEF ENGINEER
DWG. SIZE 27/08	THIS PRINT ISSUED	APPROVED BY / CHIEF DIV

Z - 1/342 D

SHEET 1 OF 5

232

B

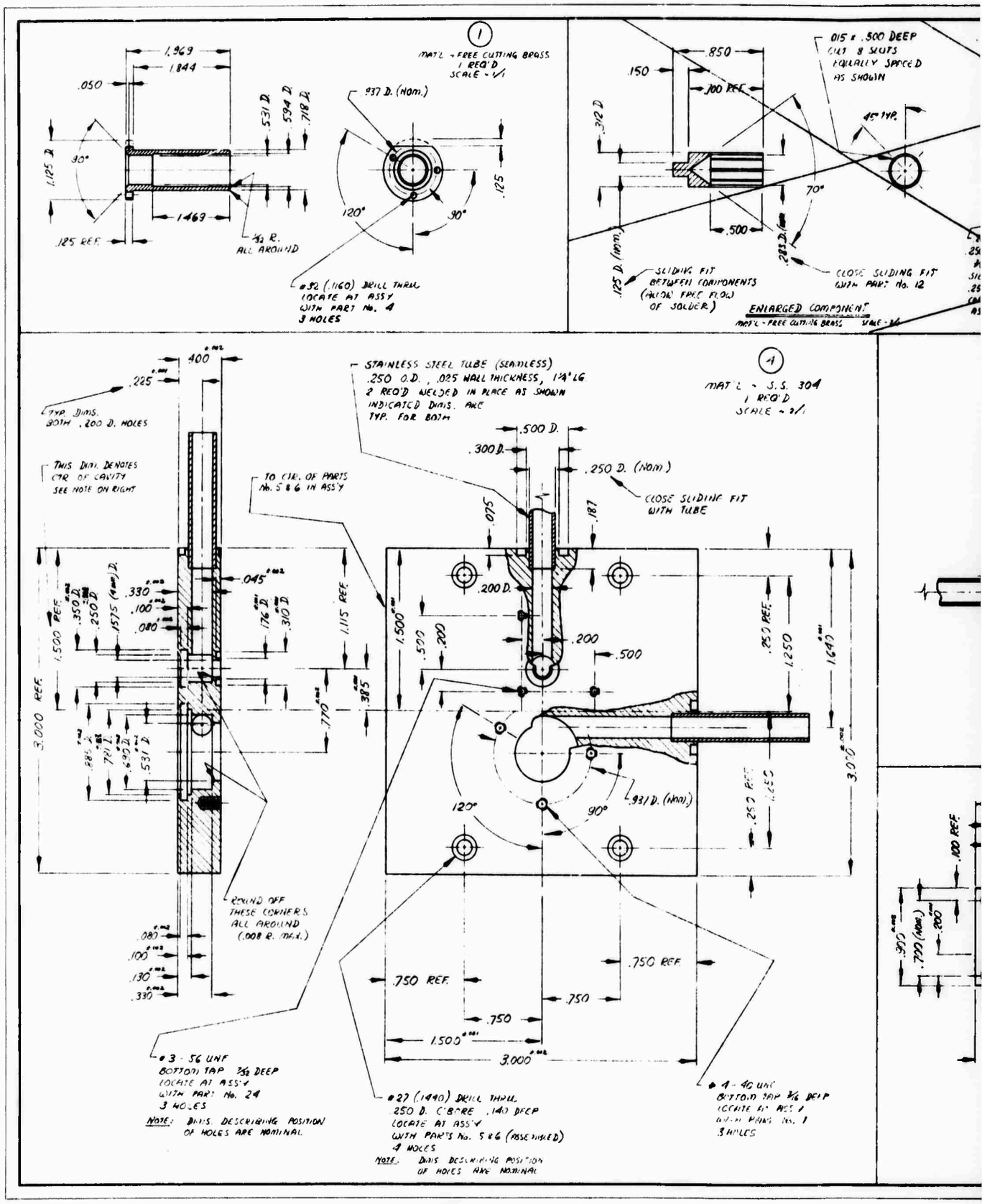
1
MAT'L - FREE CUTTING BRASS
1 REQ'D
SCALE - 1/1
1.969
1.844
.050
.531 D.
.594 D.
.718 D.
1.125 D.
90°
1.469
.125 REF.
1/32 R. ALL AROUND
.937 D. (NOM.)
.125
120°
90°
#32 (.1160) DRILL THRU
LOCATE AT ASS'Y
WITH PART No. 4
3 HOLES
.850
.150
.100 REF.
.312 D.
.015 x .500 DEEP
CUT 8 SLOTS
EQUALLY SPACED
AS SHOWN
45° TYP.
70°
.500
.125 D. (NOM.)
.281 D.
SLIDING FIT
BETWEEN COMPONENTS
(ALLOW FREE FLOW
OF SOLDER)
CLOSE SLIDING FIT
WITH PART No. 12
ENLARGED COMPONENT
MAT'L - FREE CUTTING BRASS
4
MAT'L - S.S. 304
1 REQ'D
SCALE - 2/1
STAINLESS STEEL TUBE (SEAMLESS)
.250 O.D., .025 WALL THICKNESS, 1 1/4" LG.
2 REQ'D WELDED IN PLACE AS SHOWN
INDICATED DIMS. ARE
TYP. FOR BOTH
.400
.225
TYP. DIMS.
BOTH .200 D. HOLES
THIS DIM. DENOTES
CTR. OF CAVITY
SEE NOTE ON RIGHT
TO CTR. OF PARTS
No. 5 & 6 IN ASS'Y
.500 D.
.300 D.
.250 D. (NOM.)
CLOSE SLIDING FIT
WITH TUBE
.075
.187
.045
.330
.100
.080
.350 D.
.250 D.
.1575 (4 mm) D.
.176 D.
.310 D.
1.115 REF.
1.500 REF.
3.000 REF.
.200 D.
.200
.500
.500
.385
.770
.250 REF.
1.250
1.640
3.000
.250 REF.
1.250
.931 D. (NOM.)
120°
90°
ROUND OFF
THESE CORNERS
ALL AROUND
(.008 R. MAX.)
.080
.100
.130
.330
.750 REF.
.750 REF.
.750
.750
1.500
3.000
#3 - 56 UNF
BOTTOM TAP 3/32 DEEP
LOCATE AT ASS'Y
WITH PART No. 24
3 HOLES
NOTE: DIMS. DESCRIBING POSITION
OF HOLES ARE NOMINAL
#27 (.1440) DRILL THRU
.250 D. C'BORE .140 DEEP
LOCATE AT ASS'Y
WITH PARTS No. 5 & 6 (ASSEMBLED)
4 HOLES
NOTE: DIMS. DESCRIBING POSITION
OF HOLES ARE NOMINAL
#4 - 40 UNF
BOTTOM TAP 3/16 DEEP
LOCATE AT ASS'Y
WITH PARTS No. 1
3 HOLES
.100 REF.
.200
.700 (NOM.)
.500

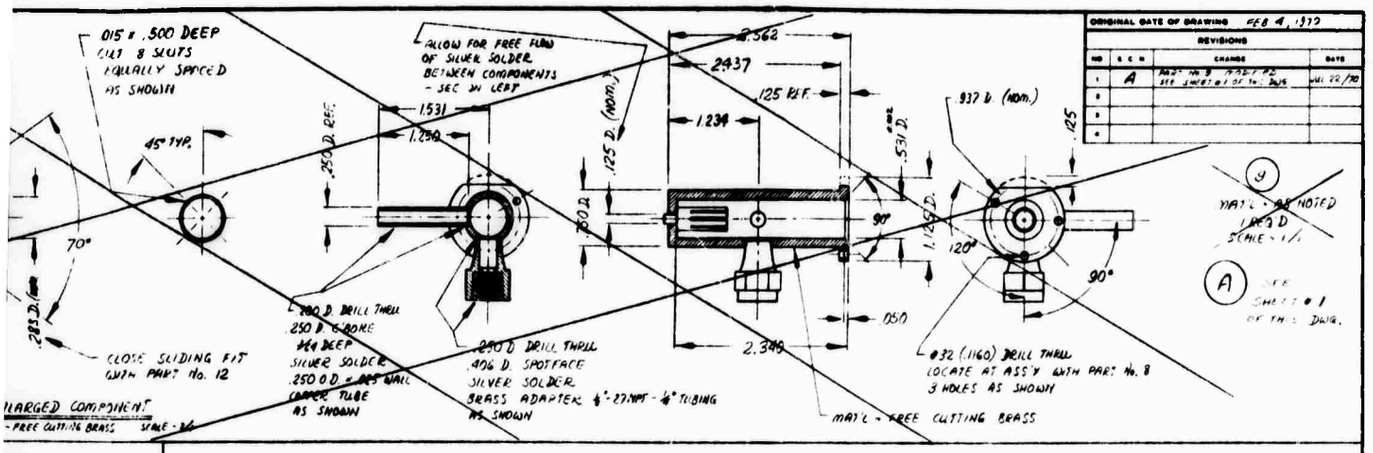

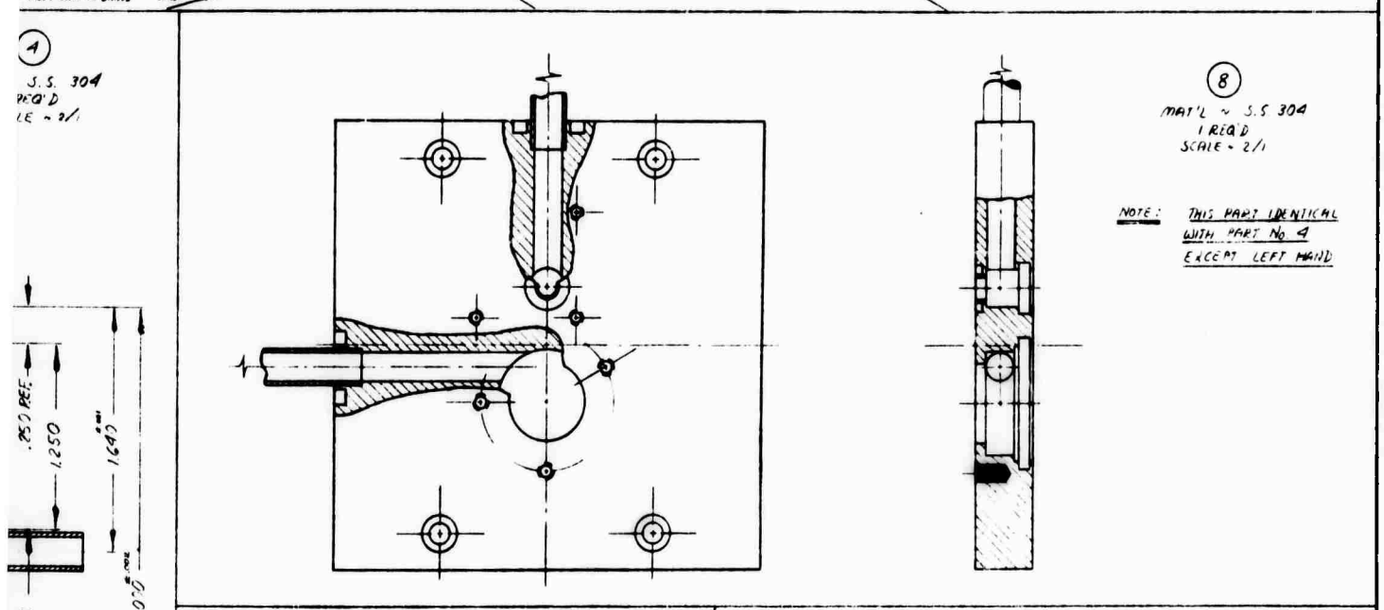

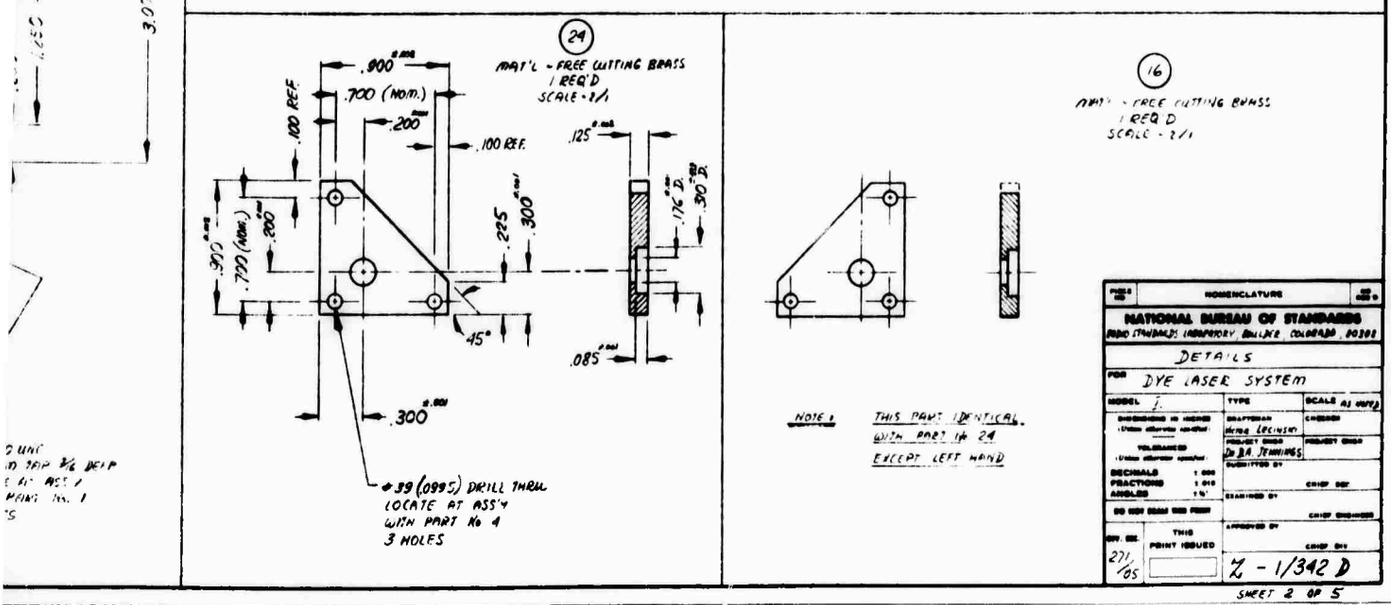

NOMENCLATURE

NATIONAL BUREAU OF STANDARDS
RADIO STANDARDS LABORATORY, BOULDER COLORADO, 80302

DETAILS

FOR DYE LASER SYSTEM

MODEL 1 | TYPE | SCALE AS NOTED

DRAFTSMAN Verna Lockings | CHECKED

PROJECT ENGR Dr D.A. Jennings | PROJECT ENGR

SUBMITTED BY | CHIEF ENG

EXAMINED BY | CHIEF ENGINEER

APPROVED BY | CHIEF DIV

DECIMALS ± .000
FRACTIONS ± .010
ANGLES ± 1/2°

DO NOT SCALE THIS PRINT

THIS PRINT ISSUED

REV. NO. 271/05

Z - 1/342 D

SHEET 2 OF 5

252

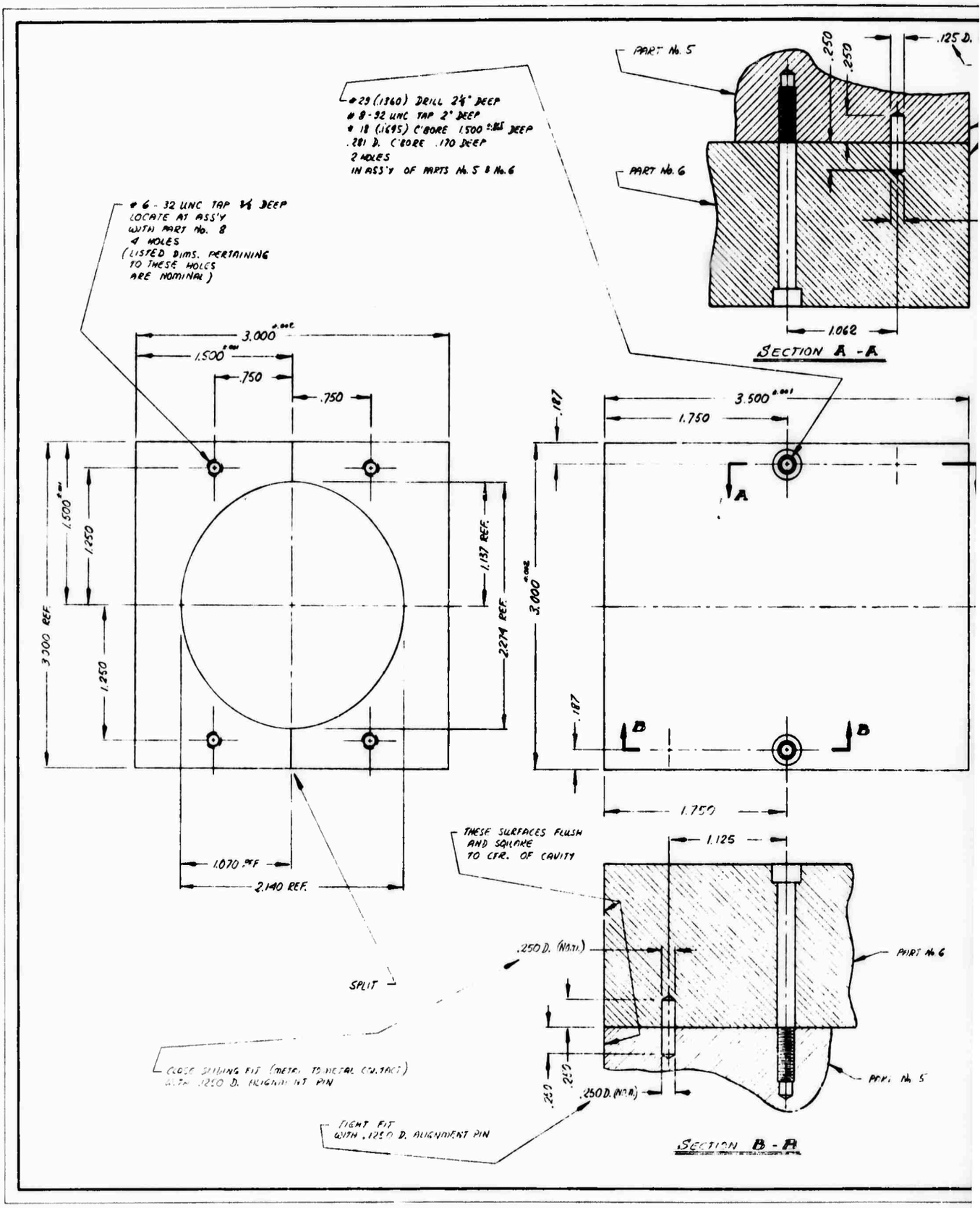
PART No. 5
PART No. 6
.250
.250
.125 D.
1.062
SECTION A - A
#29 (.1360) DRILL 2¼" DEEP
8-32 UNC TAP 2" DEEP
18 (.1695) C'BORE 1.500 DEEP
.281 D. C'BORE .170 DEEP
2 HOLES
IN ASS'Y OF PARTS No. 5 & No. 6
6 - 32 UNC TAP ¾ DEEP
LOCATE AT ASS'Y
WITH PART No. 8
4 HOLES
(LISTED DIMS. PERTAINING
TO THESE HOLES
ARE NOMINAL)
3.000
1.500
.750
.750
1.500
1.250
1.250
3.300 REF.
1.137 REF.
2.274 REF.
1.070 REF
2.140 REF.
3.500
1.750
.187
3.000
.187
A
B
B
1.750
THESE SURFACES FLUSH
AND SQUARE
TO CTR. OF CAVITY
1.125
.250 D. (NOM.)
PART No. 6
SPLIT
.250
.250
.250 D. (NOM.)
PART No. 5
CLOSE SLIDING FIT (METAL TO METAL CONTACT)
WITH .1250 D. ALIGNMENT PIN
TIGHT FIT
WITH .1250 D. ALIGNMENT PIN
SECTION B - B

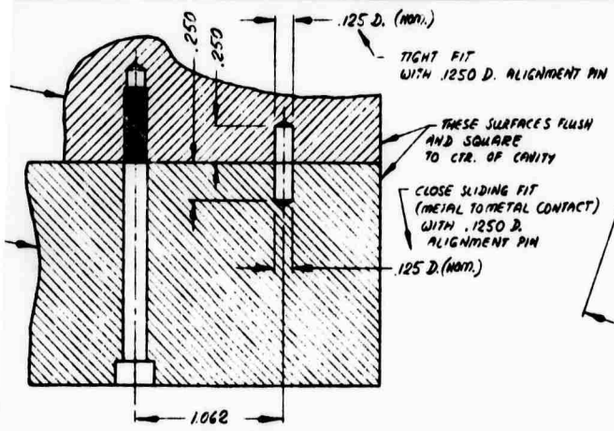

SECTION A - A

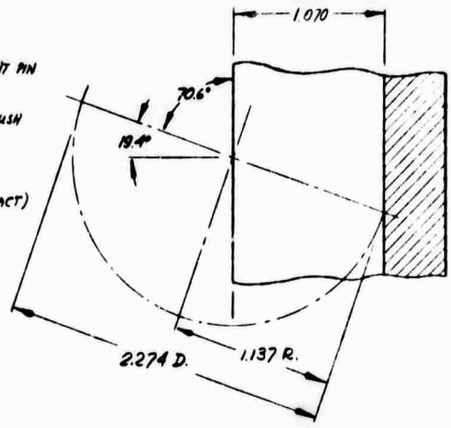

DETAIL SHOWING METHOD OF CUTTING REQ'D CURVATURE

ORIGINAL DATE OF DRAWING FEB 4 1970			
REVISIONS			
NO	C E N	CHANGE	DATE
1			
2			
3			
4			

(5 & 6)

MAT'L - ALUMINUM 6061
1 OF EA. REQ'D
SCALE - 2/1

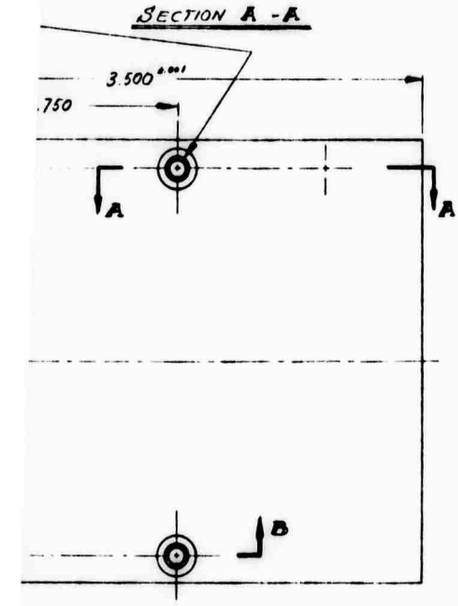

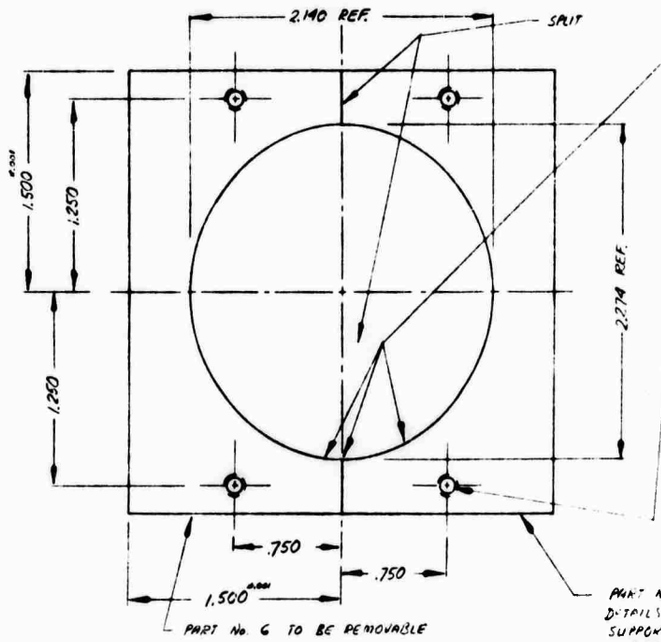

MIRROR FINISH CURVATURE ALL AROUND FULL LENGTH ASSURE SMOOTH SURFACE AT POINT OF SPLIT - NO RIDGES OR OPEN SPACES - CRITICAL REQUIREMENT AT FINAL ASS'Y

#6 - 32 UNC TAP 3/8 DEEP LOCATE AT ASS'Y WITH PART No. 4 4 HOLES (LISTED DIMS. PERTAINING TO THESE HOLES ARE NOMINAL)

PART No. 5 TO BE STATIONARY DETAILS OF MOUNTING ON SUITABLE SUPPORT NOT SHOWN - DEPEND ON EXISTING CONDITIONS - CONSULT PROJECT ENGINEER

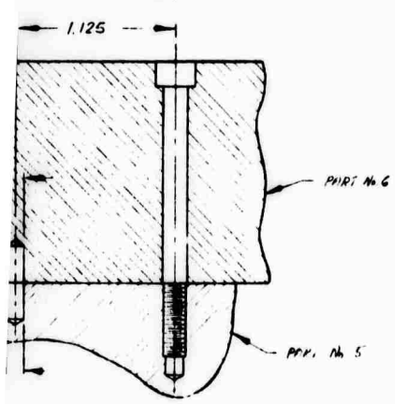

SECTION B - B

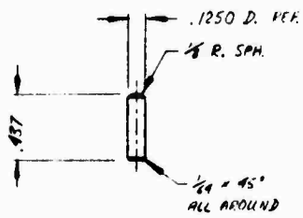

DETAIL ALIGNMENT PIN (23)

MAT'L - .1250 D. DRILL ROD
2 REQ'D

NOMENCLATURE	
NATIONAL BUREAU OF STANDARDS	
DETAILS	
FOR DYE LASER SYSTEM	
MODEL I	TYPE / SCALE AS NOTED
DRAFTSMAN 1/64 FOR LETTERING	CHECKED
PROJECT ENGR Dr D.A. JENNINGS	PROJECT ENGR
SUBMITTED BY	CHIEF DIV
EXAMINED BY	CHIEF ENGINEER
APPROVED BY	CHIEF DIV
THIS PRINT ISSUED	X - 1/342 D

SHEET 3 OF 5

27a

B

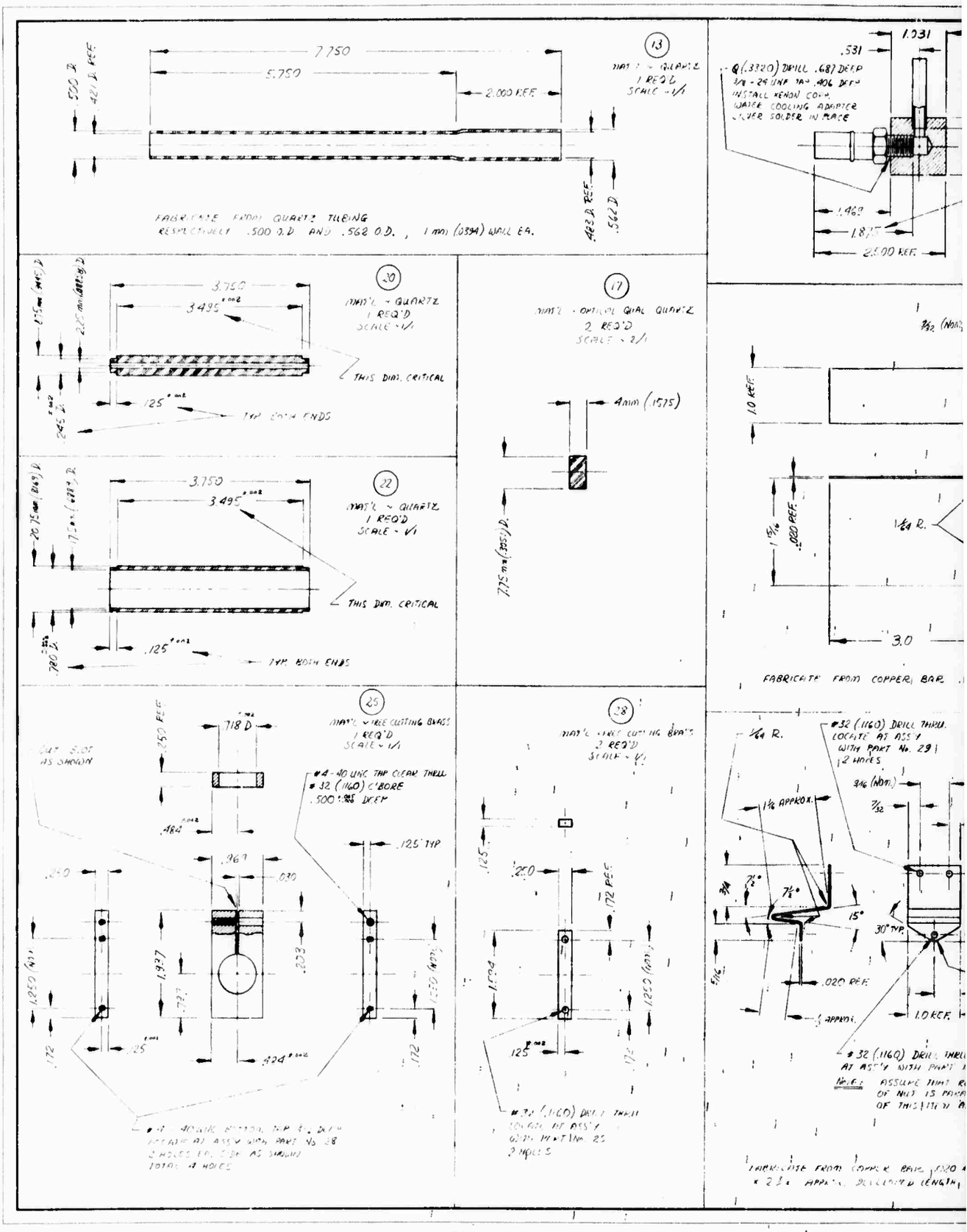
13
MAT'L - QUARTZ
1 REQ'D
SCALE - 1/1
7.750
5.750
2.000 REF.
.500 D.
.421 D. REF.
.483 D. REF.
.562 D.
FABRICATE FROM QUARTZ TUBING
RESPECTIVELY .500 O.D. AND .562 O.D. , 1 mm (.0394) WALL EA.
Q (.3320) DRILL .68 DEEP
3/8 - 24 UNF TAP .406 DEEP
INSTALL XENON CONN.
WATER COOLING ADAPTER
SILVER SOLDER IN PLACE
1.031
.531
1.469
1.875
2.500 REF.
20
MAT'L - QUARTZ
1 REQ'D
SCALE - 1/1
3.750
3.495
THIS DIM. CRITICAL
.125
TYP. BOTH ENDS
17
MAT'L - OPTICAL QUAL QUARTZ
2 REQ'D
SCALE - 2/1
4mm (.1575)
7.75 mm (.305) D.
22
MAT'L - QUARTZ
1 REQ'D
SCALE - 1/1
3.750
3.495
THIS DIM. CRITICAL
.125
TYP. BOTH ENDS
25
MAT'L - FREE CUTTING BRASS
1 REQ'D
SCALE - 1/1
CUT SLOT AS SHOWN
.250 REF.
.718 D.
.484
#4-40 UNC TAP CLEAR THRU
#32 (.1160) C'BORE
.500 DEEP
.125 TYP
.367
.030
.250
1.937
.737
.203
1.250 (NOM.)
1.370 (NOM.)
.172
.125
.424
28
MAT'L - FREE CUTTING BRASS
2 REQ'D
SCALE - 1/1
.125
.250
.172 REF.
1.704
1.250 (NOM.)
.125
.172
#32 (.1160) DRILL THRU
LOCATE AT ASS'Y
WITH PART No. 25
2 HOLES
1/64 R.
#32 (.1160) DRILL THRU.
LOCATE AT ASS'Y
WITH PART No. 29
2 HOLES
3/16 (NOM.)
3/32
1 1/2 APPROX.
3/4
7 1/2°
15°
30° TYP.
5/16
.020 REF.
1/2 APPROX.
1.0 REF.
1.0 REF.
1/64 R.
.080 REF.
3.0
FABRICATE FROM COPPER BAR

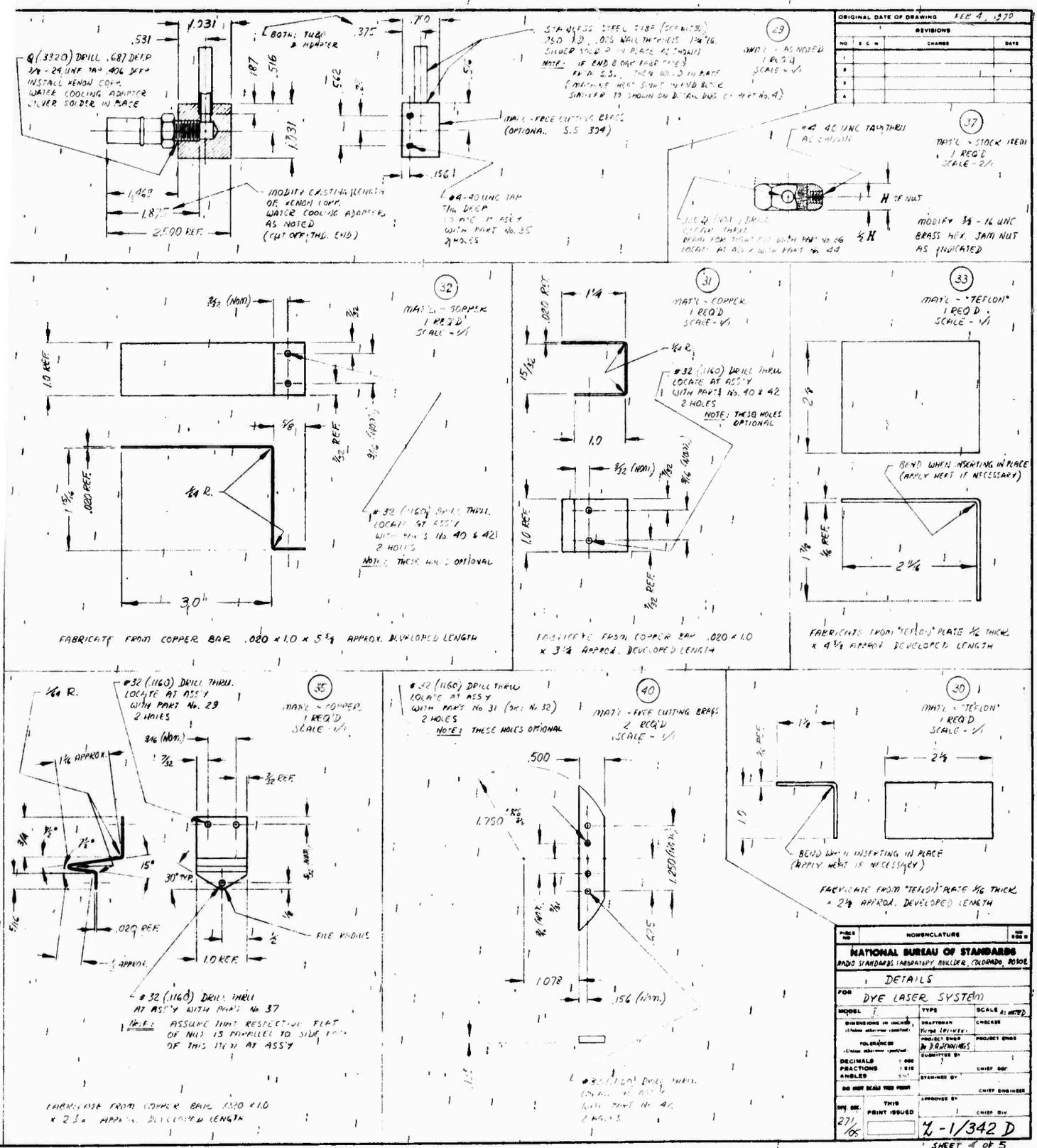
ORIGINAL DATE OF DRAWING DEC 4, 1970
REVISIONS
NO | S C N | CHANGE | DATE
Q (.3320) DRILL .687 DEEP
3/8 - 24 UNF TAP .406 DEEP
INSTALL XENON COMP.
WATER COOLING ADAPTER
SILVER SOLDER IN PLACE
BOTH: TUBE & ADAPTER
STAINLESS STEEL TUBE (SEAMLESS)
.250 I.D., .035 WALL THICKNESS 304 SS
SILVER SOLDER IN PLACE AS SHOWN
NOTE: IF END & ONE PIECE
FROM S.S., THEN WELD IN PLACE
(MACHINE HEAT SINK IN END BLOCK
SIMILAR TO SHOWN ON DETAIL DWG OF PART No. 4)
(29)
MAT'L - AS NOTED
1 REQ'D
SCALE - 1/1
MAT'L - FREE CUTTING BRASS
(OPTIONAL S.S. 304)
#4-40 UNC TAP
THRU DEEP
LOCATE AT ASS'Y
WITH PART No. 35
2 HOLES
MODIFY EXISTING LENGTH
OF XENON COMP.
WATER COOLING ADAPTER
AS NOTED
(CUT OFF THD. END)
2.500 REF.
#4 40 UNC TAP THRU
AS SHOWN
(37)
MAT'L - STOCK ITEM
1 REQ'D
SCALE - 2/1
H OF NUT
1/2 H
MODIFY 3/8 - 16 UNC
BRASS HEX. JAM NUT
AS INDICATED
(32)
MAT'L - COPPER
1 REQ'D
SCALE - 1/1
1.0 REF.
.020 REF.
1/64 R.
#32 (.1160) DRILL THRU
LOCATE AT ASS'Y
WITH PARTS No. 40 & 42
2 HOLES
NOTE: THESE HOLES OPTIONAL
3.0
FABRICATE FROM COPPER BAR .020 x 1.0 x 5 3/4 APPROX. DEVELOPED LENGTH
(31)
MAT'L - COPPER
1 REQ'D
SCALE - 1/1
1/64 R.
1.0
FABRICATE FROM COPPER BAR .020 x 1.0
x 3 3/4 APPROX. DEVELOPED LENGTH
(33)
MAT'L - "TEFLON"
1 REQ'D
SCALE - 1/1
BEND WHEN INSERTING IN PLACE
(APPLY HEAT IF NECESSARY)
2 1/6
FABRICATE FROM "TEFLON" PLATE 1/16 THICK
x 4 3/4 APPROX. DEVELOPED LENGTH
(35)
MAT'L - COPPER
1 REQ'D
SCALE - 1/1
1/64 R.
#32 (.1160) DRILL THRU
LOCATE AT ASS'Y
WITH PART No. 29
2 HOLES
1/16 APPROX.
15°
30° TYP.
.029 REF.
FILE RADIUS
1.0 REF.
#32 (.1160) DRILL THRU
AT ASS'Y WITH PART No. 37
NOTE: ASSUME THAT RESTRICTING FLAT
OF NUT IS PARALLEL TO SIDE FACE
OF THIS ITEM AT ASS'Y
FABRICATE FROM COPPER BAR .020 x 1.0
x 2 3/4 APPROX. DEVELOPED LENGTH
#32 (.1160) DRILL THRU
LOCATE AT ASS'Y
WITH PART No. 31 (SIM. No. 32)
2 HOLES
NOTE: THESE HOLES OPTIONAL
(40)
MAT'L - FREE CUTTING BRASS
2 REQ'D
SCALE - 1/1
.500
1.750
1.250 (NOM.)
1.078
.156 (NOM.)
#4-40 (.0890) DRILL THRU
LOCATE AT ASS'Y
WITH PART No. 42
2 HOLES
(30)
MAT'L - "TEFLON"
1 REQ'D
SCALE - 1/1
2 1/4
BEND WHEN INSERTING IN PLACE
(APPLY HEAT IF NECESSARY)
FABRICATE FROM "TEFLON" PLATE 1/16 THICK
x 2 1/4 APPROX. DEVELOPED LENGTH
PIECE NO | NOMENCLATURE | NO REQ'D
NATIONAL BUREAU OF STANDARDS
RADIO STANDARDS LABORATORY, BOULDER, COLORADO, 80302
DETAILS
FOR DYE LASER SYSTEM
MODEL I
TYPE
SCALE AS NOTED
DIMENSIONS IN INCHES
DRAFTSMAN
CHECKER
PROJECT ENGR
TOLERANCES
DECIMALS ± .005
FRACTIONS ± 1/16
ANGLES ± 1/2°
DO NOT SCALE THIS PRINT
SUBMITTED BY
CHIEF ENGR
STANDARDS BY
CHIEF ENGINEER
APPROVED BY
CHIEF DIV
THIS PRINT ISSUED
27 1/16
Z-1/342 D
SHEET 4 OF 5

29a

B

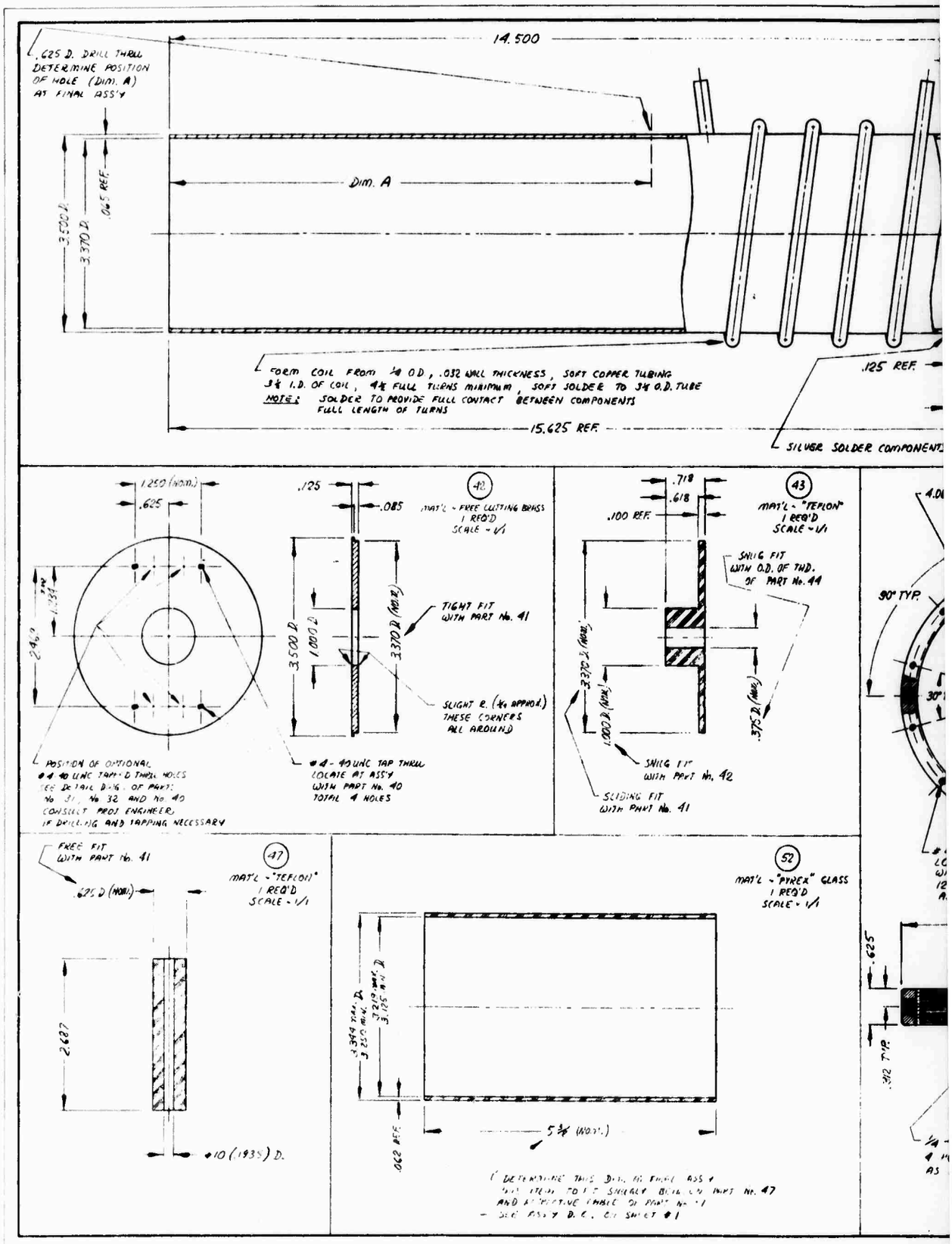
.625 D. DRILL THRU
DETERMINE POSITION
OF HOLE (DIM. A)
AT FINAL ASS'Y
14.500
Dim. A
3.500 D.
3.370 D.
.105 REF.
FORM COIL FROM ¼ O.D., .032 WALL THICKNESS, SOFT COPPER TUBING
3¾ I.D. OF COIL, 4½ FULL TURNS MINIMUM, SOFT SOLDER TO 3¾ O.D. TUBE
NOTE: SOLDER TO PROVIDE FULL CONTACT BETWEEN COMPONENTS
FULL LENGTH OF TURNS
.125 REF.
15.625 REF.
SILVER SOLDER COMPONENTS
1.250 (NOM.)
.625
.125
.085
42
MAT'L - FREE CUTTING BRASS
1 REQ'D
SCALE - 1/1
TIGHT FIT
WITH PART No. 41
SLIGHT R. (¼ APPROX.)
THESE CORNERS
ALL AROUND
POSITION OF OPTIONAL
#4-40 UNC THRU HOLES
(SEE DETAIL DWG. OF PARTS
No 31, No 32 AND No 40
CONSULT PROJ. ENGINEER
IF DRILLING AND TAPPING NECESSARY
#4-40 UNC TAP THRU
LOCATE AT ASS'Y
WITH PART No. 40
TOTAL 4 HOLES
.718
.618
.100 REF.
43
MAT'L - "TEFLON"
1 REQ'D
SCALE - 1/1
SNUG FIT
WITH O.D. OF THD.
OF PART No. 44
SNUG FIT
WITH PART No. 42
SLIDING FIT
WITH PART No. 41
90° TYP.
FREE FIT
WITH PART No. 41
.625 D (NOM.)
47
MAT'L - "TEFLON"
1 REQ'D
SCALE - 1/1
2.687
#10 (.1935) D.
52
MAT'L - "PYREX" GLASS
1 REQ'D
SCALE - 1/1
.062 REF.
5¾ (NOM.)
.625
.312 TYP.

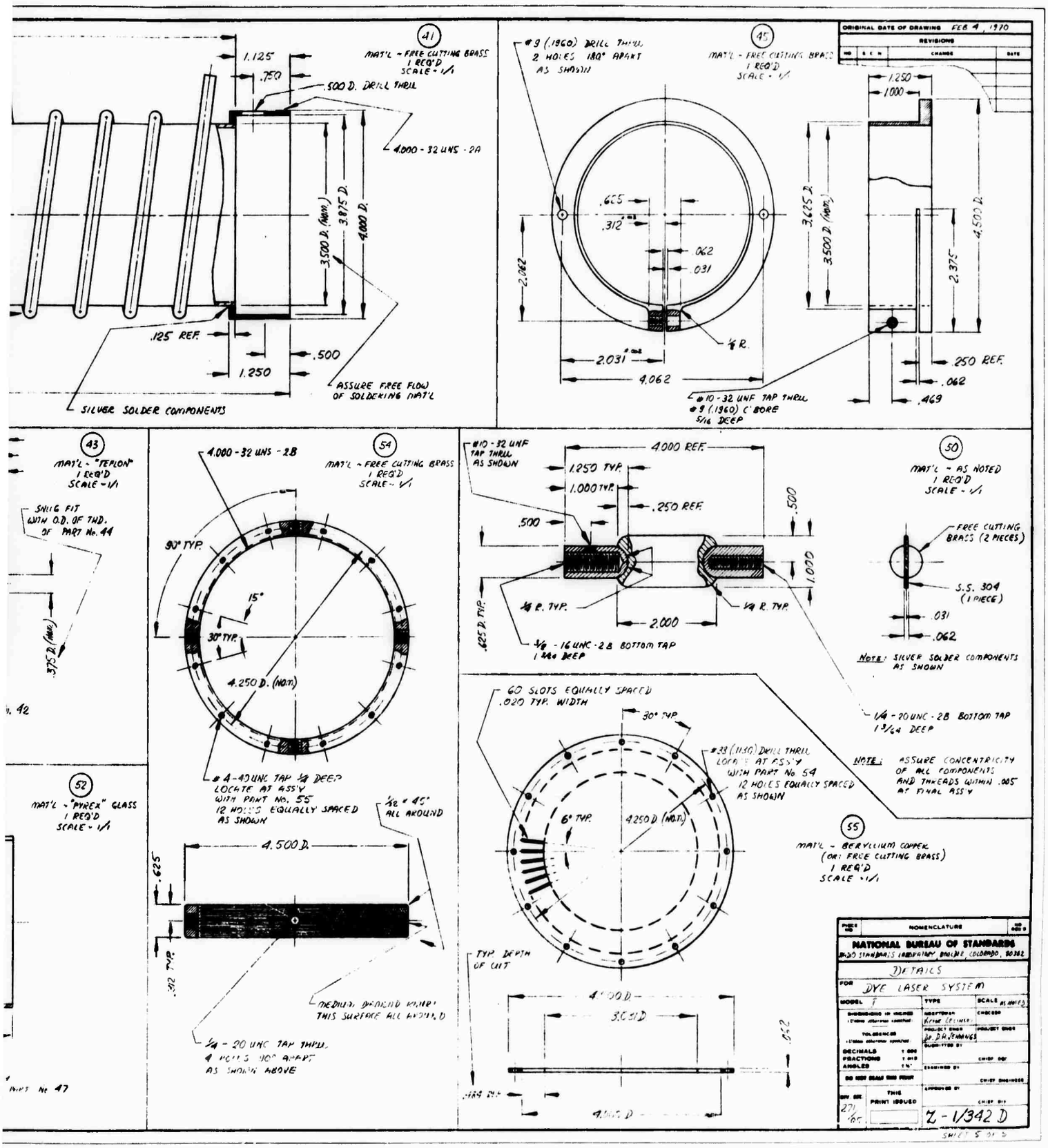
ORIGINAL DATE OF DRAWING FEB 4, 1970
REVISIONS
41
MAT'L - FREE CUTTING BRASS
1 REQ'D
SCALE - 1/1
1.125
.750
.500 D. DRILL THRU
4.000 - 32 UNS - 2A
3.500 D. (NOM.)
3.875 D.
4.000 D.
.125 REF.
.500
1.250
SILVER SOLDER COMPONENTS
ASSURE FREE FLOW OF SOLDERING MAT'L
45
MAT'L - FREE CUTTING BRASS
1 REQ'D
SCALE - 1/1
#9 (.1960) DRILL THRU
2 HOLES 180° APART
AS SHOWN
.625
.312
.062
.031
2.062
2.031
4.062
1/4 R.
1.250
1.000
3.625 D.
3.500 D. (NOM.)
4.500 D.
2.375
.250 REF.
.062
.469
#10 - 32 UNF TAP THRU
#9 (.1960) C'BORE
5/16 DEEP
43
MAT'L - "TEFLON"
1 REQ'D
SCALE - 1/1
SNUG FIT WITH O.D. OF THD. OF PART No. 44
3.75 D. (NOM.)
54
MAT'L - FREE CUTTING BRASS
1 REQ'D
SCALE - 1/1
4.000 - 32 UNS - 2B
90° TYP.
15°
30° TYP.
4.250 D. (NOM.)
#4-40 UNC TAP 1/4 DEEP
LOCATE AT ASS'Y
WITH PART No. 55
12 HOLES EQUALLY SPACED
AS SHOWN
1/32 x 45°
ALL AROUND
4.500 D.
.625
.312 TYP.
MEDIUM DIAMOND KNURL
THIS SURFACE ALL AROUND
1/4 - 20 UNC TAP THRU
4 HOLES 90° APART
AS SHOWN ABOVE
#10 - 32 UNF
TAP THRU
AS SHOWN
4.000 REF.
1.250 TYP.
1.000 TYP.
.250 REF.
.500
.500
1.000
1/4 R. TYP.
1/4 R. TYP.
2.000
.625 D. TYP.
3/8 - 16 UNC - 2B BOTTOM TAP
1 3/4 DEEP
50
MAT'L - AS NOTED
1 REQ'D
SCALE - 1/1
FREE CUTTING BRASS (2 PIECES)
S.S. 304 (1 PIECE)
.031
.062
Note: SILVER SOLDER COMPONENTS AS SHOWN
1/4 - 20 UNC - 2B BOTTOM TAP
1 3/4 DEEP
NOTE: ASSURE CONCENTRICITY OF ALL COMPONENTS AND THREADS WITHIN .005 AT FINAL ASS'Y
52
MAT'L - "PYREX" GLASS
1 REQ'D
SCALE - 1/1
60 SLOTS EQUALLY SPACED
.020 TYP. WIDTH
30° TYP.
#33 (.1130) DRILL THRU
LOCATE AT ASS'Y
WITH PART No. 54
12 HOLES EQUALLY SPACED
AS SHOWN
6° TYP.
4.250 D. (NOM.)
55
MAT'L - BERYLLIUM COPPER
(OR: FREE CUTTING BRASS)
1 REQ'D
SCALE - 1/1
TYP. DEPTH OF CUT
4.00 D.
3.0 S.I.D.
.062
4.500 D.
PIECE NO. | NOMENCLATURE | NO. REQ'D
NATIONAL BUREAU OF STANDARDS
BOULDER LABORATORIES, BOULDER, COLORADO, 80302
DETAILS
FOR DYE LASER SYSTEM
MODEL 1 | TYPE | SCALE AS NOTED
DECIMALS ± .005
FRACTIONS ± 1/16
ANGLES ± 1/2°
DRAWN BY: Kevin Fellner
PROJECT ENGR: Dr. D.H. Jennings
SUBMITTED BY:
CHIEF ENGR.
ENGINEER BY:
CHIEF ENGINEER
APPROVED BY:
CHIEF DIV.
DO NOT SCALE THIS PRINT
REV. SYM. | THIS PRINT ISSUED
2/7/65
Z - 1/342 D
SHEET 5 OF 5

31A

B

NBS TECHNICAL PUBLICATIONS

PERIODICALS

JOURNAL OF RESEARCH reports National Bureau of Standards research and development in physics, mathematics, chemistry, and engineering. Comprehensive scientific papers give complete details of the work, including laboratory data, experimental procedures, and theoretical and mathematical analyses. Illustrated with photographs, drawings, and charts.

Published in three sections, available separately:

• Physics and Chemistry

Papers of interest primarily to scientists working in these fields. This section covers a broad range of physical and chemical research, with major emphasis on standards of physical measurement, fundamental constants, and properties of matter. Issued six times a year. Annual subscription: Domestic, $9.50; foreign, $11.75*.

• Mathematical Sciences

Studies and compilations designed mainly for the mathematician and theoretical physicist. Topics in mathematical statistics, theory of experiment design, numerical analysis, theoretical physics and chemistry, logical design and programming of computers and computer systems. Short numerical tables. Issued quarterly. Annual subscription: Domestic, $5.00; foreign, $6.25*.

• Engineering and Instrumentation

Reporting results of interest chiefly to the engineer and the applied scientist. This section includes many of the new developments in instrumentation resulting from the Bureau's work in physical measurement, data processing, and development of test methods. It will also cover some of the work in acoustics, applied mechanics, building research, and cryogenic engineering. Issued quarterly. Annual subscription: Domestic, $5.00; foreign, $6.25*.

TECHNICAL NEWS BULLETIN

The best single source of information concerning the Bureau's research, developmental, cooperative and publication activities, this monthly publication is designed for the industry-oriented individual whose daily work involves intimate contact with science and technology—*for engineers, chemists, physicists, research managers, product-development managers, and company executives.* Annual subscription: Domestic, $3.00; foreign, $4.00*.

* Difference in price is due to extra cost of foreign mailing.

NONPERIODICALS

Applied Mathematics Series. Mathematical tables, manuals, and studies.

Building Science Series. Research results, test methods, and performance criteria of building materials, components, systems, and structures.

Handbooks. Recommended codes of engineering and industrial practice (including safety codes) developed in cooperation with interested industries, professional organizations, and regulatory bodies.

Special Publications. Proceedings of NBS conferences, bibliographies, annual reports, wall charts, pamphlets, etc.

Monographs. Major contributions to the technical literature on various subjects related to the Bureau's scientific and technical activities.

National Standard Reference Data Series. NSRDS provides quantitative data on the physical and chemical properties of materials, compiled from the world's literature and critically evaluated.

Product Standards. Provide requirements for sizes, types, quality and methods for testing various industrial products. These standards are developed cooperatively with interested Government and industry groups and provide the basis for common understanding of product characteristics for both buyers and sellers. Their use is voluntary.

Technical Notes. This series consists of communications and reports (covering both other agency and NBS-sponsored work) of limited or transitory interest.

Federal Information Processing Standards Publications. This series is the official publication within the Federal Government for information on standards adopted and promulgated under the Public Law 89–306, and Bureau of the Budget Circular A–86 entitled, Standardization of Data Elements and Codes in Data Systems.

Consumer Information Series. Practical information, based on NBS research and experience, covering areas of interest to the consumer. Easily understandable language and illustrations provide useful background knowledge for shopping in today's technological marketplace.

NBS Special Publication 305, Supplement 1, Publications of the NBS, 1968-1969. When ordering, include Catalog No. C13.10:305. Price $4.50; foreign, $5.75.

Order NBS publications from: Superintendent of Documents
Government Printing Office
Washington, D.C. 20402