AD 728496

Reproduced From
Best Available Copy

TECHNICAL REPORT M-71-5

PERFORMANCE OF SOILS UNDER TRACK LOADS

Report 1

MODEL TRACK AND TEST PROGRAM

by

G. W. Turnage

D D C
RECEIVED
AUG 23 1971

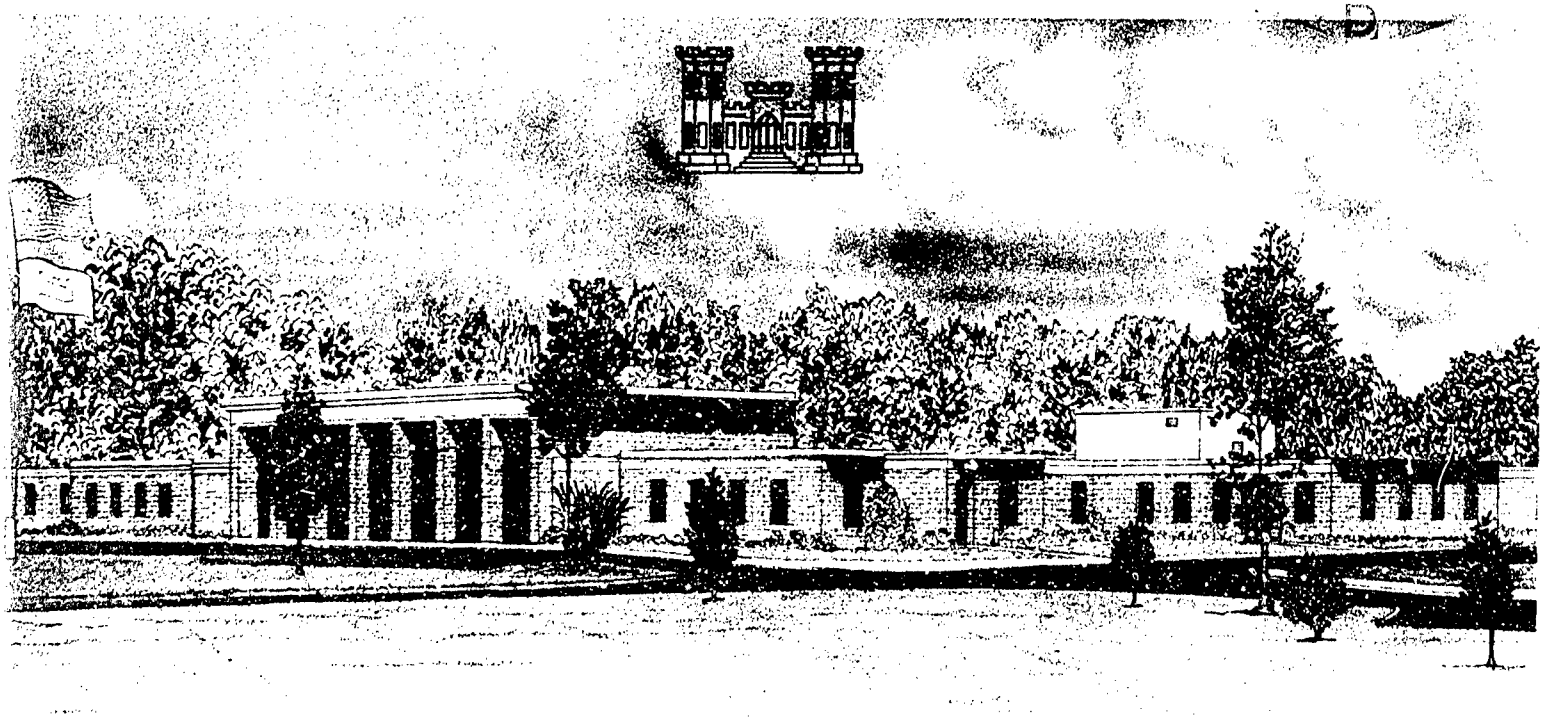

July 1971

Sponsored by U. S. Army Materiel Command

Conducted by U. S. Army Engineer Waterways Experiment Station, Vicksburg, Mississippi

Reproduced by
NATIONAL TECHNICAL
INFORMATION SERVICE
Springfield, Va 22151

APPROVED FOR PUBLIC RELEASE; DISTRIBUTION UNLIMITED

89

ACCESSION for
NTIS WHITE SECTION
DDC BUFF SECTION
UNANNOUNCED
JUSTIFICATION
DISTRIBUTION/AVAILABILITY CODES
Dist. AVAIL. and/or SPECIAL
A

Destroy this report when no longer needed. Do not return it to the originator.

The findings in this report are not to be construed as an official Department of the Army position unless so designated by other authorized documents.

Unclassified
Security Classification

DOCUMENT CONTROL DATA - R & D

(Security classification of title, body of abstract and indexing annotation must be entered when the overall report is classified)

1. ORIGINATING ACTIVITY *(Corporate author)*

U. S. Army Engineer Waterways Experiment Station
Vicksburg, Miss.

2a. REPORT SECURITY CLASSIFICATION

Unclassified

2b. GROUP

3. REPORT TITLE

PERFORMANCE OF SOILS UNDER TRACK LOADS: Report 1, MODEL TRACK AND TEST PROGRAM

4. DESCRIPTIVE NOTES *(Type of report and inclusive dates)*

Report 1 of a series

5. AUTHOR(S) *(First name, middle initial, last name)*

Gerald W. Turnage

6. REPORT DATE

July 1967

7a. TOTAL NO. OF PAGES

86

7b. NO. OF REFS

27

8a. CONTRACT OR GRANT NO.

b. PROJECT NO. 1T062103A06

c. Task 03

d.

9a. ORIGINATOR'S REPORT NUMBER(S)

Technical Report M-71-5, Report 1

9b. OTHER REPORT NO(S) *(Any other numbers that may be assigned this report)*

10. DISTRIBUTION STATEMENT

Approved for public release; distribution unlimited.

11. SUPPLEMENTARY NOTES

12. SPONSORING MILITARY ACTIVITY

U. S. Army Materiel Command
Washington, D. C.

13. ABSTRACT

This introductory report reviews approaches taken by major investigators of the soil-track system and describes in detail the facilities, techniques, and long-range program that the U. S. Army Engineer Waterways Experiment Station will use to develop a comprehensive, quantitative description of the behavior of soils under track loads. The report also includes a comprehensive list of definitions of mobility terms applicable to the soil-track system. The laboratory model track to be used in the program is a fairly large-scale single-track system designed for use in a dynamometer carriage-soil bin arrangement. The system is extremely versatile and can be adjusted as necessary to evaluate the many variables that influence straight-line track performance in soil. Initially, the model track will be used to determine the primary independent parameters for tracks operating in air-dry sand. The values of the primary parameters will be varied in later tests to develop a basic-parameter track performance prediction term. Finally, the influence of the parameters not included in the basic-parameter prediction term will be determined, and the prediction term modified to include functions of any additional parameters that influence track performance in sand significantly. A similar program of tests will be used to develop a means for predicting track performance in fine-grained soils. Tests to determine track performance in layered soil systems are also planned. In the final stages of the program, the data developed in the tests will be used to evaluate existing track performance theories and, if necessary, to develop a new theory. Field tests will then be conducted to determine to what extent laboratory-developed track performance prediction terms must be modified to predict in-the-field performance. Appendix A describes the Plackett-Burman test design, which will be used to identify the most important variables of the system with a minimum of testing. Appendix B presents the Waterways Experiment Station mobility index formulas for tracked vehicles.

DD FORM 1 NOV 65 1473 REPLACES DD FORM 1473, 1 JAN 64, WHICH IS OBSOLETE FOR ARMY USE.

Unclassified
Security Classification

14. KEY WORDS	LINK A ROLE	LINK A WT	LINK B ROLE	LINK B WT	LINK C ROLE	LINK C WT
Mobility						
Soil-track interaction						
Soil-vehicle interaction						
Track models						
Tracked vehicles						

TECHNICAL REPORT M-71-5

PERFORMANCE OF SOILS UNDER TRACK LOADS

Report 1

MODEL TRACK AND TEST PROGRAM

by

G. W. Turnage

July 1971

Sponsored by U. S. Army Materiel Command
Project 1T062103A046, Task 03

Conducted by U. S. Army Engineer Waterways Experiment Station, Vicksburg, Mississippi

ARMY-MRC VICKSBURG, MISS

APPROVED FOR PUBLIC RELEASE; DISTRIBUTION UNLIMITED

THE CONTENTS OF THIS REPORT ARE NOT TO BE USED FOR ADVERTISING, PUBLICATION, OR PROMOTIONAL PURPOSES. CITATION OF TRADE NAMES DOES NOT CONSTITUTE AN OFFICIAL ENDORSEMENT OR APPROVAL OF THE USE OF SUCH COMMERCIAL PRODUCTS.

FOREWORD

The test facilities and techniques described herein are being used to conduct studies at the U. S. Army Engineer Waterways Experiment Station (WES) as a part of the vehicle mobility research program under DA Project 1T062103A046, "Trafficability and Mobility Research," Task 03, "Mobility Fundamentals and Model Studies," under the sponsorship and guidance of the Research, Development and Engineering Directorate, U. S. Army Materiel Command.

Testing to determine the performance of soils under track loads is being conducted by personnel of the Mobility Research Branch (MRB), Mobility and Environmental (M&E) Division, WES, under the general supervision of Mr. W. G. Shockley, Chief, M&E Division, and under the direct supervision of Mr. S. J. Knight, Assistant Chief, M&E Division, and Chief, MRB. The study began in 1968 under the leadership of Dr. D. R. Freitag, former Chief, MRB, and now Chief, Office of Technical Programs and Plans, WES. Dr. K. W. Wiendieck, formerly an engineer in the MRB, contributed many significant suggestions and recommendations. All personnel of the Operations Group of the MRB are actively engaged in the study. This report was prepared by Mr. G. W. Turnage of the Research Projects Group, MRB.

COL Levi A. Brown, CE, and COL Ernest D. Peixotto, CE, were Directors of the WES during this study and the preparation of this report. Mr. F. R. Brown was Technical Director.

CONTENTS

	Page
FOREWORD	v
CONVERSION FACTORS, METRIC TO BRITISH AND BRITISH TO METRIC UNITS OF MEASUREMENT	ix
NOTATION	xi
SUMMARY	xiii
PART I: INTRODUCTION	1
Background	1
Purpose and Scope	2
Definitions	3
PART II: PREVIOUS INVESTIGATIONS	12
U. S. Army Tank-Automotive Command (TACOM) Approach	12
The Perloff Approach	19
WES Trafficability Method	22
Other Investigations	26
PART III: THE WES MODEL TRACK AND TEST ARRANGEMENTS	29
Laboratory Model Track	29
Test Facilities and Equipment	35
PART IV: LABORATORY EVALUATION OF TRACK PERFORMANCE	43
Some Considerations Pertinent to Testing Single Tracks	43
Test Techniques	54
PART V: LONG-RANGE TEST PROGRAM	62
Basis for Program	62
Outline of Program	63
LITERATURE CITED	67
APPENDIX A: IDENTIFICATION OF PRIMARY SYSTEM VARIABLES FROM A PLACKETT-BURMAN TEST DESIGN	A1
APPENDIX B: WES MOBILITY INDEX FORMULAS FOR TRACKED VEHICLES	B1

CONVERSION FACTORS, METRIC TO BRITISH AND BRITISH TO METRIC UNITS OF MEASUREMENT

Metric units of measurement used in this report can be converted to British units as follows:

Multiply	By	To Obtain
meters	3.281	feet
centimeters	0.3937	inches
kilonewtons	224.8	pounds
newtons	0.2248	pounds
kilonewtons per square meter	0.1450	pounds per square inch
square centimeters	0.155	square inches
centimeters per second	0.3937	inches per second
meters per second	3.281	feet per second
meganewtons per cubic meter	3.684	pounds per cubic inch
cubic decimeters	0.2642	gallons
meter-kilonewtons	737.6	foot-pounds

British units of measurement used in this report can be converted to metric units as follows:

Multiply	By	To Obtain
pounds per square inch	6.895	kilonewtons per square meter

SUMMARY

This introductory report reviews approaches taken by major investigators of the soil-track system and describes in detail the facilities, techniques, and long-range program that the U. S. Army Engineer Waterways Experiment Station will use to develop a comprehensive, quantitative description of the behavior of soils under track loads. The report also includes a comprehensive list of definitions of mobility terms applicable to the soil-track system.

The laboratory model track to be used in the program is a fairly large-scale single-track system designed for use in a dynamometer carriage-soil bin arrangement. The system is extremely versatile and can be adjusted as necessary to evaluate the many variables that influence straight-line track performance in soil.

Initially, the model track will be used to determine the primary independent parameters for tracks operating in air-dry sand. The values of the primary parameters will be varied in later tests to develop a basic-parameter track performance prediction term. Finally, the influence of the parameters not included in the basic-parameter prediction term will be determined, and the prediction term modified to include functions of any additional parameters that influence track performance in sand significantly. A similar program of tests will be used to develop a means for predicting track performance in fine-grained soils. Tests to determine track performance in layered soil systems are also planned.

In the final stages of the program, the data developed in the tests will be used to evaluate existing track performance theories and, if necessary, to develop a new theory. Field tests will then be conducted to determine to what extent laboratory-developed track performance prediction terms must be modified to predict in-the-field performance.

Appendix A describes the Plackett-Burman test design, which will be used to identify the most important variables of the system with a minimum of testing. Appendix B presents the Waterways Experiment Station mobility index formulas for tracked vehicles.

NOTATION

The following notations are used in the U. S. Army Engineer Waterways Experiment Station soil-track research. Other symbols that are used specifically and only once in this report and are defined in context are not listed here.

A	Ground contact area of the track (usually refers to the product of contact width b times nominal contact length ℓ)
b	Track-ground contact width
c	Soil cohesion
C	Cone index of the soil
CG	Track center of gravity
DCG	Track dynamic center of gravity
G	Soil penetration resistance gradient (a subscript, e.g. G_{0-15}, denotes the depth of soil that G describes)
H	Horizontal soil reaction resultant (figs. 18 and 19)
ℓ	Nominal track-ground contact length (i.e. contact length on a flat, unyielding surface)
M	Torque input at the drive sprocket
N	Normal soil reaction resultant (figs. 16 and 17)
p	Soil pressure
P	Track pull
P_t	Track towed force
RCG	Track at-rest center of gravity
R_s	Resultant of N + T (figs. 16-19)
R_t	Resultant of W + G (figs. 16-19)
s	Shear strength of soil
S	Track slip
T	Tangential soil reaction resultant (figs. 16 and 17)
V	Vertical soil reaction resultant (figs. 18 and 19)
W	Vertical load on the track
W'	Weight of track system
z	Sinkage of the track
α	Angle of approach of the track

β Angle of departure of the track

ς Track attitude angle

θ Track trim angle

σ Soil stress

ϕ Angle of internal friction of the soil

PERFORMANCE OF SOILS UNDER TRACK LOADS

MODEL TRACK AND TEST PROGRAM

PART I: INTRODUCTION

Background

1. Useful as it is, the wheel is not the best type of vehicle running gear for many off-road environments. As early as 1770, when Edgeworth obtained the first patent for a tracked vehicle, the possibility was recognized that better off-road vehicle performance might be achieved through a more efficient transfer of vehicle weight to the soil than a wheel could provide. By 1900, technology was available for developing a useful tracked vehicle; however, interest primarily in on-road travel caused very little effort to be directed toward improvement of off-road vehicle running gears. World War I changed that situation. Bloody trench warfare, forced upon the Allies largely because off-road vehicle mobility was lacking, made development of ground-crawling armored vehicles a necessity. The British responded by producing in 1915 the first tank as we know it today.

2. Military history of the past 50 years documents the ability of tracked vehicles to operate successfully in innumerable off-road situations where wheeled vehicles could not go. Over the years, American industry and ingenuity have produced countless modifications and innovations to adapt tracked vehicles to particular military and peacetime uses (road building, mining, mineral exploration, forestry, etc.). Two significant, nagging facts remain, however. First, the soft-ground mobility of various classes of tracked military vehicles has remained largely unchanged for a number of years.[1] Nominal unit ground pressures (i.e. vehicle weight per unit track-contact area) have stayed in the same range for about 50 years, and the basic form of the tank has been frozen for 25 years. Second, no test-proven, comprehensive system for quantitatively describing in-soil track performance exists today. Thus, only general guidelines are available to indicate the changes in tracked vehicle design that will produce the most

dramatic improvements in off-road performance.

3. Knowledge of in-soil track performance that has been incorporated in the design of tracked vehicles has been obtained, in large part, from in-the-field, proving-ground-type tests. Furthermore, in most instances, the design of the vehicle has incorporated reliable, experience-proven engineering principles only insofar as the performance of the vehicle as an independent unit is concerned. For example, the expertise is available whereby a reliable engine can be designed and built to develop practically any given horsepower rating; however, only vague general knowledge exists with regard to the horsepower required, for example, to move a ton of supplies 10 miles over a low-strength soil. A large number of agencies, both military and commercial, use proving-ground tests to determine performance capabilities of the overall vehicle and to locate weak links among its components, but tests of this type are useful only in the final phase in the development of the vehicle and, by their nature, they cannot be expected to produce a system for predicting track performance. Even when prepared test sites are used, circumstances often drastically limit the control of soil conditions. And since the vehicles received for testing already have their dimensions, weight, weight distribution, etc., fixed, there is little opportunity, even over a long period of time, to develop a systematic scheme for evaluating the effects on performance of each of the many soil-track parameters.

4. Therefore, rational procedure requires that before the design or the proving-ground stage, there must be a period in which data from systematic, carefully controlled tests are analyzed to develop a comprehensive, quantitative description of the soil-track system. The U. S. Army Engineer Waterways Experiment Station (WES) has initiated a test program for this purpose. This report is the first in a series that will cover the test program being conducted.

Purpose and Scope

5. The primary purposes of this report are to: (a) review the approaches that principal investigators have taken in examining the

soil-track system, (b) describe the test equipment and techniques being used to study the performance of soils under tracks, and (c) outline the long-range test program that will be followed. All parameters thought to significantly influence the behavior of tracks in soil are defined, and a technique is described (Appendix A) for identifying important system parameters with a minimum of testing.

Definitions

6. Terms in the model soil-track system used at WES and in this report are defined below.* Soil parameters in addition to those listed in c below will be used as needed. In particular, efforts are being made to develop measuring devices, test techniques, and evaluation procedures to describe quantitatively the conditions at a slippery soil surface and within soil sections of nonuniform strength profiles.

a. Single-track components (fig. 1)

Road bogie or road wheel: One of the wheels located inside the perimeter of the tread along the base or bottom of the track. The road bogies, taken together, support all of the vehicle weight.

Idler bogie or idler wheel: One of the wheels located inside the perimeter of the tread, but not along the base of the track. These bogies maintain the position of the track belt and help keep the treads in line.

Angle-positioning bogie or wheel: On the WES model track, an idler wheel located between the end road wheel and the sprocket at that end. The positions of the two angle-positioning wheels (one on either end of the track) can be adjusted to provide a variety of approach and departure angles.

Track drive sprocket: A motor-driven wheel, located either fore or aft, with circumferential teeth that intermesh with openings between adjacent track shoes to propel the track.

Track idler sprocket: A wheel, located at the end of the track opposite the drive sprocket, that may either have or not have circumferential teeth and whose functions are to maintain the position of the track belt and the alignment of the track tread.

---

* Definitions agree with those in reference 2 for corresponding terms.

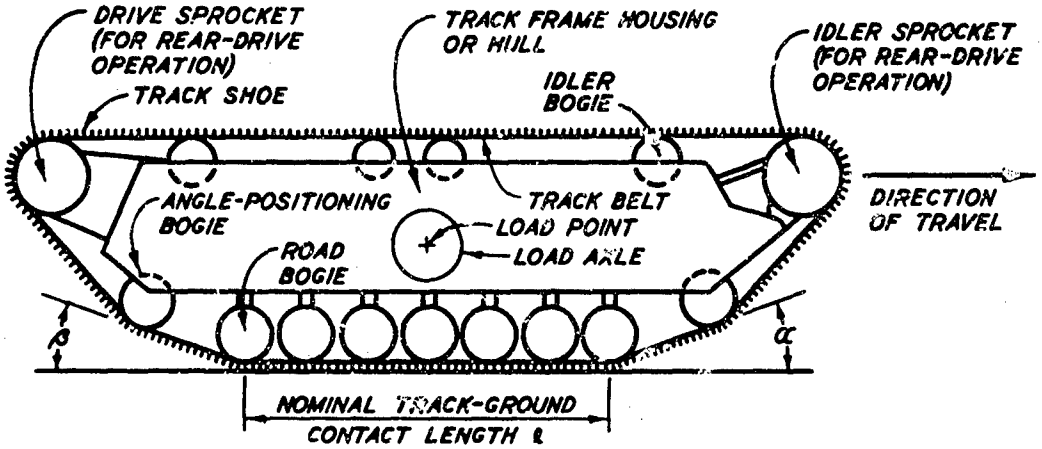

a. OVERALL SIDE VIEW

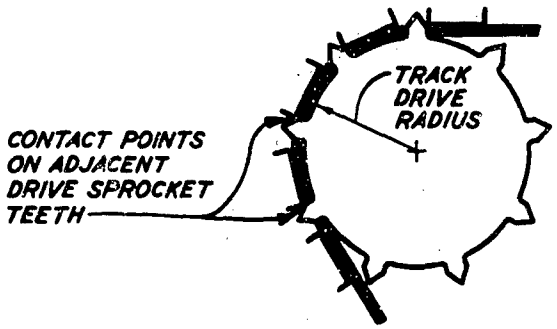

b. INFLATED SIDE VIEW OF TRACK DRIVE SPROCKET

Fig. 1. Schematic side view of WES model track

Track pitch: The distance between adjacent drive sprocket contact points (i.e. the distance between corresponding points on adjacent drive sprocket teeth).

Track drive radius: The smallest distance from the center of the drive sprocket to the outside edge of the drive sprocket; i.e. the linear distance between the center of the sprocket and the point between adjacent sprocket teeth nearest to the center of the sprocket (see fig. 1).

Track-ground contact length: The length of that portion of the track in contact with the ground surface measured along the perimeter of the track.

Track-ground contact length, nominal (ℓ): The length of the track in contact with a flat, unyielding surface.

Track-ground contact width (b): The maximum width of the contact elements of the track.

Track size: Generally described as the product "b by ℓ," e.g. a 15.2- by 121.9-cm* track.

Track-ground contact area: The sum of the areas of the elements in contact with the surface. Includes interruptions due to openings within or between grousers and openings between track shoes.

Track-ground contact area, nominal (A): The product of the nominal track-ground contact length and the track-ground contact width.

Track-ground contact pressure: The vertical force (weight) acting on the track divided by the track-ground contact area.

Track-ground contact pressure, nominal: The vertical force (weight) acting on the track divided by the nominal track-ground contact area.

Track frame housing or hull: The metal plates on either side of the track that conceal and protect its inner working parts.

WES model track angle of approach (α):** The angle formed by

---

* A table of factors for converting metric to British and British to metric units of measurement is given on page ix.

** For nearly all conventional tracked vehicles, no bogies are present between the foremost road bogie and the forward sprocket or between the rearmost road bogie and the rear sprocket. Thus, angles of approach and departure for conventional tracked vehicles usually are defined by the angles formed by the intersection of the track-ground contact plane with (a) the plane tangent to the foremost road bogie and the forward sprocket (α angle) and (b) the plane tangent to the rearmost road bogie and rear sprocket (β angle). If the track hull extends beyond the periphery of the track, the inclined plane that defines the upper extremity of either angle extends from the end road bogie to the farthest point of the track hull.

the intersection of the track-ground contact plane and the plane tangent to the outside perimeter of the foremost road bogie and the forward angle-positioning bogie.

WES model track angle of departure (β): The angle formed by the intersection of the track-ground contact plane and the plane tangent to the outside perimeter of the rearmost road bogie and the rearward angle-positioning bogie.

WES model track load point: The location of the axle at which the model track is loaded.

WES model track bogie pressure:* Pressure supplied by pneumatic cylinders (one for each road bogie) to support the weight of the track plus imposed load.

WES model track bogie pressure distribution: Any one of an infinite variety of patterns of bogie pressures that can be obtained by setting individual road bogie pressures at predetermined levels. Distributions include uniform, linearly increasing front-to-rear, linearly decreasing front-to-rear, sinusoidal, etc.

Bogie spacing: Distance between centers of adjacent road bogies.

Track shoe (fig. 2): One of the rigid metal track elements that are connected by means of hinged or flexible devices to form the track.

Track-shoe face: The outermost surface of the track shoe exclusive of grouser.

Grouser (or tracked cleat): A projection on a traction element intended to improve propulsion.

Grouser face: The outermost surface of the grouser.

Grouser height: The distance measured from the track shoe face to the grouser face.

Grouser spacing or pitch: The distance between corresponding points on adjacent grousers.

Grouser width: The overall width of a grouser.

Track pad or plate: A replaceable traction surface element of a track shoe.

WES model track shoe (fig. 2): A metal, channel-shaped plate

---

* Most conventional tracked vehicles gain support of their weight plus load by other than pneumatic means (torsion bars plus wheel arms, hydraulic systems, etc.). The WES model track uses a pneumatic system to allow close control (and measurement) of the pressure of each road bogie and to provide an extremely versatile means of supporting total track weight plus load.

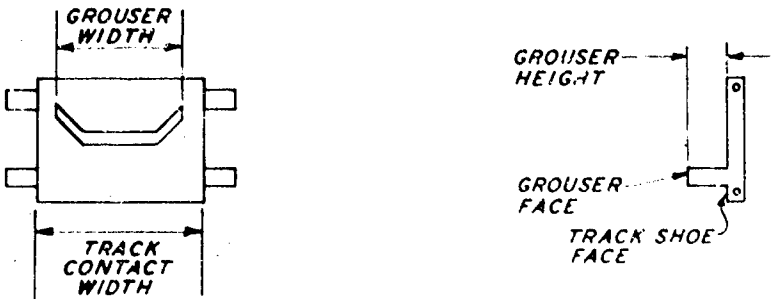

a. CONVENTIONAL TRACK SHOE AND GROUSER

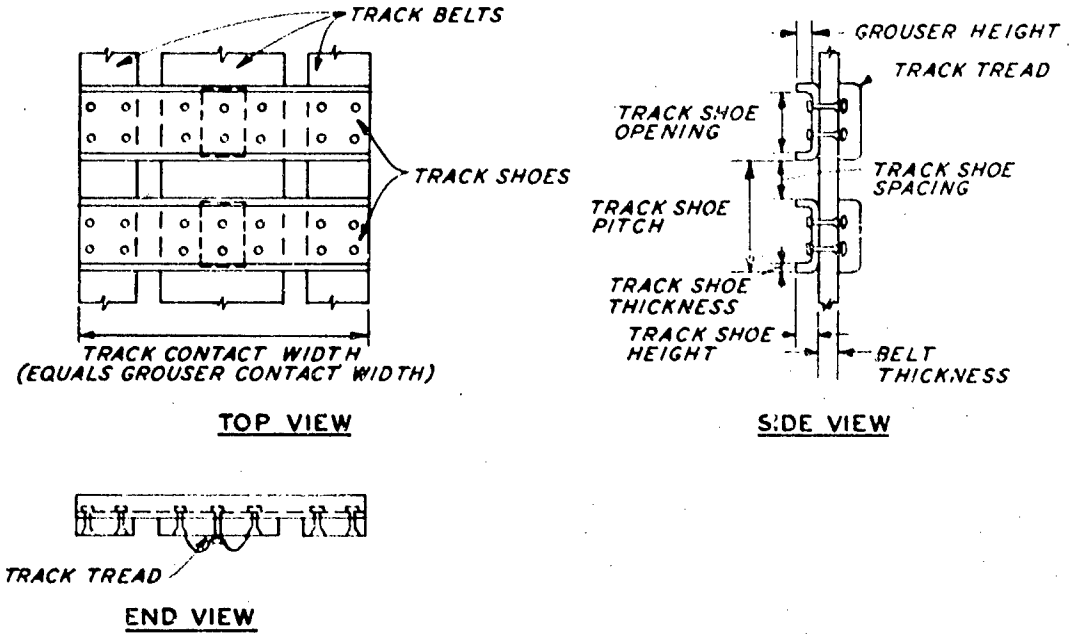

b. SECTION OF WES MODEL BAND-TYPE TRACK

Fig. 2. Track shoes and grousers

whose projections serve as grousers.

WES model track-shoe width: The overall width of the track shoe.

WES model track-shoe thickness: The distance between the inner and outer faces of the extended portions (grousers) of the track shoe.

WES model track-shoe opening: The distance between the inner faces of the extended portions (grousers) of a track shoe.

WES model track-shoe pitch: The distance between corresponding points on adjacent track shoes.

WES model track-shoe spacing: The open distance between adjacent track shoes, i.e. the shortest distance between outside faces of adjacent track shoes.

WES model track belt or band: Tough, rubber-and-fabric belts to which the track shoes are bolted. One belt is used for track shoes 15.2 cm wide, and three for shoes either 30.5 or 61.0 cm wide.

b. Track types

Band track: A track consisting of one or more bands either continuous or made up of shorter lengths joined together and having a larger number of points of flexure than is required by the normal pitch of the sprocket.

Girderized track: A track with links restrained from bowing due to vertical soil reaction.

Live track: A track consisting of a connected series of links, with an elastic medium in the joints, joined so that some of the energy put into the joints during flexing is regained.

Spaced-link track: A track consisting of elements designed so that the grouser height-to-spacing ratio is intended to achieve general soil failure between the grousers.

c. Soil strength parameters

Cone index (C): An index of soil penetration resistance, consistency, or strength. It is the force per unit area (kN/m^2) required to move a 30-deg right circular cone of 3.23-cm^2 base area through the soil normal to the soil surface at a rate of 3.05 cm/sec. For most fine-grained soils, this measurement is an average value for a specified layer of soil several centimeters thick.

Penetration resistance gradient (G): An index of soil strength (MN/m^3) for essentially cohesionless soils. It is the slope of the curve of cone penetration resistance versus depth averaged over the depth range (e.g. 0 to 15 cm) for

which changes in soil strength noticeably affect the performance of a track.

Cohesion (c):* The shear strength of a soil at zero normal pressure. It is represented as a parameter in the Coulomb equation $s = c + p \tan \phi$, relating the shear strength of a soil s to the normal pressure p.

Friction angle (ϕ):* A measure of the amount of increase in soil shear strength s with an increase in pressure p, represented in the Coulomb equation $s = c + p \tan \phi$.

d. In-soil track performance

Travel ratio: Ratio of the actual to theoretical rate of track horizontal advance. For a track powered by one drive sprocket, the theoretical rate of horizontal advance is defined as $r\omega \cos \epsilon$, where r is the track drive radius, ω is the angular velocity of the drive sprocket, and ϵ is the angle between the bottom of the track and a horizontal plane.

Slip (S): Unity minus the travel ratio.

Torque (M): Torque input at the drive sprocket. Torque is related to and varies with slip (fig. 3**).

Pull (P): The component, acting horizontally in the direction of travel, of the resultant of all soil forces acting on the track. It is considered positive when the track is performing useful work, and negative when an additional force must be applied to maintain motion. Like torque, pull is related to and varies with slip (fig. 3). Pull at any particular level of slip is denoted by a subscript specifying the percentage of slip, e.g. P_{20} is pull at 20 percent slip.

Self-propelled point: The point at which the pull is zero and the torque input is just sufficient for the track to propel itself (fig. 3).

Towed force (P_t): The pull required to tow the track with zero torque input at the drive sprocket (fig. 3).

Load (W): The vertical force applied to the track.

---

* A subscript usually denotes which of the several available devices was used to obtain measurements of c and ϕ. For example, subscripts t, d, b, and a refer to the triaxial shear, direct shear, bevameter shear, and in situ ring shear devices, respectively. (See references 3 and 4 for detailed descriptions of the use of these and other measuring devices.)

** Curves in fig. 3 are based largely on examination of field-test data. Modifications may be made, depending on results obtained in laboratory tests where more precise measurements (particularly of slip) can be made.

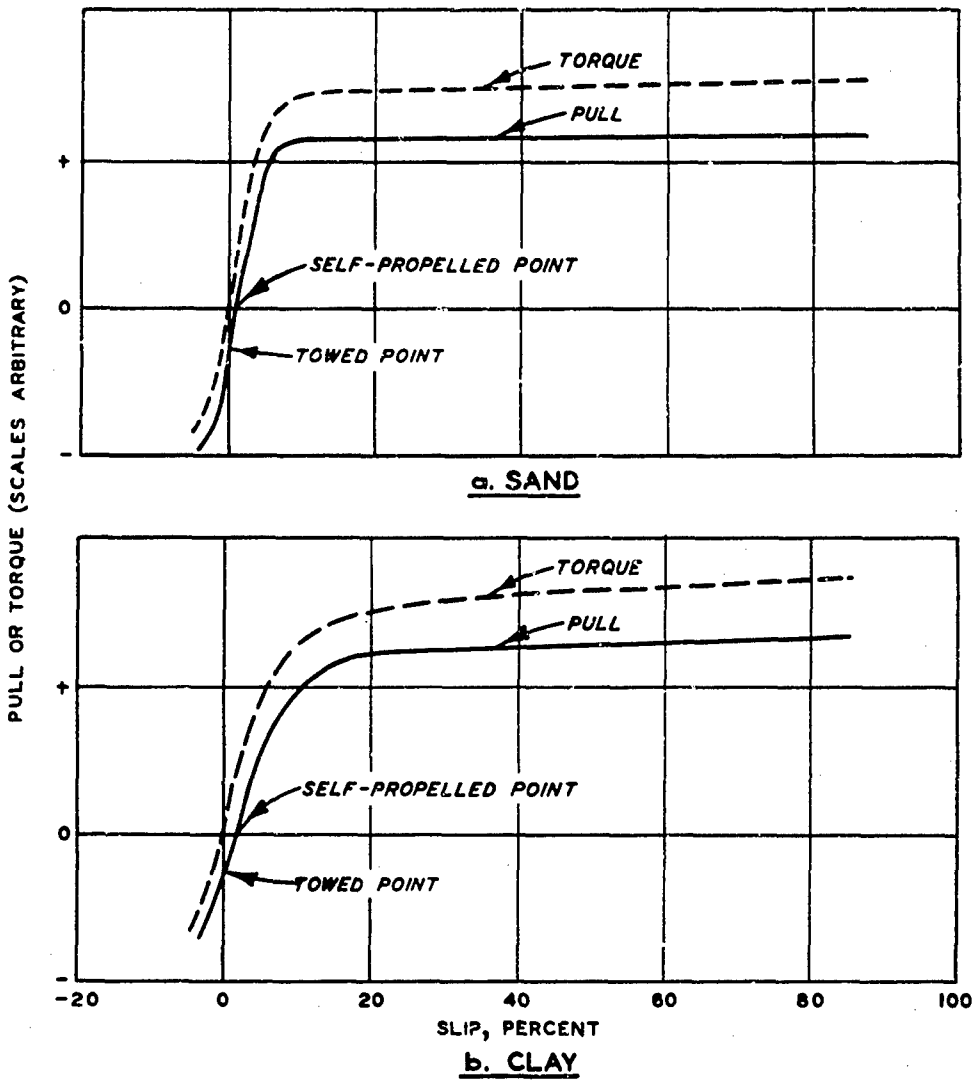

Fig. 3. Sample pull-slip and torque-slip curves for air-dry sand and saturated clay

Trim angle (θ): The angle between the bottom of the track and the original soil surface.

Attitude angle (ϵ): The angle between the bottom of the track and a horizontal plane.

Sinkage (z): The depth to which the track penetrates the soil, measured relative to the original soil surface. The sinkage at any particular point is denoted by a subscript specifying the location, e.g. z_c is sinkage at the geometric center of the track.

Track belt tension: The tensile force within the track belt that results from forces imparted to it in an outward direction by the track bogies and sprockets and in an inward direction by the supporting medium.

Internal rolling resistance: Horizontal force required to tow the track under load and with the drive chains disengaged on a flat, level, unyielding surface.

Inherent track-system resistance: The force required to turn the track under zero load. An indication of this force is obtained by measuring the torque required to rotate the track in air at the same rotational velocity used in the subsequent test.

Dynamic soil pressure redistribution: The change in distribution of soil forces that support the track caused by a change in value of any of several track performance variables (trim angle, drawbar pull, location of center of gravity, track slip, etc.).

Restraining force: In a fixed-trim-angle test, the force applied at a given point to maintain the selected trim angle.

Restraining moment for the WES model track: Determined by multiplying the restraining force by the perpendicular distance between the load axle and the restraining force.

PART II: PREVIOUS INVESTIGATIONS

7. A review of the literature shows that there are almost as many different approaches to investigating the soil-track system as there are researchers. This is not too surprising when one considers the complexity of the interaction of rotating, slipping, geometrically complicated tracks of variable tension and weight distribution with soils having an infinite variety of physical properties.

8. Unfortunately, the results of studies that incorporate markedly different techniques sometimes do not lend themselves to useful interpretation by other techniques. Still, it is useful to review the work of some of the principal researchers to determine the main features of their approaches, some strengths and weaknesses of their methods, and general results of value to all investigators.

U. S. Army Tank-Automotive Command (TACOM) Approach

Basic relations used

9. Many of the concepts, test techniques, and methods of analysis presently used by TACOM are based on the single basic track performance prediction equation[5-7]

$$P = H - (R_c + R_b) \tag{1}$$

where

P = track pull

H = horizontal force, soil thrust, or gross tractive effort of a single track

R_c = resistance to track motion due to soil compaction

R_b = resistance to track motion due to soil bulldozing

Several expressions to describe each term of equation 1 have been developed for a wide variety of particular soil-track situations. Some are simple, while others are so complex that their solution requires an electronic computer; but the basis for each can be traced to equation 1.

10. For a situation where the track experiences negligible sinkage and inclination from the horizontal on level soil (the stability problem, fig. 4), maximum thrust is computed by

$$H = Ac + W \tan \phi \tag{2}$$

where

A = ground contact area of the track

c = cohesion of the soil (from Coulomb)

W = vertical load on the track due to vehicle weight

ϕ = angle of internal friction of the soil (from Coulomb)

To account for the additional shearing force produced by the grousers of a track, a term H' is added to the right side of equation 2; thus

$$H = Ac + W \tan \phi + H' \tag{3}$$

For frictional soils H' is very small, while for cohesive soils, grouser action increases total H on the order of 10 to 15 percent.

11. The stability problem is further described as the "...load-carrying capacity of soils...at the moment of the incipient soil failure of the soil through plastic flow,"[5] and the following formula for bearing capacity of a small footing (from Terzaghi[8]) is applied to the soil-track system:

$$W_s = A(cN_c + \gamma z N_q + \frac{1}{2} \gamma b N_\gamma) \tag{4}$$

where

W_s = the safe load (i.e. the maximum load that area A can withstand and remain on the ground surface)

N_c, N_q, N_γ = constants whose values depend on soil friction angle ϕ (fig. 5)

γ = the unit weight of the soil

z = the initial plate sinkage at which the bearing capacity is evaluated

b = the width (smaller dimension) of the plate

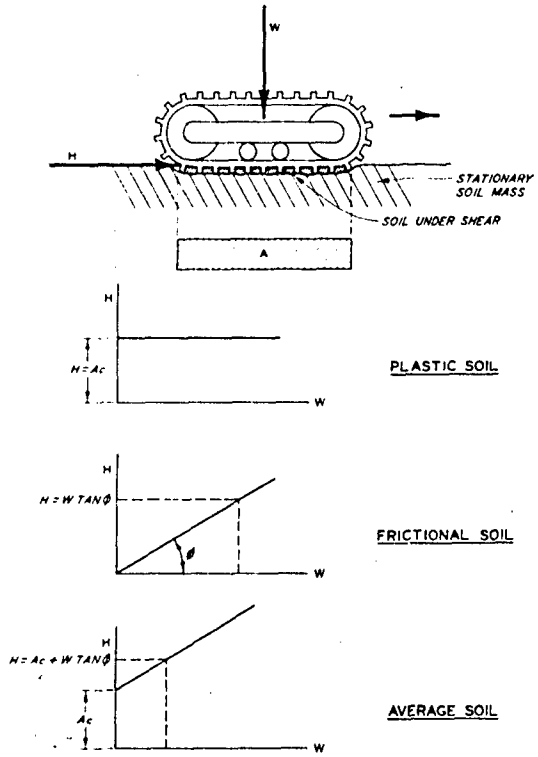

Fig. 4. Relation of track thrust to soil shear[6]

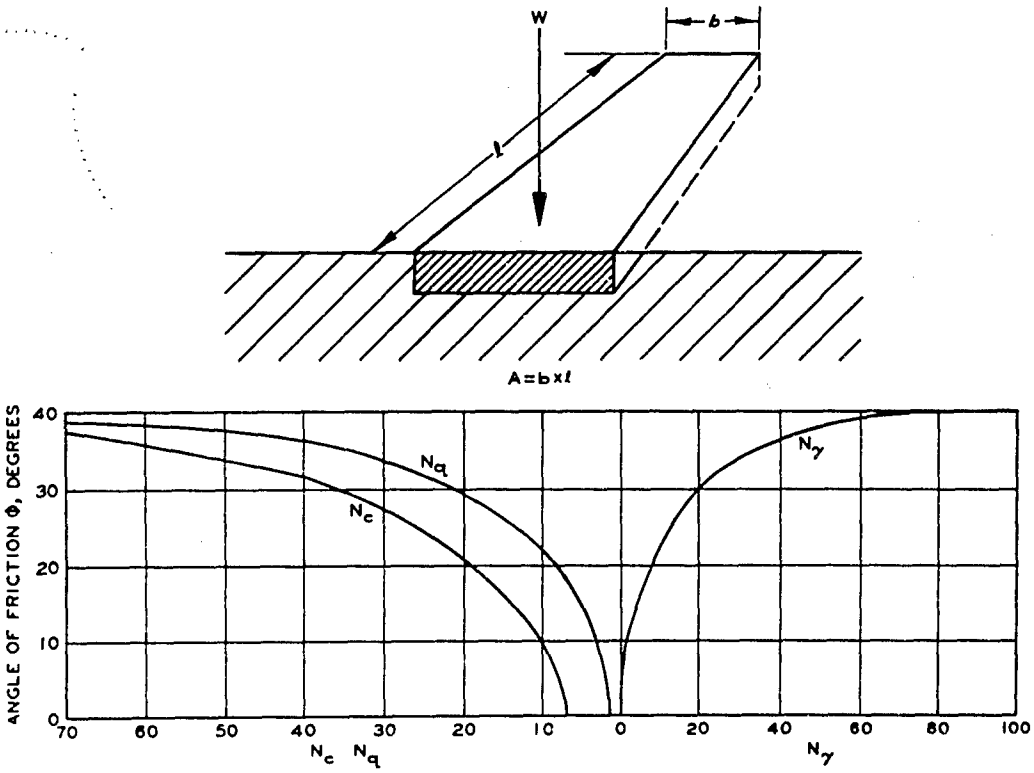

Fig. 5. Soil bearing capacity[8]

For a tank operating at negligible sinkage ($z \approx 0$), the term $\gamma z N_q$ of equation 4 is dropped. Note that allowable safe load is increased by increasing track width b, if the soil strength has a frictional component.

12. TACOM considers the "elasticity or plasticity problem" or the "subsurface-crossing problem" to result when sufficient track sinkage occurs to require that motion resistance, slippage, etc., be taken into account. Track sinkage is approximated through use of a rectangular plate forced slowly into the soil by a uniformly distributed load. The following equation is used to describe this relation:

$$p = \left(\frac{k_c}{b} + k_\phi \right) z^n \tag{5}$$

where

p = unit (uniform) pressure on the plate

k_c = modulus of soil deformation due to cohesive ingredients of soil

b = width (smaller dimension) of the plate

k_ϕ = modulus of soil deformation due to frictional ingredients of soil

z = sinkage of the plate under a static load

n = exponent of the soil deformation equation

Uniform sinkage of a track in frictional and cohesive soil masses is then computed by

$$z = \left(\frac{p}{\frac{k_c}{b} + k_\phi} \right)^{1/n} \tag{6}$$

Thus, for a particular track pressure p and a particular soil (i.e. a particular set of values of k_c, k_ϕ, and n), increasing track width b causes track sinkage to increase. This effect becomes more pronounced as soil strength decreases (i.e. as n decreases).

13. All equations developed by TACOM to describe the effects of slippage and three types of motion resistance (soil compaction, bulldozing, and fluid mud drag) indicate that a long, narrow track outperforms a short, wide one. Thus, "...to achieve the surface crossing, the width of the loading area should be kept as large as possible, particularly in frictional

soils.... However, once the ground is so weak or load so large that the surface crossing must be excluded, b should be kept as small as possible...."[5] The responsibility for determining which type of operational terrain he faces (surface or subsurface crossing) rests with the user of the TACOM system.

Soil parameter system

14. The soil-vehicle relation in terms of load, vehicle geometry, and soil strength and deformation parameters (including both sinkage and slippage) is expressed at TACOM by seven soil parameters: c, ϕ, k_c, k_ϕ, n, K_1, and K_2. These parameters are intended to describe the strength and deformation characteristics of practically any type of soil (or snow) in a manner comparable to the stress-strain measurement of any other material. The lone exception is "half-fluid muds,"[6] whose description requires two other terms, soil viscosity μ and soil density ρ.

15. Measurements of the first seven parameters listed above are obtained with a test instrument called the bevameter, which consists of two principal devices (fig. 6): a ring shear device intended to provide measurement of soil values c, ϕ, K_1, and K_2; and at least two rigid plates of different size used to measure k_c, k_ϕ, and n. Soil reactions under bevameter testing are claimed to be similar to those under tracks.

Possible breakthroughs

16. To allow greater ℓ/t ratios (length of ground contact area ÷ distance between track center lines) than is possible with conventional skid steering[1] (maximum $\ell/t \approx 1.8$), Bekker[5,6] proposes that substantial improvements in the overall form of a tracked vehicle can be made only by departing from conventional practice and producing multiunit, articulated (jointed), trainlike vehicles. A second breakthrough in tracked vehicle design is claimed by Bekker by means of his space-link track.[6]

Criticisms

17. Very little criticism can be directed toward the TACOM soil-track system with regard to its scope. The nature of criticism most often directed at it is rather fundamental and falls into three categories. First, the degree to which the basic TACOM equations can be applied to the

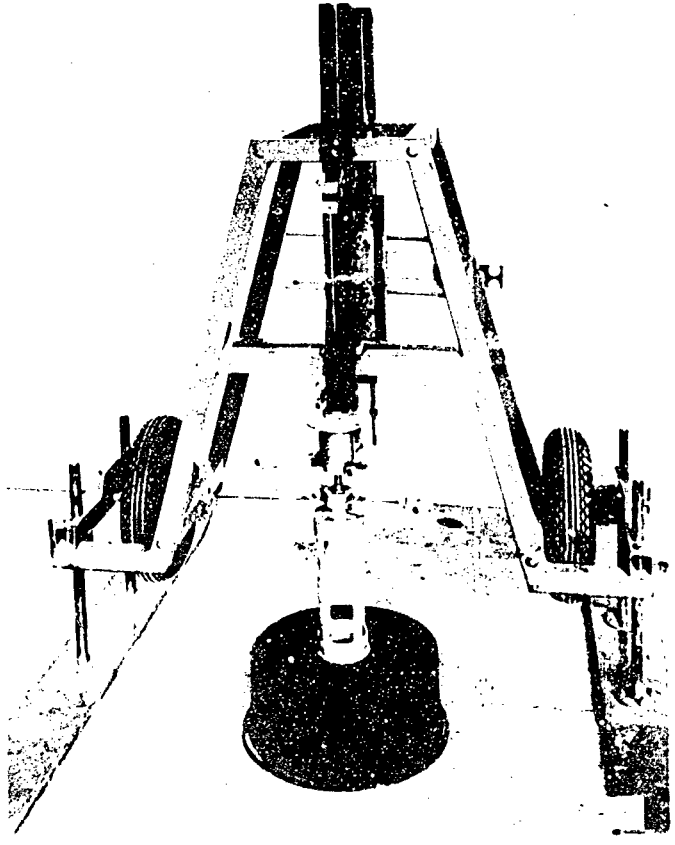

a. Bevameter shear test device

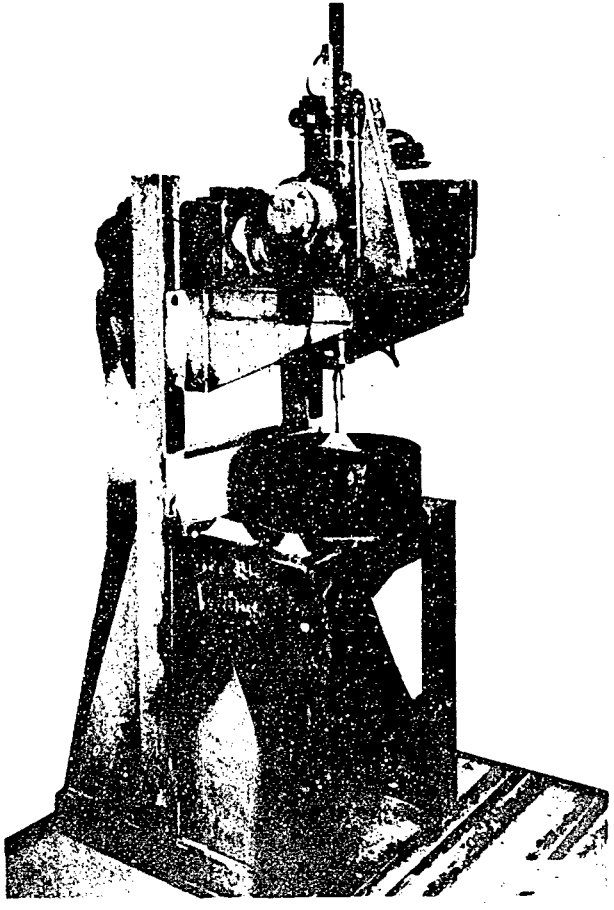

b. Bevameter sinkage test device

Fig. 6. Bevameter test apparatus

soil-track system has been questioned. Several of these equations were adapted from other engineering disciplines (structural soil mechanics, hydraulics, etc.) with practically no modifications made to account for unique soil-track interactions.

18. Second, criticism is made of TACOM's attempt to simulate soil-track performance through use of the bevameter. Many soil-vehicle investigators consider that this use of superposition fails, simply because the plates and the shear rings of the bevameter do not provide soil reactions sufficiently similar to those of a track. This weakness is compounded by the fact that measurements obtained with the bevameter often defy interpretation by the means proposed by TACOM.[9] Values of c and ϕ measured with the ring shear part of the bevameter generally correlate poorly with corresponding measurements obtained with other test instruments. Also, experience has shown that shear-deformation curves generally do not exhibit a rapid decay after maximum strength is attained, so that values of K_1 and K_2 no longer are measured in routine tests. Basic difficulties arise with regard to the plate penetration part of the bevameter, since the pressure-sinkage curves simply do not exhibit a straight-line logarithmic shape for a wide variety of soils, and the two or more plates often produce significantly different curve shapes. TACOM recognizes these problems and has developed a computer program that attempts to minimize their influence in determining the characteristic values of k_c, k_ϕ, and n.

19. The third and most general type of criticism of the TACOM soil-track prediction system is that generally few actual test data are shown to demonstrate to what degree the system works. Certainly, the complexity of the Bekker equations implies considerable insight into the soil-track system, and TACOM claims that these equations describe soil-track behavior not only in detail, but also with considerable accuracy. Detractors of the TACOM system contend that the grandiose equations are based largely on relations developed in other disciplines to describe interactions only generally similar to those of the soil-track system, that modifications to adapt these equations to the soil-track system were made mainly in desk-study operations, and that applicability of the TACOM system remains to be demonstrated. As a case in point, Dr. A. R. Reece concluded after a year of

work at TACOM (where he did mobility research while on sabbatical leave from the University of Newcastle, England), "Bekker's system is not a scientific theory, but an hypothesis."[1]

Conclusion

20. The TACOM system for describing soil-track interactions is the most comprehensive available today. While it is not fully validated by test results, it contains many relations that, if correct, can serve as guideposts in other soil-track investigations.

The Perloff Approach

21. Input data required by Perloff's soft-soil mobility model[10,11] pertain to:

a. Tank design variables

(1) Tank weight

(2) Location of the center of gravity

(3) Length of the base of the track in contact with the ground

(4) Angle between the base and forward inclined portion of the track

(5) Undercarriage clearance

(6) Values of maximum velocity on a rigid surface for various surface inclinations

(7) Track width

b. Soil properties at the grid point in question

(1) Ground surface inclination

(2) Cohesive component of soil strength

(3) Angle of shearing resistance

(4) Data points from the pressure-sinkage relation for the soil

(5) Data points from the expression for shear stress-displacement relation for the soil from direct shear test results

(6) Thickness of the direct shear test specimen

22. While Perloff lists Mohr-Coulomb failure parameters, c and ϕ, and a shear stress-displacement relation (from a direct shear test) as

part of the required soil property data, he provides no directions with respect to how these soil value inputs should be obtained. Perloff uses pressure-sinkage relations for various soils of the general shape he has obtained from model studies. However, he notes for requirement b(4) above that "No generally accepted method for extrapolation of pressure-sinkage data for small scale models to prototype vehicles is currently available ...", and that "No mathematical expressions for this [pressure-sinkage] relationship which are suitable for this study are currently available."[10]

23. Perloff's analysis considers, in a two-dimensional framework, the force system in which a tracked vehicle operates as described by the mechanical equations of equilibrium. His soil-tank model contains at least two iterative procedures of such length and complexity as to require solution either by graphic means or by electronic computer. The iterative procedures are outlined to: (a) determine the location of the center of the mass of soil failed and pushed out of the way (i.e. bulldozed) by the tank when the mass involved is described by a circular failure surface (fig. 7), and (b) determine the sinkage and inclination of the tank based on extrapolation of a model pressure-sinkage relation to the soil-tank system. The equilibrium equations involved in these iterative procedures are nonlinear, and it is not obvious that the algorithm will converge to unique values of center of failed soil mass and tank sinkage and inclination.

24. Perloff analyzes the effect of track slip on vehicle mobility first in terms of its relation to the development of soil shear strength (and subsequent vehicle thrust). In this connection, he proposes a technique to describe soil displacement at every point underneath the track, and assumes this distribution can be expressed in terms of unit shearing stress if the stress-strain relation for the soil is known. Next, he integrates the shear stress distribution (expressed as a function of slip) along the length of the track to obtain the total tractive effort.

25. Perloff considers that track slip substantially increases track sinkage and inclination only after it produces a distortion of the soil that exceeds the soil's "separation distortion." For this condition

> ...actual soil removal occurs [underneath the rear portion of the track], the change in inclination will cause even greater thrust to be required, which will

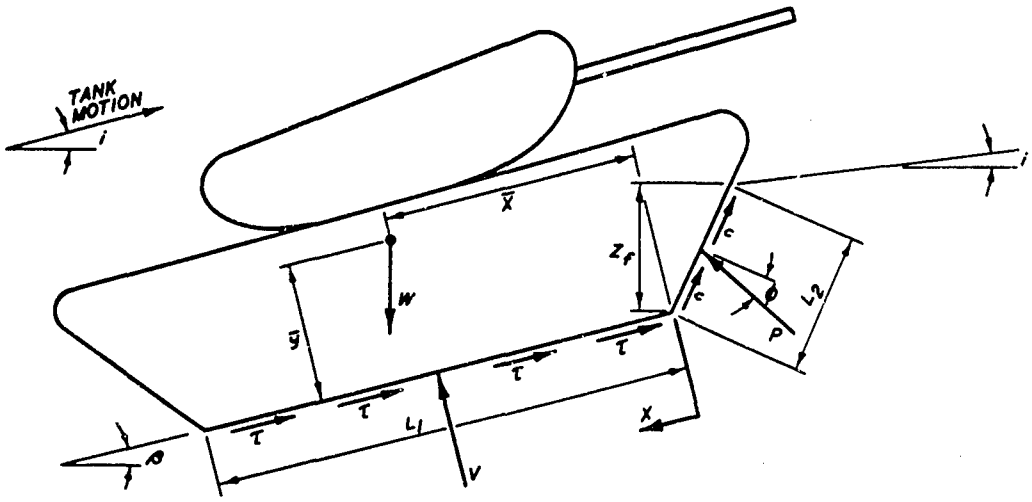

a. SCHEMATIC REPRESENTATION OF A TANK IN THE SOIL

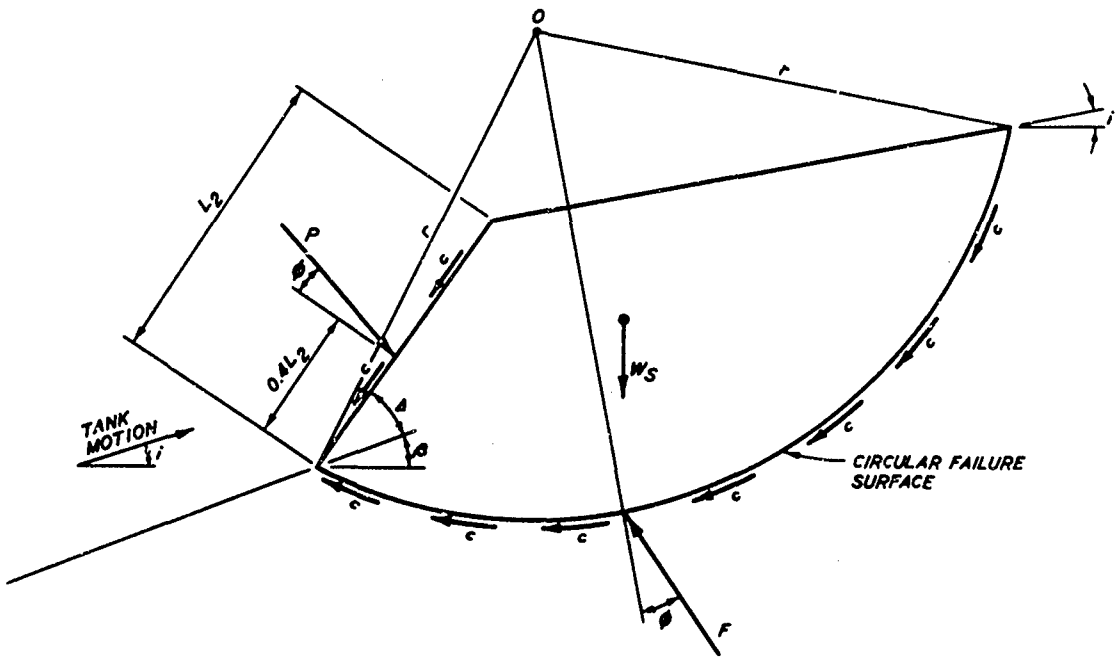

b. FAILURE MASS OF SOIL

Fig. 7. Perloff representation of soil mass failed by tank bulldozing action

> involve more slip, and therefore, more soil removal. Hence, soil removal must lead to an ever deteriorating situation until the rear end sinkage of the tank equals the clearance, and the tank becomes 'hung-up'. The magnitude of slip for which this condition occurs depends upon the soil characteristics. However, for most naturally occurring soils, the slip required is probably greater than that for maximum tractive effort...[10]

26. Finally, Perloff defines two "mobility characteristics." The first, mobility factor k, is the ratio of tractive force required to just initiate or maintain motion T_{req} to the maximum tractive force available T_{max}. T_{req} is determined by setting the sum of forces acting on the base of the track equal to zero and solving for the thrust required in terms of input soil and tank parameters (after the sinkage and inclination have been determined). T_{max} is determined as described in paragraph 24. The second mobility factor, maximum velocity in soft soil, requires as input data the maximum velocity on hard pavement as a function of slope. This value is then transformed to in-soil maximum velocity at that slope by an alteration involving track slip.

27. Many simplifying assumptions were required in developing the Perloff model, and he concludes, "Although it is believed that the analysis leads to results which are reasonable, and which will serve to distinguish the mobility characteristics of tank design candidates, there is not yet any experimental verification of its predictive capability."[10] Since no test data have been examined by means of Perloff's approach, the principles set forth therein can only be considered as hypotheses at this time.

WES Trafficability Method

28. The WES technique for predicting tracked vehicle mobility[12] is based on empirical relations developed from hundreds of vehicle field tests. Correlation has been established between mobility index, defined solely in terms of the characteristics of the vehicle, and vehicle cone index, which describes in-the-field vehicle performance. Since mobility index values have been determined for virtually all conventional military tracked vehicles, the WES trafficability method is operable on a very broad scale today.

Two formulas for mobility index, one for the towed and one for the self-propelled condition, are presented in Appendix B. Vehicle cone index is defined for the self-propelled conditions as the "...index assigned to a given vehicle that indicates the minimum soil strength in terms of rating cone index required for 40 to 50 passes of the vehicle." Mobility index of a vehicle is related to the vehicle cone index by the relation shown in fig. 8.

29. Rating cone index is the product obtained by multiplying two measurements: (a) cone index, obtained with the cone penetrometer, and (b) remolding index, the ratio of remolded soil strength to original strength. Rating cone index is measured in the so-called critical layer of soil, i.e. that considered to have most influence on a vehicle's mobility. The depth of this critical layer varies with weight and type of vehicle and the soil profile, but it is generally the layer lying approximately 15 to 30 cm below the surface.

30. Rating cone index equal to 50 percent of the vehicle cone index usually is adequate to permit one or two straight-line passes of a vehicle. Also, a recent study has developed relations that allow one-pass, straight-line trafficability to be predicted on the basis of the value of a vehicle cone index determined in a manner slightly different from the one for 40- to 50-pass performance.[13]

31. Single-pass, towed, tracked vehicle performance is expressed as a function of rating cone index in fig. 9. In fig. 10, maximum tractive effort, i.e. the maximum continuous towing force or pull a vehicle can exert expressed as a ratio or percentage of its own weight, is expressed as a function of the difference between rating cone index in the critical layer and vehicle cone index for self-propelled tracked vehicles. Though tractive effort and maximum slope climbable (both expressed as percents) are not precisely equal, fig. 10 can be used also to obtain an estimate of maximum slope climbable.

32. The WES trafficability method, developed almost entirely by empirical means, lacks some of the definitive features, i.e. detailed explanations of just how a soil-track interaction is produced, that are usually found in a model based primarily on theoretical considerations. Generally,

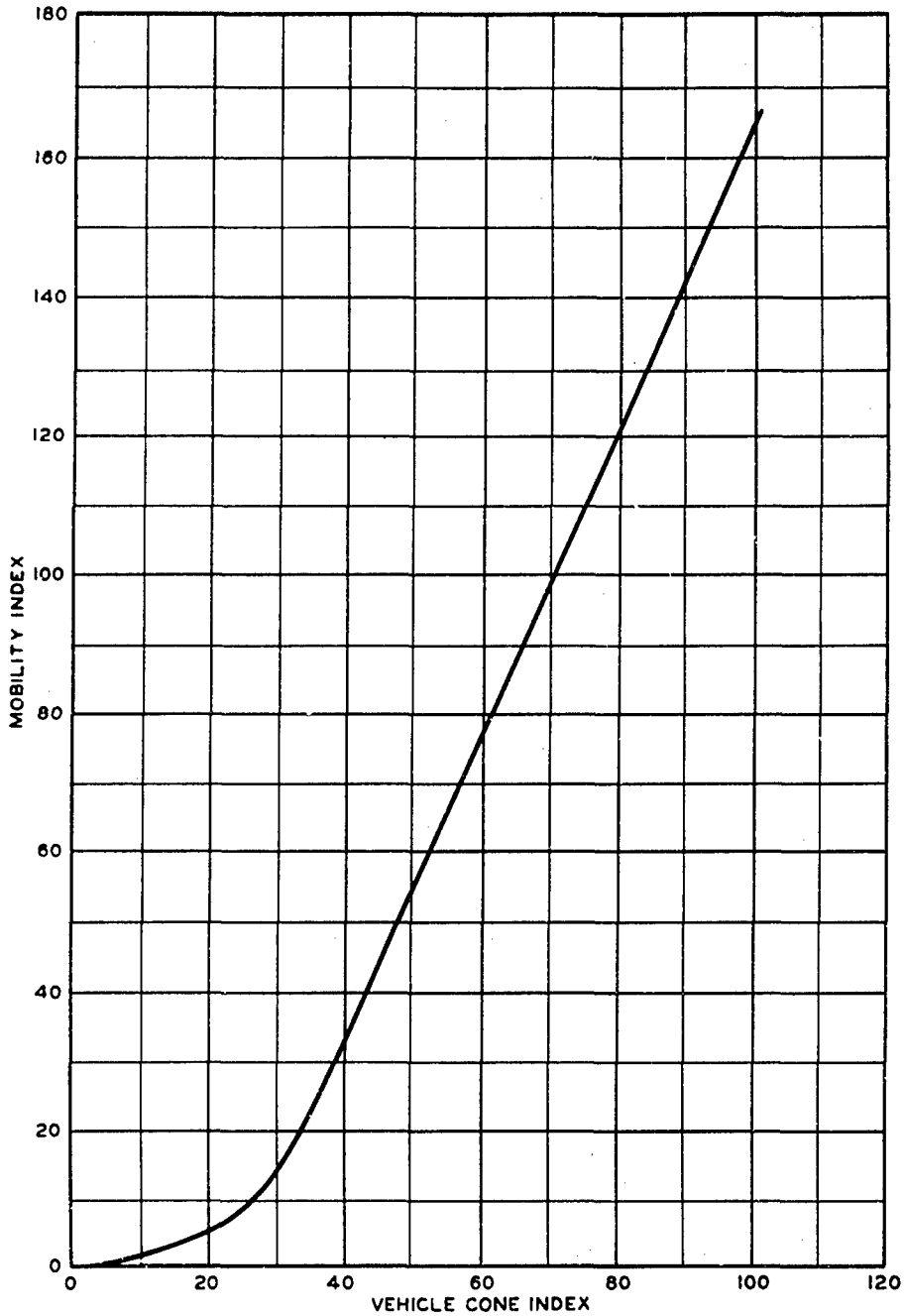

Fig. 8. Mobility index versus vehicle cone index

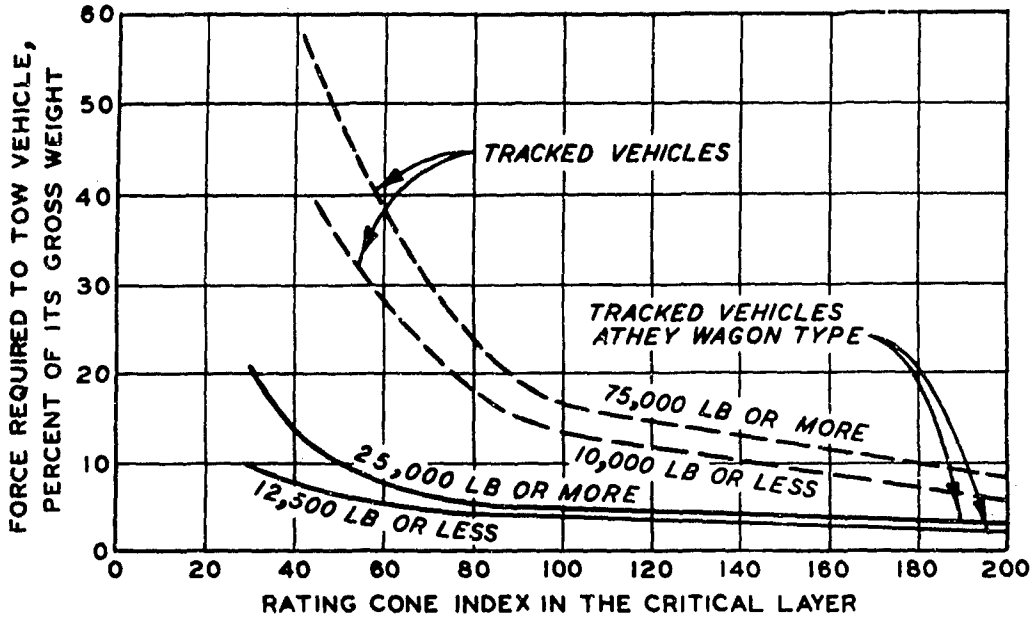

NOTE: THE TOWING FORCE IN SOFT AREAS WHERE VEHICLES ARE BOGGED DOWN MAY EQUAL OR EXCEED WEIGHT OF VEHICLE.

THESE CRITERIA ALSO APPLY TO SELF-PROPELLED VEHICLES BEING TOWED WITH MOTOR DEAD.

CURVES APPLY TO TRACKED VEHICLES BEING TOWED ON LEVEL FINE-GRAINED SOILS OR SANDS WITH FINES, POORLY DRAINED.

Fig. 9. Performance curves for towed tracked vehicles

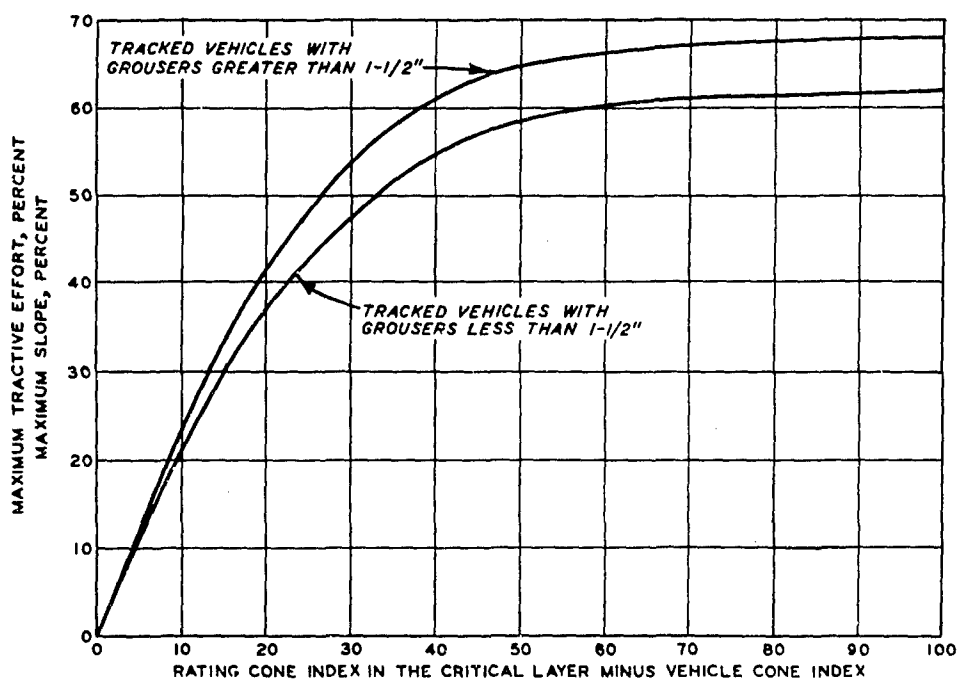

Fig. 10. Performance curves for self-propelled tracked vehicles

in-the-field, full-scale testing and empirical analysis lead to predictions of gross, overall results and allow little opportunity to examine systematically and in detail the effects on performance of individual soil-track parameters. The major accomplishment of the WES trafficability method is that it has proved workable in describing and cataloging overall tracked vehicle performance for a very broad range of soil-track conditions. As a minimum, this method serves a very useful purpose in this application; furthermore, it provides information that can be used in a more detailed, systematic study of the soil-track system.

Other Investigations

33. The very large number of parameters required to describe the soil-track system completely has fostered studies of a very large number of soil-track subsystems in addition to studies of the soil-track system as a whole. Many investigators, in addition to those previously mentioned, have examined these systems with varying degrees of success. It is somewhat discouraging to find that independent testing has led to quite different conclusions with respect to the influence on performance of several track parameters, e.g. location of track center of gravity,[14,15,16] track tension and pressure distribution,[16,17] track-shoe geometry,[6,16,18,19,20] and road-wheel size and spacing.[6,21,22] Differences in test setups, particularly with regard to soil conditions, probably contributed greatly to this confusing situation.

34. In addition to conflicting results from physical testing, there also are conflicting concepts with regard to how a track operates in soil. Probably no better example of this can be found than the opposing points of view of Bekker[7] and Reece[18] with respect to track slip and excavation. Bekker contends that, for a track operating at a constant positive slip, horizontal soil distortion (and sinkage) accumulates linearly from track front to rear, causing the track to assume a tail-down trim angle. For this same situation, Reece says that a track grouser, after entering the soil, slips a distance equal to slip times track link pitch before the next grouser enters; each successive grouser acts in the same manner, excavates

the same amount of soil, and then moves it from front to rear. Thus, Reece contends that all excavation is concentrated at the front of the track. Neither Bekker nor Reece offers quantitative test data to support his hypothesis, in part because track sinkage depends not only on excavation but also on other factors, such as vertical loading and slip.

35. Perhaps Nuttall[1] summarizes best the overall results of track studies to date in observing that

> ...the soil mechanics of tracks is fragmented by lack of an accepted, validated soil value system.... At the moment, precision of quantitative predictions of tracked vehicle performance is quite low, particularly in critical situations where sinkage and slip are high and bellying incipient.... Available first-order analytical methods for calculating the performance of tracked vehicles...show that...simple nominal unit ground pressure...overwhelmingly controls the basic level of performance of practical vehicles.

Generally, those elements in prediction equations for tracks that do not relate directly to a description of nominal ground pressure

> ...reflect the less-than-ideal pressure distribution which occurs under a track, but in practice these have but small influence upon the calculations of ultimate go, no-go soil limits.

Nuttall shares Bekker's view that articulation (jointing) between different units of a tracked vehicle train represents a good opportunity for a breakthrough in tracked vehicle design, since articulation breaks the steering barrier.

36. Nuttall proposes that the most useful approach to the analysis of the soil-track system should involve dimensional reasoning because, although a dimensional analysis is incomplete, it demands the same degree of basic understanding of the phenomenon under study as any more complete analysis of equal validity and refinement. The measurable properties of the overall soil-vehicle system used in formulating the one must be identical with those used in the other. Nuttall reasons that

> ...dimensionally oriented experimentation, exploiting scale change as a major controllable variable, can be a particularly powerful means to study the validity both of general soil-vehicle concepts and of proposed soil-value systems. If the validity of a dimensional analysis cannot be satisfactorily and widely demonstrated,

> neither can that of any more formal analysis starting from the same premises.

Thus, dimensional analysis is particularly attractive for use in analyzing systems like the soil-track system, in which complex interactions take place that are definable only by some rather imprecise prior knowledge of the predominant forces, dimensions, and time-dependent variables involved.

PART III: THE WES MODEL TRACK AND TEST ARRANGEMENTS

Laboratory Model Track

37. The test program described herein is being conducted in the same facilities used for the WES study of the performance of soils under tire loads.[4] The laboratory model track was fabricated by WNRE, Inc., following a cooperative design effort by WNRE, Inc., and the WES. It is a fairly large-scale (about one-third to one-half the size of most conventional tracks), single-track system designed for use in a dynamometer carriage-soil bin arrangement. The track is large enough to keep manageable those problems sometimes encountered in scaling test results from model to prototype. Just as important, the track system is extremely versatile. For example, some of the adjustments that can be made in geometric features of the track are shown in fig. 11. This versatility is essential for a detailed examination of the soil-track system, since soil-track interactions and resultant track performance depend to varying degrees on a very large number of parameters. Control of the model track variables that are considered to have a reasonable chance of significantly influencing straight-line performance in soil is discussed in the following paragraphs.

Location of at-rest center of gravity (RCG)

38. Load to the track is applied through an axle that can be moved horizontally in 5.1-cm increments to a maximum of 61.0 cm to the front and 45.7 cm to the rear of the geometric center of the long track (fig. 11a), and 30.5 cm to the front or 15.2 cm to the rear of the geometric center of the short track (fig. 11b); no adjustment is provided for moving the vertical position of the load axle. The periphery of the track is nearly symmetric about its vertical center line, but the drive-end half of the track is heavier because of the additional weight of equipment associated with the drive sprocket. The main body of the track (excluding motor assemblies, load cell to motor adapters, deadweights, stop load and deadweight brackets, and track belts and shoes) can be swung in air from three widely separated locations on the track so that the intersection of plumb lines dropped from those three points defines that body's RCG. Each component of the

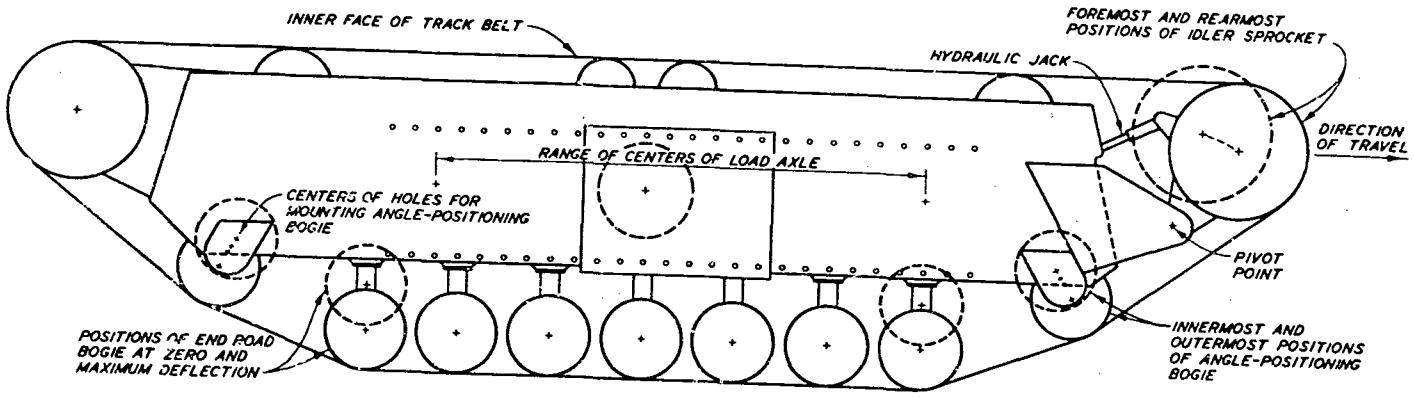

a. LONG CONFIGURATION

NOTE: GEOMETRICAL FEATURES OF THE SHORT TRACK CONFIGURATION MATCH THOSE OF THE LONG CONFIGURATION EXCEPT FOR THE FEATURES SHOWN BELOW.

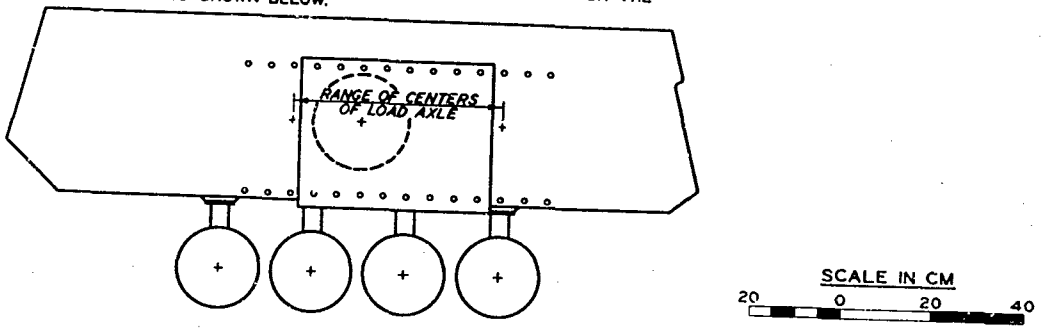

b. SHORT CONFIGURATION

Fig. 11. Schematic side view of model track configurations

track stripped from the main body can be weighed and the location of its RCG determined relative to a reference point on the track hull, thus allowing determination of the location of the overall track's RCG by means of simple moment equations.

39. The horizontal location of the RCG for any particular track size can be moved to any of a wide range of positions by changing the magnitude and/or location of (a) load applied through the load axle and (b) load applied by deadweights or other means at any point away from the load axle. Except for extreme cases, these changes influence the vertical location of the RCG only slightly.

40. The location of the dynamic center of gravity (DCG), i.e. the point through which all forces in the soil-track system can be considered to act, almost certainly has more influence on track performance than that of the RCG. However, the location and direction of soil forces developed by track action change as a function of track slip, track trim angle, mode of soil failure, etc.; such changes can be only roughly approximated at the present state-of-the-art. Since the DCG is, in fact, a dependent parameter, the RCG, an independent parameter, is used for test control purposes.

Track-ground contact width
and length, nominal (b and ℓ)

41. Three track widths (15.2, 30.5, and 61.0 cm) at each of two hard-surface track-ground contact lengths (61.0 and 121.9 cm) can be achieved with the presently available tracks and track frame housings. The in-soil contact length can be determined from the known shape of the track periphery and the inclination and sinkage of the track, which are recorded continuously during a test. Since track-ground surface contact length is a dependent parameter, track-ground contact length on a hard surface, an independent parameter, is used for test control.

Angle of approach and
angle of departure (α and β)

42. The periphery of the track between the end road bogie and the track sprocket (at either the front or rear of the track) consists primarily of two straight lines. At either end, the primary adjustment of the inclination of these lines to the horizontal is made by securing the mounting

pin of the angle-positioning bogie in one of the four holes in the mounting brackets on either side of the track housing (fig. 11). The inclination of the lower line is also influenced by the vertical position of the end road bogies, which position changes as a function of applied load and bogie pressure level; maximum travel of each road bogie is 10 cm. Finally, the idler (but not the drive) sprocket can be moved through an arc determined by a pivot point and the extension of a regulated hydraulic jack (fig. 11), thus influencing the inclination of the upper line at the idler sprocket end of the track. Possible values of the angle to the horizontal of the lower inclined line range from 21.5 to 33.0 deg with the end bogie fully extended, and from 5.5 to 18.5 deg with it fully depressed. Angles to the horizontal of the upper inclined line range from 30.5 to 39.0 deg at the drive sprocket end of the track; at the idler sprocket end, they range from 36.0 to 46.0 deg with the angle-positioning bogie in its outermost position, and from 28.0 to 37.5 deg with it in its innermost position (ranges of these values are produced by different extensions of the hydraulic jack). Until track sinkage exceeds the vertical height of the positioning bogie, only the lower angle influences track performance; after this sinkage is exceeded, both the lower and upper angles influence performance. For control purposes, only the lower angle at either end of the track is specified (approach angle α, and departure angle β).

Track-belt tension

43. Tensile force within the track belt is difficult to measure directly. The stretching, contracting, flexing, etc., of the rubber-and-fabric track belt make it quite difficult to implant, maintain, and obtain accurate measurements from small force-measuring devices (strain gage cells, etc.) within the body of the track belt. For control purposes in routine tests, the relative tightness of the track is indicated by a regulated hydraulic jack that exerts outward pressure on the idler sprocket. The pressure level of the cylinder is continuously recorded during the course of a test and provides an indication of the force applied through the idler sprocket to the track belt and, hence, an index of track-belt tension at the idler sprocket. An estimate of the tensile force within the track belt(s) in the vicinity of the idler sprocket can be obtained from a

free-body diagram (fig. 12). Force exerted is equal to hydraulic jack pressure P times inner chamber cross-section area A . Pressure range is 0-20,700 kN/m^2, and inner chamber area is 7.9 cm^2.

$$\Sigma \overset{\rightarrow +}{F}_H : \quad PA \cos a - (X_1 + X_2 \sin b) = 0$$

$$\Sigma F_V^{+\uparrow} : \quad PA \sin a - X_2 \cos b = 0$$

$$X_2 = PA \frac{\sin a}{\cos b}$$

$$X_1 = PA \, [\cos a - (\sin a)(\tan b)]$$

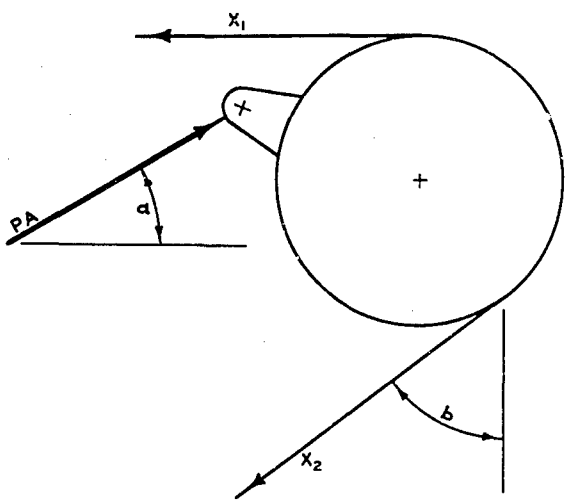

Fig. 12. Force at track idler sprocket

Track-shoe spacing,
<u>height, and thickness (fig. 2)</u>

44. Spacing between adjacent track shoes is increased by removing one or more shoes between each successive pair left in place. With all shoes in place, track-shoe spacing is 3.0 cm. Three sets of 15.2-cm-wide track shoes are on hand, with heights of 1.3, 2.5, and 5.1 cm. The 30.5- and 61.0-cm-wide track shoes all have the same height (2.5 cm). All track shoes are 0.32 cm thick. For each track width, a set of shoes is on hand with track-shoe opening equal to 7.7 cm. Available also are two additional

sets of 61.0-cm-wide shoes with 7.1- and 6.2-cm shoe openings, respectively. These shoes of different openings can be bolted inside each other to build a set of thicker track shoes, each composite shoe consisting of either two or three shoes.

Road-wheel spacing and size

44. With the available track frame housings, the front and rear wheels are either 61.0 or 121.9 cm apart. At minimum spacing, adjacent road wheels within these lengths are 20.3 cm apart. Spacing within the 121.9-cm length can be doubled by removing every other road wheel, starting one wheel from either end. Since an odd number of road-wheel spacings is included within the 61.0-cm length, it is not practical to increase the spacing from 20.3 cm. Only one size of road wheel, 17.8-cm diameter, is presently available. Other sizes will be used at a later date.

Pressure in road bogies and its distribution

46. One 10-cm-diam positive-load pneumatic cylinder per road wheel applies an outwardly directed force of 8.1 N for each kN/m^2 gage pressure. Maximum usable pressure in the road bogies is approximately 620 kN/m^2. These pneumatic units are individually regulated and instrumented to provide a continuous record of pressure throughout a test.

Drive sprocket

47. The WES model track is chain driven by a 16.5-cm-track-drive-radius sprocket wheel capable of operating either clockwise or counterclockwise. Thus, the model track can be tested equally well as a rear-drive or a front-drive unit.

Track-frame trim angle

48. Though generally considered a dependent variable, track-frame trim angle can be treated as an independent variable if it is maintained constant at a prescribed level by a (dependent) restraining force. (The fixed-trim-angle test mode is described in paragraphs 68-70.) The values of track-belt trim angle and track-frame trim angle match only if the distance between each road wheel and the track frame is maintained at a single value: otherwise, these angles differ as a function of the magnitude and distribution of test load, pressure in the road bogies, and soil strength.

The model track can be tested at values of track-frame trim angle from zero to about 30 deg.

Other track dimensions

49. Several important track performance parameters almost certainly are related to linear track dimensions. For example, torque depends on track drive radius, and sinkage very likely depends on one or more track dimensions. External forces transmitted to the track, e.g. the force generated by a bulldozer blade pushing soil or by a vehicle being towed by the track, must be described in terms of magnitude, position, and inclination. Possibly, the effect of such forces can be described by their influence on the position of the track's center of gravity (CG), which position requires two linear track dimensions for its description. In any case, any number of linear track dimensions or functions thereof are subject to being used to describe track performance.

Test Facilities and Equipment

WES model track assembly

50. The model track assembly was designed for testing in the same facilities used previously for tests on tires.[4] Major components of the assembly are specified in the following tabulation:

[illegible]

51. The model track can be tested in either of two dynamometer carriage-soil bin arrangements. A description of each test system follows.

Intermediate-scale test carriage and soil test bins

52. The carriage is supported by solid, rubber-tired rollers that ride on a pair of accurately aligned and leveled overhead rails that are, in turn, suspended from columns and cantilevered crossarms. The carriage is towed by an endless cable that is fastened fore and aft to the carriage, passes over pulleys near the ends of the test building, and is driven by sheaves mounted on a platform above the overhead rails. The towing cable is positioned above the center line of the test lane that is formed by joining movable soil bins (0.81 by 1.63 by 8.23 m) end to end. For tests of the model track, the speed of the cable can be varied continuously from zero to about 0.5 m/sec. The transverse position of the track carriage cannot be changed, so tests can be conducted only along the longitudinal center line of the test bins.

53. The model track is mounted in the carriage by securing the outer ends of an axle assembly (whose inner ends attach to the track frame housing) into sockets located between the inner and outer walls of the sides of the dynamometer carriage (fig. 13). Within each of these sockets, a 17.8-kN-capacity, two-component dynamometer measures both the vertical force (load) and the horizontal force (drawbar pull) imparted to it by the model track. Load can be applied to the track either by the addition of deadweights or by eight 20.3-cm-diam, single-acting, pneumatic cylinders set in pairs (one positive and one negative load or lift) at the front and rear of each side of the test carriage. Under zero pressure to the cylinders, the weight of the track is independent of the weight of the carriage and consists of the track and axle assemblies. Maximum usable test load (approximately 8.9 kN) is limited not by the capacity of the cylinders, but by the structural capacity of other components of the track system (roller wheels, etc.). The sensitivity of the loading system allows tests to be conducted at very light loads (to about 1.5 kN or smaller). Air storage tanks provide a reserve air supply to compensate for movement of the loading cylinders caused by sinkage of the track.

54. An electric motor atop the carriage drives a hydraulic pump that sends oil from a reservoir to each of two 20-hp synchronized hydraulic

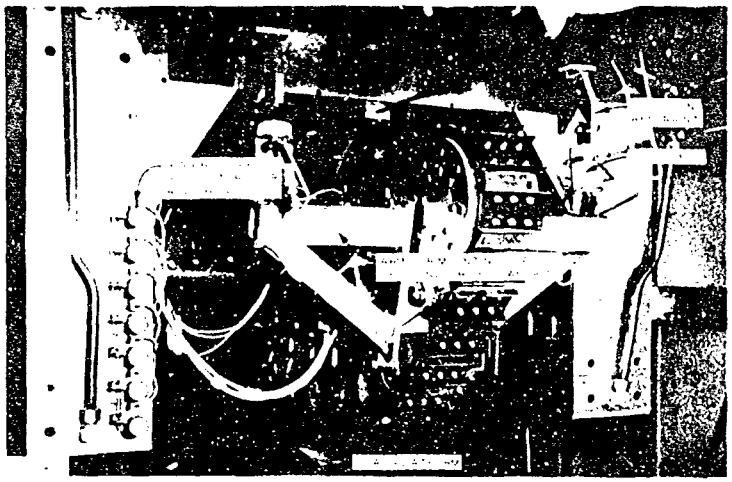

a. Front view of 15.2- by 61.0-cm track

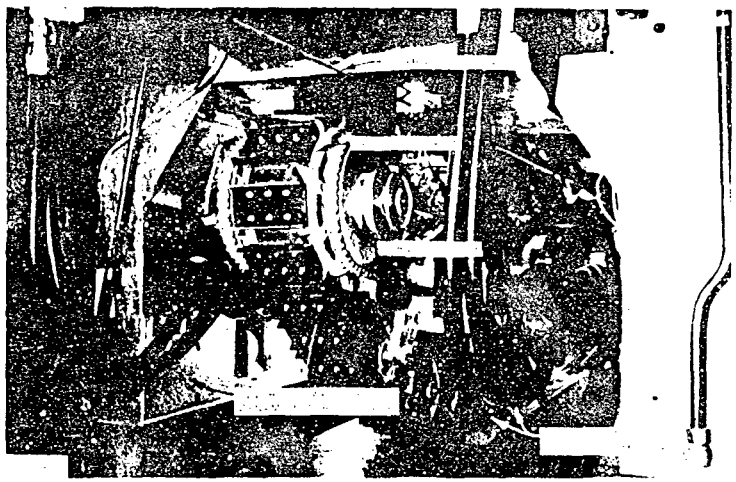

b. Rear view of 15.2- by 61.0-cm track

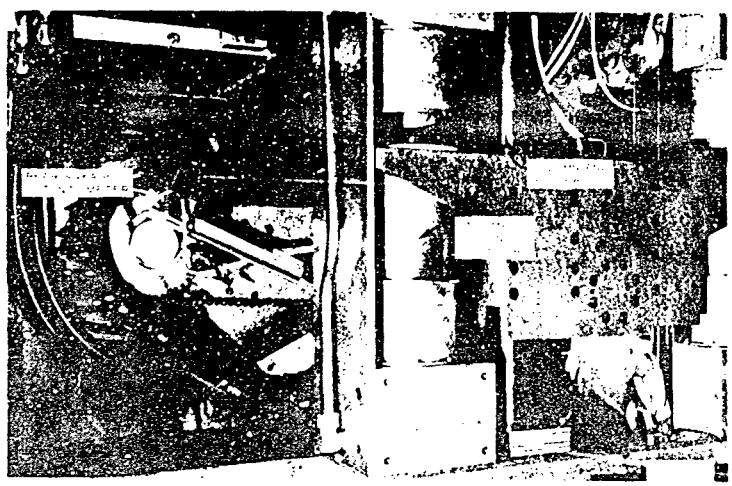

c. Side view of 61.0- by 61.0-cm track and dynamometer carriage

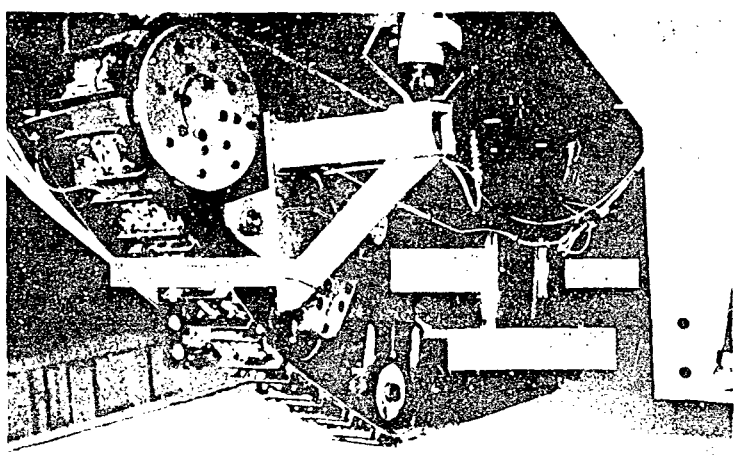

d. 15.2- by 121.9-cm track in sand

Fig. 13. WES model track in intermediate-scale carriage

motors, one located on each side of the track and within the axle assembly. Power from these hydraulic motors is transferred to the drive sprocket by means of a chain drive. Torque developed at the rear sprocket is measured by a torque sensor of 8.0-m-kN capacity. Free vertical movement of the track is achieved by a column-and-roller assembly mounted on each side of the carriage. In-soil vertical movement of the track is measured by linear potentiometers located at the lead axle and at a point near the rear of the track. The distance between these points is known, and continuous recordings are made of vertical positions of the two points so that track trim angle can be computed for any instant during the course of a test. Deflection of each road bogie is measured by a linear potentiometer mounted alongside the bogie, and the air pressure level of each road-bogie pneumatic cylinder is monitored by a regulator of 414-kN/m^2 capacity (fig. 13a).

56. The primary advantage of the intermediate-scale arrangement is its utility in testing the model track under light loads; however, the system has two serious drawbacks: (a) The cross-sectional size of the soil bins is small relative to the size of some of the tracks, the 61.0-cm-wide track in particular: thus, test results might be influenced to some degree by boundary conditions imposed by the bins. (b) Probably even more serious, the clearance between the top of the track and the carriage tow cable is just 15 cm when the track is level at zero sinkage. To prevent the top of the track from striking the cable during the course of a test, two restraints were constructed, one on each side of the front of the test carriage (fig. 13a). Two load cells were mounted on arms built on each side of the track to engage these restraints just prior to cable-track impact. This construction eliminates the collison problem, but alters the soil-track system in that the maximum in-soil trim angle of the track is limited to about 1[illegible] deg. and the DCG of the track is changed by the force of striking the restraints.

Large-scale test carriage and soil test pit

57. Because of the drawbacks listed in paragraph 55, the model track is better suited to testing in the WES large-scale dynamometer test carriage. This carriage rides on two standard-size, railroad-type rails that

are accurately leveled and spaced 3.56 m apart (fig. 14). Each rail is set in concrete at ground level at a distance of 15 cm outside the vertical side walls of the test pit over which the carriage travels. The pit is concrete-lined, is 54.9 m long and 3.56 m wide, and slopes from 1.83 m deep 5.48 m from one end, to 1.93 m deep 6.40 m from the other end. A 3.05-m-long service platform is located within the 6.40-m end of the pit and the 5.48-m end is inclined at 3:1 slope to allow entrance and exit of large test vehicles or other equipment. Each wheel of the test carriage is driven by a 7-1/2-hp d-c electric motor; and all four motors are powered by a generator located near the rear of the test frame on which the dynamometer carriage rides (fig. 14b). For tests with the model track, the speed of the dynamometer carriage and test frame can be varied continuously from zero to about 0.6 m/sec. The test carriage and the track within it can be moved transversely 33 cm to either side of the center line, so tests can be conducted on more than one traffic lane when appropriate.

57. The track and inner frame of the test carriage assembly are suspended from the outer frame at two hinges (one on each side of the test carriage) that are strain gaged to measure force (fig. 15). The inner frame is restrained from turning about the hinges by two load cells (one on each side of the test carriage), each cell mounted horizontally between one point on the inner frame and another on the outer frame, such that the load cell causes the inner frame to be aligned vertically. Four 25-cm-diam pneumatic cylinders (three lift and one load) react between the inner frame and the rigid floor of the carriage bed to control the net vertical load actually applied to the strain-gaged hinges. Deadweight of the entire inner frame (excluding the track) is approximately 49 kN. The capacity of the hinged strain gages is 44.5 kN each, and that of the horizontally mounted load cells is 22.2 kN each. To allow the large-scale test system to apply the maximum design load (27 kN) to the track, the seven low-capacity (414 kN/m^2) air pressure regulators for the road bogies were replaced with fast-acting, solenoid-operated ones of 1380-kN/m^2 capacity each. The outer frame (and the inner frame with it) moves vertically within guides on each side of the carriage as a function of (a) pressure within the load and lift pneumatic cylinders and (b) sinkage of the track in soil. Drawbar pull and

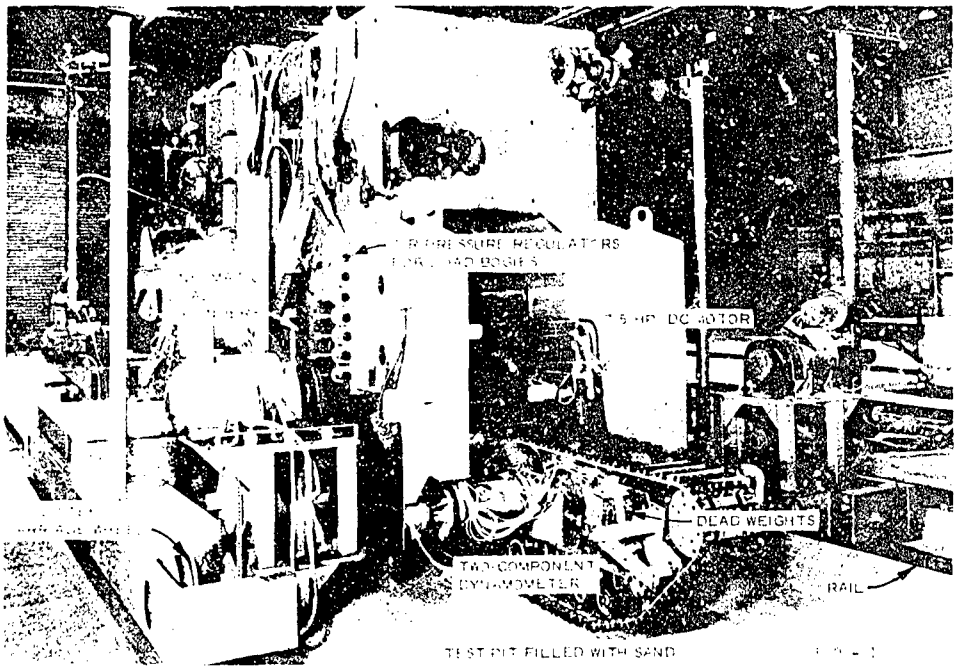

a. Front view of 30.5-cm by 121.9-cm track mounted in large-scale test carriage

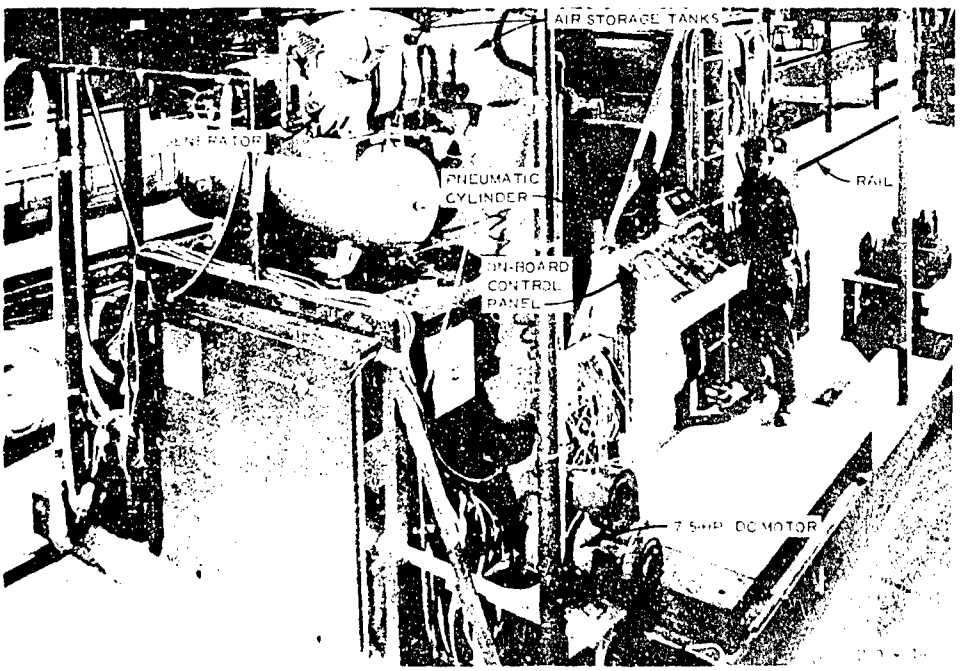

b. Rear view of test frame and on-board support equipment

Fig. 14. WES model track in large-scale test carriage

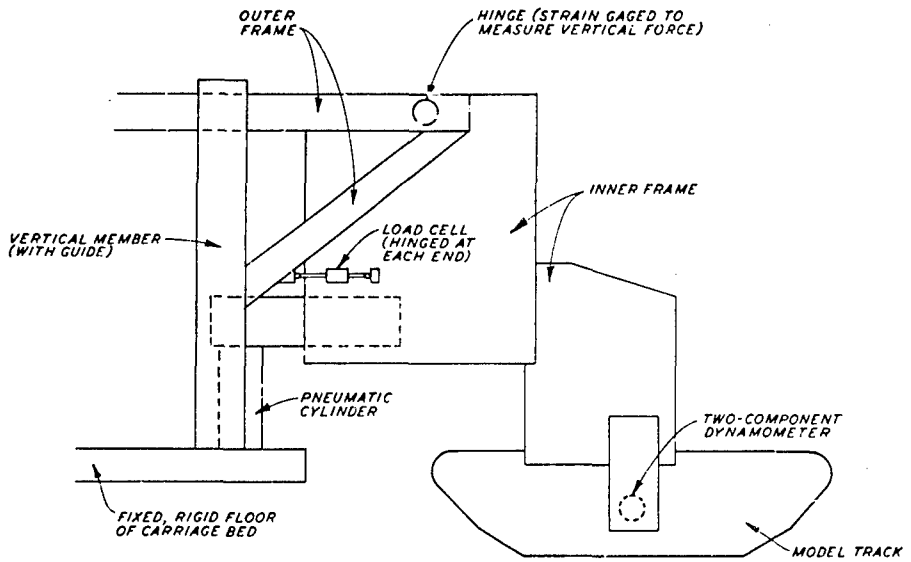

Fig. 15. Force-measuring systems for the model track mounted in the large-scale test carriage

load can be measured by the horizontally mounted load cells and the strain-gaged hinges, respectively, or by the two 17.8-kN-capacity, two-component dynamometers of the track axle assembly. Thus, two completely independent systems are available for measuring pull and load when the track is tested in the large-scale test carriage.

Techniques applicable to both test systems

58. Except as noted previously, the intermediate-scale and large-scale test arrangements are similar. In both facilities, tests are conducted primarily in two types of soils: (a) nearly saturated fine-grained clays and silts and (b) air-dry coarse-grained sands. Procedures for processing these soils in the test bins are described in reference 4; corresponding procedures are carried out on a somewhat larger scale in the test pits. In both facilities, the model track can be instrumented to provide two continuous recordings of each of the following variables: load, torque, pull, sinkage at the load point, sinkage at a point near the rear of the track, deflection of each of the road bogies, pressure in the road bogies, track tension, track speed, and carriage speed. Records are printed in both numeral form by an on-line digital computer and trace form by

multi channel oscillographs. Reduction of test data is routinely accomplished through computer operations, since this requires considerably less time and manpower than is needed to extract the data from oscillograph recordings. The oscillograph recordings are used both in a backup role (i.e. to provide a check on the accuracy of the digital readings) and for visual checks after each test is run to determine whether all systems were operating properly and the test appears to be a valid one. A comprehensive and accurate representation of the in-soil track performance can be obtained from either recording of the variables.

PART IV: LABORATORY EVALUATION OF TRACK PERFORMANCE

Some Considerations Pertinent to Testing Single Tracks

Track versus wheel

59. A single wheel can be abstracted to an elementary running gear that can be studied independently of a vehicle. A single track, however, exhibits actions closely related to the vehicle as a whole. Thus, study of such variables as dynamic soil pressure redistribution (which corresponds to dynamic weight transfer of wheeled vehicles) and trim angle (which corresponds to differential sinkage of front and rear wheels of a wheeled vehicle) must be considered an integral part of a soil-track test program.

Location of center of gravity

60. Also, in contrast to wheels, whose CG is always at the axle,* the WES model track can have its RCG moved within considerable limits as a function of location of the load axle, the magnitude of load acting at the axle, the magnitude and location of deadweights, and, to a lesser extent, track width and length and the position of the idler sprocket wheel. More important to track performance than the RCG, however, is the DCG, i.e. the point where all force vectors acting on the track during a test intersect. The forces are:

a. The resultant of the interface forces.

b. The gravity forces of the track.

c. The load.

d. The drawbar pull.

For a particular track operating at a particular slip value on a soil of given strength, location of the DCG is a test-dependent variable affected primarily by track trim angle, dynamic pressure redistribution, and drawbar pull. To obtain at least a qualitative insight into this multiple interdependence, consider the free-body diagram of the WES model soil-track system in a simplified case, i.e. without soil reactions at the front and rear soil-track interfaces. The track with load axle mounted ahead of and

---

* Small differences due to tire deflection can be neglected.

below* the RCG is shown in fig. 16, where

W = axle load at the load point (LP)

W' = weight of the track system

W_t = resultant of $W + W'$

P = pull

N = normal soil reaction resultant

T = tangential soil reaction resultant

N_s = resultant of $N + T$

The equilibrium equations are:

$$Nx - Td - W'(a \cos \theta + c \sin \theta) = 0 \tag{7}$$

$$P + N \sin \theta - T \cos \theta = 0 \tag{8}$$

$$W + W' - N \cos \theta - T \sin \theta = 0 \tag{9}$$

For a purely frictional soil ($c = 0$), the force T can be expressed as a function of the normal force N.

$$T = \lambda N \qquad (\lambda \leq \tan \phi) \tag{10}$$

where λ is a soil-condition constant. Equation 10 shows that the track can utilize up to the maximum possible amount of frictional force available in rupture patterns at the soil-track interface. If λ is assumed to be independent of the trim angle θ, incorporation of equation 10 with equations 7-9 can lead to an expression for x in terms of properties of the loaded track and soil property λ:

$$Nx - Td - W'(a \cos \theta + c \sin \theta) = 0 \quad \text{(From equation 7)}$$

By rearranging:

---

* Because of the construction of the WES track, the load axle is always slightly below the RCG.

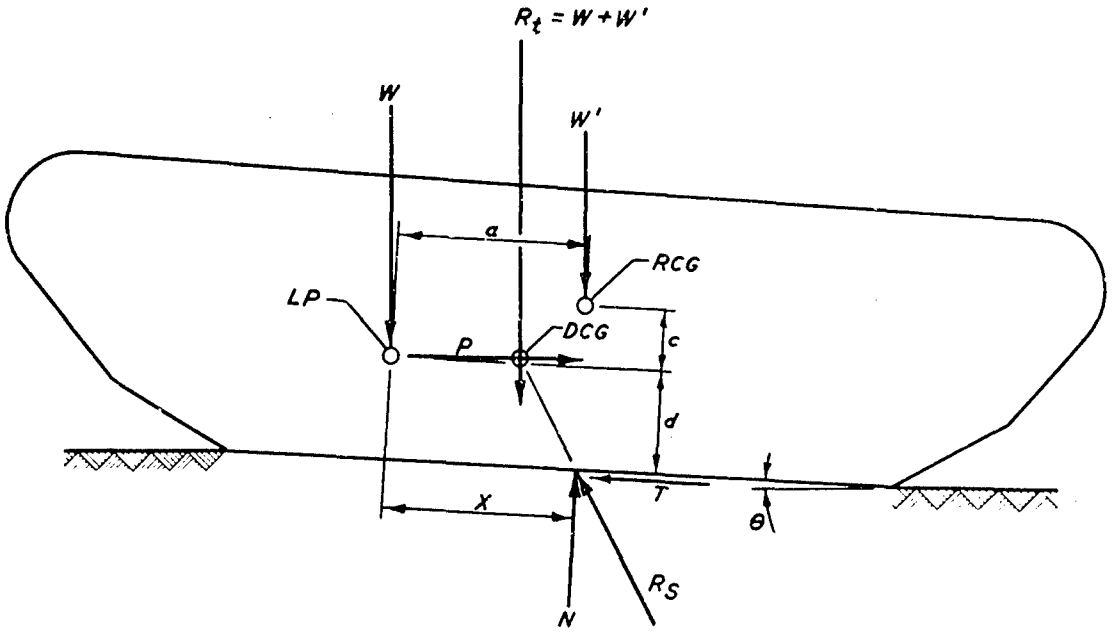

a. SMALL TRIM ANGLE θ

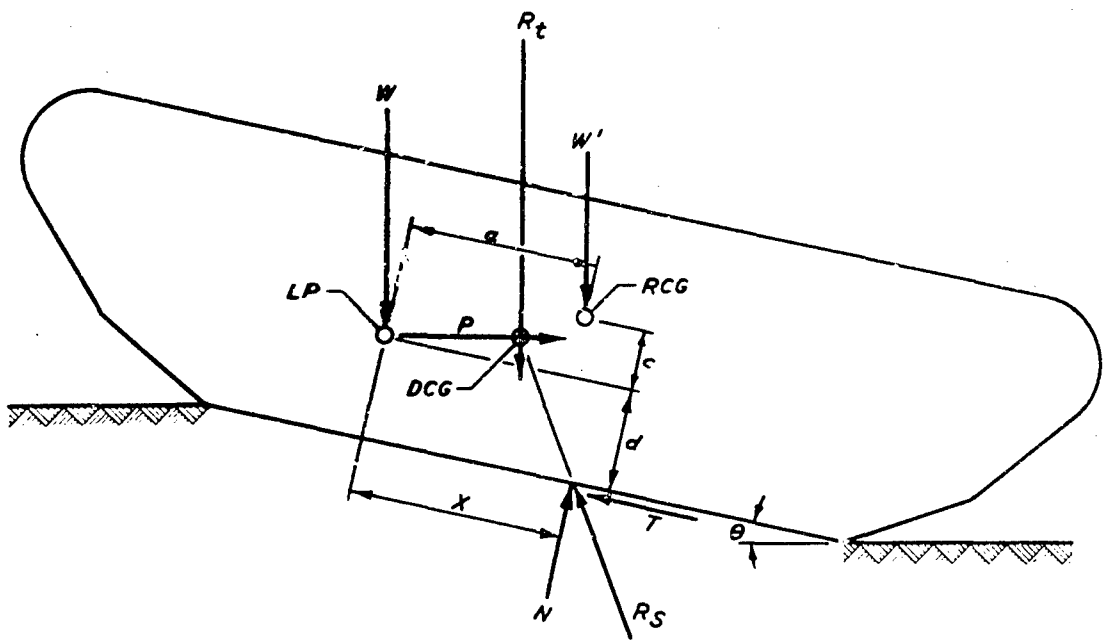

b. LARGE TRIM ANGLE θ

Fig. 16. Free-body diagram of the WES model track in soil

$$x = \frac{Td + W'a(\cos\theta) + W'c(\sin\theta)}{N} \tag{11}$$

$$T = \lambda N \quad \text{(From equation 10)}$$

so

$$x = \lambda d + \frac{W'a(\cos\theta) + W'c(\sin\theta)}{N} \tag{12}$$

$$\left.\begin{aligned} N &= \frac{W + W' - T\sin\theta}{\cos\theta} \\ N &= \frac{W + W' - \lambda N\sin\theta}{\cos\theta} \end{aligned}\right\} \text{(From equation 9)}$$

By rearranging:

$$N\cos\theta + \lambda N\sin\theta = W + W'$$

or

$$N = \frac{W + W'}{\lambda\sin\theta + \cos\theta} \tag{13}$$

Substituting equation 13 into equation 12 yields:

$$x = \lambda d + (W'a\cos\theta)\frac{(\lambda\sin\theta + \cos\theta)}{W + W'} + (W'c\sin\theta)\frac{(\lambda\sin\theta + \cos\theta)}{W + W'}$$

or

$$x = \lambda d + \frac{W'a(\lambda\sin\theta\cos\theta + \cos^2\theta) + W'c(\lambda\sin^2\theta + \sin\theta\cos\theta)}{W + W'} \tag{14}$$

61. The changes in the position of the DCG with θ can be seen by comparing figs. 16a and 16b. More important, however, is the variation of the point of application of the resultant R_s, characterized by the distance x. Equation 14 shows that x varies with θ in a complex fashion. If $\lambda = 0.5$ is assumed, the two terms in parentheses take values as follows:

θ	First Term	Second Term
0	1.000	0.000
5	1.035	0.091
10	1.055	0.186
15	1.058	0.284
20	1.043	0.379
25	1.013	0.472
30	0.966	0.558

Thus, the first term exhibits a maximum value at an intermediate value of trim angle, while the second term yields steadily increasing values in the range of conceivable trim angles.

62. Equation 14 is applicable for the WES model track. Other soil-track systems, and in particular those with a drawbar pin at the rear of the track, exhibit a different relation (fig. 17). The equilibrium equations for fig. 17 are:

$$W' - N \cos \theta - \lambda N \sin \theta = 0 \tag{15}$$

$$P + N \sin \theta - \lambda N \cos \theta = 0 \tag{16}$$

$$Ph \cos \theta + Pa \sin \theta + Nx - \lambda Nd = 0 \tag{17}$$

yielding:

$$x = \lambda d - h(\lambda \cos^2 \theta - \sin \theta \cos \theta) - a(\lambda \sin \theta \cos \theta - \sin^2 \theta) \tag{18}$$

For $\lambda = 0.5$, the two terms in parentheses take values as follows:

θ	First Term	Second Term
0	0.500	0.000
5	0.409	0.036
10	0.314	0.059
15	0.217	0.058
20	0.120	0.043
29	0.028	0.013
30	-0.058	-0.034

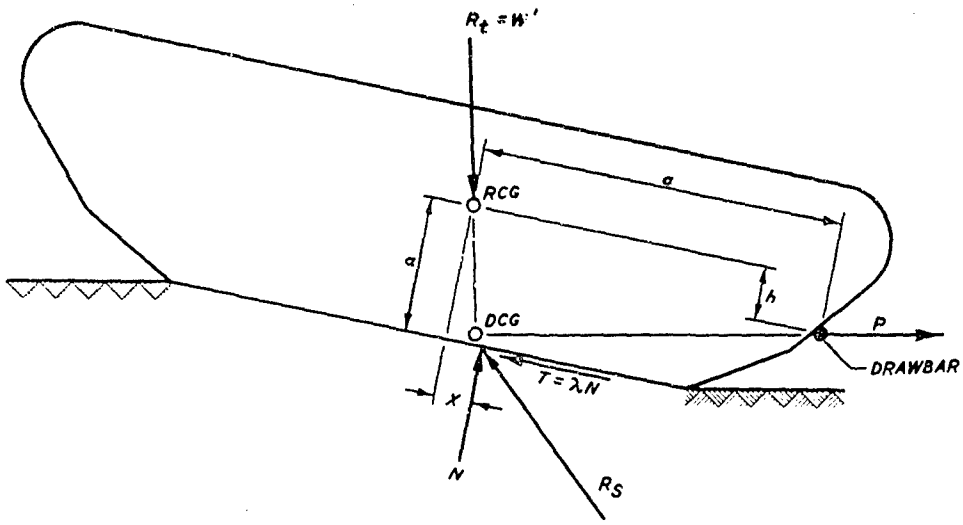

Fig. 17. Free-body diagram of soil-track system with drawbar pin at rear of track

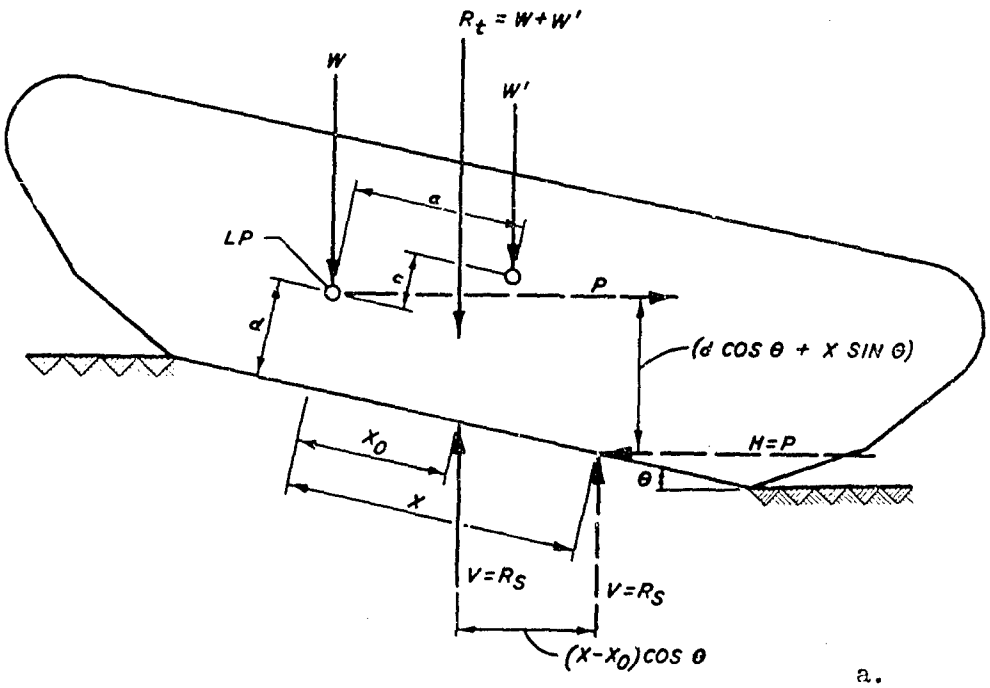

a.

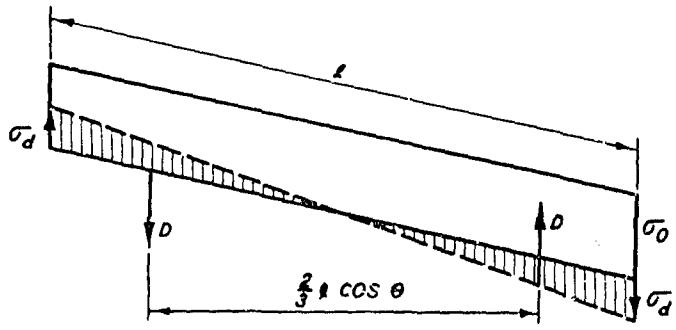

b.

Fig. 18. Dynamic pressure redistribution for track with pull measured at load axle

The relations between x and θ are quite different in the two investigated cases (i.e. the WES model track and the track with rear-mounted drawbar pin). Because of the particular construction of the WES model track, the distance x depends on the load W and weight W' (equation 14), while equation 18 does not show such dependency. More important, equations 14 and 18 (together with the tabulations in paragraphs 61 and 62, respectively) indicate that the pattern of change of x with θ is different for the two cases. (For both cases, however, the value of x is larger for positive values of θ than for $\theta = 0$, at least for positive values of a* and c in equation 14 and positive values of h and a in equation 18, and for values of θ to at least 25 deg.) Note also that the DC moves upward with increasing trim angle for the WES model track and downward for the track with rear-mounted drawbar pin.

Dynamic pressure redistribution

63. The interactions described in terms of movement of the DCG can also be examined as a function of dynamic pressure redistribution. A horizontal force acting at the drawbar of a vehicle generates a moment that tends to overturn the vehicle. This moment must be counterbalanced by an opposing moment of equal magnitude, which usually is provided by a shifting of the vertical soil reaction.** To evaluate the effects of dynamic pressure redistribution, consider the WES model track traveling with zero pull (self-propelled condition), represented in fig. 18a by the solid vector lines. The vertical soil reaction force V, composed of normal and tangential components, is equal and opposite to the resultant track load $R_t = W + W'$. The distance from load axle to V is designated x_0.

64. The corresponding situation with pull is represented by the dashed vectors. The moment generated by the vectors P and horizontal soil reaction force H is

---

* If the load axle is mounted some distance behind the RCG (yielding a negative a value in equation 14), distance x could decrease with the trim angle.

** The same phenomenon occurs also for vehicles on slopes even if no pull is developed. In this case, the weight component parallel to the slope acts as pull through the center.

$$M_p = P(d \cos \theta + x \sin \theta) \tag{19}$$

which is counterbalanced by the moment generated by a shift of the vertical resultant V

$$M_V = V(x - x_0) \cos \theta \tag{20}$$

The condition $M_p = M_V$ yields

$$x = \frac{Pd + Vx_0}{V - P \tan \theta} \tag{21}$$

The distance x has the same meaning here as previously (equation 14). In fact, equation 14 is obtained by introducing into equation 21 the relations

$$V = W + W'$$

$$x_0 = d \tan \theta + \frac{W'(a \cos \theta + c \sin \theta)^*}{(W + W') \cos \theta}$$

$$P = (W + W') \frac{\lambda \cos \theta - \sin \theta^{**}}{\cos \theta + \lambda \sin \theta}$$

65. To describe the above relations in terms of dynamic pressure redistribution, the shift of the resultant V must be expressed in terms of pressure variations. If, for simplicity, a linear pressure distribution is assumed, the countermoment can be represented by change from a uniform distribution, as expressed by two triangular pressure distributions (fig. 18b). With

b = track width

ℓ = total contact length

D = resultant force from a triangular pressure distribution

σ_d = vertical stress increase at the rear end (or decrease at the front end)

M_d = moment generated by triangular pressure distribution

---

* From moment equilibrium equation in the zero pull condition.

** From equations 7-9.

it follows that

$$D = \frac{1}{4} \ell b \sigma_d \cos \theta$$

$$M_d = D \times \frac{2}{3} \ell \cos \theta = \frac{1}{6} b \ell^2 \sigma_d \cos^2 \theta$$

The condition $M_d = M_p$ (from equation 19) yields

$$\frac{1}{6} b \ell^2 \sigma_d \cos^2 \theta = P(d \cos \theta + x \sin \theta)$$

or

$$\sigma_d = \frac{6P(d \cos \theta + x \sin \theta)}{b \ell^2 \cos^2 \theta} \tag{22}$$

Substituting from equation 21 for x :

$$\sigma_d = \frac{6PV}{b \ell^2} \left[\frac{d \cos \theta + x_0 \sin \theta}{(V - P \tan \theta) \cos^2 \theta} \right] \tag{23}$$

66. By the same approach in the second investigated case (track with rear-mounted drawbar, fig. 19), the pull-generated moment (i.e. the moment

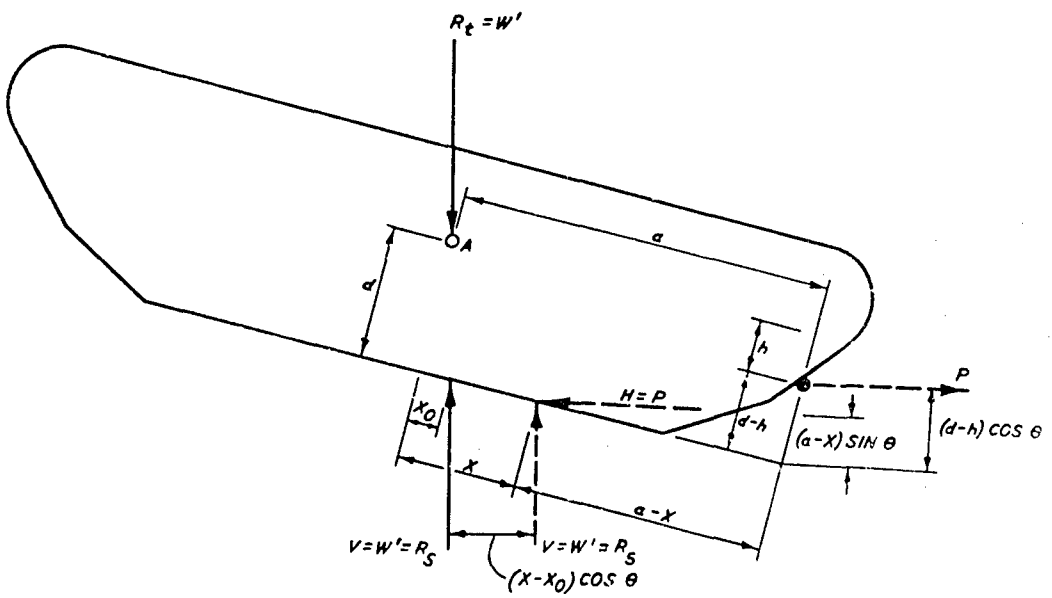

Fig. 19. Dynamic pressure redistribution for track with rear-mounted drawbar

generated about A only because P and H act) is

$$M_p = P\left[(d - h)\cos\theta - (a - x)\sin\theta\right] \tag{24}$$

and the countermoment is

$$M_v = V(x - x_0)\cos\theta \tag{25}$$

Setting $M_p = M_v$ and solving yields:

$$x = \frac{P(d - h - a\tan\theta) + Vx_0}{V - P\tan\theta} \tag{26}$$

The equation for the countermoment M_d in terms of dynamic pressure redistribution (fig. 18b) can be expressed, as before, by

$$M_d = \frac{1}{6}\, b\ell^2\sigma_d \cos^2\theta$$

For $M_p = M_d$,

$$\sigma_d = \frac{6P\left[(d - h)\cos\theta - (a - x)\sin\theta\right]}{b\ell^2\cos^2\theta} \tag{27}$$

Substituting the expression of equation 26 for x yields:

$$\sigma_d = \frac{6PV}{b\ell^2}\left[\frac{d\cos\theta + x_0\sin\theta}{(V - P\tan\theta)\cos^2\theta} - \frac{a\sin\theta + h\cos\theta}{(V - P\tan\theta)\cos^2\theta}\right] \tag{28}$$

67. Comparison of equations 23 and 28 reveals that the mechanism of dynamic pressure redistribution is different for the two track systems. Generally, the magnitude of dynamic pressure redistribution for the track with rear-mounted drawbar is less than that of the WES track, as evidenced by the negative term in equation 28 that is lacking in equation 23. In fact, for a track system with rear-mounted drawbar, a situation can be envisioned where numerators of terms within the brackets of equation 28 are equal, in which case the dynamic pressure redistribution according to equation 28 vanishes. In geometric terms, this situation is characterized by

the DCG being exactly at the soil-track interface. This condition normally cannot be simulated with the WES model track because its DCG is not allowed to vary significantly in height because of the particular construction of the track.

Concept of fixed trim angle

68. The general conclusion that must be drawn from all of the above considerations is that no single track system can be considered representative for all tracks when the complex mechanisms described above are allowed to act. One approach that eliminates the effects of dynamic pressure redistribution and the implications of unaccounted for variations of track trim angle involves mechanically fixing the trim angle at a predesignated position for each test conducted. Moments generated by the drawbar pull then are counterbalanced not by a shift of the soil reaction resultant, but by the forces and moments that hold the track in its original position. Since the dynamic pressure redistribution has been shown to be the major factor that disallows any one track to be representative of all single tracks, the elimination of this effect allows the WES track performance parameters to be applied to other tracks operating at the same trim angle.

69. In a sense, fixing the trim angle reduces the track to a representative basic running gear in that the vehiclelike characteristics of the system are eliminated. Secondly, this operation causes trim angle to be treated as an independent variable, and reduces by a considerable amount the number of geometric terms that would have to be included in applying dimensional or other types of analysis to the soil-track test results. Indeed, most of the geometric parameters used in the foregoing analysis are eliminated from consideration. A third advantage of this test mode is that it produces a wealth of information per test, since a measured amount of torque can be considered to be produced by a force at any point on, within, or even beyond the periphery of the track, as long as the product of force times distance from the point of track rotation is the same as the measured torque. Thus, the effect of having a force act at various points on or near the front of the track (e.g. by a loaded scraper blade), on the rear of the track (in towing another vehicle), or even within the track (moving the RCG by shifting the weight distribution) can be simulated by measuring

the torque needed to maintain the trim angle.

70. The primary disadvantage of testing the track at various fixed trim angles is that the resulting track performance system is applicable only to tracks operating at those angles, which themselves are not predicted. Possibly, results from tests that treat trim angle as an independent, controlled variable and the angle-maintaining force as a dependent variable will lend themselves to a means of predicting trim angle for a given situation. More likely, a separate study will be required for this purpose. Part of this separate study would necessarily involve force-distance combinations, thereby reintroducing some of the parameters eliminated in treating θ as an independent parameter.

71. Preliminary test results indicate that substantial changes in position of the RCG and in track trim angle influence track performance only slightly. Situations can easily be envisioned, however, where extreme values of track trim angle could be produced in the field, and these likely can be investigated best by using the fixed-trim-angle test mode.

Test Techniques

72. Test equipment capabilities allow the same two techniques that WES has employed in most of its testing of tires also to be used in testing tracks. The first technique, constant-slip testing, is produced when a preselected slip value is introduced and maintained mechanically; near-constant slip also results from a towed test or a constant-pull test in which the slip value, although not mechanically controlled, varies so slightly that for practical purposes it can be considered constant. The second technique, programmed-slip testing, is produced by changing the relative forward speeds of the test carriage and the track during the course of a test such that a preselected pattern of track slip in percent $\left(\frac{\text{horizontal track speed - carriage speed}}{\text{horizontal track speed}} \times 100\right)$ results. Most WES tire tests have been programmed increasing-slip tests in which slip varied linearly with time. Tests can also be conducted as programmed decreasing-slip and/or with values of slip changing in other than linear fashion. Slip values included within a single programmed-slip test can be made to vary

over practically any portion of the full (positive and negative) slip range.

73. If essentially the same results are produced at all levels of slip by constant- and programmed-slip tests, then programmed-slip tests obviously are preferred since they yield far more information per test. For tires, it has been verified both in sand and in clay that results from the two types of tests match, except possibly at very small values of positive and negative slip. This results, in part, because the tire-soil contact length is quite small for conventional tires, and tire slip has negligible influence on the change in soil strength produced by tire traffic.

74. Relative to a tire, the contact length of a track usually is quite large. To determine the effect of track slip on the strength of a coarse-grained soil, penetration resistance gradient G was measured in the test lane before traffic and at intervals of 1.5 m after one pass of the 30.5- by 121.9-cm track in several programmed-slip tests. Fig. 20 demonstrates with one curve for each test that the penetration resistance of air-dry Yuma sand changes significantly as a function of track slip. The pattern of change within the -5 to +10 percent slip range is strikingly different from the pattern outside that range. For before-traffic G_{0-15} values greater than about 2 MN/m^3, the original value of G_{0-15} is retained at a slip level of approximately +3 percent; for before-traffic G_{0-15} values less than about 2 MN/m^3, the after-first-pass G_{0-15} value tends toward 2 MN/m^3 at approximately +3 percent slip. For all cases except a combination of very dense soil and very light track load, G_{0-15} values cluster about 1.6 MN/m^3 at -5 percent slip and about 1.8 MN/m^3 at +10 percent slip. Outside the -5 to +10 percent slip range, the after-traffic values of G_{0-15} change only slightly but do appear to decrease toward a value of approximately 1.5 MN/m^3 as values of slip increase (either positively or negatively). It probably is significant that the critical void ratio of air-dry Yuma sand is attained at a value of G_{0-15} of about 1.5 MN/m^3.

75. The drastic changes in the strength of sand that often occur in the -5 to +10 percent slip range greatly complicate the interpretation of test data from programmed-slip track tests. particularly since some points of particular interest occur within that range (fig. 3). To illustrate this problem, consider the pull performance developed by the 30.5- by

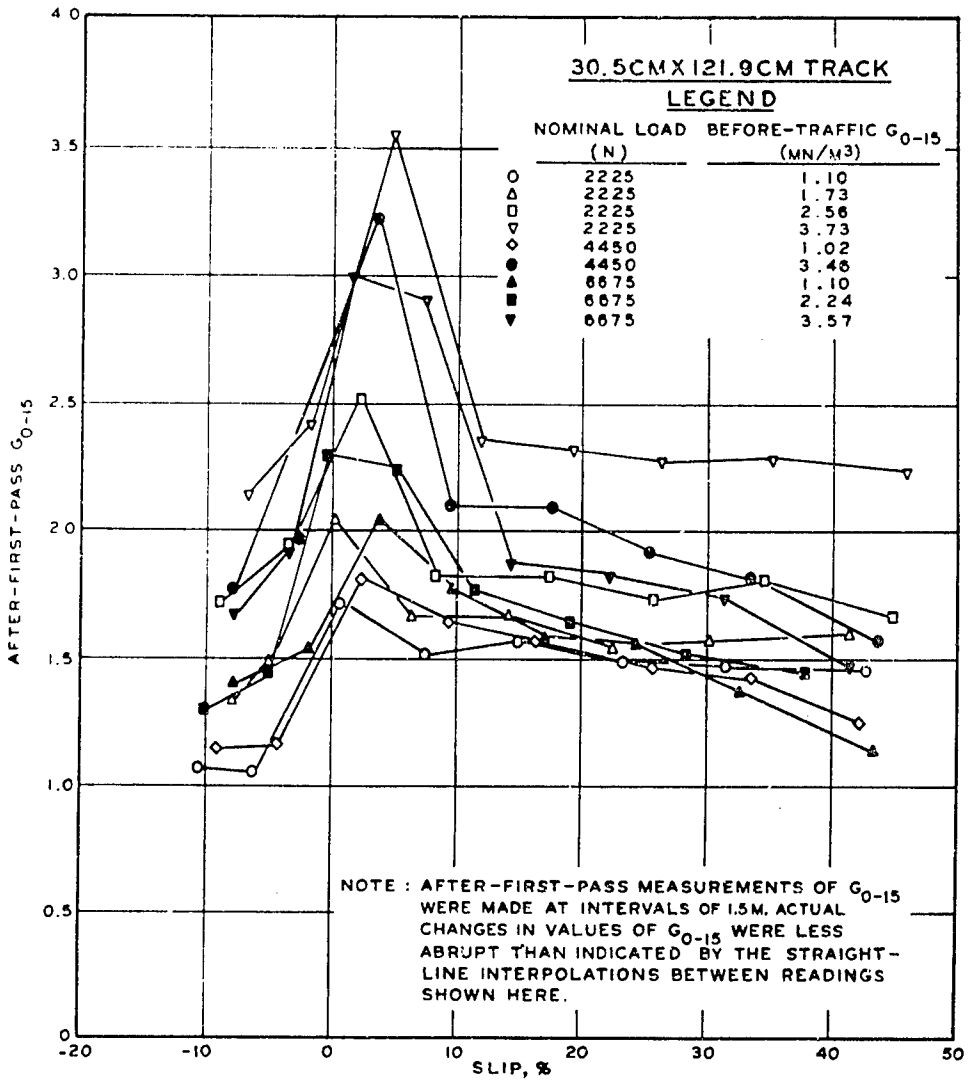

Fig. 20. Effect of track slip on sand penetration resistance

121.9-cm track in a number of programmed-slip and constant-slip tests. The relation for pull versus soil strength is presented for the towed condition for the two types of tests in fig. 21a and for the 5 percent slip condition in fig. 21b. (Towed point is defined as occurring when torque input at the drive sprocket equals zero in a programmed-slip test.) For both the towed and 5 percent slip conditions, the constant-slip tests produced changes in pull with soil strength as a function of load in an orderly, well-defined manner. The scatter of data from both groups of programmed-slip tests allows little prospect for useful analysis. Also, values of towed force are

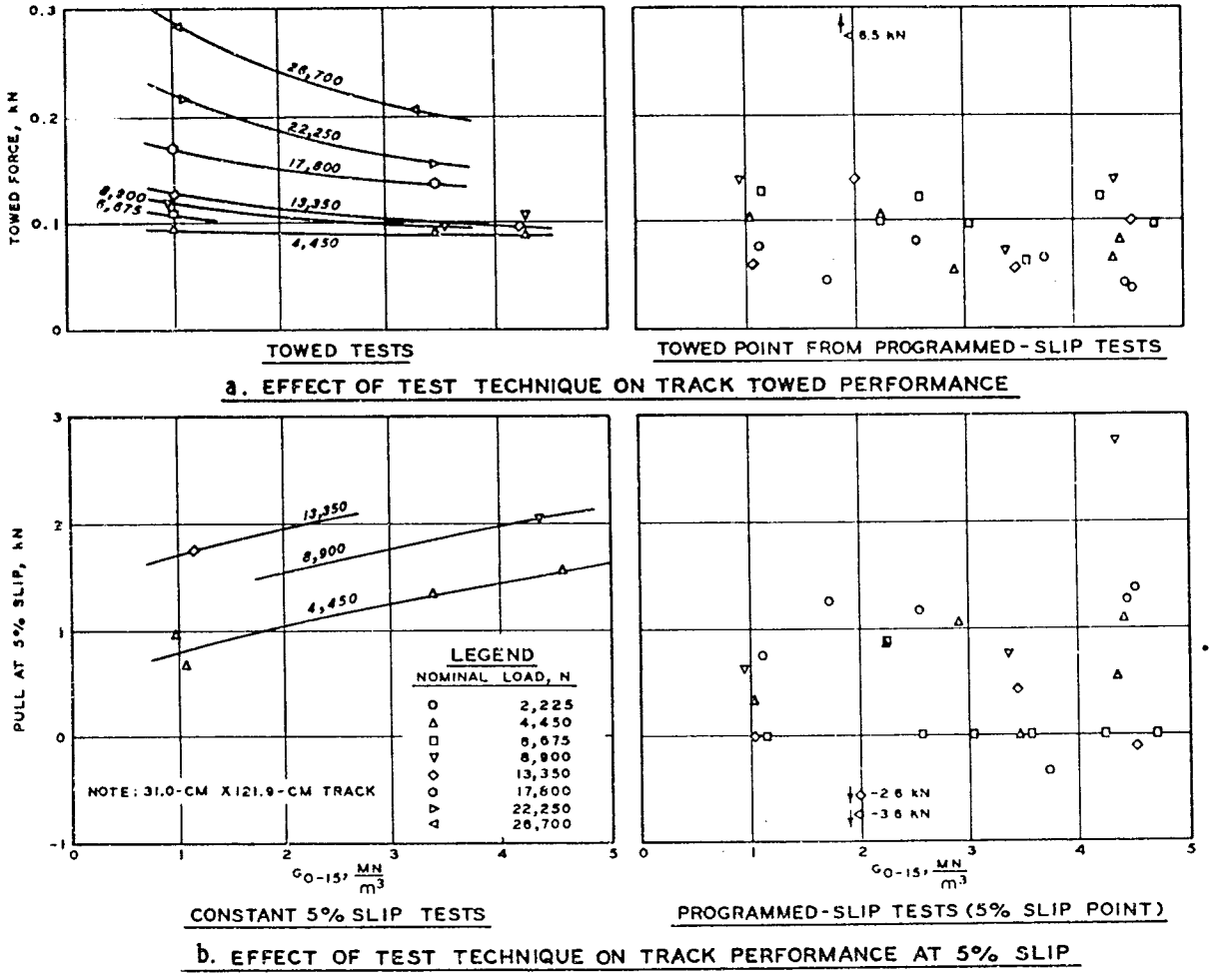

Fig. 21. Effect of test technique on track performance

generally smaller and values of pull at 5 percent slip are generally larger for the constant-slip tests than for the programmed-slip tests for corresponding conditions of load and soil strength. This results since the near-constant slips of both performance levels closely matched the slip value that produced peak after-first-pass values of G_{0-15} in the programmed-slip tests: thus, sand near maximum possible strength constantly supported the track in the towed and constant 5 percent slip tests, while sand of less than maximum strength was available, except at one particular instant, in the programmed-slip tests. Not only does in-sand, programmed-slip testing of tracks produce first-pass data quite difficult to interpret in the -5 to +10 percent range, but it also produces multiple-pass data virtually impossible to analyze because of variations of soil strength both within and between passes. Thus, programmed-slip testing of tracks in air-dry sand generally will not be used.

76. A third technique, programmed-load testing, has been used with the model track in air-dry sand in the large-scale test facility. Load is increased or decreased during the test simply by reducing or increasing, respectively, pressure within the 25-cm-diam pneumatic lift cylinders. (The lift cylinders relieve the deadweight of the test carriage that is transferred to the track load axle; see paragraph 57.) This process changes the value of load applied to the load axle at a rate of approximately 1.0 kN/m of carriage travel with the carriage moving at normal test speed. Thus, in the 30-m length normally available for testing, the total load range of the model track can be tested easily. Constant 20 percent slip, increasing-load tests produce after-first-pass G_{0-15} values that tend toward a value of about 2 (fig. 22). Differences in after-first-pass G_{0-15} values at the smallest and largest values of load are slight, however, and similar values of pull are developed in programmed-load and constant-load tests at comparable levels of load and before-traffic soil strength (fig. 23). Some attention must be given what appears to be fairly substantial data scatter for the programmed-load technique at large values of load. It is concluded, however, that useful track performance data can be produced by constant-slip, programmed-load testing.

77. No tests have been conducted with the model track in clay, but

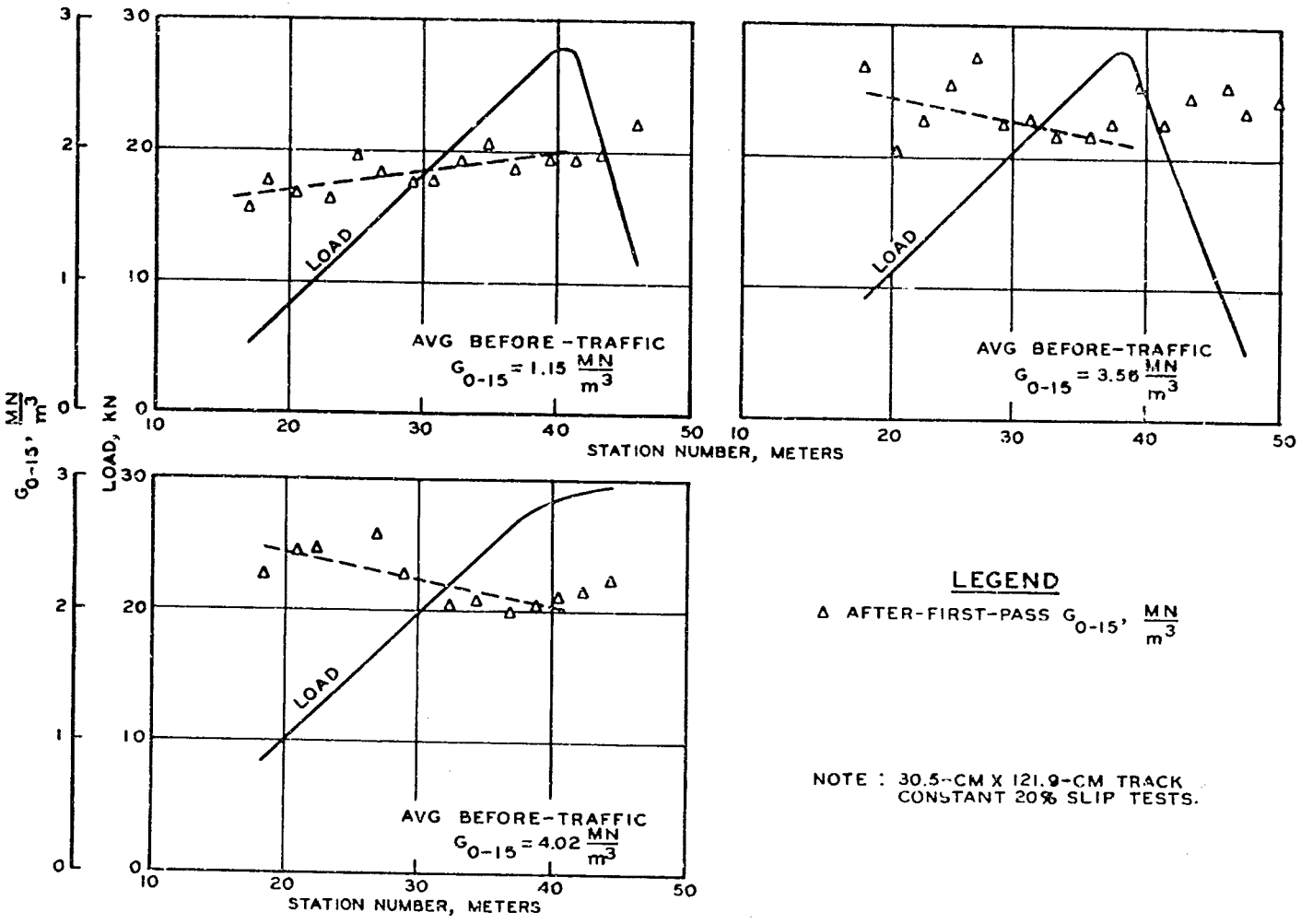

Fig. 22. Effect of the programmed-load technique on soil strength

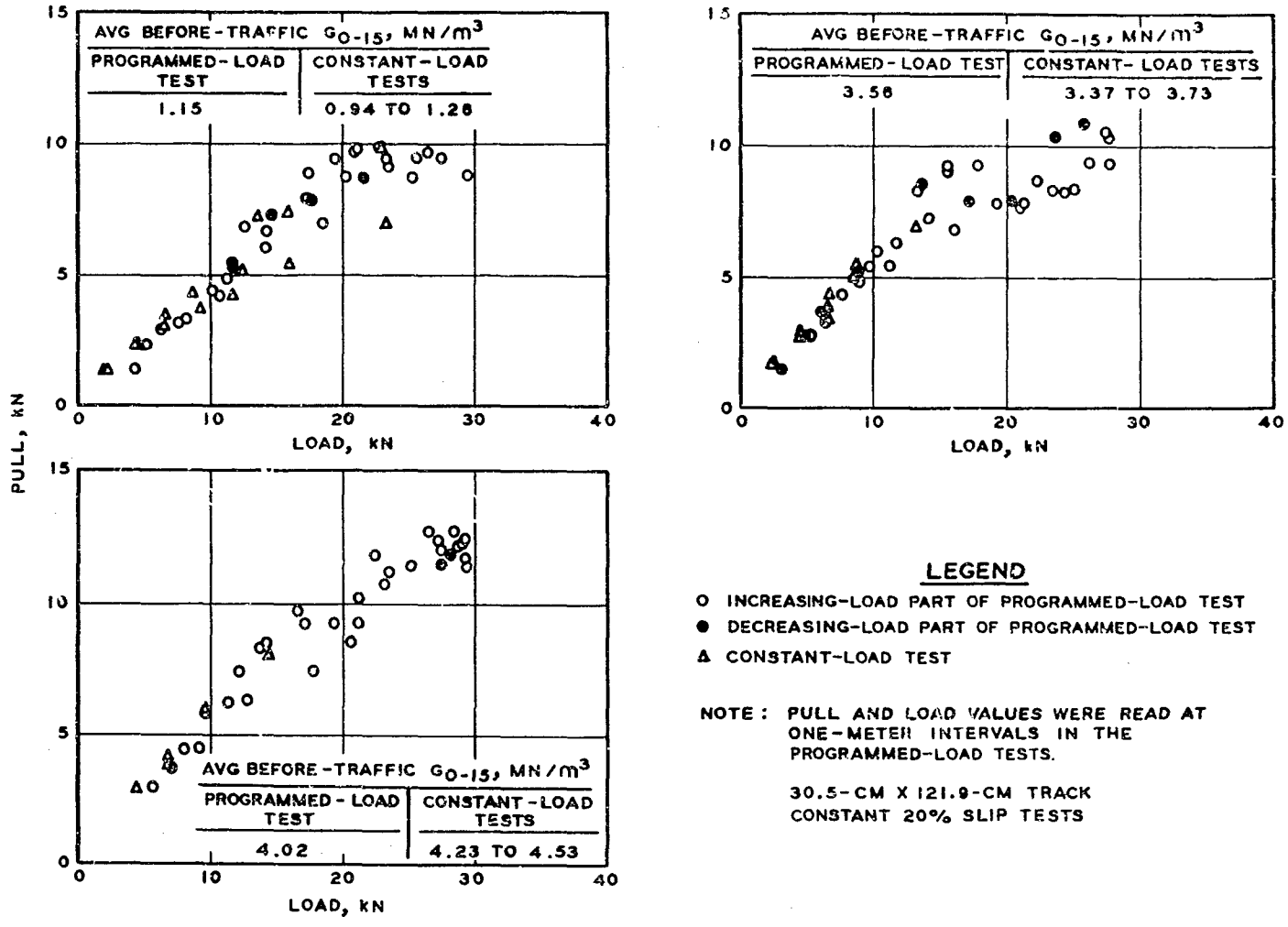

Fig. 23. Comparison of pulls obtained in constant-load and programmed-load track tests

changes in soil strength like those mentioned above are not anticipated either for programmed-slip or programmed-load testing in clay. Almost purely cohesive, fine-grained soils possess strength that is not affected by overburden. WES soil processing techniques produce homogeneous test sections that are effectively remolded. Thus, it seems likely that neither track load nor track slip will influence the support capacity of the soil. If this is the case, multiple-pass, either programmed-slip or programmed-load testing can be used for tracks in clay.

78. Each of the three test techniques mentioned above can be conducted in either of two modes. The first, and more conventional, mode involves loading the track and allowing trim angle to assume a value dictated by the interaction of forces of the soil-track system. A second mode involves mechanically restraining the trim angle at a preselected value and measuring the torque required to maintain that angle (paragraphs 68-70).

PART V: LONG-RANGE TEST PROGRAM

Basis for Program

79. To develop a comprehensive, test-proven system for describing quantitatively the performance of tracks in soils, the WES has designated the variables (paragraphs 38-48, plus track slip, load, translational velocity, and soil strength) that are considered sufficient to describe the soil-track system for straight-line operation on level, homogeneous soil. To reduce this list to manageable size and to identify the independent variables that influence soil-track performance most, about 25 tests will be conducted and their results analyzed for each type of test soil. (Appendix A outlines important features of the Plackett-Burman[23] design, which is especially suited for this purpose.) A follow-up test program will then be conducted in which values of the predominant variables will be changed systematically to allow development of a track performance prediction term (probably in nondimensional form) that will be a function of these variables. The analysis of data from these tests will be based largely on dimensional analysis because, historically, it has been successfully used in many areas of scientific research to describe a wide range of complex physical phenomena, and because the WES has successfully applied it to describe the performance of tires in soil.[24,25] Certainly, there are important differences between tires and tracks insofar as their geometries and their means of gaining propulsion through soil are concerned. However, the dimensional frameworks (in units of force-length-time) that describe the soil-tire and soil-track systems are very similar, indicating that a dimensional analysis of the soil-track system should attain the same order of success as was achieved for the soil-tire system.

80. Following this, a third phase of testing and analysis will determine the influence on track performance of each of those soil-track parameters judged not among the most important by the Plackett-Burman test program. Completion of these three phases of study should provide a comprehensive system for quantitatively predicting the straight-line, level-ground performance (drawbar pull, sinkage, trim angle, torque required) of

a track operating in a given homogeneous soil. Further analyses and tests will be needed to develop and/or evaluate theoretical descriptions of the soil-track system and subsystems and to describe the effects on track performance of vehicle speed, vehicle maneuvering (steering), obstacle traversal, slope climbing, nonuniform soil strength profiles, strength characteristics of c-ϕ soils, unusual track geometries, novel track-shoe shapes, etc.

81. Neither the amount of testing nor a comprehensive listing of all possible soil-track parameters that will be investigated by the WES can be enumerated at this time. Time, funding, and circumstances will play a large role in the final determination of these important factors. However, the following paragraphs outline, in as quantitative form as practical, the best estimate that can be made now of how the overall WES soil-track test program will be pursued.

Outline of Program

82. Tests and analyses of the soil-track systems and subsystems will be described in a series of WES technical reports under the general title "Performance of Soils Under Track Loads." Titles of particular reports that will follow this one, together with brief descriptions of the content and the required test program and method of analysis for each, are given below. The descriptions are tentative; titles, contents, and the order of reporting are all subject to change.

Report 2: Track Performance in a Desert Sand

83. The Plackett-Burman technique described in Appendix A of this report will be applied to determine the primary independent variables for tracks operating in air-dry Yuma sand. If four to five major system variables are revealed, constant-slip tests will be conducted at two to five levels for each variable, so that 100 to 150 tests likely will be required to develop a basic-parameter, one-slip-level (near maximum pull) track performance prediction term. Data tables, plots of basic soil-track relations, and a step-by-step development of the prediction term will be presented.

Report 3: Track Mobility
Number for Coarse-Grained Soils

84. Tests utilizing the fixed-trim-angle mode (paragraphs 68-70) will be used to examine the effect of an externally applied moment on track performance. Tests will be conducted in two soils, air-dry Yuma sand and mortar sand, and at several performance levels to include the towed, self-propelled, and near-maximum pull conditions. The effect on track performance of each soil-track parameter not included in the basic-parameter prediction term of Report 2 will be determined, and the prediction term modified to include functions of any additional parameters that influence track performance significantly.

Report 4: Track Performance in Fine-Grained Soils

85. It is anticipated that either programmed-slip or programmed-load testing in either the fixed-trim-angle or free-trim-angle mode can be used to test tracks in clay. The Plackett-Burman technique will be used to determine the primary independent variables of the clay-track system. Probably 100 to 150 tests (programmed-slip, constant-load) will be required to develop a basic-parameter track performance prediction term for one soil (saturated fat clay) and at all performance levels of interest; some 50 to 100 tests may be needed to validate or alter the form of the prediction term for a second fine-grained soil (probably a lean clay). Some additional testing may be needed, particularly at the start of the test program, to develop the physical techniques required to conduct multiple-pass tests with the geometrically complex track in sticky clay.

Report 5: Track Mobility
Number for Fine-Grained Soils

86. The effects of each of the variables judged not among the most important by the Plackett-Burman evaluation of Report 4 will be evaluated. Each variable likely will be tested at about three values over a range of values of the prediction term developed in Report 4. The form of the prediction term will be modified to account for the influence of any of the secondary variables found to affect track performance significantly.

Report 6: Track Performance on Layered Soil Systems

87. Base-line tests will be conducted in test sections of fat clay at one low and one high strength level for six track geometries and a broad range of track loads for each. Thereafter, test sections will be constructed first with a layer of low-strength clay overlying high-strength clay (to simulate swampy or marshy conditions or soil conditions following heavy rains), and then with the high-strength layer overlying the low-strength one (to simulate low-strength soil whose upper layer has dried and gained strength). The depth of the upper layer in each case will be increased in increments of about 3 cm in successive tests until the influence of the lower layer on track performance is eliminated. Analysis will determine how track performance is affected by the relation of (a) track geometry and test load to (b) depth to soil strength change. Analysis also will determine how soil strength measurements from layered systems can be interpreted to provide values compatible with values from homogeneous test sections.

88. Tests will be conducted in test sections of air-dry sand in which a very dense lower layer of sand supports a less dense upper layer. The upper layer will be constructed to at least three values of penetration resistance gradient. Again, depth of the upper layer will be increased in increments of about 3 cm in successive tests until the influence of the bottom layer on track performance is eliminated. A sufficient number of track geometries and test loads will be tested to determine how track geometry, test load, and changes in soil strength with depth are related, and how nonuniform soil profile strength values should be interpreted. Possibly, particularly for the tests in clay, very small scale-model tracks will be tested so that test sections of small size can be used, thereby reducing the substantial physical problems involved in constructing layered soil systems.

Report 7: Theoretical Studies

89. Report 7 will include evaluation of existing theories and perhaps development of a new theory. Checks on theories will be made by using data from the above reports and from whatever additional tests are required.

Report 8: Synopsis
of Track Performance

90. Report 8 will summarize major findings of all of the previous reports, compare the best available theoretical and empirical methods of describing soil-track systems, and propose track design criteria. Field tests will be conducted and the data evaluated to determine to what extent laboratory-developed track performance prediction terms must be modified to predict in-the-field performance. The field tests will be designed to determine the influence on track performance of weight transfer, vehicle steering, articulation of multiunit tracked vehicles, and unusual track configurations.

LITERATURE CITED

1. Nuttall, C. J., Jr., "Ground Crawling: 1966; The State-of-the-Art of Designing Off-Road Vehicles," Contract Report No. 3-162, May 1967, U. S. Army Engineer Waterways Experiment Station, CE, Vicksburg, Miss.

2. Ehrlich, I. R. et al., "Glossary of Terrain-Vehicle Terms," Journal of Terramechanics, Vol 5, No. 2, 1968, pp 53-69.

3. Green, A. J., Smith, J. L., and Murphy, N. R., "Measuring Soil Properties in Vehicle Mobility Research: Strength-Density Relations of an Air-Dry Sand," Technical Report No. 3-652, Report 1, Aug 1964, U. S. Army Engineer Waterways Experiment Station, CE, Vicksburg, Miss.

4. McRae, J. L., Powell, C. J., and Wismer, R. D., "Performance of Soils Under Tire Loads: Test Facilities and Techniques," Technical Report No. 3-666, Report 1, Jan 1965, U. S. Army Engineer Waterways Experiment Station, CE, Vicksburg, Miss.

5. Bekker, M. G., Theory of Land Locomotion, University of Michigan Press, Ann Arbor, Mich., 1956.

6. _____, Off-the-Road Locomotion, University of Michigan Press, Ann Arbor, Mich., 1960.

7. _____, Introduction to Terrain-Vehicle Systems, University of Michigan Press, Ann Arbor, Mich., 1969.

8. Terzaghi, K., Theoretical Soil Mechanics, Wiley, New York, 1944.

9. Smith, J. L., "Strength-Moisture-Density Relations of Fine-Grained Soils in Vehicle Mobility Research," Technical Report No. 3-639, Jan 1964, U. S. Army Engineer Waterways Experiment Station, CE, Vicksburg, Miss.

10. Perloff, W. H., Jr., "Tank Mobility in Soft Soils," June 1965, Systems Research Group, Department of Industrial Engineering, Ohio State University, Columbus, Ohio.

11. Perloff, W. H., Jr., and Nair, K., "A New Approach to Off-the-Road Mobility of Tracked Vehicles on Soft Soil," Sept 1963, Engineering Experiment Station, Ohio State University, Columbus, Ohio.

12. Headquarters, Department of the Army, "Soils Trafficability," Technical Bulletin ENG 37, July 1959, Washington, D. C.

13. Schreiner, B. G., "Mobility Exercise A (MEXA) Field Test Program: Performance of MEXA and Three Military Vehicles in Soft Soil," Technical Report M-70-11, Report 2, Mar 1971, U. S. Army Engineer Waterways Experiment Station, CE, Vicksburg, Miss.

14. Nicholson, D. A. and Booker, G. E., "Variations in the Performance of a Tracked Model Vehicle on Loose Sand Due to Changes in the Longitudinal Position of Its Centre of Gravity," TM 715/63, Mar 1963, Canadian Armament Research and Development Establishment, Valcartier, Quebec.

15. Reidy, F. A. and Reed, I. F., "Traction in a Submerged Sand Soil," 1956 Annual Meeting of the American Society of Agricultural Engineers, University of Georgia, Athens, Ga., 20-23 June 1956.

16. Wills, B. M. D., "The Measurement of Soil Shear Strength and Deformation Moduli and a Comparison of the Actual and Theoretical Performance of a Family of Rigid Tracks," Journal of Agricultural Engineering Research, Vol 8, No. 2, 1963, pp 119-131.

17. Freitag, D. R., Discussion of "Measurement of Soil Shear Strength and Deformation Moduli and a Comparison of the Actual and Theoretical Performance of a Family of Rigid Tracks," by B. M. D. Wills, Journal of Terramechanics, Vol 2, No. 1, 1965, pp 93-95.

18. Reece, A. R., "Problems of Soil Vehicle Mechanics," Report 8470 (LL No. 97), Mar 1964, U. S. Army Tank-Automotive Center, Land Locomotion Laboratory, Warren, Mich.

19. _____, "The Effects of Grousers on Off-the-Road Vehicle Performance," Journal of Agricultural Engineering Research, Vol 9, No. 4, 1964, pp 360-371.

20. Stewart, R. C. and Weiss, S. J., "Interim Memorandum: Angular Plates Used as Plate and Grouser Combinations in a Crawler Tractor," Technical Memorandum M-010, Dec 1950, U. S. Naval Civil Engineering Research and Evaluation Laboratory, Port Hueneme, Calif.

21. Nicholson, D. A., Booker, G. E., and Leger, E. G., "The Effect of the Number and Size of Road Wheels on the Performance of an Unsprung Tracked Model Vehicle on Loose Sand," TR 515/65, May 1965, Canadian Armament Research and Development Establishment, Valcartier, Quebec.

22. Reed, I. F., "Measurements of Forces on Track-Type Tractor Shoes," American Society of Agricultural Engineers, Transactions, Vol 1, No. 1, 1958, pp 15-18.

23. Plackett, R. L. and Burman, J. P., "The Design of Optimum Multifactorial Experiments," Biometrika, Vol 33, 1946, pp 305-325.

24. Freitag, D. R., "A Dimensional Analysis of the Performance of Pneumatic Tires on Soft Soils," Technical Report No. 3-688, Aug 1965, U. S. Army Engineer Waterways Experiment Station, CE, Vicksburg, Miss.

25. Green, A. J., "Performance of Soils Under Tire Loads; Development and Evaluation of Mobility Numbers for Coarse-Grained Soils," Technical Report No. 3-666, Report 5, July 1967, U. S. Army Engineer Waterways Experiment Station, CE, Vicksburg, Miss.

26. Daniel, D., "Use of Half-Normal Plots in Interpreting Factorial Two-Level Experiments," Technometrics, Vol 1, No. 4, Nov 1959, pp 311-341.

27. Williams, K. R., "Comparing Screening Designs," Industrial and Engineering Chemistry, Vol 5, No. 6, June 1963, pp 29-32.

APPENDIX A: IDENTIFICATION OF PRIMARY SYSTEM VARIABLES FROM A PLACKETT-BURMAN TEST DESIGN

1. A statistical design of experiments by the Plackett-Burman method is based on balanced incomplete blocks and is aimed at identifying the most important variables in a system as candidates for further, more detailed study. The design accomplishes this objective with a minimum amount of testing and is especially useful in the study of practically any system being examined for the first time. References 23, 26, and 27 (see Literature Cited at the end of the main text) explain in detail the theoretical bases upon which this design is built; this appendix will describe only the mechanics of applying the design.

2. First, the experimenter lists all possible variables in his test system that have even a remote chance of significantly influencing the test results and that can be closely controlled. Each variable is assigned one practical high-level value and one practical low-level value at which it will be tested. The experimenter next chooses a design of size N, where N usually is taken as the number of tests or number of rows in a Plackett-Burman matrix that is just one larger than the number of controlled variables. A matrix of 16 rows designed to study the effects of 15 controlled variables (A-O) in 16 tests is shown in fig. A1. The + and - signs signify the upper- and lower-level values at which the system variables are tested. It is possible, then, in N tests to determine the relative importance of as many as $N - 1$ variables. Furthermore, it is possible to determine the significance of these $N - 1$ variables on as many test responses as the experimenter cares to measure; i.e. in each test the experimenter can measure as many test responses as he pleases for each test conducted. Treating each type of test response individually, he can then determine the relative importance of each of the controlled variables on that type of response.

3. The heart of a Plackett-Burman design is a matrix like that shown in fig. A1. Each column in the matrix corresponds to a variable of the test system, and each row represents the levels of the variables associated with one test. The sign is consistent along any diagonal from right to left beginning at any location along either the top row or the far

− = LOW LEVEL
+ = HIGH LEVEL

RUN NO., N	RANDOM ORDER	VARIABLE A	B	C	D	E	F	(G)	H	I	J	K	L	M	(N)	(O)
1	1	+	⊕	+	+	−	+	−	+	+	−	−	+	−	−	−
2	4	+	⊕	+	−	+	−	+	+	−	−	+	−	−	−	+
3	7	+	⊕	−	+	−	+	+	−	−	+	−	−	−	+	+
4	5	+	⊖	+	−	+	+	−	−	+	−	−	−	+	+	+
5	16	−	+	−	+	+	−	−	+	−	−	−	+	+	+	+
6	10	+	⊖	+	+	−	−	+	−	−	−	+	+	+	+	−
7	12	−	+	+	−	−	+	−	−	−	+	+	+	+	−	+
8	15	+	⊕	−	−	+	−	−	−	+	+	+	+	−	+	−
9	6	+	⊖	−	+	−	−	−	+	+	+	+	−	+	−	+
10	3	−	−	+	−	−	−	+	+	+	+	−	+	−	+	+
11	2	−	+	−	−	−	+	+	+	+	−	+	−	+	+	−
12	13	+	⊖	−	−	+	+	+	+	−	+	−	+	+	−	−
13	11	−	−	−	+	+	+	+	−	+	−	+	+	−	−	+
14	9	−	−	+	+	+	+	−	+	−	+	+	−	−	+	−
15	14	−	+	+	+	+	−	+	−	+	+	−	−	+	−	−
16	8	−	−	−	−	−	−	−	−	−	−	−	−	−	−	−

PLACKETT-BURMAN MATRIX FOR DETERMINING THE EFFECTS OF 15 VARIABLES AT TWO LEVELS USING 16 RUNS.

N = 8	+ + + − + − −
N = 12	+ + − + + + − − − + −
N = 16	+ + + + − + − + + − − + − − −
N = 20	+ + − − + + + + − + − + − − − − + + −
N = 24	+ + + + + − + − + + − − + + − − + − + − − − −
N = 28	+ − + + + + − − − − + − − − + − − + + + − + − + + − +
N = 32	− − − − + − + − + + + − + + − − − + + + + + − − + + − + − − +

FIRST ROW OF PLACKETT-BURMAN MATRIX FOR SEVERAL VALUES OF N

Fig. A1. Some Plackett-Burman matrices

right-hand column, except that the last row has all minus signs. Plackett-Burman matrices for all other values of N have these same characteristics. Therefore, any Plackett-Burman matrix is defined when only its first row is known. The first rows of matrices for several values of N are shown at the bottom of fig. A1.

4. The effect of a parameter on a given response is defined as the difference between the average value of the response for all tests at the high level and the average value of the response for all tests at the low level, e.g. for $N = 16$

$$\text{Effect of } A = E_A = \frac{\Sigma \text{ responses at } (+)}{8} - \frac{\Sigma \text{ responses at } (-)}{8} \qquad \text{(A1)}$$

To see why this simple formulation works, refer to fig. A1. When variable A is at its high level, variable B is high four times and low four times (note the circled entries). Likewise, when A is at its low level, B is high in four tests and low in the other four. Thus, the net effect of changing variable B cancels in calculating the effect of A. The remaining variables balance in this same way, so that the net difference is only the effect of A. Despite the simplicity of equation A1, the results obtained through its use are equivalent to those obtainable by a complete multiple regression.

5. Not all of the 15 columns shown in fig. A1 represent real experimental variables; G, N, and O are dummy variables. Thus, although a column of +'s and -'s is listed under each of G, N, and O, no changes in test conditions are made corresponding to these signs; that is, when the actual test program is conducted, the + and - signs under columns for the dummy variables are regarded as not being there at all; however, their effects are calculated in the same way as the effects of the real variables. The effect of a dummy variable is zero if (a) there are no interactions of the real variables, and (b) there is no error in producing the conditions described by the Plackett-Burman matrix and in recording the test response. If the effect of the dummy variable is not zero (and in the real world it will not be), then the magnitude of the effect is taken as an estimate of experimental error. To be more specific, the magnitudes of the

dummy variables are used to estimate the variance of each of the test variables in the following manner:

$$V_{eff} = \frac{\Sigma(E_d)^2}{n} \tag{A2}$$

where

V_{eff} = estimate of the variance of the effect of each real test variable

E_d = effect of a dummy variable

n = number of dummy variables

For example, an estimate of the variances of A in fig. A1 is

$$V_A = \frac{\text{Sum of squares of the effects of the dummy variables}}{\text{Number of dummy variables}}$$

$$V_A = \frac{E^2_{(G)} + E^2_{(N)} + E^2_{(O)}}{3}$$

The standard error of each test variable is defined as the square root of its variance, or

$$S.E._{eff} = \sqrt{V_{eff}} \tag{A3}$$

The significance of the effect of each test variable can then be determined through use of its t-statistic, defined as

$$t = \frac{\text{effect}}{S.E._{eff}}$$

The value of t, together with the number of degrees of freedom for the distribution of the response (i.e. the number of dummy variables), is then compared with values in a table like that of fig. A2.

6. Several important features of the Plackett-Burman design are illustrated best by example. Data that resulted from application of the matrix of fig. A1 are presented in fig. A3. Units of the variables are not listed, but levels in columns 2 and 3 might be 2 kN and 10 kN, 0.5 m/sec

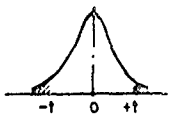

DEGREE OF FREEDOM	*P = 0.9	0.8	0.7	0.6	0.5	0.4	0.3	0.2	0.1	0.05	0.02	0.01
1	0.158	0.325	0.510	0.727	1.000	1.376	1.963	3.078	6.314	12.706	31.821	63.657
2	0.142	0.289	0.445	0.617	0.816	1.061	1.386	1.886	2.920	4.303	6.965	9.925
3	0.137	0.277	0.424	0.584	0.765	0.978	1.250	1.638	2.353	3.182	4.541	5.841
4	0.134	0.271	0.414	0.569	0.741	0.941	1.190	1.533	2.132	2.776	3.747	4.604
5	0.132	0.267	0.408	0.559	0.727	0.920	1.156	1.476	2.015	2.571	3.365	4.032
6	0.131	0.265	0.404	0.553	0.718	0.906	1.134	1.440	1.943	2.447	3.143	3.707
7	0.130	0.263	0.402	0.549	0.711	0.896	1.119	1.415	1.895	2.365	2.998	3.499
8	0.130	0.262	0.399	0.546	0.706	0.889	1.108	1.397	1.860	2.306	2.896	3.355
9	0.129	0.261	0.398	0.543	0.703	0.883	1.100	1.383	1.833	2.262	2.821	3.250
10	0.129	0.260	0.397	0.542	0.700	0.879	1.093	1.372	1.812	2.228	2.764	3.169
11	0.129	0.260	0.396	0.540	0.697	0.876	1.088	1.363	1.796	2.201	2.718	3.106
12	0.128	0.259	0.395	0.539	0.695	0.873	1.083	1.356	1.782	2.179	2.681	3.055
13	0.128	0.259	0.394	0.538	0.694	0.870	1.079	1.350	1.771	2.160	2.650	3.012
14	0.128	0.258	0.393	0.537	0.692	0.868	1.076	1.345	1.761	2.145	2.624	2.977
15	0.128	0.258	0.393	0.536	0.691	0.866	1.074	1.341	1.753	2.131	2.602	2.947
16	0.128	0.258	0.392	0.535	0.690	0.865	1.071	1.337	1.746	2.120	2.583	2.921
17	0.128	0.257	0.392	0.534	0.689	0.863	1.069	1.333	1.740	2.110	2.567	2.898
18	0.127	0.257	0.392	0.534	0.688	0.862	1.067	1.330	1.734	2.101	2.552	2.878
19	0.127	0.257	0.391	0.533	0.688	0.861	1.066	1.328	1.729	2.093	2.539	2.861
20	0.127	0.257	0.391	0.533	0.687	0.860	1.064	1.325	1.725	2.086	2.528	2.845
21	0.127	0.257	0.391	0.532	0.686	0.859	1.063	1.323	1.721	2.080	2.518	2.831
22	0.127	0.256	0.390	0.532	0.686	0.858	1.061	1.321	1.717	2.074	2.508	2.819
23	0.127	0.256	0.390	0.532	0.685	0.858	1.060	1.319	1.714	2.069	2.500	2.807
24	0.127	0.256	0.390	0.531	0.685	0.857	1.059	1.318	1.711	2.064	2.492	2.797
25	0.127	0.256	0.390	0.531	0.684	0.856	1.058	1.316	1.708	2.060	2.485	2.787
26	0.127	0.256	0.390	0.531	0.684	0.856	1.058	1.315	1.706	2.056	2.479	2.779
27	0.127	0.256	0.389	0.531	0.684	0.855	1.057	1.314	1.703	2.052	2.473	2.771
28	0.127	0.256	0.389	0.530	0.683	0.855	1.056	1.313	1.701	2.048	2.467	2.763
29	0.127	0.256	0.389	0.530	0.683	0.854	1.055	1.311	1.699	2.045	2.462	2.756
30	0.127	0.256	0.389	0.530	0.683	0.854	1.055	1.310	1.697	2.042	2.457	2.750
∞	0.12566	0.25335	0.38532	0.52440	0.67449	0.84162	1.03643	1.28155	1.64485	1.95996	2.32634	2.57582

* P IS THE PROBABILITY OF HAVING t THIS LARGE OR LARGER IN SIZE BY CHANCE.

Fig. A2. Table for t-test of significance between two sample means

VARIABLE NAME	LEVELS LOW (−)	LEVELS HIGH (+)	EFFECT, (−) TO (+)	RELATIVE SIGNIFICANCE, t TEST	
A	2	10	−19.4	8.43	99%
B	0.5	2	5.3	2.29	80%
C	15	60	6.6	2.85	90%
D	5	20	2.6	1.14	70%
E	2	3	0.5	0.19	—
F	1	2	1.2	0.52	—
(G)	—	—	0.116	—	—
H	1	5	2.3	0.99	—
I	0	20	0.3	0.12	—
J	1	4	−7.8	3.37	95%
K	0	5	1.5	0.66	—
L	3	12	2.2	0.95	—
M	2	8	−1.5	0.66	—
(N)	—	—	3.974	1.72	80%
(O)	—	—	0.354	—	—

Fig. A3. Variables and their significance

and 2.0 m/sec, 15 cm and 50 cm, etc., if variables A , B , and C were test load, velocity, and width, for example. For variable A , the t value is computed as $t_A = -19.4 \div \frac{\sqrt{(0.116)^2 + (3.974)^2 + (0.354)^2}}{3} = -8.43$. [The sign of the effect is important (e.g. changing the level of variable A from its low to its high level caused the effect of the measured response to decrease by 19.4 units), but the sign of the value of t can be ignored (i.e. all t values are considered positive in using the table of fig. A2)]. Entering the table of fig. A2 on line 3 (since there are three dummy variables, or degrees of freedom), it is seen that 8.43 is larger than 5.84, which is the smallest t value required for P = 0.01 when df = 3 . Thus, it is concluded that the effect of A is real (i.e. that it is not caused by chance) with (100 - 1) = 99 percent confidence. The relative significance of the other variables is determined in the same manner. Generally, the t test must produce a confidence level of at least 70 percent to indicate that more careful study of a variable is justified.

7. It is important to recognize the influence of the number of the degrees of freedom on the t test. Note from the last column in fig. A2 that the values of t drop drastically as the number of degrees of freedom increase from one to three and then continue to drop much more slowly thereafter. This same trend is seen for all other columns, i.e. all other values of P , in the table. This indicates that the prospect of obtaining a t value large enough to indicate significance at a given confidence level is greatly improved if at least three degrees of freedom are present in the test program. In other words, the t test of significance is much more sensitive if at least three dummy variables are included in the test system. This requirement changes the meaning of a statement made in paragraph 2. Using a Plackett-Burman matrix test design, it is possible in N test runs to determine the importance of N - 1 total variables; however, only about N - 4 of these should be real variables.

8. Like any other method of designing test programs, the Plackett-Burman technique has its limitations, mainly two: Firstly, the high and low levels of the test variables must be selected such that the test conditions defined by each and every row in the design matrix can be satisfied.

The physical requirements for satisfying all of these combinations may limit the range of some of the variables to the point where, for all practical purposes, they are eliminated from consideration. This follows from the fact that the t value for the test of relative significance of each variable is influenced by the magnitude of the high and low levels at which that variable was tested.

9. Secondly, the Plackett-Burman design is highly fractionated and confounding exists among the variables. The main effects, i.e. the effect of each of the individual variables, are not confounded with each other, but because of the high fractionation, each main effect is confounded with large numbers of two-factor, three-factor, and higher order interactions. This means that it is not possible to identify the effects that result when each single variable interacts with other combinations of two or more variables. Fig. A4 shows the confounding of the main effects with all two-factor interactions for the matrix of fig. A1. (Tables like that in fig. A4 can be constructed only for a Plackett-Burman matrix whose value of N

VARIABLE							
A	BM	CJ	DE	FK	GI	HN	LO
B	AM	CN	DK	EF	GL	HJ	IO
C	AJ	BN	DO	EL	FG	HM	IK
D	AE	BK	CO	FM	GH	IN	JL
E	AD	BF	CL	GN	HI	JO	KM
F	AK	BE	CG	DM	HO	IJ	LN
(G)	AI	BL	CF	DH	EN	JK	MO
H	AN	BJ	CM	DG	EI	FO	KL
I	AG	BO	CK	DN	EH	FJ	LM
J	AC	BH	DL	EO	FI	GK	MN
K	AF	BD	CI	EM	GJ	HL	NO
L	AO	BG	CE	DJ	FN	HK	IM
M	AB	CH	DF	EK	GO	IL	JN
(N)	AH	BC	DI	EG	FL	JM	KO
(O)	AL	BI	CD	EJ	FH	GM	KN

Fig. A4. Primary and two-factor effect confounding

is an integral power of 2.) Generally, but not always, interactions of higher than second order are not significant. From fig. A3, dummy variable (H) has a large t value, 1.72, which indicates that its effect is

significant at the 80 percent confidence level. Quite likely, this is the result of an interaction of variables B and C . BC is one of the two-factor interactions with which (N) is confounded, and the effects of both B and C were found to be significant. This conclusion appears logical, but there is no way to verify suspicions of this sort without further experimental work.

10. In summary, the Plackett-Burman method of designing test programs can be used with a very limited amount of testing to identify the important variables in a test system. In the example described by figs. A1-A3, the importance of 15 total and 12 real variables was examined in a program of only 16 tests. Of these 12, only 4 or possibly 5 were found to significantly affect the test response. If care and good judgment are exercised at all stages, the Plackett-Burman technique can be an extremely useful tool in defining the size and predominant variables of an experimental system.

APPENDIX B: WES MOBILITY INDEX FORMULAS FOR TRACKED VEHICLES

1. The following two formulas were developed by WES to describe in-the-field tracked vehicle performance for the towed and self-propelled conditions.

Towed tracked vehicles

$$\text{Mobility index} = \left(\frac{\text{contact pressure factor} \times \text{weight factor}}{\text{track factor}}\right) + \text{bogie factor} - \text{clearance} + 30$$

wherein

$$\text{Contact pressure factor} = \frac{\text{gross weight in lb}}{\text{area of tracks in contact with ground in sq in.}}$$

Weight factor $\geq 15{,}000$ lb = 1.0
$< 15{,}000$ lb = 0.8

$$\text{Track factor} = \frac{\text{track width in in.}}{100}$$

$$\text{Bogie factor} = \frac{\text{gross weight in lb divided by 10}}{(\text{total no. of bogies on track in contact with ground}) \times (\text{area of 1 track shoe in sq in.})}$$

Clearance = clearance in in.

Self-propelled tracked vehicles

$$\text{Mobility index} = \left(\frac{\text{contact pressure factor} \times \text{weight factor}}{\text{track factor} \times \text{grouser factor}} + \text{bogie factor} - \text{clearance factor}\right) \times \text{engine factor} \times \text{transmission factor}$$

wherein

$$\text{Contact pressure factor} = \frac{\text{gross weight in lb}}{\text{area of tracks in contact with ground in sq in.}}$$

Weight factor	<50,000 lb	= 1.0
	50,000 to 69,999 lb	= 1.2
	70,000 to 99,999 lb	= 1.4
	≥100,000 lb	= 1.8

$$\text{Track factor} = \frac{\text{track width in in.}}{100}$$

Grouser factor	grousers ≤1.5 in. high	= 1.0
	grousers >1.5 in. high	= 1.1

$$\text{Bogie factor} = \frac{\text{gross weight in lb divided by 10}}{\text{(total no. of bogies on tracks in contact with ground)} \times \text{(area of 1 track shoe in sq in.)}}$$

$$\text{Clearance factor} = \frac{\text{clearance in in.}}{10}$$

Engine factor	≥10 hp/ton of vehicle wt	= 1.0
	<10 hp/ton of vehicle wt	= 1.05

Transmission factor	hydraulic	= 1.0
	mechanical	= 1.05