[illegible]

[illegible]

[illegible]

[illegible]

ANNUAL REPORT NO. 1

Period Covered: 1 July 1970 - 30 June 1971

ARPA Order No. - 1611

Program Code No. - C 10

Name of Contractor - M.I.T.

Effective Date of Contract - 1 July 1970

Contract Expiration Date - 30 June 1972

Amount of Contract - $110,000.

Contract No. - F44620-70-C-0103

Principal Investigator - Keiiti Aki, 617/864-6900 ext. 6397

Program Manager - Paul Reasenberg, 617/864-6900 ext. 6389

Short Title of Work - Seismic Source Mechanisms

Sponsored by

Advanced Research Projects Agency

ARPA Order No. 1611

NATIONAL TECHNICAL
INFORMATION SERVICE

DDC
RECEIVED
AUG 18 1971
A

65

DISCLAIMER NOTICE

THIS DOCUMENT IS THE BEST QUALITY AVAILABLE.

COPY FURNISHED CONTAINED A SIGNIFICANT NUMBER OF PAGES WHICH DO NOT REPRODUCE LEGIBLY.

DOCUMENT CONTROL DATA - R&D

(Security classification of title, body of abstract and indexing annotation must be entered when the overall report is classified)

Massachusetts Institute of Technology
Department of Earth and Planetary Sciences
Cambridge, Massachusetts 02139

UNCLASSIFIED

2b. GROUP

SEISMIC SOURCE MECHANISMS

Scientific Interim

Keiiti Aki
Paul A. Reasenberg

30 July 1971

65

F44620-70-C-0103

Annual Report No. 1

AO 1611-3

62701D

Approved for public release; distribution unlimited.

TECH, OTHER

AFOSR (NPG)
1400 Wilson Boulevard
Arlington, Virginia 22209

The purpose of this project is to develop an instrument system capable of measuring and recording the seismic spectrum at short distances from a large underground explosion. A problem of geologic hazard of considerable interest exists concerning the interaction of explosion-generated shock waves with tectonic stress in the neighborhood of the explosion site. A wide-band measurement of the seismic spectrum at short distances and at various azimuths about the explosion will supply crucial information about the processes in the focal region

The instrument system developed during the period covered by this report is capable of measuring and recording the seismic motions at three locations, separated by up to ten miles. Signal processing, telemetering, and recording are performed by the system. A detailed description of the system and its operation is given.

DD FORM 1 NOV 65 1473

UNCLASSIFIED

Security Classification

DEPARTMENT OF EARTH AND PLANETARY SCIENCES
MASSACHUSETTS INSTITUTE OF TECHNOLOGY
Cambridge, Massachusetts 02139

SEISMIC SOURCE MECHANISMS

ANNUAL REPORT NO. 1

Period Covered: 1 July 1970 - 30 June 1971

ARPA Order No. - 1611

Program Code No. - 0F10

Name of Contractor - M.I.T.

Effective Date of Contract - 1 July 1970

Contract Expiration Date - 30 June 1972

Amount of Contract - $110,000.

Contract No. - F44620-70-C-0103

Principal Investigator - Keiiti Aki, 617/864-6900 ext. 6397

Program Manager - Paul Reasenberg, 617/864-6900 ext. 6389

Short Title of Work - Seismic Source Mechanisms

Sponsored by

Advanced Research Projects Agency

ARPA Order No. 1611

DDC
RECEIVED
AUG 18 1971
A

Summary

The purpose of this project is to develop an instrument system capable of measuring and recording the seismic spectrum at short distances from a large underground explosion. A problem of geologic hazard of considerable interest exists concerning the interaction of explosion-generated shock waves with tectonic stress in the neighborhood of the explosion site. A wide-band measurement of the seismic spectrum at short distance and at various azimuths about the explosion will supply crucial information about the processes in the focal region.

The instrument system developed during the period covered by this report is capable of measuring and recording the seismic motions at three locations, separated by up to ten miles. Signal processing, telemetering, and recording are performed by the system. A detailed description of the system and its operation is given.

Table of Contents

Summary..... 1

List of Figures..... 4

List of Tables..... 5

Section I - Equipment Description..... 6

A. General Description..... 6
B. Mechanical Description..... 8
C. System Description..... 8

1. Accelerometers..... 8
2. Internal Calibrator,..... 9
3. A-Filter..... 9
4. B-Filter.....10
5. Voltage Controlled Oscillators.....10
6. Transmitters and Receivers.....11
7. Antennas.....11
8. Recording and Discriminating Unit.....12
a. Recording.....12
b. Discriminating.....12
9. 1/2-Second Time Mark Generator.....13
10. WWV Receiver.....14
11. Tape Unit.....14
12. Data Station Front Panels.....14
13. Power Supplies.....16

Section II - Initial Operating Procedures.....18

A. Data Stations.....18
B. Recording and Discriminating Unit.....19
C. Tape Unit.....20

Section III - Principles of Operation.....21

A. Signal-to-noise Ratio.....21
1. Amplitude Noise.....21
2. Frequency Modulation Noise.....22
B. Harmonic Distortion.....25
C. Adjacent Channel Crosstalk.....26

Section IV - Schematics and Diagrams.....40
Section V - Tables.....51
Appendix I - Adjusting the Ampex FR-1300 Tape Recorder.....52
Appendix II - Cable Wiring.....55
Appendix III - Procedure for Setting VCO and Mixer Levels.61
Appendix IV - R.F. Power Computation.....63

Section IV - Schematics and Diagrams.....29

Section V - Tables.....41

Appendix I - Adjusting the Ampex FR-1300 Tape Recorder.....52

Appendix II - Cable Wiring.....55

Appendix III - Procedure for Setting VCO and Mixer Levels.61

Appendix IV - R.F. Power Computation.....63

Section 1

Equipment Description

A. General Description

The purpose of the O.I.T. Seismic Telemetry System is to provide wide-band azimuthal coverage in the near-field of a seismic event. Simultaneous detection and recording of ground motion at three points is now possible, and a fourth station will be added during the next year. The system is composed of three stations. Each of two Remote Data Stations detect three orthogonal components of ground motion, perform signal processing on them and telemeter the data by FM radio to a Local Data Station. The Local Data Station detects three components of ground motion as well, and similarly performs signal processing. However, instead of transmitting its data, the Local Data Station receives the radio signals from the two Remote Data Stations, and acts as a meeting place for the three sets of data.

In each data station, the ground motion sensors are force balanced accelerometers. The signals from these three orthogonal sensors are directly proportional to ground acceleration. Two types of signal processsing are done in each data station. One active filter for each component performs a double integration and amplifies the signal to give an output proportional to ground displacement. The other active filter is a band pass filter, whose output is proportional to ground acceleration. Hence, six data signals originate from

List of Figures

Figure

1. Local Data Station.....43
2. Remote Data Station.....46
3. Local Data Station Front Panel.....47
4. Remote Data Station Front Panel.....48
5. Local Station Setup.....49
6. Remote Station Setup.....50
7. Recording and Discriminating Unit.....51

[illegible]

[illegible]

1. [illegible] ..... [illegible]
2. [illegible] ..... [illegible]
3. [illegible] ..... [illegible]
4. [illegible] ..... [illegible]

Section I

Equipment Description

A. General Description

The purpose of the M.I.T. Seismic Telemetry System is to provide wide-band azimuthal coverage in the near-field of a seismic event. Simultaneous detection and recording of ground motion at three points is now possible, and a fourth station will be added during the next year. The system is composed of three stations. Each of two Remote Data Stations detect three orthogonal components of ground motion, perform signal processing on them and telemeter the data by FM radio to a Local Data Station. The Local Data Station detects three components of ground motion as well, and similarly performs signal processing. However, instead of transmitting its data, the Local Data Station receives the radio signals from the two Remote Data Stations, and acts as a meeting place for the three sets of data.

In each data station, the ground motion sensors are force balanced accelerometers. The signals from these three orthogonal sensors are directly proportional to ground acceleration. Two types of signal processsing are done in each data station. One active filter for each component performs a double integration and amplifies the signal to give an output proportional to ground displacement. The other active filter is a band pass filter, whose output is proportional to ground acceleration. Hence, six data signals originate from

each data station. Each of the six data signals drives a Voltage Controlled Oscillator (VCO) to produce six frequency modulated data subcarriers. In the Remote Data Stations, the combined subcarriers (called the multiplex signal) modulate an FM transmitter which transmits through a directional antenna. In the Local Data Station the data remains in multiplex form.

From the Local Data Station, the three multiplex signals (one locally generated, two received by radio) pass to the Recording and Discriminating Unit (RDU). Here, each multiplex signal is mixed with a crystal controlled reference frequency for tape speed compensation and sent to the Tape Unit to be recorded.

During playback of the tape, one multiplex signal at a time is discriminated, with the use of a reference discriminator and six data discriminators. The data discriminator outputs return the six original data signals.

A 1/2-second time mark generator in the Local Data Station provides a timing signal which is recorded on one track of the Tape Unit. A WWV radio receiver signal is recorded on another tape trace for precise, absolute timing.

Power is supplied to each data station by a series combination of car batteries to give 30 V.D.C. Power for the Tape Unit and Recording and Discriminating Unit must be 110 V.A.C., either 50 or 60 cycles per second.

B. Mechanical Description

The data stations are housed in weather-tight aluminum cases, measuring 17" deep x $20\frac{1}{2}$" wide x $11\frac{1}{2}$" high, including connectors. The Remote Data Stations weigh 32 pounds each. The Local Data Station weighs 34 pounds.

The Recording and Discriminating Unit is housed in a deep aluminum case, measuring 15" x $9\frac{1}{2}$" x $25\frac{1}{2}$", and weighing 63 pounds.

The Tape Unit is an Ampex FR-1300. Its dimensions are 24" x 18" x $12\frac{1}{2}$". It weighs approximately 110 pounds.

C. System Description

1. Accelerometers

Each station has three Systron-Donner model 4310 accelerometers - two horizontal and one vertical. Each accelerometer's full scale range is ± 1 g. and the nominal full scale output is ± 7.5 volts. Output impedance is about 5 k. ± 15 volt power is supplied to each accelerometer. Natural frequency is about 150 Hz. and damping, achieved electrically, is .7 times critical. Frequency response is flat from D.C. to over 100 Hz.

The three accelerometers are mounted mutually orthogonally on the base of a sealed aluminum container. On the flange at the base of the container are eight mounting bolt holes. These holes may also be used to align the accelerometers. Two holes have stamped marks next to them; one is stamped "L" and one "T". Horizontal accelerations in the directions from

the center of the base to the centers of the "L" and "T" holes will produce positive output voltages in the Longitudinal and Transverse component accelerometers, respectively. An upward acceleration will produce a positive output voltage in the vertical component accelerometer.

2. Internal Calibrator

The internal calibration circuit consists of a fixed frequency (3 Hz.) oscillator and an operational amplifier follower. Output voltage is normally set to 15 volts peak to peak (corresponding to a ± 1 g. sinusoidal input). A fine gain adjustment is located inside the station case. 24-V.D.C. power to the 3 Hz. oscillator is controlled by a switch on the front panel. The calibrator signal may be applied to any combination of the three sets of filters by setting the appropriate input selector switches on the front panel to INT CAL.

In addition to the internal calibrator, an external calibration signal may be applied to the EXTERNAL CAL INPUT jack on the front panel. Setting the filter input selector switches to EXT CAL then applies this signal to the filters.

Note that all the calibrations start at the filter inputs. No transducer calibration is provided.

3. A-Filter

This filter is intended for data in the frequency band .01 to 10 Hz. In this band, the frequency response is nearly equal to an ideal double integrator (slope of 12 db per octave). The response is shown on page 30. Low frequency

high-pass sections remove the D.C. response, thereby eliminating the necessity of precise leveling of the sensors and removing drift. Maximum gain is 12,000 at .008 Hz. Unity gain is at about 2 Hz. The output of this filter is proportional to displacement within the range .01 to 10 Hz. The displacement at 0.1 Hz. corresponding to a full scale output (± 2.5 volts) is ±2.5 cm, when the Systron-Donner 4310 accelerometers are used. The electrical characteristics are summarized in Table 1.

4. B-Filter

The B filter is a band pass filter intended for data in the range .1 to 25 Hz. The response within the passband is (page 31) essentially flat, with a gain of 1/3. The high cut slope is 18 db per octave, beginning at 25 Hz. The low cut slope, which is 6 db per octave beginning at .025 Hz. eliminates the need for precise accelerometer leveling and removes drift. The output voltage is proportional to acceleration. Full scale ± 1 g. input acceleration produces full scale ± 2.5 volts at the output, when the Systron-Donner 4310 accelerometers are used. The electrical characteristics are summarized in Table 2.

5. Voltage Controlled Oscillators and Mixer Amplifiers

The output of each of the six filters drives the analog input of a voltage controlled oscillator (VCO). They are I.E.D. model CSO-300-1 oscillators. The VCO center frequencies

are 2.3, 3.3, 4.3, 5.3, 6.3, and 7.3 kHz. Full frequency deviation for each VCO is ±250 Hz., which is produced by full scale inputs of ±2.5 volts. The six output subcarriers are combined in an I.E.D. CMA-400 mixing amplifier and the complete multiplex signal is used to modulate the transmitter.

6. Transmitters and Receivers

Each of the two Remote Data Stations has a transmitter. They are Conic Corp. model CTM-405k 5 watt FM telemetry transmitters. Carrier frequencies are 377.5 MHz. and 391.5 MHz. Power is supplied from the regulated 25 volt supply and controlled by a switch on the fron panel.

The Local Data Station contains two Conic Corp. model CAR-210 FM receivers, one tuned to each of the above frequencies. A meter on the front panel of the Local Data Station indicates the strength of the received r.f. signal in each of two receivers. Power to the receivers is controlled by a switch on the front panel. The radio link characteristics are summarized in Table 3.

7. Antennas

The transmitting antennas are specially designed and tuned. They are Decibel Products model DB-402. They both nominally cover the frequency range 377-391 MHz. Each consists of two stacked elements on a vertical mast. Radiation is vertically polarized, and the horizontal radiation pattern is elliptical. Forward gain is ±6 db above a half-wave dipole. Impedance is 50 ohms.

The receiving antenna is Decibel Products model DB-404 SP. It is an omni-directional antenna for 377-391 MHz.

consisting of two double elements stacked on a vertical mast. Two receivers are fed from this antenna by means of a T-connector in the transmission line. Impedance is 50 ohms.

8. Recording and Discriminating Unit (RDU)

a. Recording

The left most plug-in module in the RDU is the E.M.R. model 4810 Reference oscillator and Amplifier. The top of this module is a stable reference oscillator operating at 17 KHz. The bottom half is a two-input broad-band mixing amplifier. It consists of two identical amplifiers, each of which is identical to the 4810 amplifier section. These three amplifiers each amplify and mix one multiplex signal coming from the Local Data Station with the 17 KHz. reference tone. The three composite outputs are sent via coaxial cables to the record inputs of channels 1, 2 and 3 of the Ampex FR-1300 tape recorder. The purpose of adding the 17 KHz. tone to the multiplex is to provide a reference frequency for tape speed error compensation after playback.

b. Discriminating

The third and fourth modular spaces from the left contain the E.M.R. model 4130/4131-51 reference discriminator. The reproduced multiplex signal from the tape recorder first passes through this unit, where the 17 KHz. signal is separated and demodulated. The demodulated signal equals zero except when speed fluctuations in the tape recorder frequency-modulate the reference tone. Thus, this signal is an analog representation of the tape speed error. This signal is called the tape speed compensation (TSC). Meanwhile, the multiplex

data in the reference discriminator must undergo a time delay to assure that the TSC is applied at the proper time in the data discriminators. Upon leaving the reference discriminator, the delayed multiplex signal enters all six data discriminators.

The last six modular units are E.M.R. model 4150 data discriminators. Each one consists of a band-pass input filter (BPIF) tuned to a particular subcarrier band, an FM discriminator, and a low-pass output filter (LPOF) with a cut-off frequency of 25 Hz. The six BPIF's are each tuned to a different subcarrier band, and the FM discriminators have responding center frequencies (which are the same as the VCO center frequencies - 2.3, 3.3, 4.3, 5.3, 6.3 and 7.3 KHz.). The TSC signal is also applied to each data discriminator, and tape speed error correction is made here. The LPOF's reduce any noise outside the data pass-band.

In the jack-panel above the modular units are coaxial output connectors. Jacks labeled TIME and WWV provide 1/2 second timing marks and the WWV receiver audio output as reproduced from the tape recorder. Jacks labeled LA, LB, TA, TB, VA, VB provide the data outputs from the six data discriminators below them (i.e. LA is the output of the 2.3 KHz. discriminator, and VB is the output of the 7.3 KHz. discriminator).

9. <u>1/2-Second Time Mark Generator</u>

Inside the Local Data Station is an astable multivibrator, which produces a time mark pulse every half second. This signal goes directly onto one track of the Tape Unit.

10. WWV Receiver

A portable, battery operated radio receiver (Specific Products model WWVT) is used to provide accurate absolute timing signals from WWV. The audio output from the receiver is recorded directly on one track of the tape unit.

11. Tape Unit

The Tape Unit is an Ampex model FR-1300 7-track portable recorder. It records on $\frac{1}{2}$-inch magnetic tape. Tape speeds are switchable, and a recording speed of $3\frac{3}{4}$ or $7\frac{1}{2}$ inches per second may be used in this system. Recording time at $3\frac{3}{4}$ i.p.s. with 3600 foot tapes is 3 hours. Electronics for the multiplex data channels are direct record and reproduce, while electronics for all other channels are FM record and reproduce.

12. Data Station Front Panels

The following are found on the front panels of the data stations.

a. Power Supply Meter

0-50 V.D.C. meter in upper right corner monitors four power supply voltages.

b. Power Supply Meter Switch

Five position rotary switch below the power supply meter allows checks on battery voltage (BAT), 24 volt regulated

supply, parametric amp regulated supply voltage (VR) and 30 volt regulated supply.

c. Input Selector Switches

Three position rotary switches select the input to each of the three sets of filters (one switch each for longitudinal, transverse and vertical components). Input may be the normal accelerometer input (OP), the internal calibrator (INT CAL) or a signal applied as external calibration (EXT CAL).

d. Accelerometer Test Jacks

Directly below the input selector switches for each component are test jacks for the corresponding accelerometer outputs. Signals at these jacks are direct, unfiltered accelerometer outputs. (7.5 volts/g., 5 kilohms impedance).

e. A-Filter Output Jacks

Directly below the accelerometer test jacks are output jacks for the corresponding A-filters.

f. B-Filter Output Jacks

Directly below the A-filter output jacks are output jacks for the corresponding B-filters.

g. External Calibrate Input Jack (EXT CAL INPUT)

A signal generator may be connected to this point. This signal can be applied to any or all of the filter inputs by turning the appropriate input selector switch to EXT CAL. Input impedance at this jack is greater than 1 Megohm.

h. Internal Calibrator Power Switch (INT CAL POWER)

Applies power to activate internal calibrator.

i. Transmitter Power Switch (Local Data Station only).

Applies power to the FM transmitter.

j. Receiver Power Switch (Local Data Station only)

Applies power to both FM receivers.

k. M1 (M2) Test Jack (Remote Data Stations only)

Provides for monitor of multiplex signal which modulates the FM transmitter.

l. Time Mark Generator Output Jack (Local Data Station only)/TIME).

Provides for monitor of .5 second time marks.

m. M1 and M2 Test Jacks (Local Data Station only).

Provides monitor of audio output signals from FM receivers #1, 2.

n. M3 Test Jack (Local Data Station only).

Provides monitor of the multiplex signal from the Local Data Station VCO's and mixing amplifier.

13. Power Supplies

In each data station, several regulated power supplies provide the voltages needed by the stations components. All the power supplies begin with the 30 V.D.C. from the car batteries.

A Technipower model CX-95 series regulator provides a nominal 24 volts for the transmitters, receivers, calibrator, and pump. The RA-TEK model P-1 pump runs off the 24 volt supply and provides the 455 kc. oscillator signal to run the parametric amplifiers in the A-filters. The P-1

pump also supplies a regulated nominal 19 volts to the parametric amps. A Transformer Electronics Co. model 9646-101 Dual Converter generates balanced ±21 volts, which in turn supplies a Philbrick Dual Regulator, model 2101. This provides regulated ±15 V.D.C. for the operational amplifiers in the filters, the operational amplifier in the calibrate circuit, and the accelerometers. All the power supply modules are mounted on a fiberglass sub-chassis in each data station.

Section II

Initial Operating Procedures

A. Data Stations

1. Site selection is important. Sites chosen must conform to geological and geophysical considerations. In addition, the telemetry system requires a line of site (or nearly so) transmission path between each Remote Data Station and the Local Data Station. Do not choose sites blocked from each other by high obstructions.

2. Set the data station in a shady place, if possible. If 1 g. accelerations are expected, tie foam padding to the bottom and sides for shock protection.

3. Align and set the accelerometer package approximately level. Hold it to the rock with rock anchors and bolts, or plaster of Paris.

4. Attach the cable from the accelerometer package to the data station at both ends.

5. Set up the car batteries in a series arrangement to give 30 V.D.C. (e.g., two 12 volt and one 6 volt batteries). Attach the power cable to the batteries, observing proper polarity (white lead to positive, black to negative).

6. Set up the antenna. It should be securely held in a vertical position. The transmitting antennas should be aimed toward the receiving point. Forward direction of the transmitting antenna is pointing from the mast through the elements.

7. Attach the antenna coax cable(s) to the transmitter or receivers, being careful to keep the r.f. connectors clean inside.

8. Turn the transmitter or receiver power switch off. Turn the internal calibration power switch off. Set the input selector switches to OP.

9. Apply power to the data station by connecting the power cable to the data station.

10. Observe the voltages on the volt meter.

11. Wait at least 15 minutes before turning on the transmitter.

B. Recording and Discriminating Unit

1. Set the RDU in its most stable position with the connectors on top. Prop up the front end with the case cover. Make sure that the fan opening in the back is not obstructed.

2. Check to see that all the plug-in modules in the RDU are fully in place.

3. Attach the cables from the RDU to the Local Data Station and to the Tape Unit. Be very gentle with the miniature coaxial connectors to the Tape Unit.

4. Set the controls in the RDU as follows:

4810 Oscillator	ON
4810 Amp Gain	2
4830 Amp 1 Gain	2
4830 Amp 2 Gain	2

4130	NEG
4130 B.E. Volts	Do not adjust
4130 TSC	ON
4150's	CA

5. Apply 110 VAC power to the RDU by connecting the power cable.

C. Tape Unit

1. Set the Tape Unit in the upright position, in the shade, if possible.

2. Load a tape.

3. Check in the back section to see that all the plug-in electronics modules are secure.

4. Attach the power cord.

5. Consult Ampex instruction manual for operating instructions.

Section III

Principles of Operation

A. Signal-to-noise Ratio

One of the major sources of noise is attributable to the tape recorder. The noise arises from two separate areas of the recorder and can be classified as "amplitude noise" generated within the pass band of the direct--record electronics and as "frequency modulation noise" created by the wow and flutter characteristics of the machine. The noise components introduced by the radio link will be discussed in another section.

1. Amplitude Noise

The Ampex FR-1300 tape recorder provides a 30 db broadband signal-to-noise figure over a bandwidth of 38 kHz. at tape speed of 7.5 i.p.s. Assuming this noise is evenly distributed over the passband, the data discriminator output signal-to-noise ratio from this noise source can be computed as follows:

$$\frac{S_o}{N_o} = \sqrt{3} \quad \beta^{3/2} \quad \frac{S_i}{N_i}$$

where S_o = the maximum rms sinewave output data signal,

N_o = the rms output noise due to pass band noise,

β = the deviation ratio, i.e., one half of the total FM bandwidth divided by the maximum data frequency,

S_i = the rms voltage of the FM subcarrier, and

N_i = the rms noise out of the discriminator input filter.

B_T = the tape recorder bandwidth or 38 kHz.

B_C = the data channel bandwidth or 500 Hz.

Then, $\frac{S_i}{N_i} = 30 \text{ db} + 20 \log_{10}\left(\frac{38\text{x}10^3}{5\text{x}10^2}\right)^{1/2} = 49 \text{ db}.$

This figure is the S/N ratio of the multiplex signal at the input to the discriminators. It does not take into account the number of subcarriers, n, which comprise it. For equal amplitude subcarriers, $\frac{S_i}{N_i}$ for each subcarrier is $\frac{1}{n}$ times that for the multiplex. In our system, there are 6 data subcarriers and one double amplitude reference subcarrier. Hence, n = 8 and $\frac{S_i}{N_i} = 49 \text{ db} - 20 \log_{10} 8 = 30.4 \text{ db}$

A slight improvement can be made by slightly over-modulating the tape recorder, according to a method described by Nichols and Rauch [1]. For overmodulation statistically 0.1% of the time, the improvement is 1.6 db. Hence, $\frac{S_i}{N_i} = 32$ db. Now to compute $\frac{S_o}{N_o}$ with $\beta = 10$.

$$\frac{S_o}{N_o} = \sqrt{3}\,(10)^{3/2}\,\frac{S_i}{N_i}$$

$$= 32 \text{ db} + 20 \log_{10}(3\text{x}10^3)^{1/2} = 66 \text{ db}.$$

2. <u>Frequency Modulation Noise (Wow and Flutter)</u>

Speed variations of the tape recorder have a direct effect

---

[1] Nichols, M.H. and L.L. Rauch, <u>Radio Telemetry</u>, Second Edition, John Wiley and Sons, p. 85.

on the accuracy of the recorded data in FM systems because the speed variation acts as a multiplier of the recorded subcarrier frequency. The percentage magnitude of the error is given by:

$$E = \frac{f_c F}{B_c}$$

Where E = the percentage peak-to-peak error signal out of the discriminator,

f_c = the subcarrier center frequency, and

F = the maximum percentage peak-to-peak flutter variation of the tape recorder.

It is readily apparent that for constant bandwidth systems the magnitude of the error signal increases to a maximum for the highest subcarrier frequency utilized. This error signal can be reduced by using tape-speed compensation to correct for the effects of speed variations in the tape recorder. By recording an unmodulated reference tone, the tape-speed error can be converted to a voltage at the output of a reference discriminator. This voltage is then applied to the tape-speed-compensation inputs of all data discriminators. To accomplish theoretically perfect performance, the compensation signal at the FM detector in the discriminator must be of the same amplitude and phase as the error signal. Since these parameters for both compensation signal and the data subcarrier signal are affected by filtering in all elements of the reduction system, perfect compensation is not

realizable. The individual discriminator specifications show the practical improvement ratios attainable for various deviation ratios.

Using the above information, the signal-to-noise ratio due to flutter of the tape recorder can be written:

$$\frac{S_o}{N_o} = \frac{100R_t}{E} = \frac{100B_cR_t}{f_cF}$$

where S_o = the maximum rms output data signal,

N_o = the rms output noise due to flutter, and

R_t = the improvement ratio as given in the discriminator specifications.

The Ampex FR-1300 has a peak-to-peak wow and flutter specification of 0.70% over a bandwidth of 1,250Hz. at 7.5 i.p.s. Using these numbers, and taking R_t = 40 db, we can determine the S/N ratio out of each subcarrier discriminator due to the tape flutter component. The narrowest deviation, or worst-case channel is 7.3 kHz. ± 250 Hz. For this channel operated at M1 = 10, the signal-to-noise ratio is

$$\frac{S_o}{N_o} = \left(\frac{100}{0.70}\right)\left(\frac{5\text{x}10^2}{7.3\text{x}10^3}\right)(100) = 9.8\text{x}10^2 = 60 \text{ db}$$

Table IV shows the results of similar computations of FM noise at all six tape speeds, and for data channels of center frequencies 2kHz., 7kHz., 10kHz., and 14kHz. This improvement figure is conservative for three reasons: (1) the flutter value used in the computations was measured a 1,250 Hz.

band, while the data bandwidth is only 25 Hz.; (2) the improvement ratio of 100 or 40 db is probably a conservative number; (3) thessignal-to-noise ratio is considered RMS to RMS while the quantities we are dealing with here are specified in peak-to-peak numbers with no information furnished as to their spectral distribution. The corresponding S/N ratio for the 2.3 kHz ± 250 Hz and 13.3 kHz ± 250 Hz channels are, respectively, 70 db and 54 db.

The EMR 4150 data discriminator specification guarantees 33 db of improvement when operating at MI = 5. EMR engineers claim 40 db is an applicable figure to out system because we will operate at MI = 10. At low data frequencies, the improvement ratio increases linearly to greater than 46 db at DC. Therefore we might expect a broadband S/N ratio from wow and flutter of 60 db for the first six channels, and better at low data frequencies.

B. Dynamic Nonlinearity (Harmonic Distortion)

In general, the dynamic nonlinearity generated in an FM system is attributable to the amplitude and phase response of bandpass filters of the narrowest pass band which filter the modulated subcarrier signals. These are: (1) the discriminator input filter and (2) the VCO output filter. Dynamic distortion of the detected FM signal is caused by changes in the amplitude and phase of componenst in the modulated-carrier spectra. The distortion can be calculated from the components

of the filtered spectrum through the use of a technique described by J. Schenck and W.F. Kennedy [2]:

EMR discriminators, when operated at MI = 2, give total harmonic distortion numbers that are less than 0.8 % and typically about 0.6% at 1/3 the data cutoff frequency. When operated at MI = 10, the total harmonic distortion will be less than 0.5 when measured at 12.5 Hz or 1/2 the cutoff frequency of the low pass filter. The total harmonic distortion figure will generally decrease in magnitude as we move away from 1/2 cutoff frequency in either direction.

C. Adjacent Channel Crosstalk

The sidebands of the adjacent FM subcarrier will produce crosstalk in each channel. The magnitude of this crosstalk is a function of channel spacing, deviation ratio, and the characteristics of both the discriminator bandpass input filter and lowpass output filter. The effect of the VCO output filter on this type of crosstalk generally is negligible. The output crosstalk of a subcarrier discriminator resulting from an interfering signal can be calculated using a method described by Arguimbau [3].

$$\text{fractional crosstalk} = \frac{f_c - f_i}{\Delta} \times (a \cos ft + a^2 \cos 2\,ft + a^3 \cos 3\,ft + \ldots)$$

---

(2) Schenck, J. and W.F. Kennedy, Analysis of Multiplex Errors in FM/FM and PAM/FM/FM Telemetry, IRE Transactions on Space Electronics and Telemetry, Vol. SET-5, Sept. 1959, pp. 138-147.

(3) Argiumbau, L.B., Vacuum-Tube Circuits and Transistors, John Wiley & Sons, 1956, p. 525.

where $f_c - f_i$ = frequency difference between the desired signal, f_c, and the interfering signal, f_i,

Δf = full-scale deviation, and

$a == \frac{A_i}{A_c}$

where A_i = amplitude of interfering signal, and

A_c = amplitude of desired signal.

All terms other than (a cos ft) represent crosstalk which is harmonically related to the fundamental beat frequency. In general, they are negligible due to output filtering. An approximate expression of overall output crosstalk resulting from an adjacent channel for n significant sidebands can be written:

$$R = \sum_n \frac{A_i}{A_c} \times \frac{f_c - f_i}{\Delta f} \times Y_{BPIF} \times Y_{OF}{}_n^2$$

where R = overall fractional rms crosstalk

$Y_{BPIF} = \frac{\text{attn. to } f_i}{\text{attn. to } f_c}$ of bandpass filter,

Y_{OF} = attn. to $(f_c - f_i)$ of output filter.

Considering the statically deviated case where channel 1 (2.3 kHz.) is at the upper bandedge and channel 2 (3.3 kHz.) is at the lower bandedge and the subcarrier amplitudes are equal, we have for the deviation ratio of 10 case

$$f_c - f_i = (3.05 \times 10^3) - (2.55 \times 10^3) = 0.50 \times 10^3$$

$$\Delta f = 0.25 \times 10^3$$

$$Y_{BPIF} = \frac{3\ db}{25\ db} = -22\ db = 0.08$$

$$Y_{OF} = 0.4 \times 10^{-4} + 30\ db - 1.3 \times 10^{-3}$$

$$R = \frac{A_i}{A_C} \frac{f_c - f_i}{\Delta f} \quad Y_{BPIF}\ Y_{LPOF}$$

$$R = 1\ \frac{0.5 \times 10^3}{0.25 \times 10^3}\ (0.08)\ (1.3 \times 10^{-3})$$

$$= 86\ db$$

The total crosstalk generated by more than one signal interfering channel can be calculated by taking the square root of the squares of each error component that is calculated.

Section IV

Schematics and Diagrams

1. A-Filter Response Curve
2. B-Filter Response Curve
3. A-Filter Full Scale Input
4. B-Filter Full Scale Input
5. System Block Diagram
6. Remote Data Station Block Diagram
7. Local Data Station Block Diagram
8. Recording and Discriminating System Block Diagram
9. A-Filter Schematic Diagram
10. B-Filter Schematic Diagram
11. Power Supplies Block Diagram

A - FILTER RESPONSE

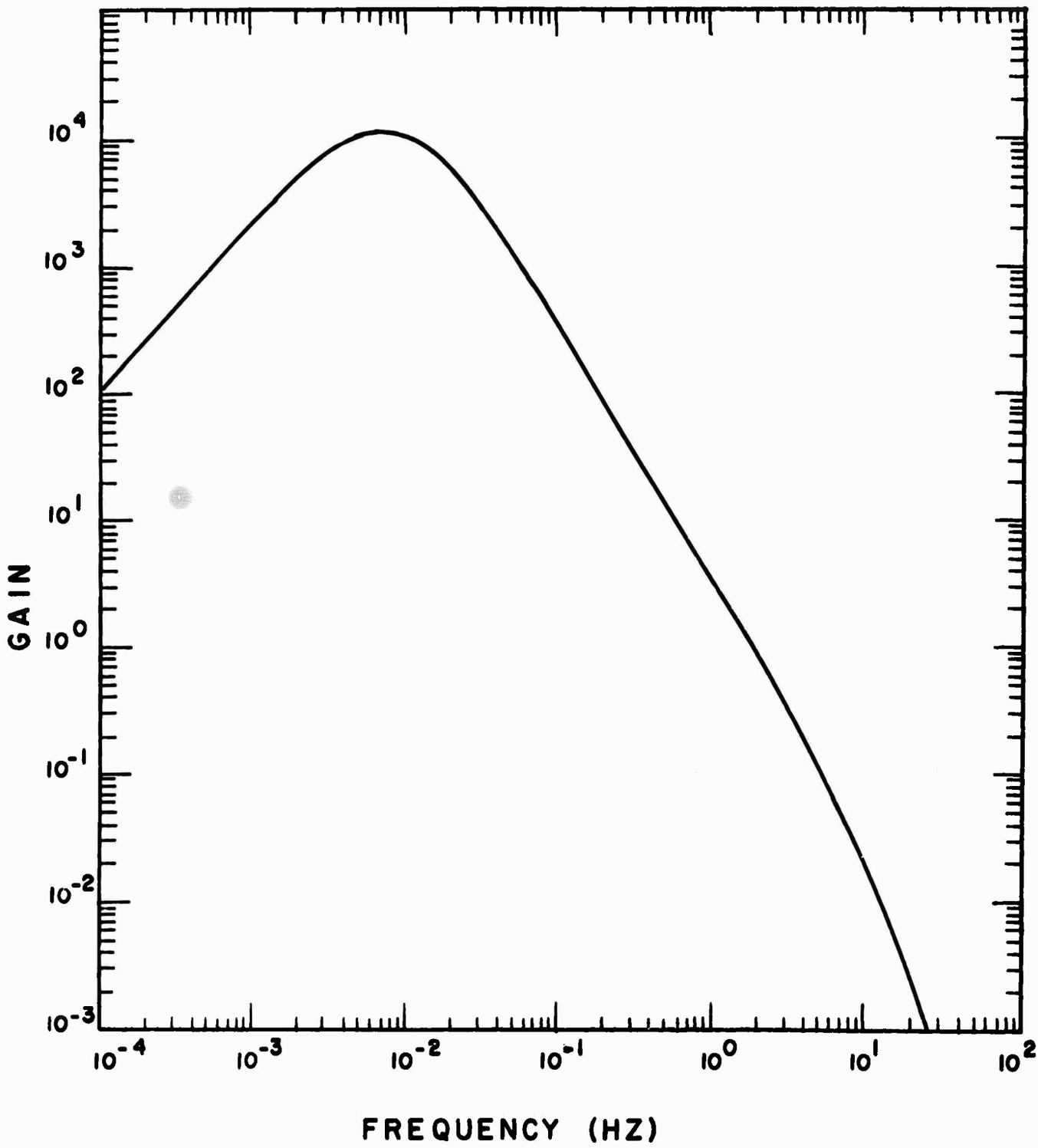

B - FILTER RESPONSE

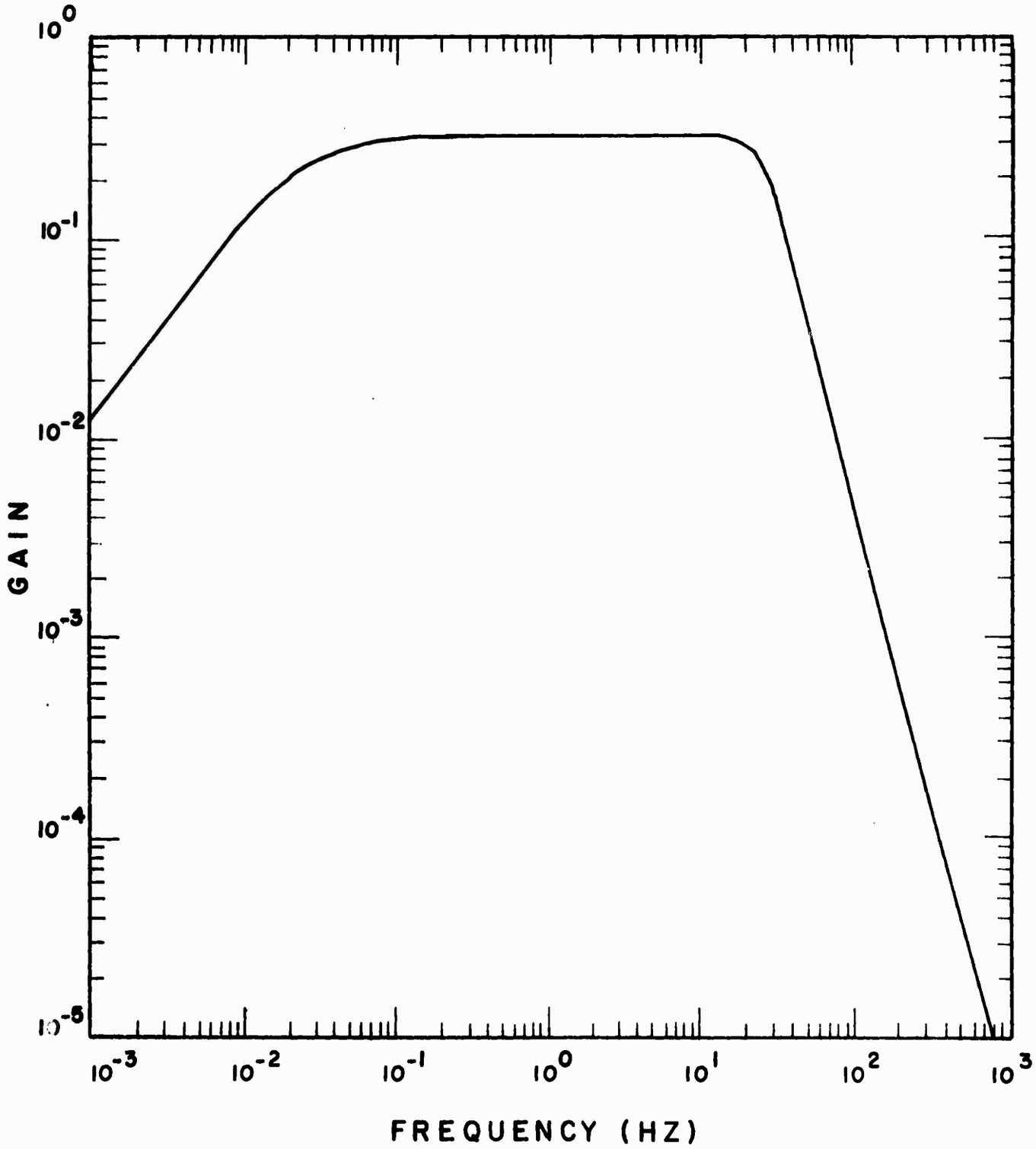

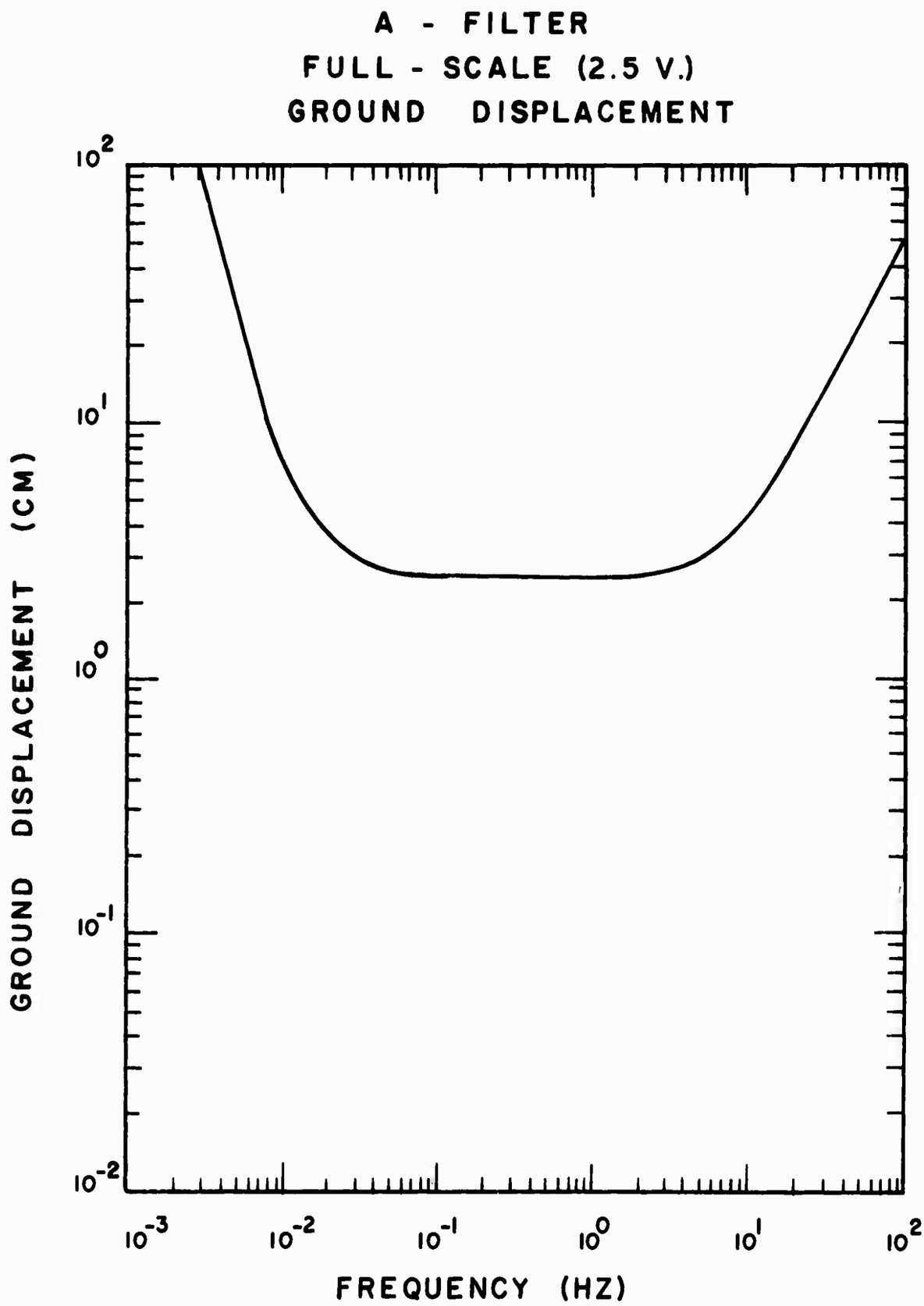
A - FILTER
FULL - SCALE (2.5 V.)
GROUND DISPLACEMENT
GROUND DISPLACEMENT (CM)
10^2
10^1
10^0
10^{-1}
10^{-2}
10^{-3}
10^{-2}
10^{-1}
10^0
10^1
10^2
FREQUENCY (HZ)

B - FILTER
FULL - SCALE (2.5 V.)
GROUND ACCELERATION

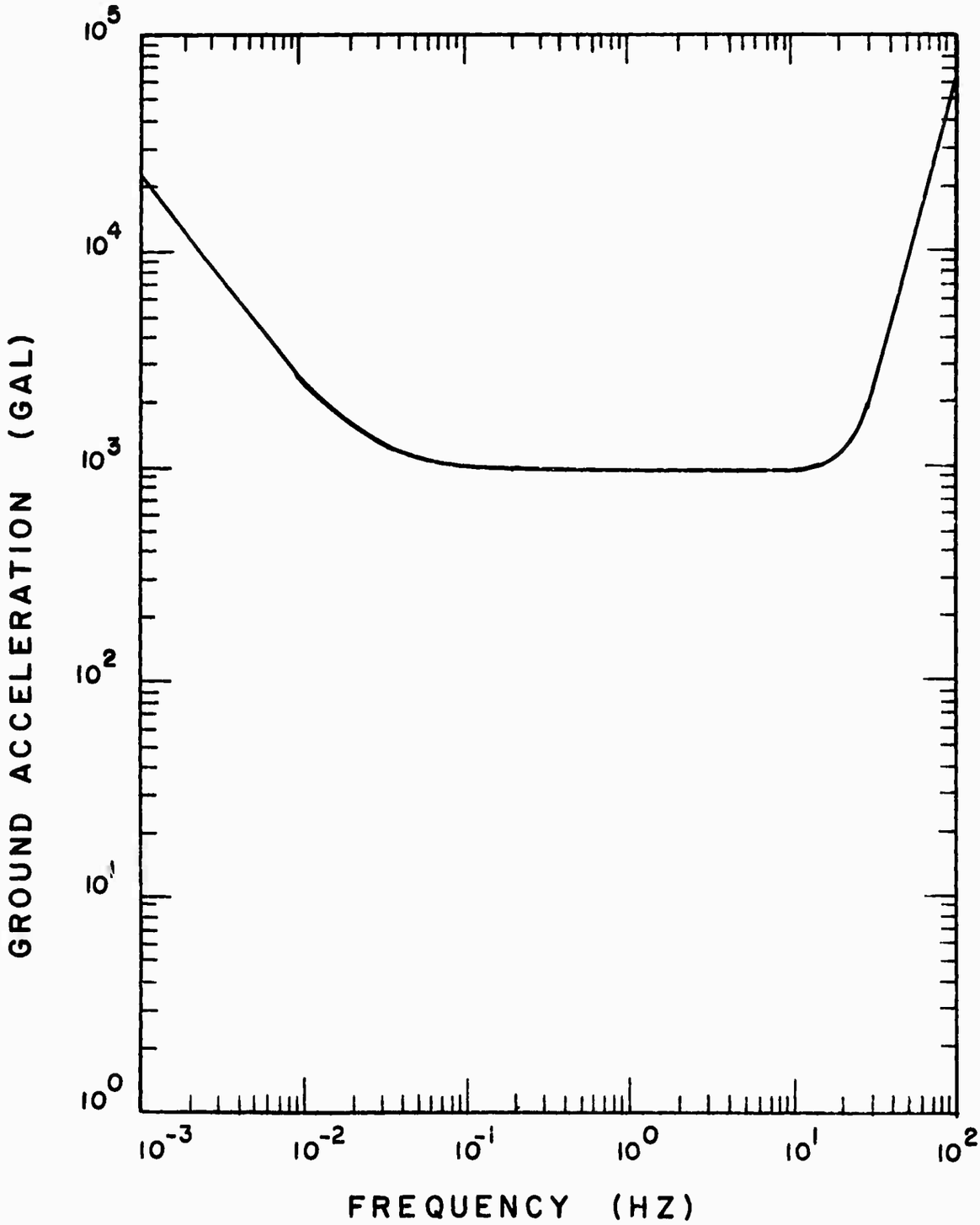

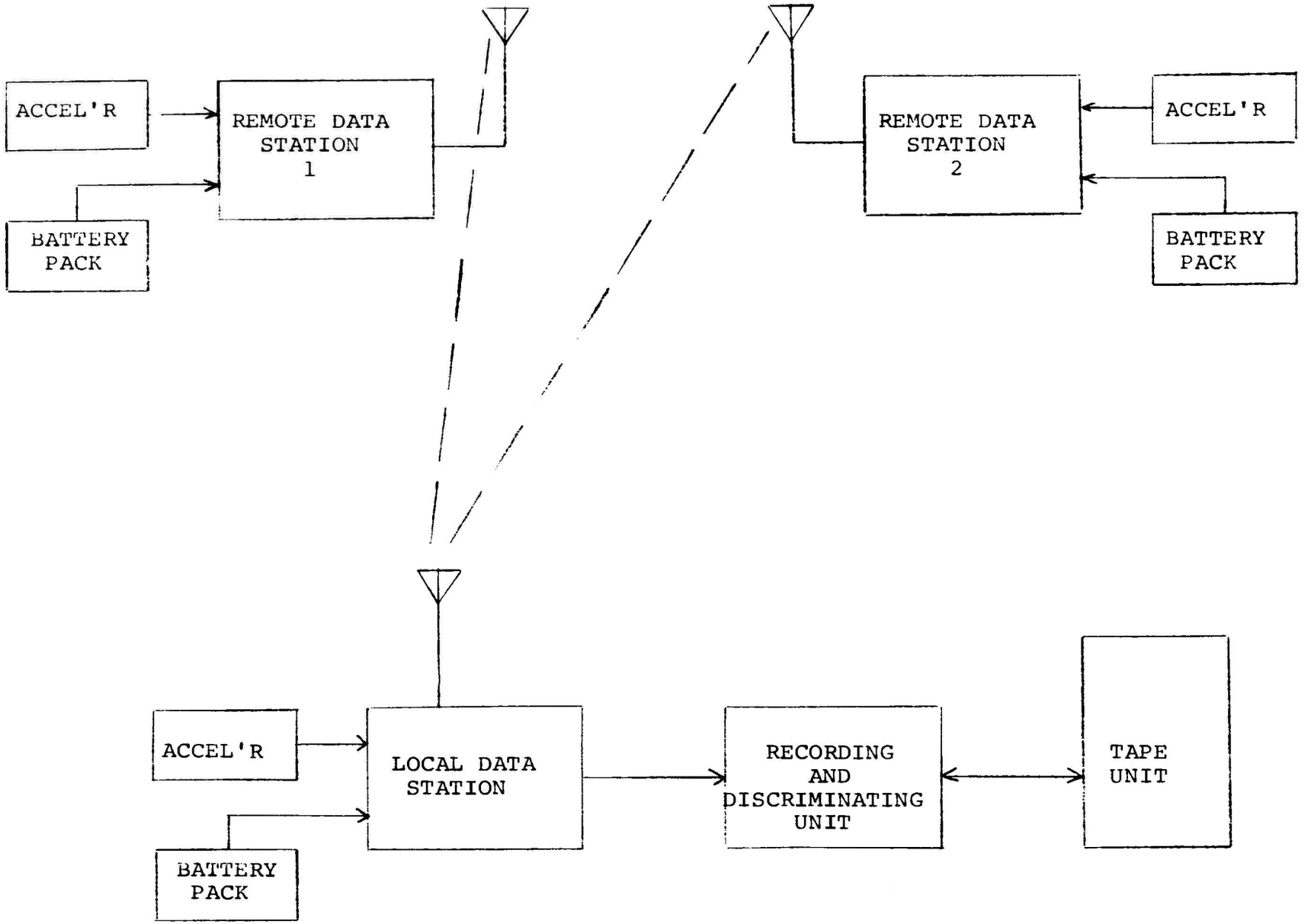
ACCEL'R
REMOTE DATA STATION 1
BATTERY PACK
REMOTE DATA STATION 2
ACCEL'R
BATTERY PACK
ACCEL'R
LOCAL DATA STATION
BATTERY PACK
RECORDING AND DISCRIMINATING UNIT
TAPE UNIT

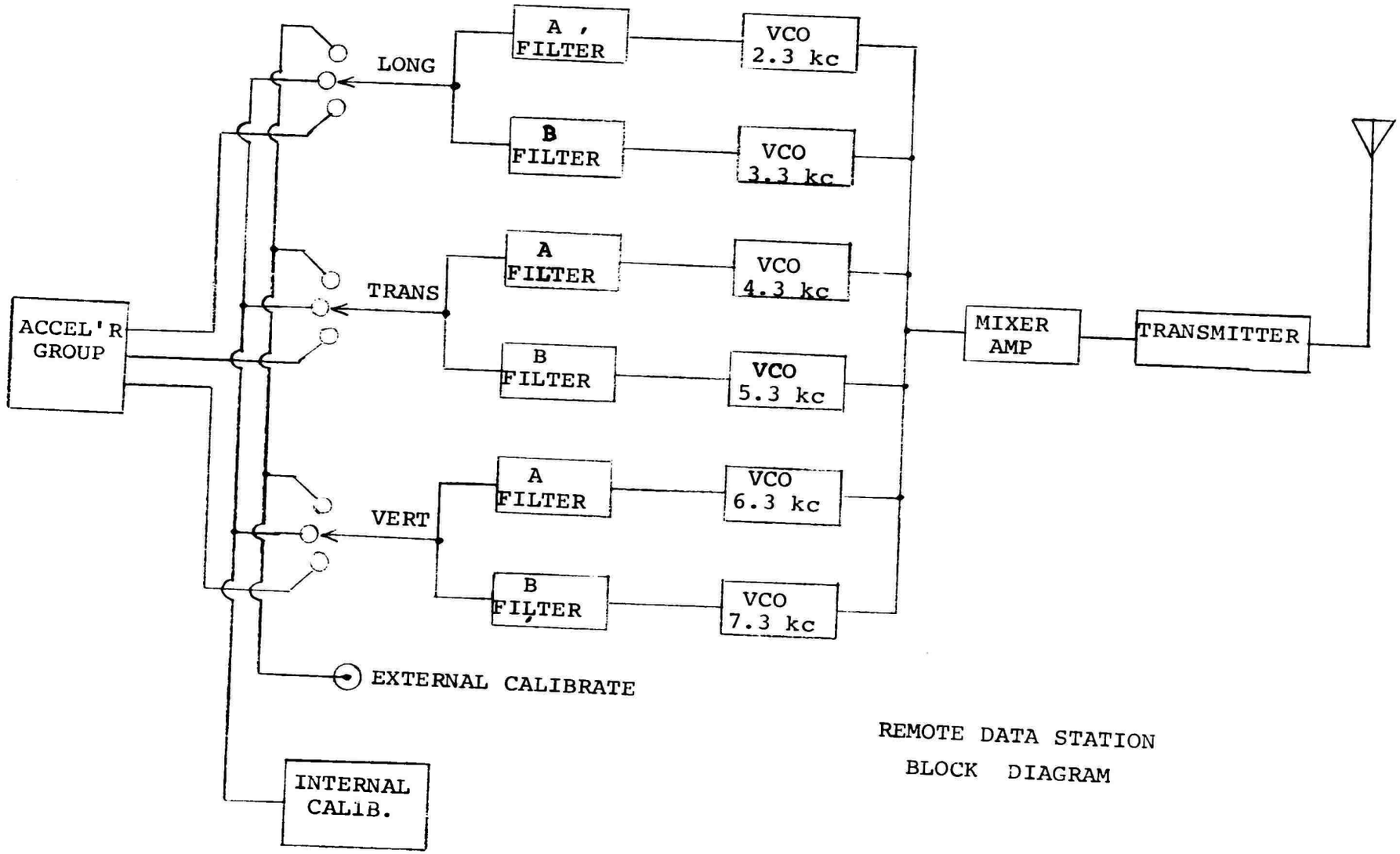

REMOTE DATA STATION
BLOCK DIAGRAM

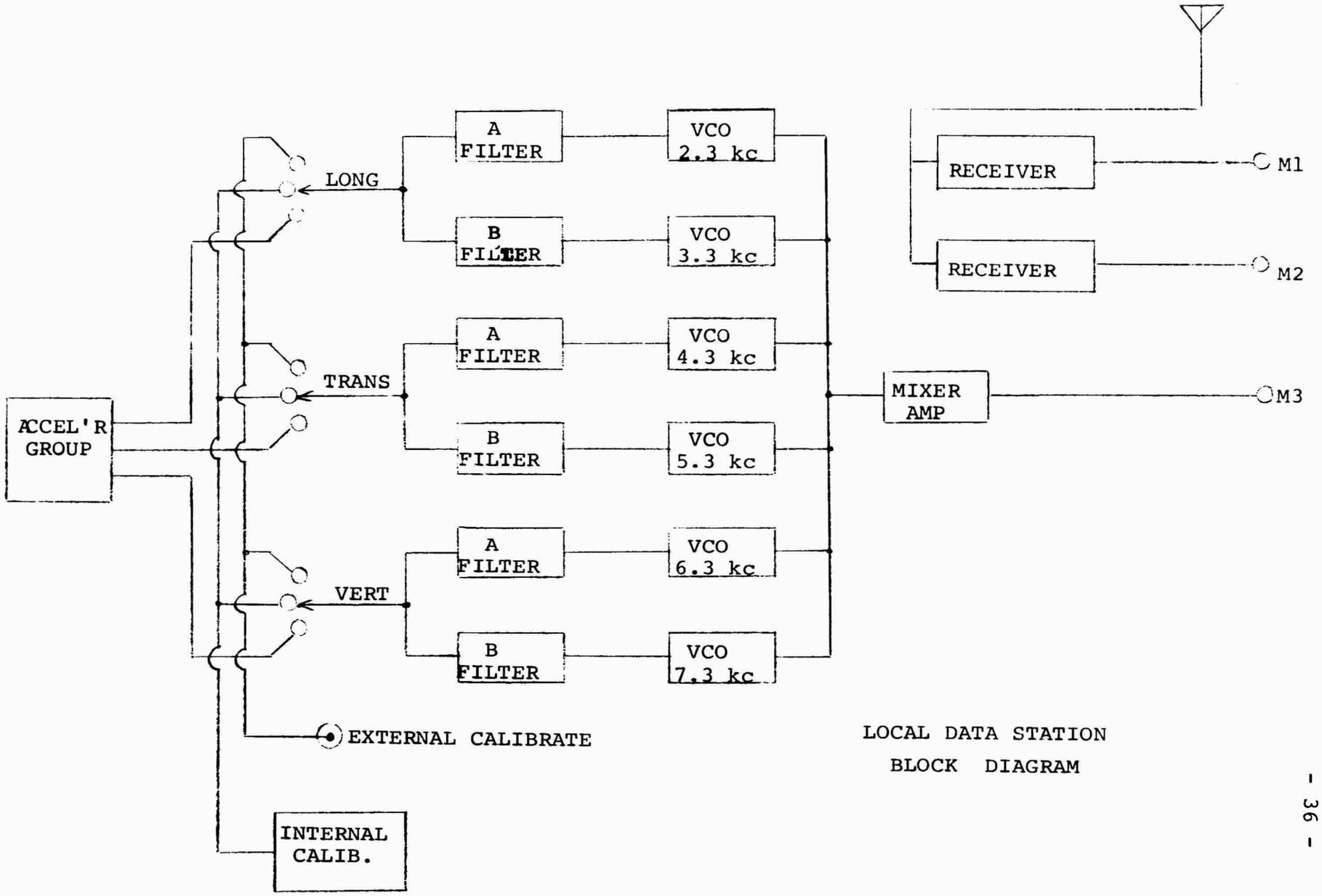

LOCAL DATA STATION
BLOCK DIAGRAM

RECORDING AND DISCRIMINATING SYSTEM
BLOCK DIAGRAM

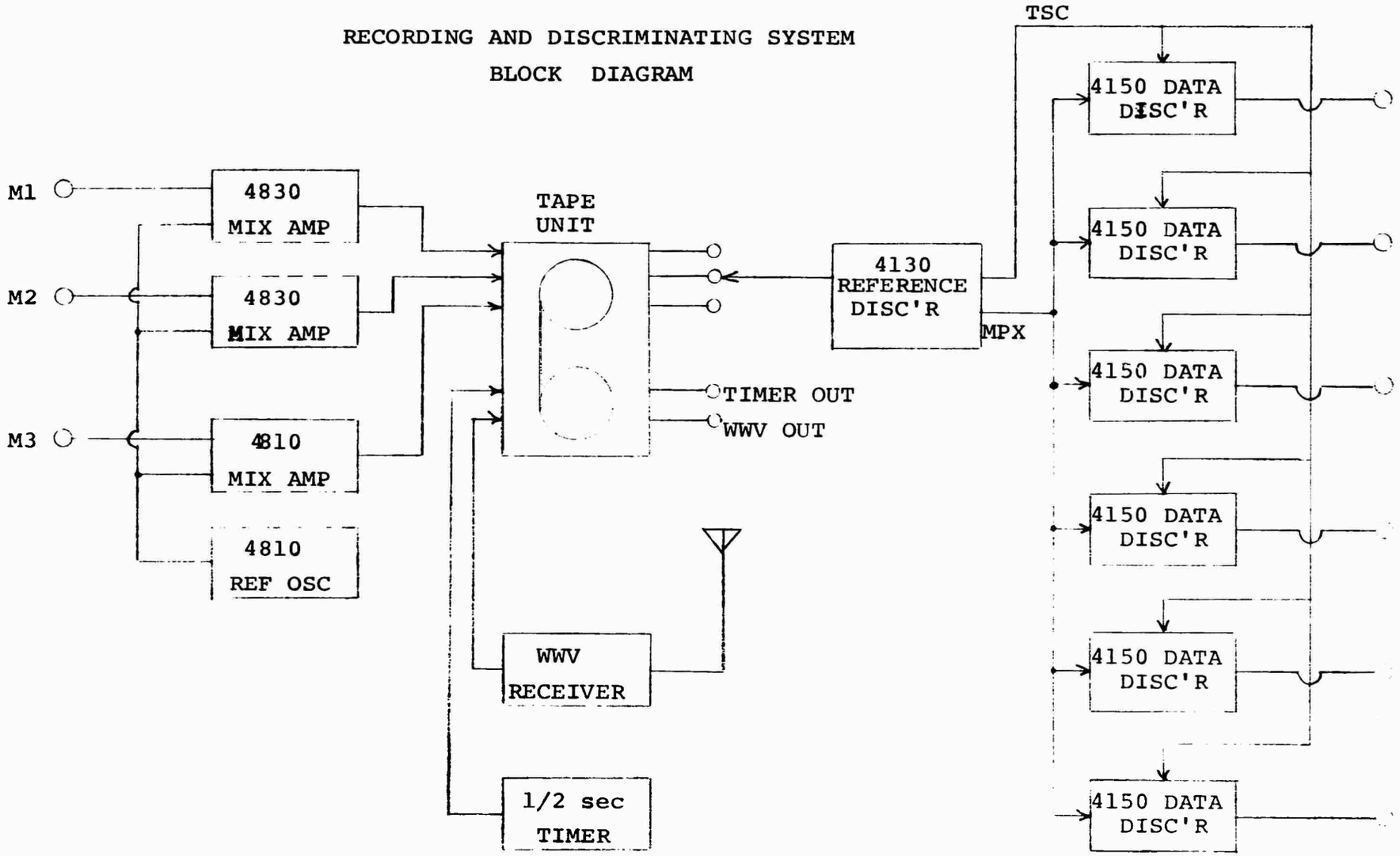

A - FILTER SCHEMATIC DIAGRAM

6 May 1971

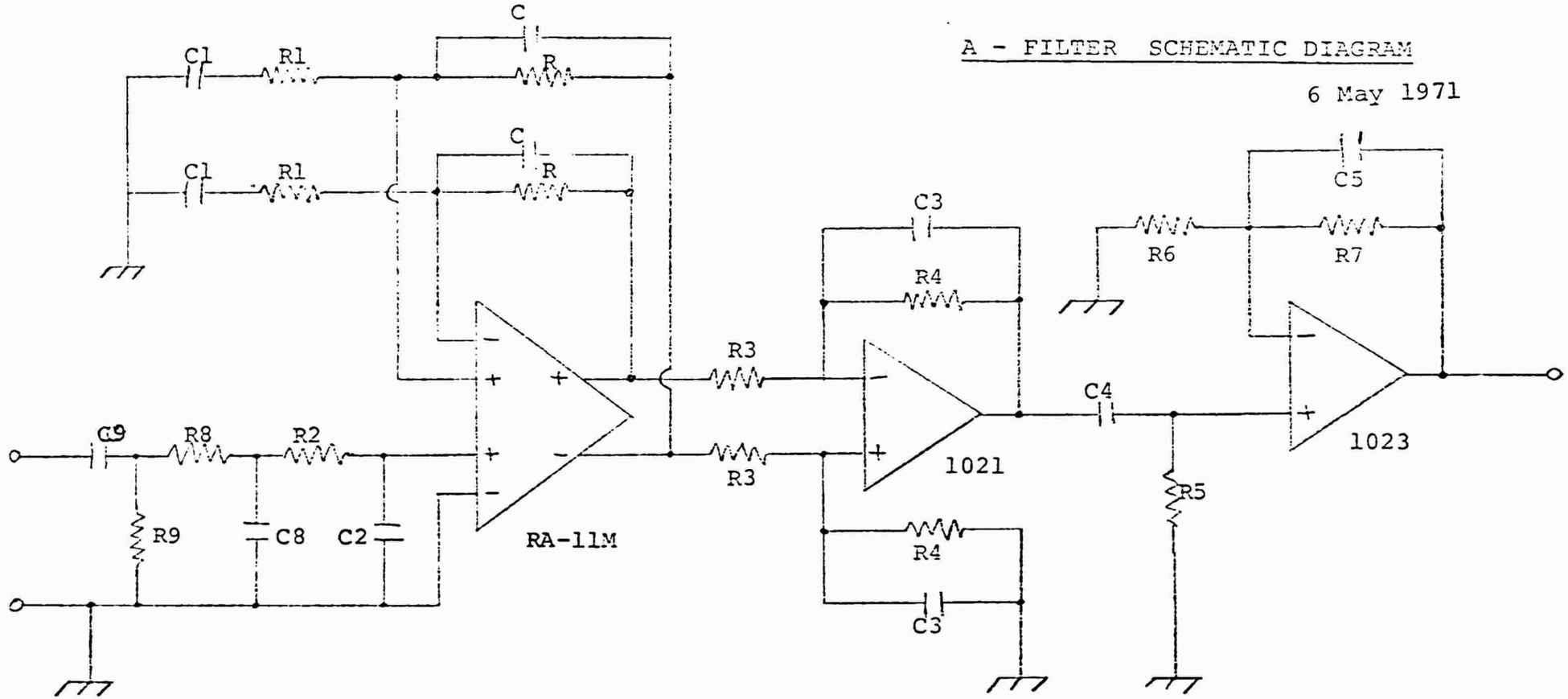

R =	15.9 M	C =	10 pf
R1 =	159 K	C1 =	100. μf
R2 =	15.9 M	C2 =	1.0 μf
R3 =	30 K	C3 =	.015 μf
R4 =	1 M	C4 =	20. μf
R5 =	7.96 M	C5 =	.15 μf
R6 =	100 K	C8 =	10. μf
R7 =	100 K	C9 =	5. μf
R8 =	1.59 M		
R9 =	5.6 M		

B - FILTER SCHEMATIC DIAGRAM

6 May 1971

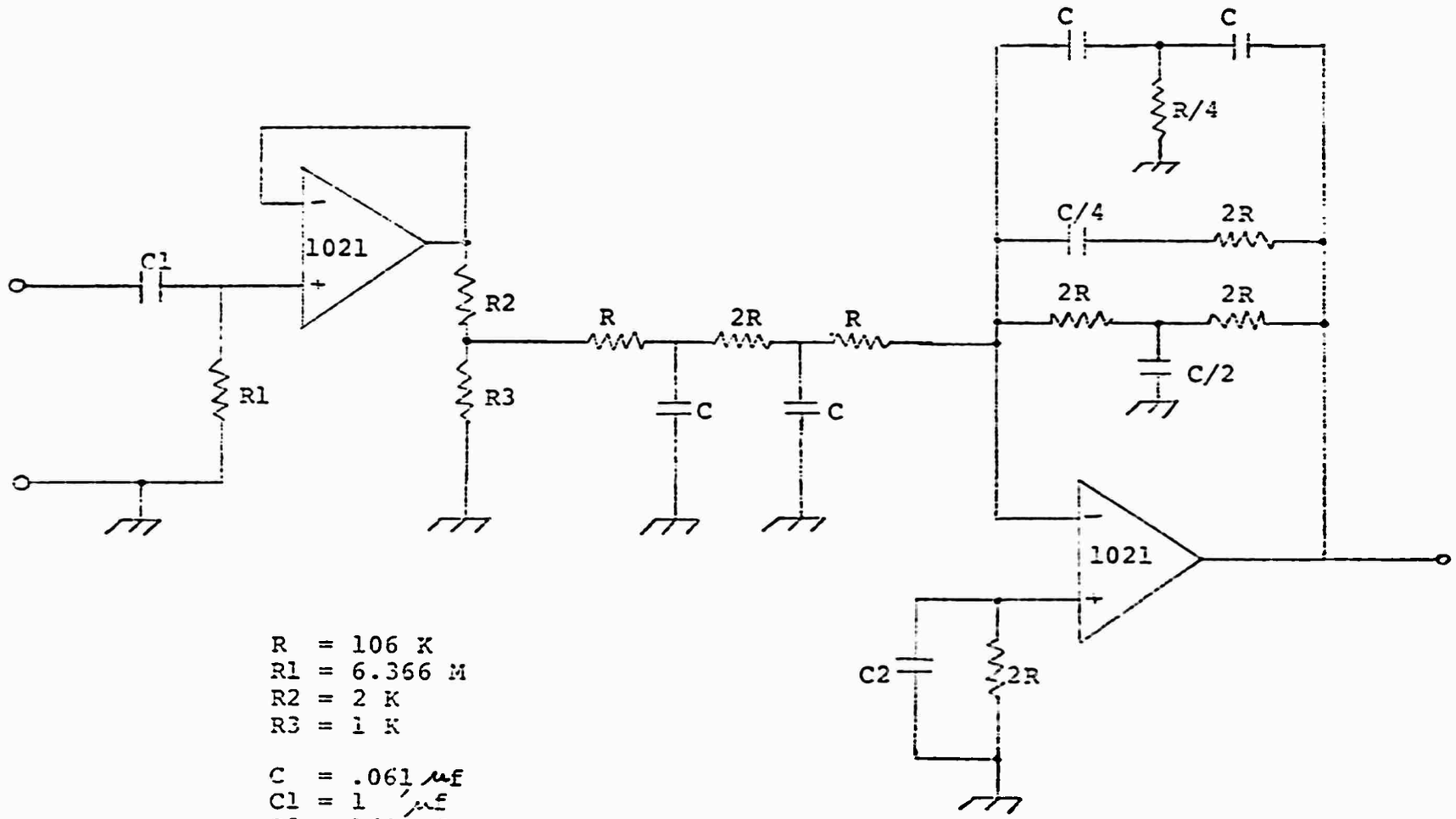

R = 106 K
R1 = 6.366 M
R2 = 2 K
R3 = 1 K

C = .061 μf
C1 = 1 μf
C2 = 160 pf

ARPA SEISMIC TELEMETRY SYSTEM POWER SUPPLIES

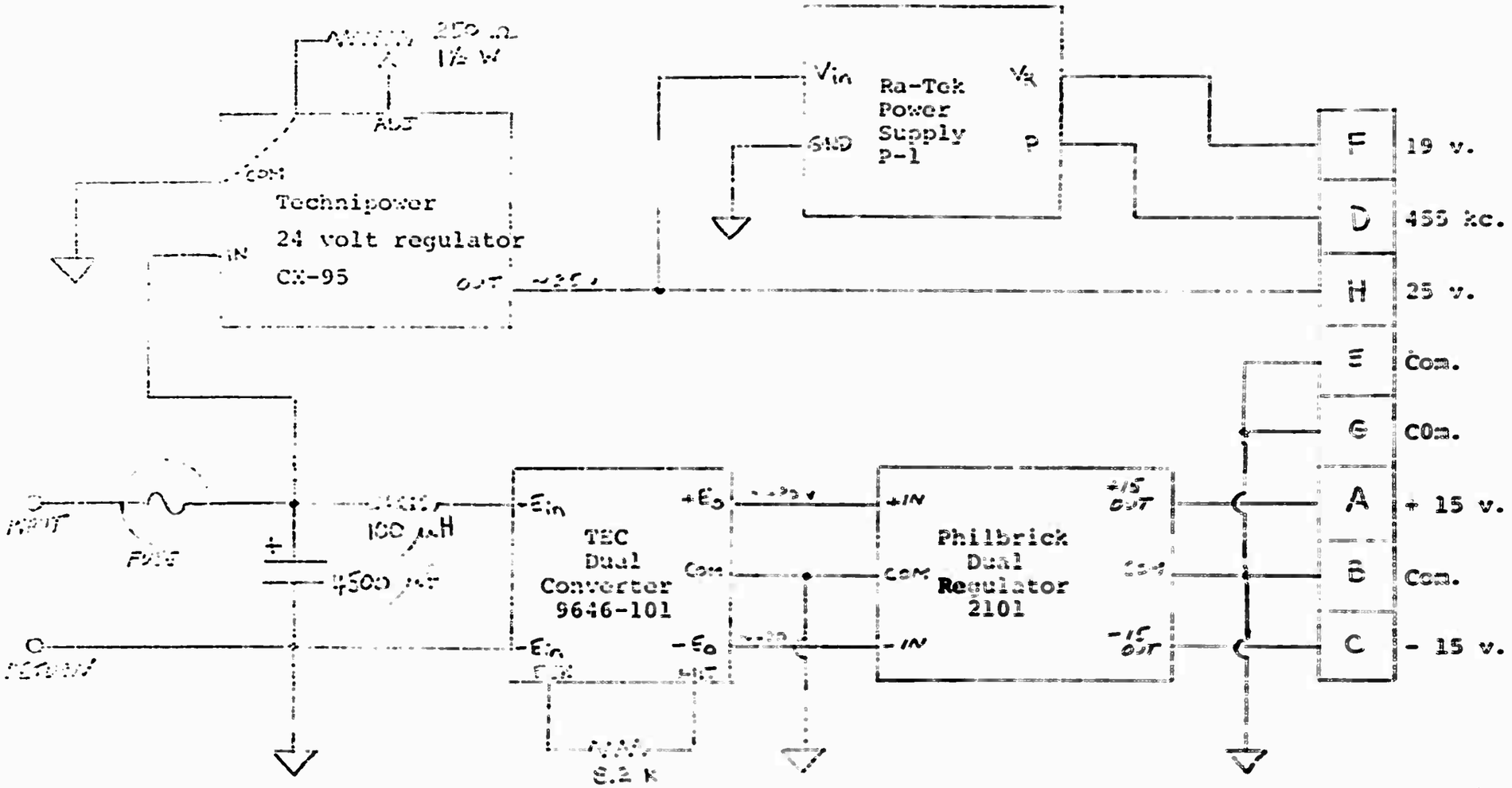

Table 1

A - Filter Electrical Characteristics

Input impedance = 1 megohm, minimum

Output impedance = 5k.

1st Stage - gain = 500

1-pole high-pass at .0057 Hz. determined by R9, C9.

2-pole low-pass at .01 Hz. determined by R8, C8 and R2, C2.

1-pole high-pass at .01 Hz. determined by R1, C1.

1-pole low-pass at 1 kHz. determined by R, C.

2nd Stage - gain = 33.33

1-pole high-pass at .001 Hz. determined by R4, C3.

3rd Stage - gain = 2

1-pole high-pass at .001 Hz. determined by R5, C4.

1-pole low-pass at 10 Hz. determined by R7, C5.

Table 2

B - Filter Electrical Characteristics

Maximum input voltage = ±10 volts

Input impedance = 6 megohn (minimum)

Output impedance = 5 k.

Low-cut frequency (determined by R1, C1) = .025 Hz.

Passband gain (determined by R2, R3) = 1/3

High-cut frequency (determined by R, C) = 25 Hz.

High-cut response = third order Butterworth

System response:

$$e_{out} = -e_{in} \frac{R_1C_1p}{1 + R_1C_1p} \quad \frac{1}{(1+RCp)[(1+RCp + (RCp)^2]} \quad \frac{R_3}{R_2 + R_3}$$

Table 3

Characteristics of FM Radio Link

Transmitters	Conic CTM-405K
Power Output	5 Watts
Receivers	Conic CAR-210
Receiver Sensitivity	5 microvolts (20 db S+N/N)
Frequencies	377.5 MHz. 391.5 MHz.
Bandwidth	234 kHz.
Transmitting Antennas	Decibel Products DB-402 6 db forward gain
Receiving Antenna	Decibel Products DB-404SP Omnidirectional
Polarization	Vertical

Table 4

Tape Speek i.p.s.	% Flutter peak to peak	$\frac{S_o}{N_o}$, f_c=2kHz.	$\frac{S_o}{N_o}$, f_c=7kHz.	$\frac{S_o}{N_o}$, f_c=10kHz.	$\frac{S_o}{N_o}$, f_c=14kHz.
1 7/8	1.4	65 db	54 db	51 db	48 db
3 3/4	1.0	68	57	54	51
7 1/2	.70	71	60	57	54
15	.45	75	64	61	58
30	.40	76	65	62	59
60	.35	77	66	63	60

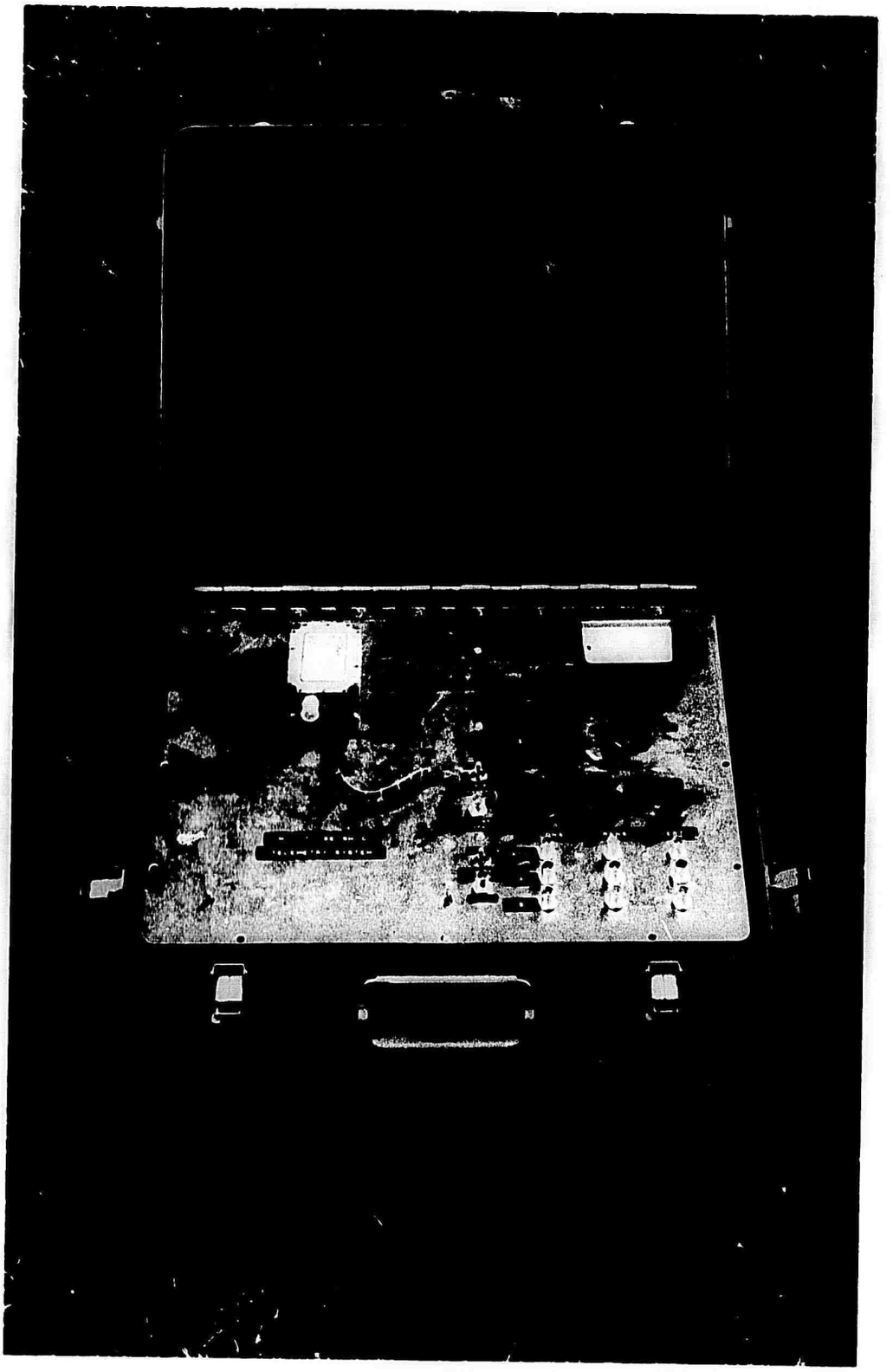

Figure 2. Remote Data Station

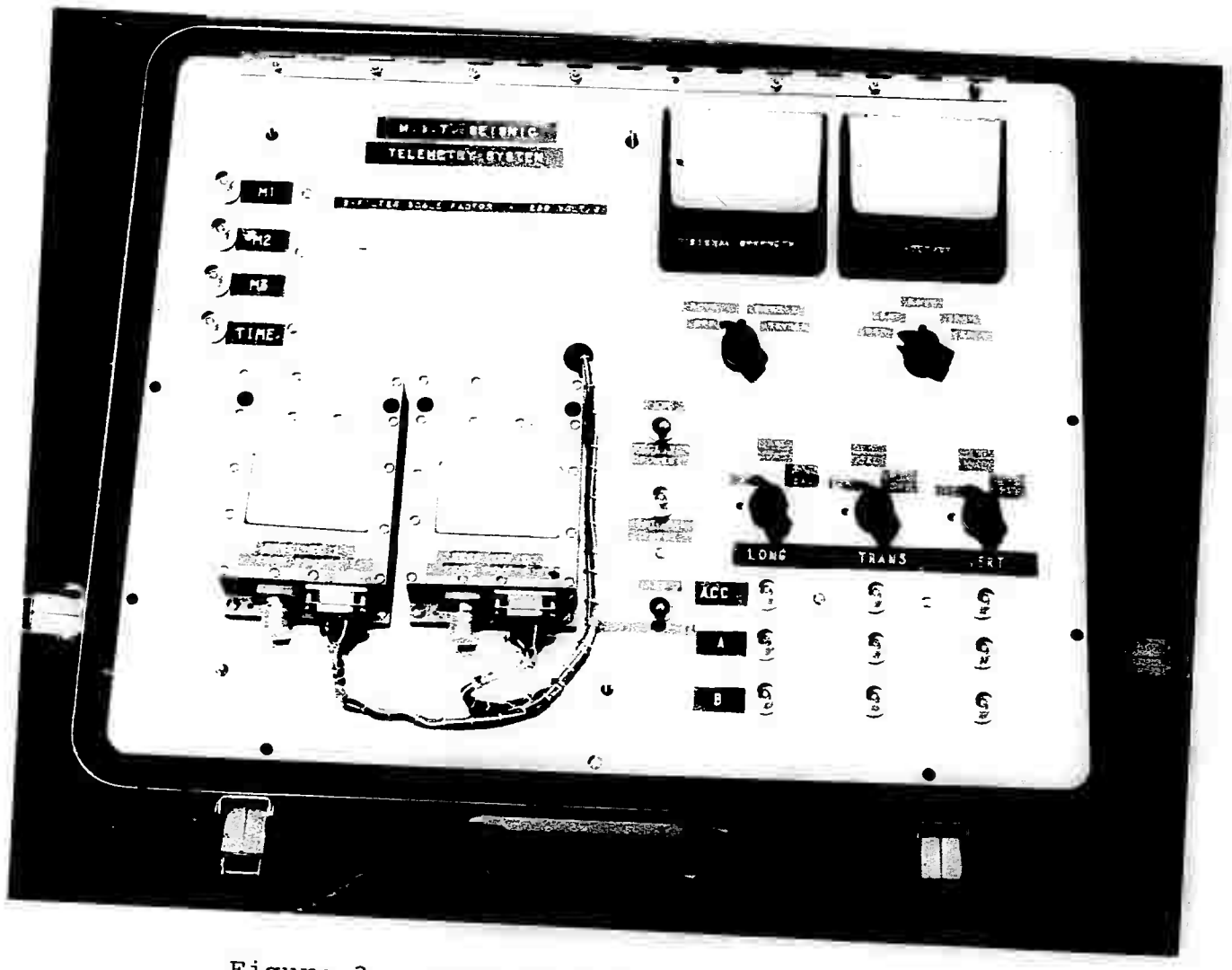

Figure 3. Local Data Station Front Panel

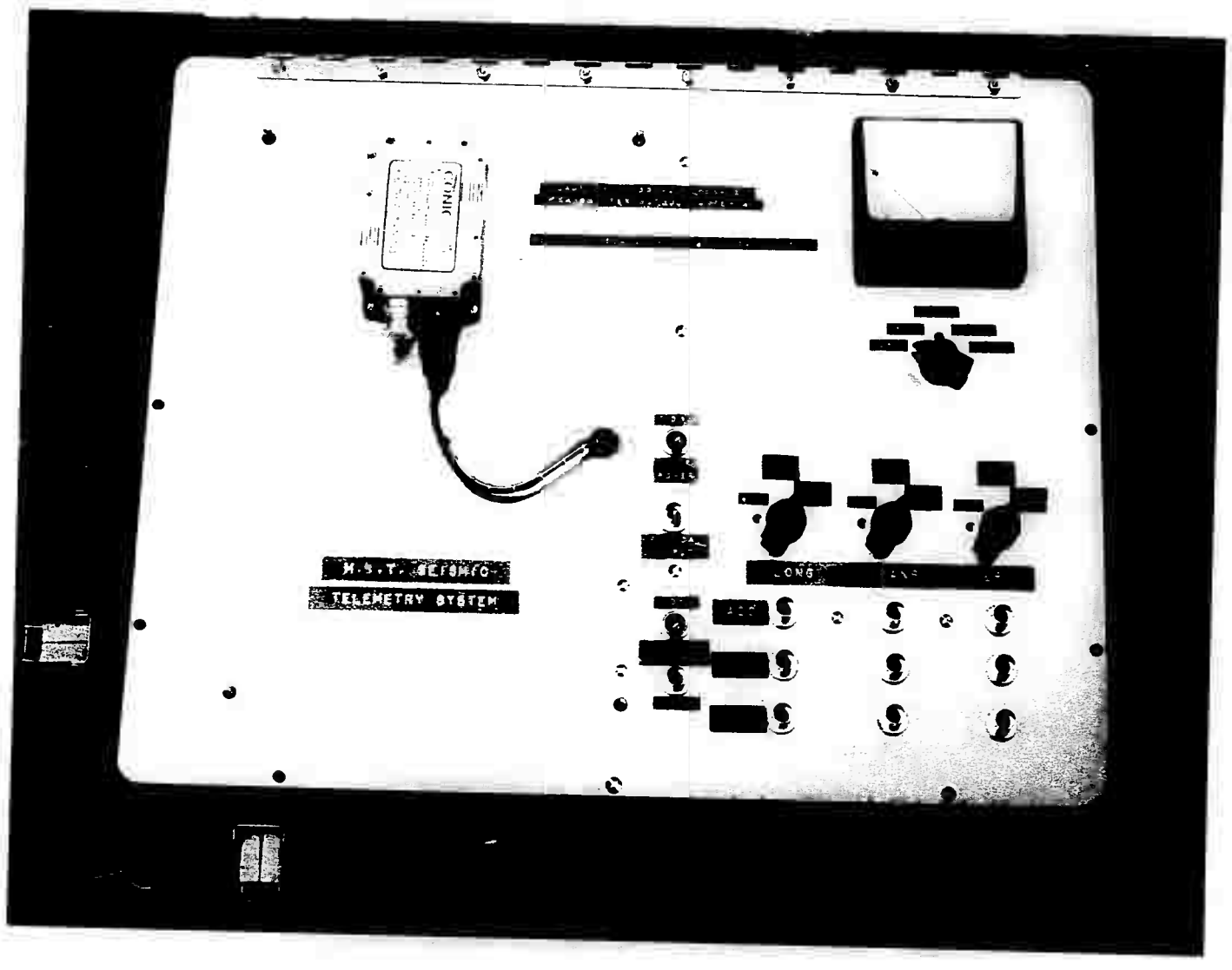

Figure 4. Remote Data Station Front Panel

Figure 5. Local Station Set-up

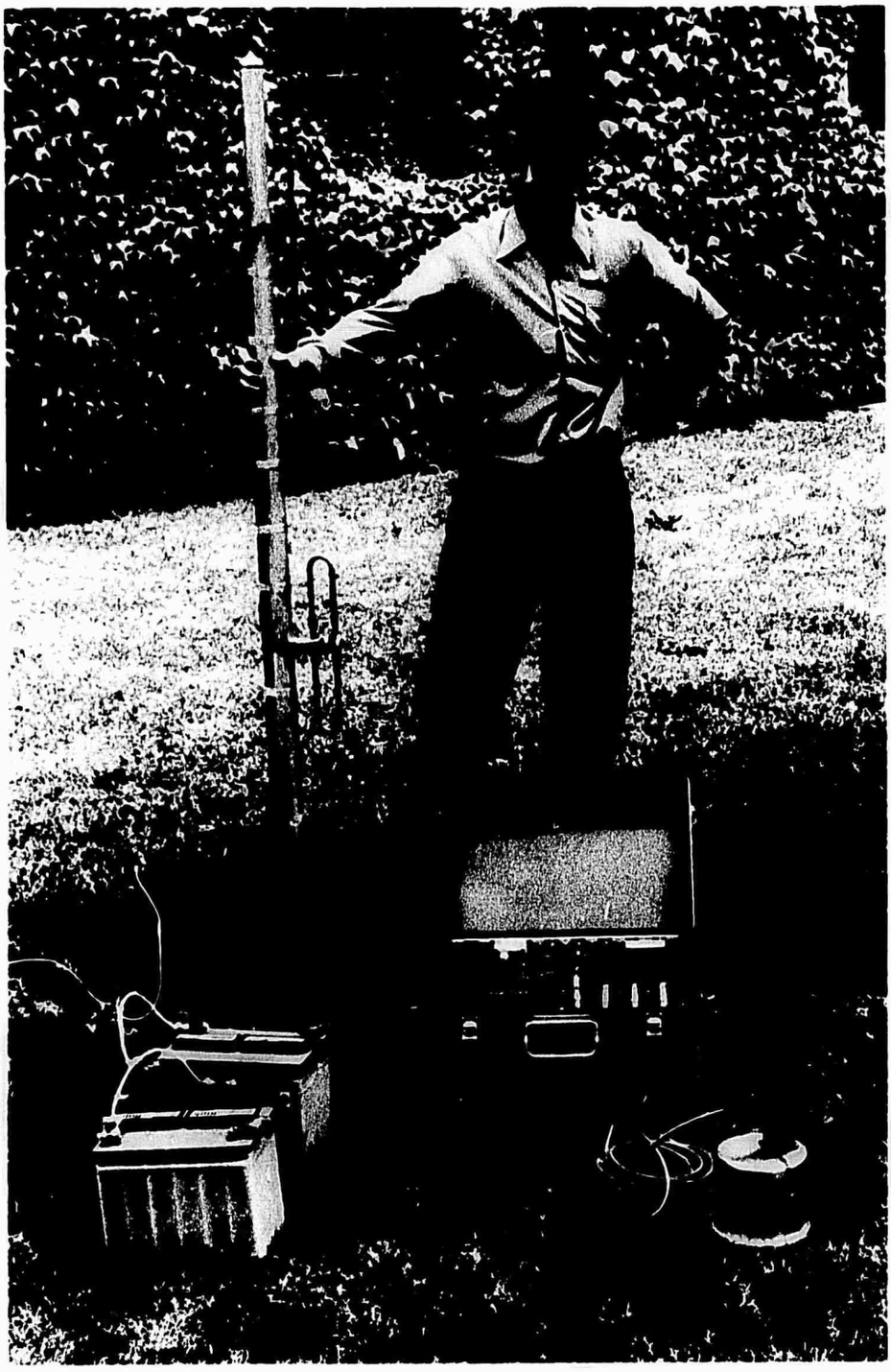

Figure 6. Remote Station Set-up

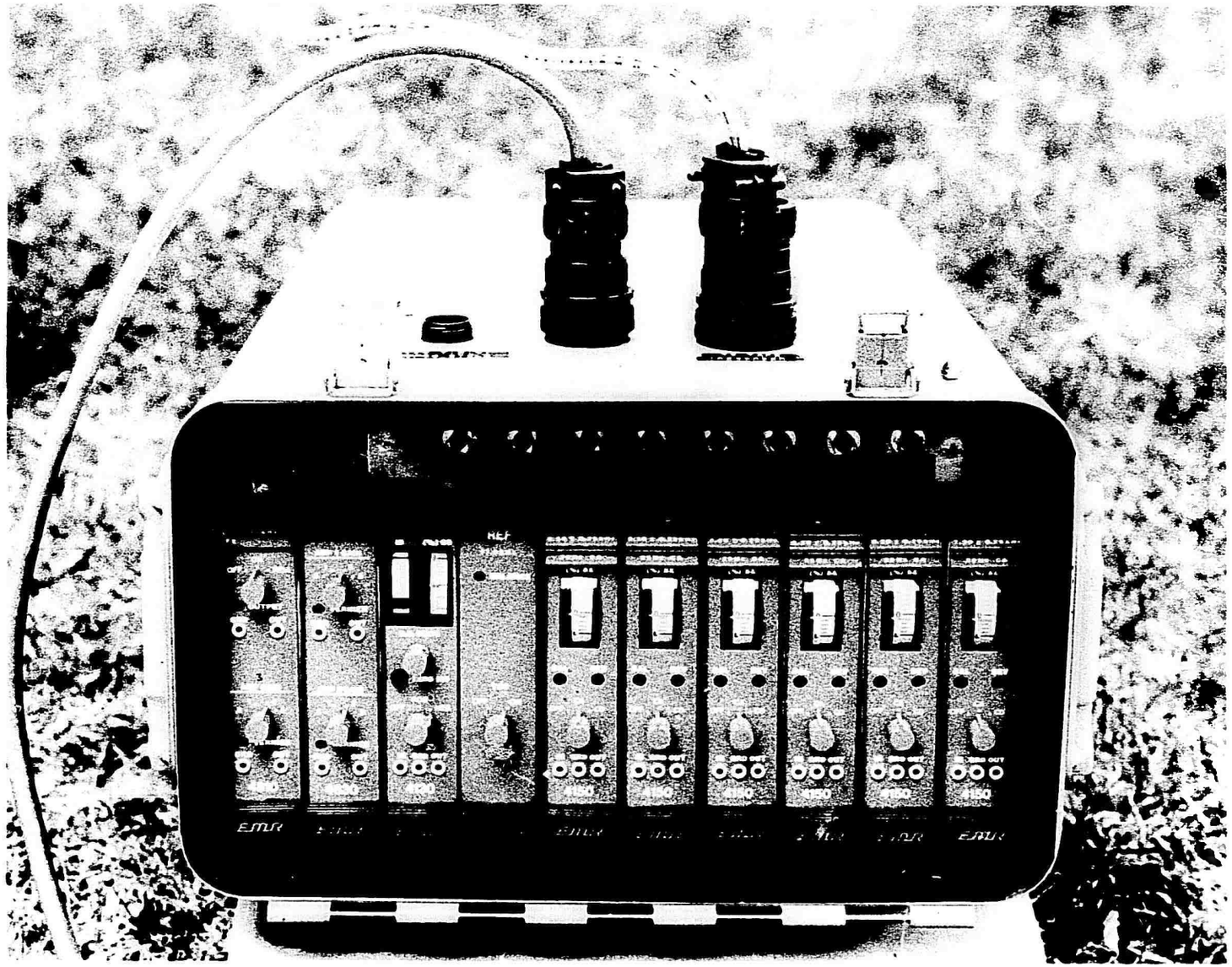

Figure 7. Recording and Discriminating Unit

Appendix I

Adjusting the Ampex FR-1300 Tape Recorder

A. FM Record/Reproduce System

In the Seismic Telemeter System, channels 4, 5, 6 and 7 are FM in the tape recorder. Channel 4 is used for the time mark generator. Channel 5 records the WWV receiver audio signal. Channels 6 and 7 have no use at this time. The method for adjusting the electronics cards is on pages FM-System-9 through FM-System-11 in the Operation and Maintenance Manual, ES-100 Signal Electronics. Instead of a counter, you could use a scope and precise sinewave generator like the GR Model 1161-A.

On May 3, 1971, these four FM channnels were adjusted as described below.

Channel	Amplifier Serial #	13.5 kc*	18.9 kc*	8.1 kc*
4	1S7676	-.001 v.	4.995 v.	-4.982 v.
5	1S7738	.001	0.999	-1.006
6	1S7763	.001	0.999	-0.966
7	1S7636	.001	1.000	-0.998

Reproduce Amplifiers

All the FM reproduce amplifiers are adjusted to be nominally the same. Full deviation produces 2 volts output. That is, inputs of 18.9 kc and 8.1 kc produce respectively outputs

*Shown below are input voltages which produce this frequency at TP3.

of +2 v. and -2 v.

B. Direct Record/Reproduce System

This method was suggested by Don Thomas of Ampex because it does not require a distortion meter and is supposed to be just as effective.

1. Output Level Adjustment

With the tape recorder power on, but with no tape running, connect the output of the reproduce card (output connector on top of machine) to the input of a band pass filter (Krohn-Hite 3100 or equivalent). Connect the filter output to the input of an RMS voltmeter (Hewlett-Packard 400E or equivalent). Set the filter limits to the passband limits given in the Ampex specs. (For 7 1/2 i.p.s. it is 50 cps to 38 kc.). Adjust the OUTPUT ADJUST on the card so that the RMS voltmeter shows the correct noise level according to the specifications for that speed (For 7 1/2 i.p.s., this level is -26 db. That is, referred to a 1 volt r.m.s. signal the noise should be -26 db or .05 volt r.m.s.).

2. Record Bias Level Adjustment

Using a stable sinewave generator, apply a signal (about .5 volt rms) to the direct record input. The frequency should be the highest frequency in the passband for the speed (that is, 38 kc at 7 1/2 i.p.s.). While the tape is recording and reproducing, observe the output of the corresponding direct reproduce amplifier as in step 1 above (filter, RMS

voltmeter). Adjust the BIAS LEVEL on the record amplifier for maximum amplitude of the reproduced signal. Do it slowly because of the delay involved in the tape. If the output level gets to be more than 1 volt rms during this procedure, lower the RECORD LEVEL adjustment a bit and return to maximize with the BIAS LEVEL adjustment.

3. Record Level Adjustment

Now set the sine wave generator to a frequency well inside the passband (e.g. 5 kc at 7 1/2 i.p.s.). You may want to set it to the frequency you'll be using the recorder at, if you know it. Adjust this signal to 1 volt rms exactly, and apply to input of direct record amp. With tape recording and reproducing as before, measure the reproduced signal level through the filter and RMS voltmeter as before. Adjust the RECORD LEVEL adjustment so that the reproduced signal amplitude is 1 volt rms.

Now the system should be adjusted properly. S/N ratio should be to spec and 1 volt input should give 1 volt output.

Appendix II

Cable Wiring

Contents:

Signal Routing - Data Stations

Power Supply Output Connector

Cable from Local Data Station to RDU

Cable from RDU to Tape Unit

Cable from Data Station to Accelerometer Package

Signal Routing - Data Stations

Component	Card #	Filter	VCO Channel	VCO Frequency	VCO Connector Pin
Longitudinal	3,6,9	A	1	2.3 kHz	11
		B	2	3.3 kHz	5
Transverse	2,5,8	A	3	4.3 kHz	10
		B	4	5.3 kHz	3
Vertical	1,4,7	A	5	6.3 kHz	12
		B	6	7.3 kHz	2

Power Supply Output Connector Block Wiring

Terminal	Use	Color Code
A	+15 V.	Red
B	Common	Black
C	-15 V.	Yellow
D	Pump	Shielded
E	Common	Black
F	+VR	Blue
G	Common	Black
H	+24 V.	Orange

Cable from Local Data Station to RDU

Pin	Use	Color Code
A	M1	Red
B	M1 Return	Black
C	M1 Shield	
D	M2	Yellow
E	M2 Return	Black
F	M2 Shield	
G	M3	Blue
H	M3 Return	Black
J	M3 Shield	
K	Time	Green
L	Time Return	Black
M	Time Shield	
N	Extra # 1	Brown
P	Extra # 1 Return	Black
R	Extra # 1 Shield	
S	Extra # 2	White
T	Extra # 2 Return	Black
U	Extra # 2 Shield	
V	NC	

Cable from RDU to Tape Unit

Pin	Use
A	T1 - Tape input # 1
B	Tape Output
C	
D	
E	
F	T2 - Tape input # 2
G	
H	Signal Ground
J	
K	
L	
M	
N	Timing channel tape output
P	T3 - Tape input # 3
R	WWV Channel output
S	Timing channel tape input

Cable from Data Station to Accelerometer Package

Pin	Use	Color Code
A	Long. power +15V	Black
B	Long. power -15V	Black
C	Long. common	Shield
D	Long. signal output	Yellow
E	Long. test input	Red
F	Trans. power +15V	Black
G	Trans. power -15V	Black
H	Trans. common	Shield
J	Trans. signal output	Green
K	Trans. test input	Brown
L	Vert. power +15V	Black
M	Vert. Power -15V	Black
N	Vert. common	Shield
P	Vert. signal output	Blue
Q	Vert. test input	White

Appendix III

Procedure for Setting VCO and MIXER AMP Levels

A. Remote Data Stations

1. Remove all VCO's from the chassis, but leave the MIXER AMP in place.
2. Put one of the VCO's back into its socket. Connect an RMS-voltmeter between the test point of the MIXER AMP and ground. With power on, adjust the LEVEL ADJUST SCREW (marked "L") on the VCO until the voltmeter reads 1.6 volts rms.
3. Remove the VCO from its socket, and put another VCO in its socket. Repeat step 2 for all six VCO's, being sure that only one at a time is plugged in.
4. Put all the VCO's into their proper sockets. Measure the voltage at test point of the MIXER AMP. It should be about 0.84 volt rms.
5. With the RMS-voltmeter, measure the voltage at the panel jack labeled "M1" for station 1 or "M2" for station 2. Adjust the LEVEL control (marked "L") on the MIXER AMP until this voltage is 0.06 volt rms, or until the greatest peak-to-ground voltage is 0.2 volt.

B. Local Data Station

Follow steps one through four above. Then procede as follows: With the RMS-voltmeter, measure the voltage at the panel

jack labelled "M3". Adjust the LEVEL control (marked "L") on the MIXER AMP until this voltage is 0.24 volt rms.

Appendix IV

R.F. Power Computation

The following computation shows that at the rated range of 10 miles, the r.f. link has a power safety margin of 29 db. Not included in the computation are transmission line mismatches and attenuation and propagation path attenuation. Hence, the safety margin will be smaller than 29 db.

Transmitter power (5 watts)	+35 dbm
Transmitting antenna gain	+ 6 db
Receiving antenna gain	+ 4 db
Free-space transmission loss over 10 miles	-109 db
Power delivered to receiver	- 64 dbm
Power needed at receiver for 20 db quieting	- 93 dbm
Power safety margin	29 db