AD726933

Laboratory Memorandum
LM-B2337-1

TECHNICAL REPORT

OUTPUT TESTS OF M42 PERCUSSION CAPS

PICATINNY ARSENAL
SCIENTIFIC AND TECHNICAL INFORMATION BRANCH

by

M. G. Kelly
R. G. Amicone

DISTRIBUTION STATEMENT A
Approved for public release;
Distribution Unlimited

April 1966

DDC
RECEIVED
JUL 26 1971
C

Prepared for

U.S. ARMY MUNITIONS COMMAND
PICATINNY ARSENAL
Ammunition Group
Dover, New Jersey
SMUPA-DR4

Contract No. DA-28-017-AMC-1915(A)

THE FRANKLIN INSTITUTE RESEARCH LABORATORIES -
Benjamin Franklin Parkway at 20th Street, Philadelphia, Pa. 19103

Reproduced by
NATIONAL TECHNICAL
INFORMATION SERVICE
Springfield, Va. 22151

NOTICE TO USERS

Portions of this document have been judged by the NTIS to be of poor reproduction quality and not fully legible. However, in an effort to make as much information as possible available to the public, the NTIS sells this document with the understanding that if the user is not satisfied, the document may be returned for refund.

If you return this document, please include this notice together with the IBM order card (label) to:

National Technical Information Service
U.S. Department of Commerce
Attn: 952.12
Springfield, Virginia 22151

THE FRANKLIN INSTITUTE • PHILADELPHIA 3, PA.

LABORATORIES FOR RESEARCH AND DEVELOPMENT

No. 27998

Commanding Officer
U.S. Army Munitions Command
Picatinny Arsenal
Dover, New Jersey
Attn: Mr. E. Miller, SMUPA-DR4

LM-B2337-1
UNCLASSIFIED
DA-20-017-ANC-1915(A)
April 1966
1 copy

Mailed: 4/18/66

Re: RECEIPT OF MATERIAL FOR SPONSORED PROJECT

Receipt of the material listed above is hereby acknowledged.

Original to be signed personally by the recipient and returned to sender.
Duplicate to be retained by the recipient addressed.
Triplicate by sender for suspense file.

_____ (DATE) _____ (SIGNATURE)

FORM 214A—7M—11/67

THE FRANKLIN INSTITUTE
RESEARCH LABORATORIES

THE BENJAMIN FRANKLIN PARKWAY • PHILADELPHIA, PENNSYLVANIA 19103 • TELEPHONE (215) 448-1000

April 15, 1966

Commanding Officer
U.S. Army Munitions Command
Picatinny Arsenal
Dover, New Jersey

Attention: Mr. E. Miller SMUPA-DR4

Subject : Output Studies of M42 Primer

Reference: Contract No. DA-28-017-AMC-1915(A)

Dear Sir:

1. Enclosed are the results of our output studies on the M42 primer which were made for Mr. Pelphrey. This material will also be summarized in our final report of the referenced contract.

2. The data indicates that there are significant differences between the output to be expected from the four mixes used in this primer. The output was found to be most violent (approaching detonation) with the PA101 mix. The WCC 358 lot delivered the most energy in a burning action. The output of Lot WCC 1-15 was similar to the latter but somewhat reduced in magnitude and possibly under tighter control. The output of Lot PA101 was very low with very little burning action. A better quantitative description of the relative rating of these lots is shown in Table 2.

3. It is interesting to note that the application of the UV/IR detector has enabled us to see very large differences in the behavior of these lots. These differences provide a means for making a selection of the various lots depending upon the nature of the output desired.

Very truly yours,

R. G. Amicone
Group Leader

cc: J. Pelphrey P.A.
D. Seeger P.A.
500 file via E.E. Hannum

B2337

Laboratory Memorandum
LM-B2337-1

Technical Report

OUTPUT TESTS OF M42 PERCUSSION CAPS

by

M. G. Kelly
R. G. Amicone

April 1966

Prepared for

U.S. ARMY MUNITIONS COMMAND
Picatinny Arsenal
Ammunition Group
Dover, New Jersey
SMUPA-DR4

Contract No. DA-28-017-AMC-1915(A)

THE FRANKLIN INSTITUTE RESEARCH LABORATORIES

BENJAMIN FRANKLIN PARKWAY AT 20TH STREET, PHILA. 3, PA.

FOREWORD

This study was performed under the general program Studies of Electric Initiators by the Applied Physics Laboratory, one of the Franklin Institute Research Laboratories under the sponsorship of the U.S. Army Munitions Command, Picatinny Arsenal, Ammunition Group, SMUPA-DR4, Dover, New Jersey, under Department of the Army Contract No. DA-28-017-AMC-1915(A).

Key personnel in the study are E. E. Hannum, Manager, Applied Physics Laboratory; R. G. Amicone, Group Leader; and M. G. Kelly, Project Leader. Contributors include B. Mackrell and H. T. Tucker.

The assistance of J. Pelphrey of Picatinny Arsenal is gratefully acknowledged.

3

Laboratory Memorandum LM-B2337-1
"Output Tests of M42 Percussion Primer"
M. G. Kelly, R. G. Amicone
April 1966
Contract No. DA-28-017-AMC-1915(A)
for Ammunition Group, Picatinny Arsenal
SMUPA-DR4
Army Munitions Command
48 pages including illustrations

J. R. Feldmeier
Director of Laboratories

ABSTRACT

The output characteristic of four different lots of M42 Percussion Caps have been studied with a high-speed, broad-band, two-color optical pyrometer (UV/IR Radiation Output Detector). The output characteristics studied were the relative energy history, the temperature history, relative brisance, and blast pattern. Lots WWC 358 and WWC 1-15 exhibited low brisance, long, sustained, burning activity, and coruscation in the output. Lot PA-101 exhibited high brisance, little burning, and no coruscation. Lot 100 exhibited low brisance, little burning and no coruscation. The burning temperature of all four lots was in the range of 2500° to 2700° Kelvin.

4

TABLE OF CONTENTS

Page

FOREWORD i

ABSTRACT ii

1. INTRODUCTION 1

2. OUTPUT PARAMETERS STUDIED 2

2.1 Energy History of Output 2

2.1.1 Initial Burst Period 2
2.1.2 Induction Period 2
2.1.3 Burning Period 3
2.1.4 Energy History Summary 3

2.2 Approximate Temperature History 3
2.3 Brisance 4

3. SUMMARY AND CONCLUSIONS ACCORDING TO LOT 5

3.1 Lot WWC 358 5
3.2 Lot WWC 1-15 5
3.3 Lot PA-101 5
3.4 Lot 100 6
3.5 General Conclusions 6

Appendix A - Theory and Construction of UV/IR Radiation Output Detector . . . . . A

Appendix B - Additional Data on M42 Primers as Supplied by J. Pelphrey . . . . . B

5

LIST OF FIGURES

Figure No.	
1	Drop Tester and Detector Arrangement
2	Firing Pin
3.	Centering Fixture
4	Typical Initiation Output Trace for M42 Percussion Cap
5	Typical Output Trace for M2 Percussion Cap Showing Delay Period
6	Energy History M42 Cap a) Lot WWC 358 b) Lot WWC 1-15 c) Lot PA 101 d) Lot 110
7	Energy History of M42 Cap Output (Summary)
8	Dual Traces (UV & IR) Used for Temperature Measurements
9	Temperature History of M42 Percussion Cap
10a,b,c	Blast Patterns from Lot WWC 358
11a,b,c	Blast Patterns from Lot WWC 1-15

OUTPUT TESTS M42 PERCUSSION CAPS

1. INTRODUCTION

Under the sponsorship of Picatinny Arsenal the Franklin Institute Research Laboratories have developed an electropyrometric device which may be used to evaluate the output of detonating devices such as blasting caps and fuze trains as well as deflagrating devices such as squibs, primers and igniters. This device, called an Ultraviolet/Infrared Radiation Output Detector, has been used to discern qualitative and quantitative differences in the outputs of four different lots of M42 Percussion Caps.

Briefly, the UV (ultraviolet)/IR (infrared) Radiation Output Detector consists of two broadband, high speed photomultipliers each of which exhibits spectral sensitivity in a different portion of the spectrum. The photomultipliers are directed to sense the output radiation and the resulting voltage signal from each photomultiplier is recorded on an oscillograph as a function of time. Since the spectral distribution of any light source is dependent upon its temperature and energy output these, and other related parameters, can be studied by properly evaluating the oscillographic data produced by the two photomultipliers. The construction and the theory of the UV/IR Radiation Output Detector are discussed in detail in Appendix A of this report.

The actual arrangement of the drop tester and UV/IR Radiation Output Detector is shown in Figure 1. A 3.5 ounce steel ball was used at a drop height of 7.5 inches giving an impact energy of 26.5 inch-ounces. This impact energy is more than enough to insure the firing of all four lots of percussion caps. The all-fire data supplied by J. Pelphrey of Picatinny Arsenal are given in Table 1B of Appendix B for each lot of M42 Percussion Caps. Figure 2 shows the details of the firing pin which was used and Figure 3 shows the details of the centering fixture. Note that the output end of the percussion cap is almost completely unobstructed. Thus, the UV/IR detector is able to view as much of the output flame as possible. Since the radiation level from some of the percussion caps was low, a 3.5 inch distance between the cap and detector was necessary to insure sufficient radiation detection.

2. OUTPUT PARAMETERS STUDIED

The output parameters which were specifically studied were the energy history, approximate temperature history, and brisance. From these parameters others may be derived but these, especially, are of major interest.

2.1 Energy History of Output

Since the output of the percussion caps is relatively "soft" and the shock output low, most of the energy output can be accounted for by observing the intensity of the emitted radiation. Furthermore, the temperature of output flame and subsequent radiation is low relative to detonation phenomena. For these reasons the energy history of the M42 percussion caps was observed using only the infrared photomultiplier (an RCA 7102). Three distinct types of phenomena were observed in the output of the percussion caps.

2.1.1 Initial Burst Period

There was observed in all the lots an initial burst period starting at the first trace of output radiation and lasting for 300 to 900 microseconds. In most cases the radiation shows a rapid rise and a gradual decay. The short duration of this radiation suggests a transient type of initiation. Although the exact mechanism of the initiation is not known the action of the firing pin compressing the percussion mixture against the anvil is a reasonable setting for hot spot initiation. Figure 4 shows a typical oscillograph produced by the initial burst radiation.

2.1.2 Induction Period

In the case of lot WWC 358 and WWC 1-15 there was observed a period of little or no radiation output (relative to the initiation radiation). On an average this period of low radiation output started at 500 microseconds and lasted for 1000 microseconds. Figure 5 illustrates this phenomena. It is probable that during this period the percussion mixture is undergoing further initiation. The initial flash of the type seen in Figure 4 may be a very local initiation of the mix and the percussion mix itself may not encourage further rapid initiation. Instead, the initial flash may induce the surrounding mixture

to start chemical reaction at a very low level until full-fledged burning can occur. Thus, the delay period may be more aptly called an induction period.

2.1.3 Burning Period

The third phenomena to be observed with IR radiation detector was a period of burning. The long irregular radiation plateau identifies the observed phenomena as burning. The burning period is shown in part in Figure 5 and usually lasts from 1.5 to 100 milliseconds depending upon the lot. All four lots of percussion caps exhibit some burning after the initial burst or induction period.

2.1.4 Energy History Summary

The energy or activity history of each of the four lots of M42 percussion caps is summarized graphically in Figures 6A through 6D. Data from 5 to 10 firings in each lot of caps were averaged so that each curve represents the energy history of an average item from the particular lot. The initial burst, induction, and burning times as well as the relative intensity of each of these phenomena is shown on these curves. The same data are summarized in bar-graph form in Figure 7. In general the range of variation in the durations and intensities shown as an average in Figures 6 and 7 is ± 60% for Lots WWC 358 and WWC 1-15 and about ± 20% for Lots PA-101 and 110.

2.2 Approximate Temperature History

For temperature measurements both the infrared and ultraviolet photomultipliers are used and a dual trace oscillograph of the type shown in Figure 8 is obtained. As discussed in Appendix A the temperature of the source may be estimated with a ratio of UV to IR radiation intensity if the source radiation is blackbody or greybody in nature. Due to the composition of some of the percussion mixes the emitted radiation may not completely fulfill these conditions so that the temperature history presented in Figure 9 should be called approximate in lieu of further investigations. The temperature-time curves for each lot are average values for the particular lot. The temperature range of 2000° to 2700° Kelvin seems to be reasonable for a soft output device such as a percussion cap.

2.3 Brisance

When speaking of "soft" output devices such as the M42G percussion cap the term brisance is almost without meaning since the term is a properly identified with the detonation pressure. Since there is some violent action associated with the M42G caps, however, we have tried to make some estimate of the relative brisance or "shattering action" of each lot.

The estimate was made by measuring maximum rate of rise of the oscillograph traces produced by the initial burst radiation. Figure 4 shows such an oscillograph and Section 2.1.1 of this report discusses this type of radiation. A fast rate of rise in relation to a slower one indicates more brisance. Table 1 lists the average of the maximum measured rise rates for each lot. The actual voltage rise rate as measured on the oscillograph as well as an estimate of the maximum radiant watts per second is given. The latter factor was computed by assuming a 510 ohm load across the RCA 7102 photomultiplier output and an average radiant sensitivity of 4 milliwatts/ampere.

Table 1

MAXIMUM RATE OF RADIATION INCREASE OF FOUR LOTS OF M42 PERCUSSION PRIMERS

Lot No.	Maximum Voltage Rate of Rise (volts/millisecond)	Rate of Increase of Radiated Power (watts/second)
110	.18	.0014
WWC 1-15	4.	.032
WWC 358	10.	.079
PA-101	800.	6.3

If we allow the equation of these rise times with brisance it is obvious that Lot PA-101 has the greatest brisance. This is verified in practice since the cup itself is destroyed when the item is fired. The cups of the other three lots remain intact. Audibly, the ranking of the lots corresponds to that of Table 1. Lot 110 produces the least "snap" whereas lot PA-101 sounds like a miniature detonator.

3. SUMMARY AND CONCLUSIONS ACCORDING TO LOT

3.1 Lot WWC 358

This lot has the longest burning time of the four lots. It also shows the greatest variability in output. Burning times as low as 65 milliseconds and as high as 250 milliseconds have been observed. To gain some information as to the output pattern, a 7 inch square piece of white poster board was placed beneath the centering fixture at a distance of 3.5 inches. The percussion cap was fired and any solid material or burning of the card was noted. Figures 10A, B and C are copies of cards used to test three different lots of WWC 358 percussion caps. A quantity of blast material has adherred to the card thus indicating that there is hot solid material expelled from the caps (coruscation). The variability between the three figures (10A, B and C) gives some indication of the variability in output of which we spoke earlier.

3.2 Lot WWC 1-15

Since the percussion mix of this lot is similar to that of lot WWC 358 we expect and, indeed, find that its output is similar to the WWC 358 caps (see Appendix B Table 2B). The energy history of both lots is similar and both lots reach a steady burning temperature of 2500° Kelvin. Figures 11A, B and C show blast patterns for three caps from this lot. Typically, there is more coruscation from WWC 1-15 items but the patterns seem more confined and reproducible than those of lot WWC 358.

3.3 Lot PA-101

The high rate of radiation emission (see Table 1) from this lot indicates that there is a tendency towards detonation. We note in Figure 9 that the temperature rises to its maximum value of 2660° Kelvin more rapidly than the other three lots. Also noteworthy is the extremely intense initiation radiation seen in Figure 6C. The other three lots show relative initiation intensities of only 5 or 10 while the PA-101 lot goes up to 400. This high intensity may be

11

due in part to the aluminum content in the percussion mix since we have seen, in our experience, a brightening of detonator radiation due to aluminum. There is also the possibility of partial shock ionization of the air in this case.

The lead styphnate contained in the mix is probably the largest contributing factor to the high brisance and the explosive nature of the output reaction accounts for the low-level, short duration burning in this lot. The output of this lot would be good for initiating other explosives which require mild shock and medium-high temperatures.

When a white card was placed under the PA-101 percussion caps only a small amount of loose powdery material was deposited. The material did not adhere to the cards indicating that the particles were small and probably cool by the time they reached the card.

3.4 Lot 110

This lot has the least brisance and shortest burning time of any of the four lots of M42C percussion caps. Even though its percussion mixture is similar to that of the PA-101 (see Appendix B, Table 2B) the lead styphnate is apparently diluted to the point where it will not exhibit a detonation-like output. The maximum temperature reached by this lot is the lowest at 2520° Kelvin and the white card test shows about the same quantity of loose, powdery material as the PA-101 lot.

3.5 General Conclusions

Final conclusions about these four lots of M42 percussion caps should be influenced partly by the exact intended use of the caps. Lacking this information we must generalize. Enough data has been collected with the aid of the UV/IR Radiation Output Detector to define both the apparent and subtle differences between the four lots. In general the output of Lots WWC 358 and 1-15 seem to be predominately burning in nature while the outputs of Lots PA-101 and 110 show little burning and a tendency towards detonation. One could, therefore, select a lot to perform a "soft" or a "hard" initiation task. Table 2 summarizes all tests on the M42 percussion caps on a relative basis.

Table 2

RELATIVE RATING OF FOUR LOTS OF M42 PERCUSSION CAPS

	Energy evolved in initial burst (in less than 1 msec)		Energy evolved in burning		Relative Amount of Coruscating Particles
Lot No.	Relative Peak	Brisance Interpretation	Relative Magnitude	Duration Interpret. (msec)	
110	2	small	.1 (negligible)	1 negligible	none
WWC 1-15	10	small	2 (medium)	35 medium	Medium Regular Pattern
WWC 358	6	small	3 (large)	110 long	Medium Irregular Pattern
PA-101	400	large	.2 (negligible)	4.5 short	none

12

COMPUTED BY	DATE	THE FRANKLIN INSTITUTE *Laboratories for Research and Development* PHILADELPHIA 3, PA.	PAGE Figure 2
CHECKED BY	DATE		PROJECT

TITLE Drop Tester And Detector Arrangement

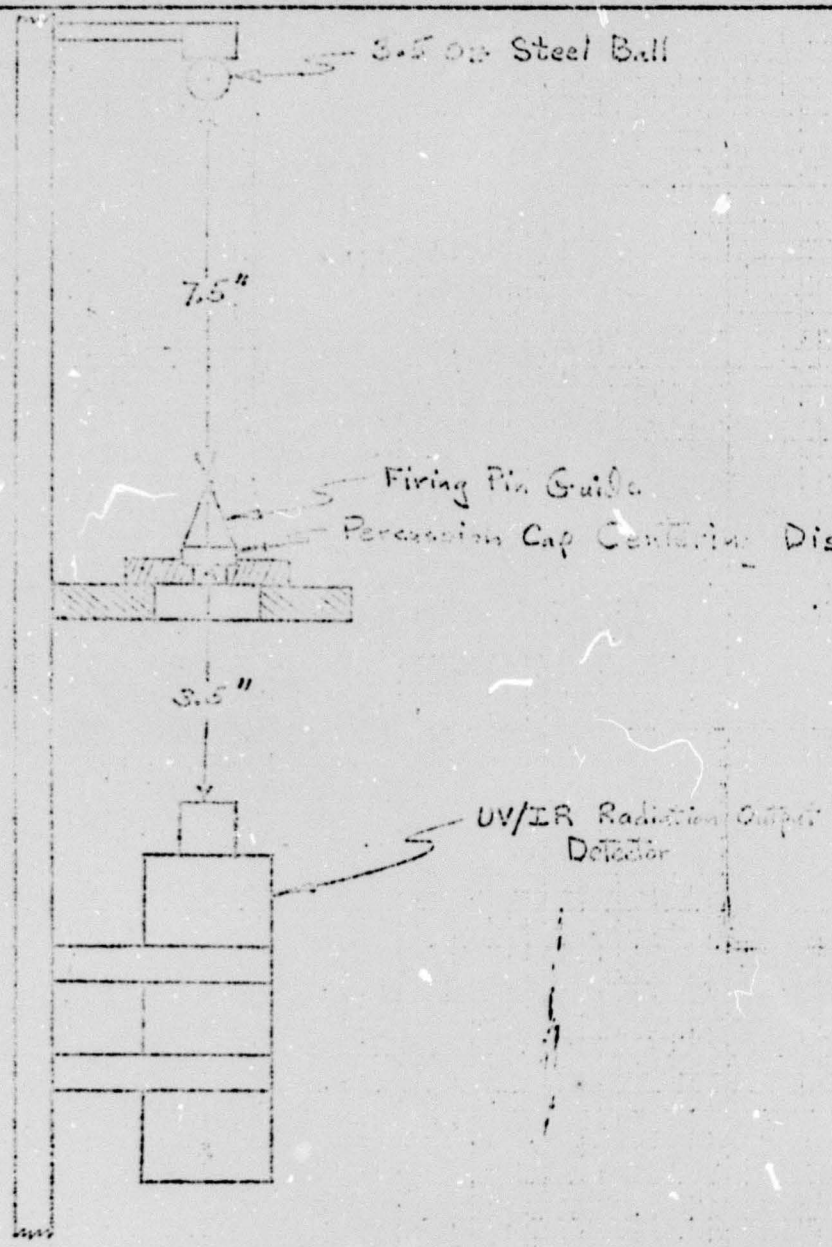

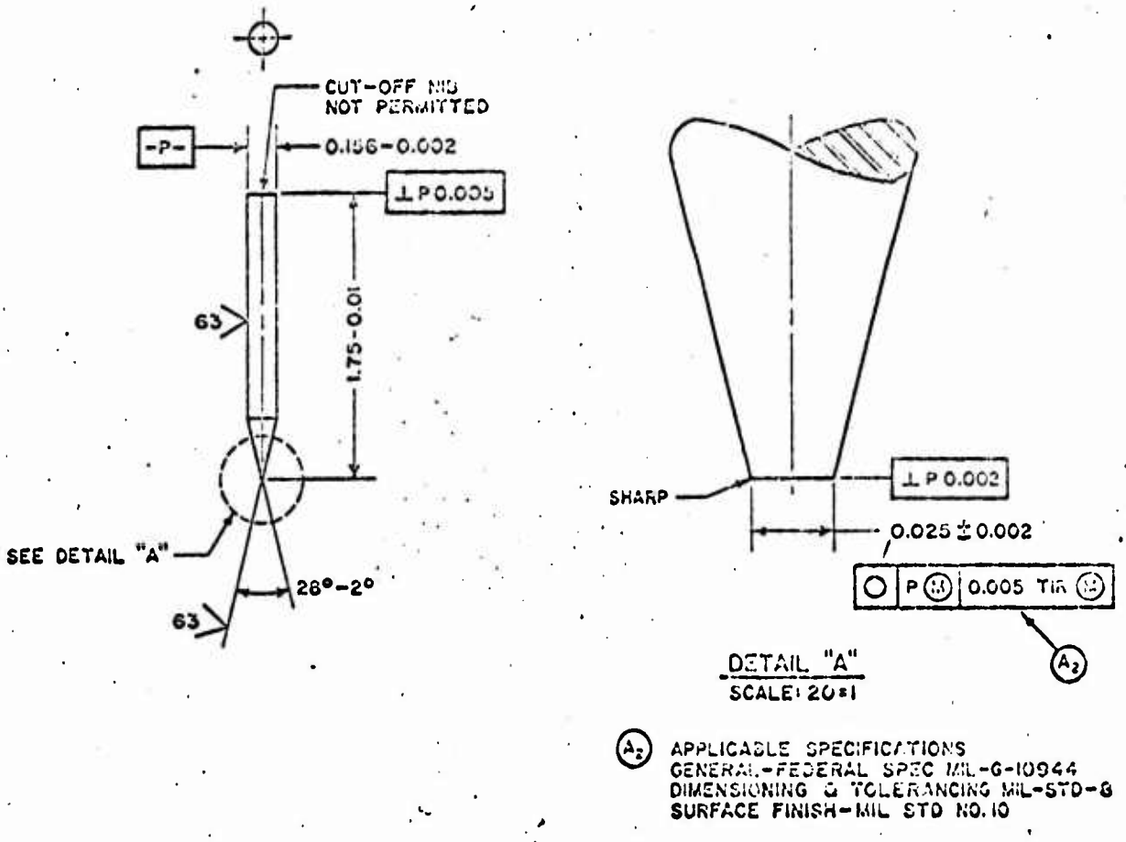

FIG. 2 FIRING PIN

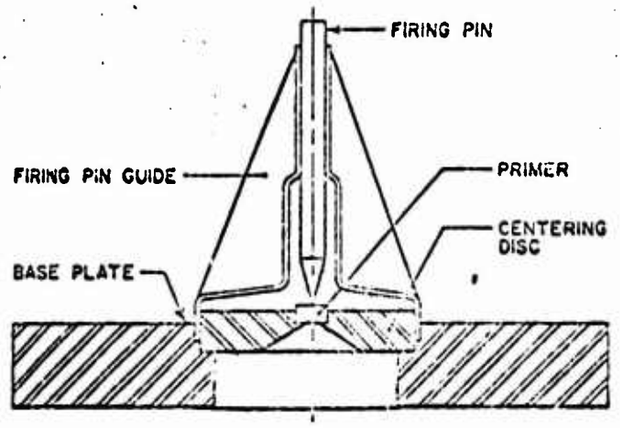

FIG. 3 CENTERING FIXTURE

Sweep time = 50 micro seconds/div

Deflection Sensitivity = .05 volts/div

Base line is 1 division from bottom of picture.

Figure 4 Typical Initiation Output Trace for M42 Percussion Cap

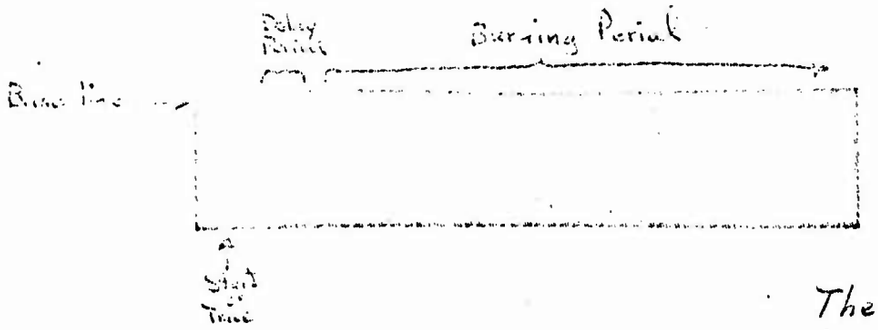

Sweep Time = 1 millisecond/div

Deflection Sensitivity = .05 volts

The deflection in this picture is negative and the base line is as noted.

Figure 5 Typical Output Trace for M42 Percussion Cap Showing Delay Period

K&E LOGARITHMIC 46 7520
3 X 5 CYCLES MADE IN U.S.A.
KEUFFEL & ESSER CO.

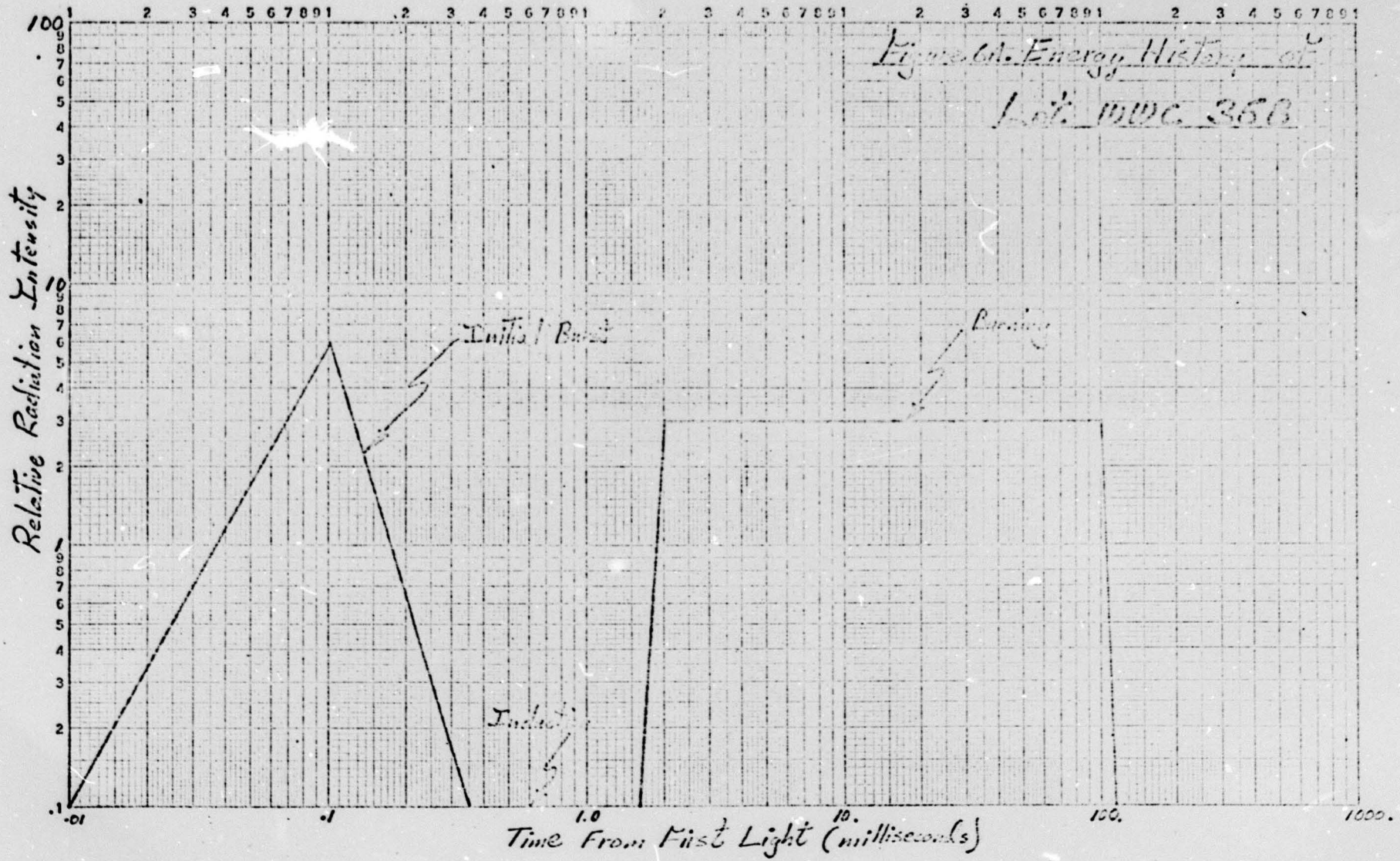

K&E LOGARITHMIC 46 7520
3 X 5 CYCLES MADE IN U.S.A.
KEUFFEL & ESSER CO.

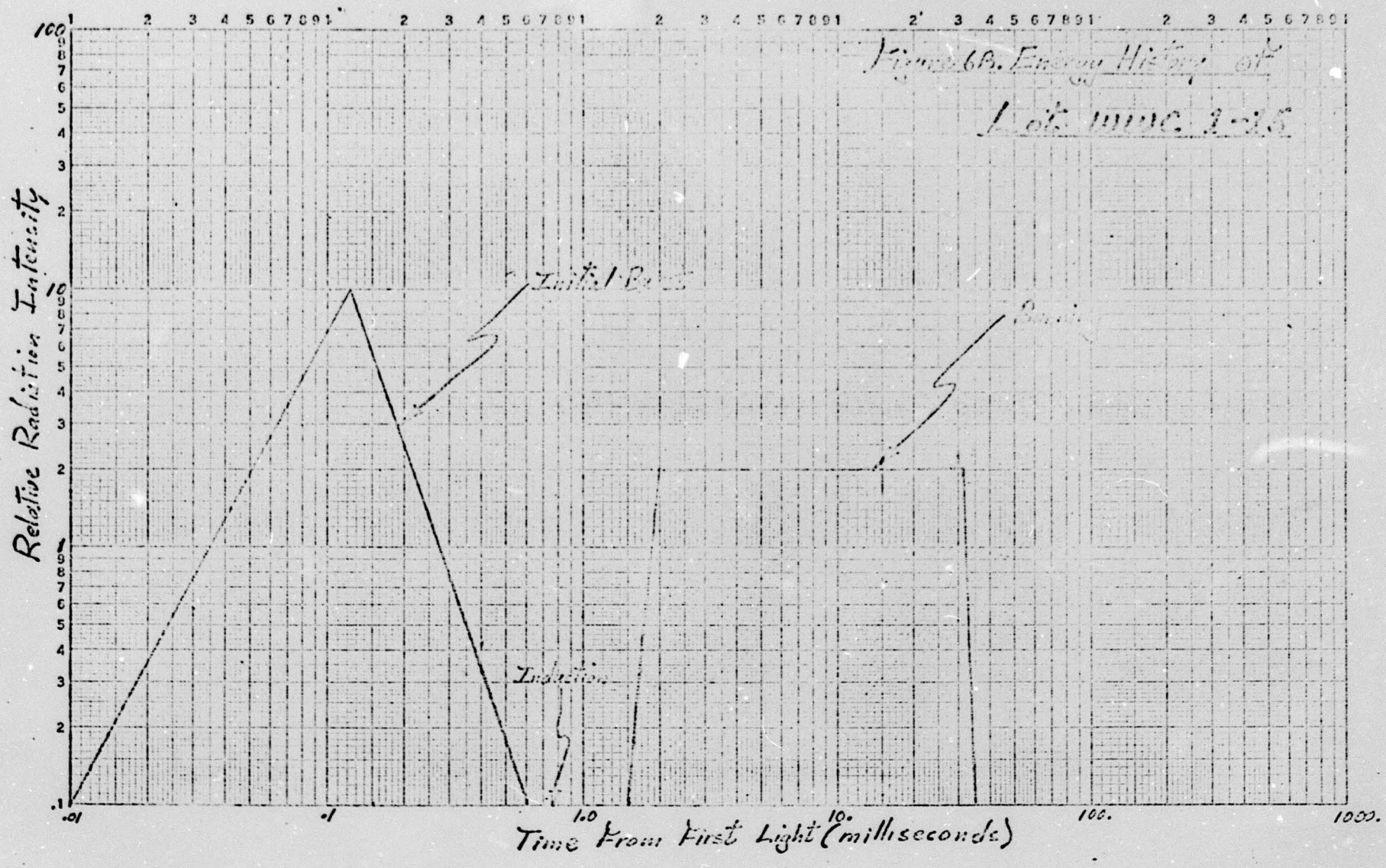

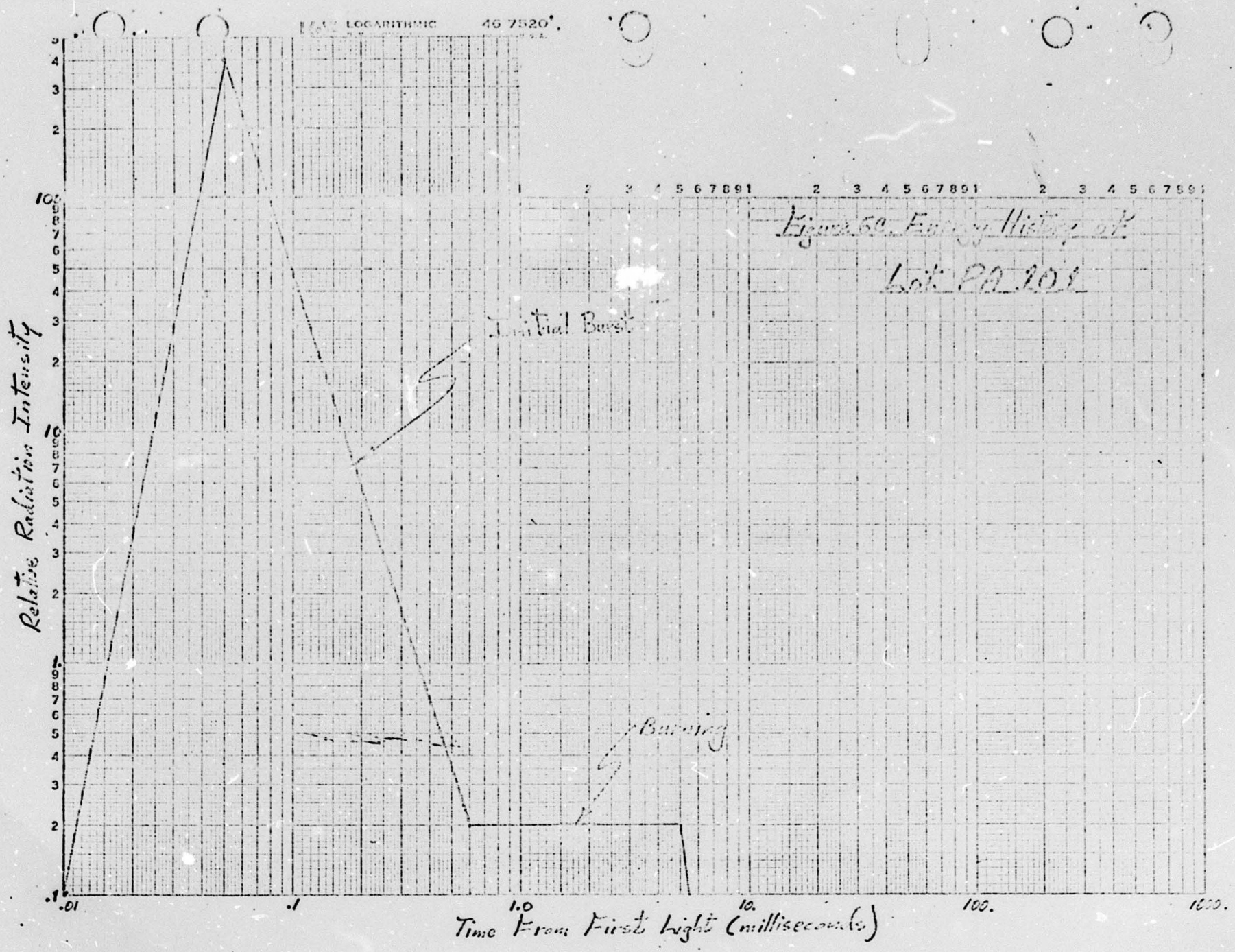
LOGARITHMIC 46 7520
Figure 6a Energy History of
Lot PA 101
Initial Burst
Burning
Relative Radiation Intensity
Time From First Light (milliseconds)
.01
.1
1.0
10.
100.
1000.

LOGARITHMIC 46 7520
3 X 5 CYCLES MADE IN U.S.A.
KEUFFEL & ESSER CO.

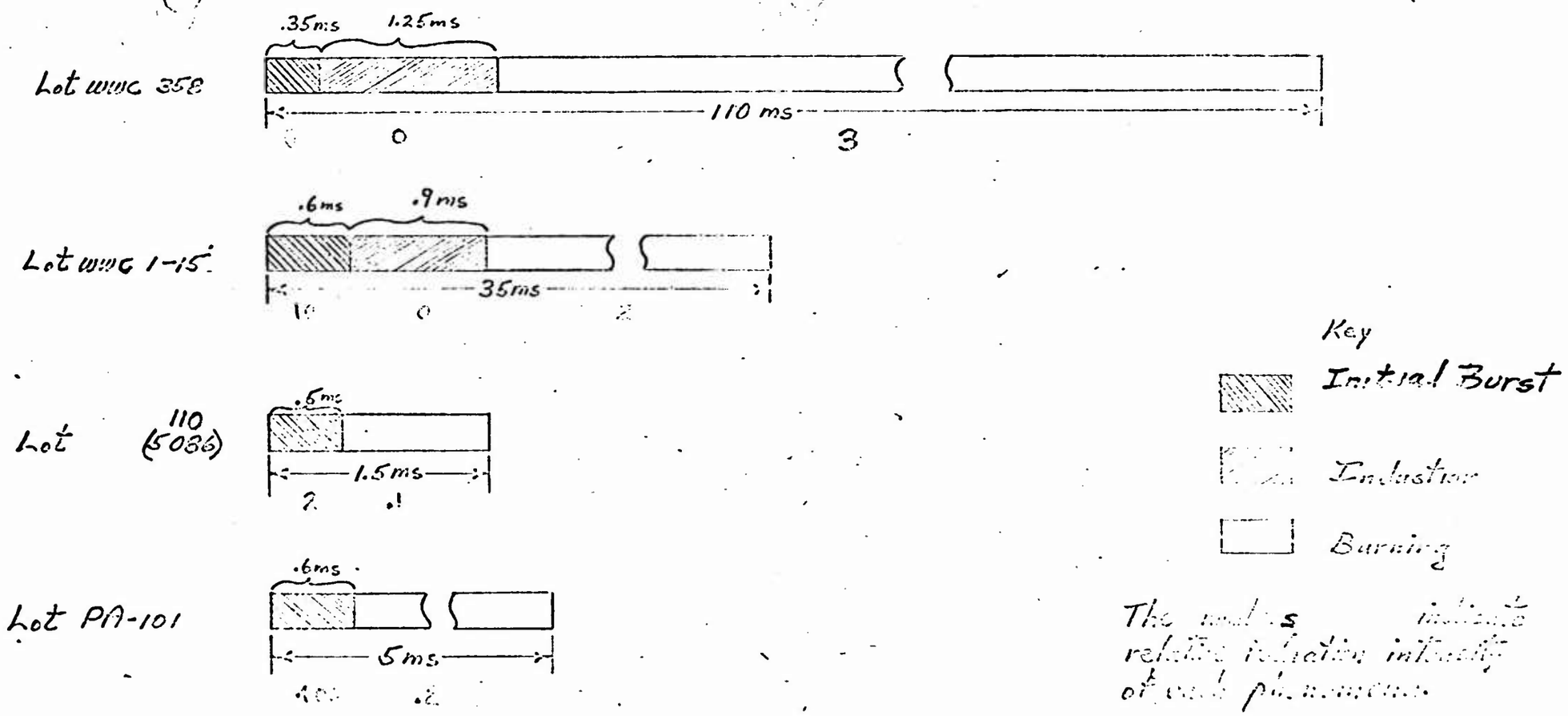

Figure 7 Energy History of M42 Pyrotechnic Cap Output (Summary)

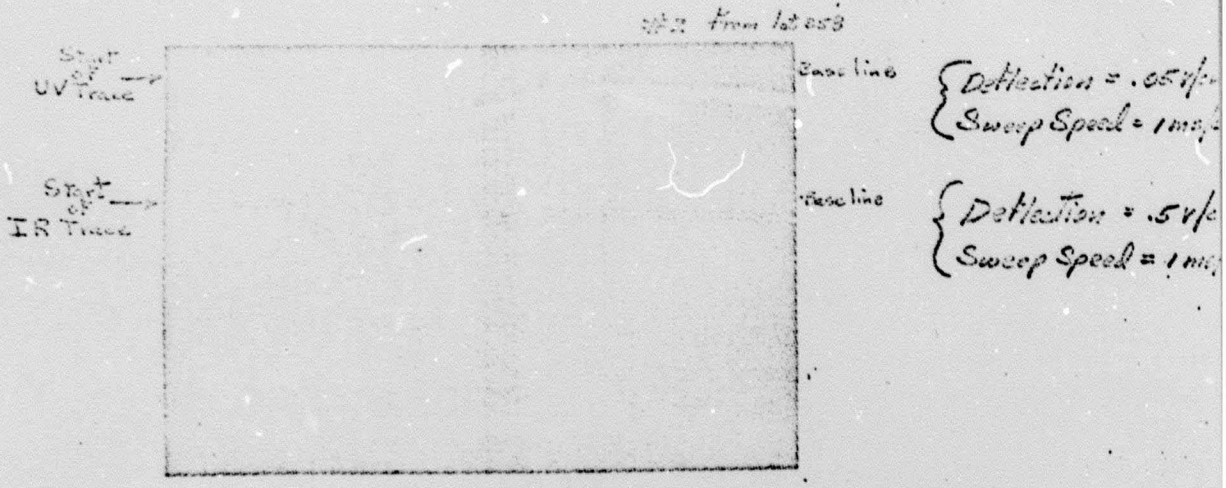

Figure 8 Dual Traces (UV and IR) Used For Temperature Measurements

SEMI-LOGARITHMIC 46 5493
3 CYCLES X 70 DIVISIONS MADE IN U.S.A.
KEUFFEL & ESSER CO.

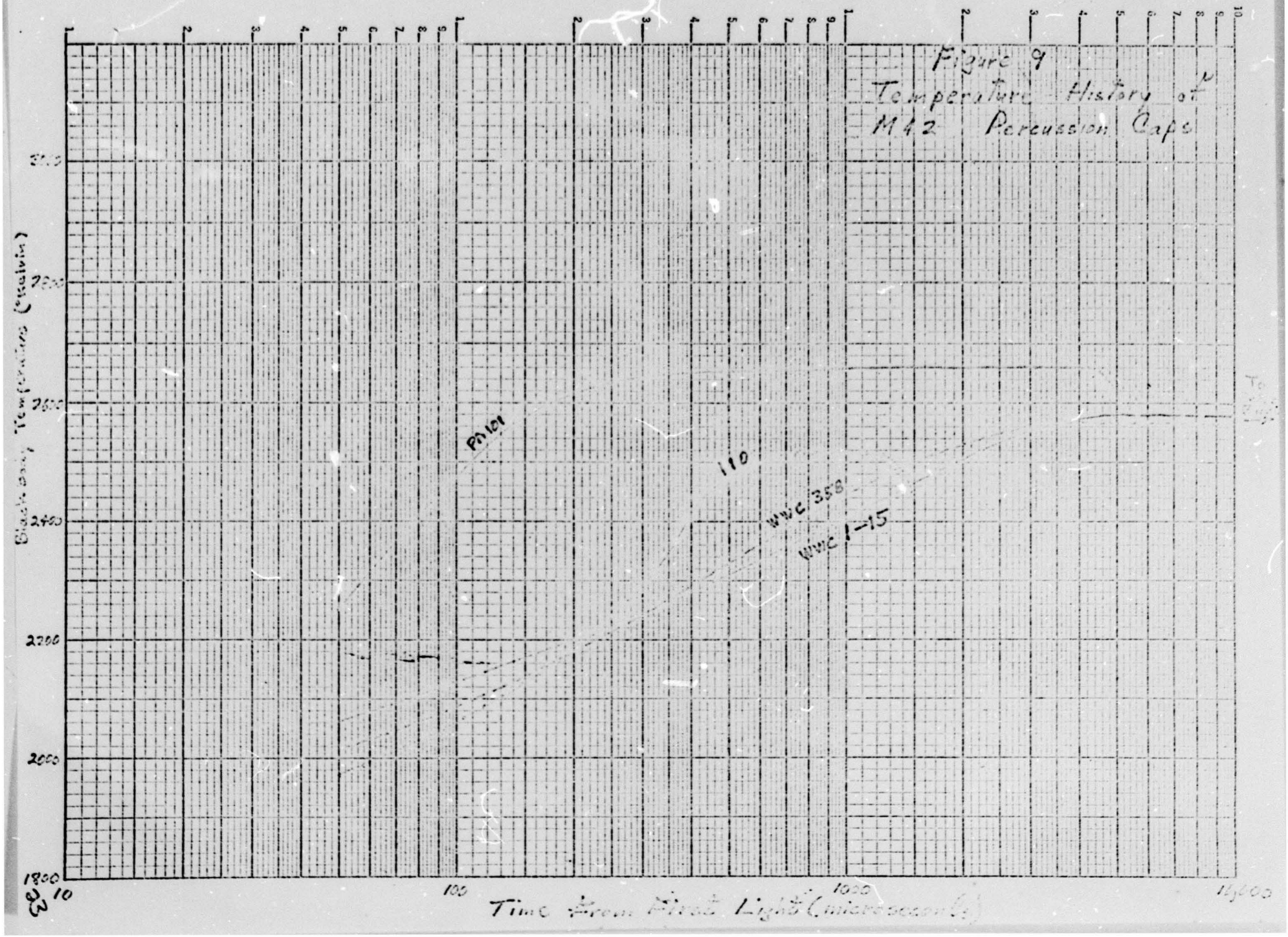

Figure 10A
Blast Pattern From Lot WWC 358

Figure 10B
Blast Pattern from hol WNC358

Figure 10C
Blast Pattern from Lot WWC 358

Figure 11A
Blast Pattern From Lot WWC 1-15

Figure 11B
Blast Pattern from Lot WWC1-15

Figure 11C
Blast Pattern From Lot WWS 1-15

APPENDIX A
THEORY AND CONSTRUCTION
OF
UV/IR RADIATION OUTPUT DETECTOR

30

1. CONSTRUCTION OF DETECTOR

Our output detector consists of two photomultipliers which measure the ratio of the intensity of a broad band of light in the ultraviolet region of the spectrum to the intensity of a broad band of light in the infrared region of the spectrum. The ultraviolet photomultiplier is an RCA 1P28 and the infrared photomultiplier is an RCA 7102. The typical relative responses of these photomultipliers as used in the output detector are shown together in Figure A1. Figure A2 shows the physical layout of the photomultipliers. At the top of the picture we have the output detector housing. At left, center we see the 1P28 along with its dynode divider resistors. At right, center is the 7102 which receives the light through the head of its envelope. At the bottom, left is the input filter cell housing which holds protective sapphire windows, diffusers, and "gray" filters. At bottom, right we have the beam splitter which divides the incoming light between the 1P28 and 7102. Both photomultipliers are shockmounted and the assembled detector is shown in Figure A3. Figure A4 shows the detector on its tripod (a heavier housing for the 1P28, is shown in this Figure).

Figure A5 is a simplified block diagram of the entire detector system. The power supplies are conventional and produce a variable voltage of from 0 to 1200 volts at 200 milliamperes. The dynode voltage dividers are non-inductive and external to the output detector housing to prevent temperature problems (a modification not shown in Figure A2).

The oscilloscope used is a dual beam Tektronix 551. Presently, the ratio of UV (Ultraviolet) to IR (Infrared) photomultiplier outputs is taken by first obtaining a set of traces from the device to be studied (see typical traces in the body of this report) and then graphically obtaining the UV/IR ratio as a function of time by using dividers. This is time consuming but in these early stages automation of these calculations is unnecessary.

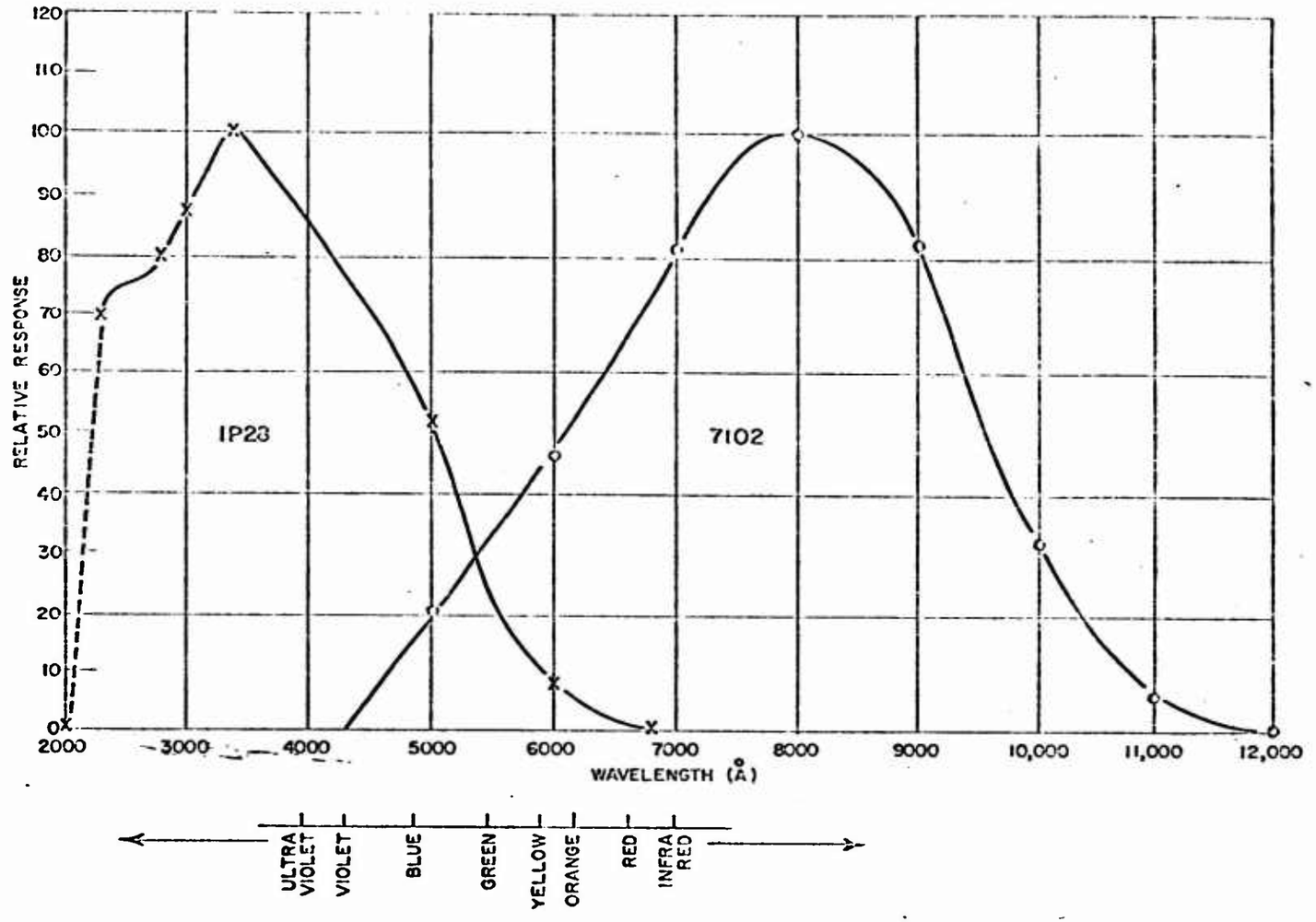

FIG. A-1. TYPICAL RELATIVE RESPONSE OF OUTPUT DETECTOR

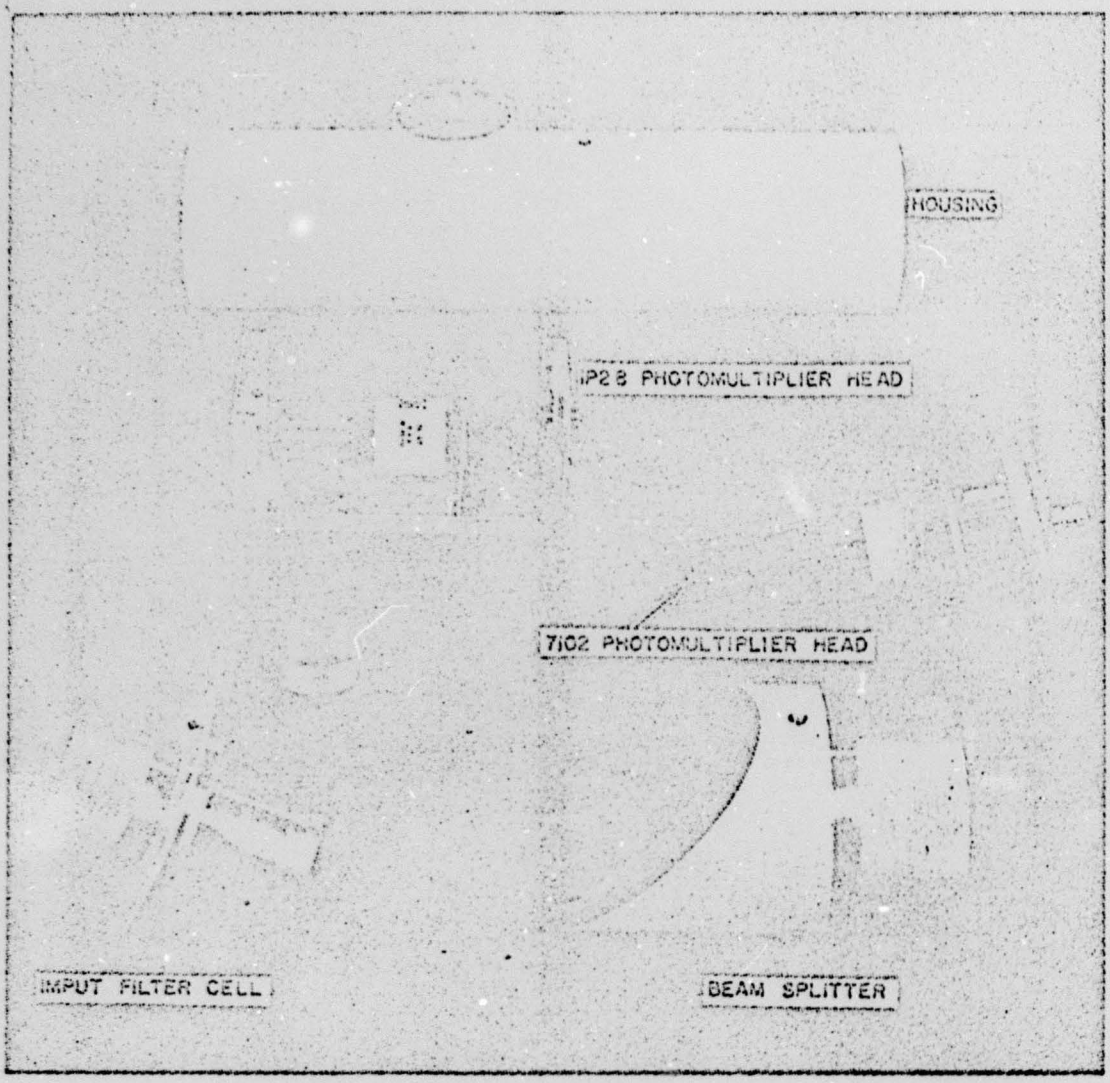

FIG. A-2. OUTPUT DETECTOR, DISASSEMBLED

FIG. A-3. OUTPUT DETECTOR, ASSEMBLED

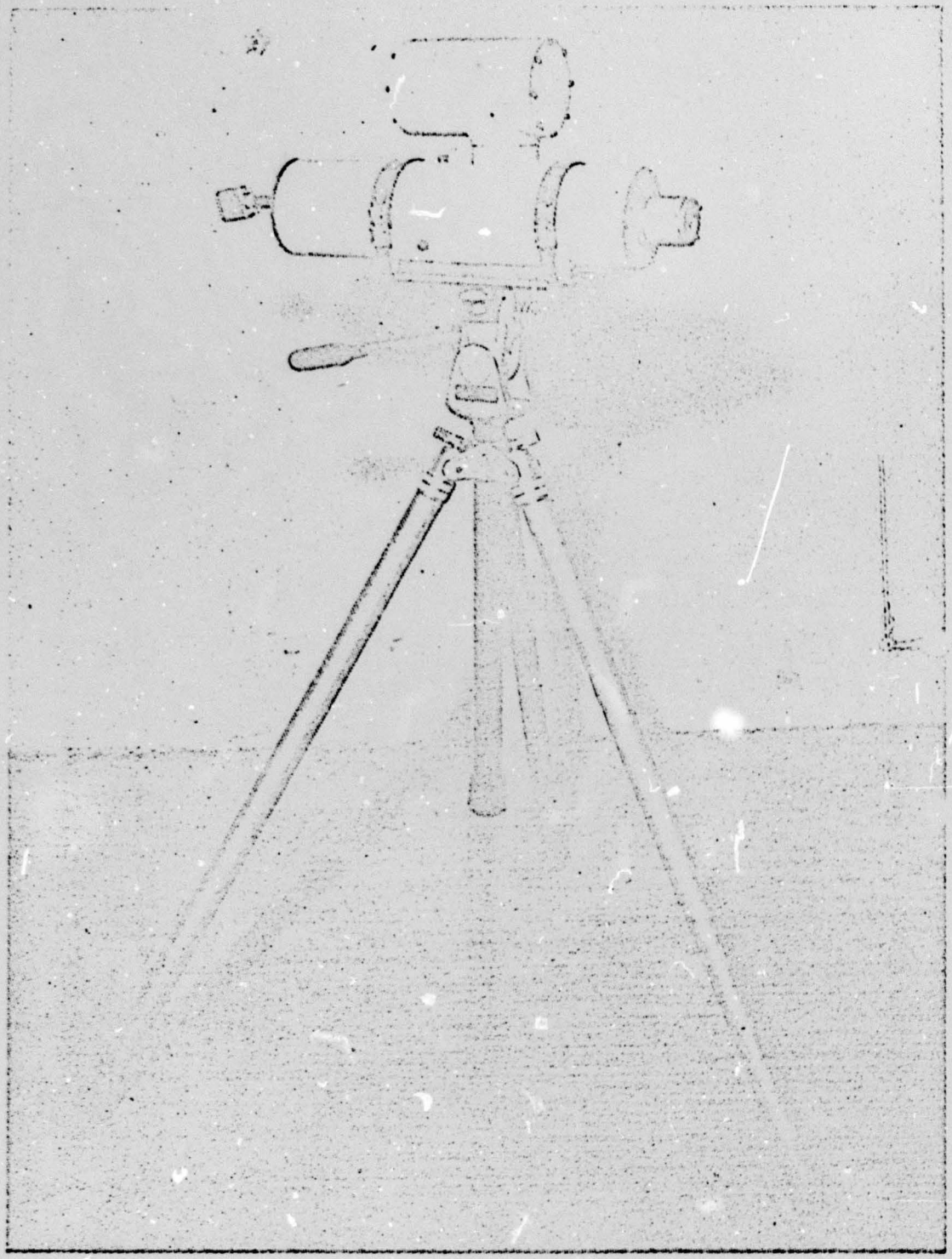

FIG. A-4. OUTPUT DETECTOR

36

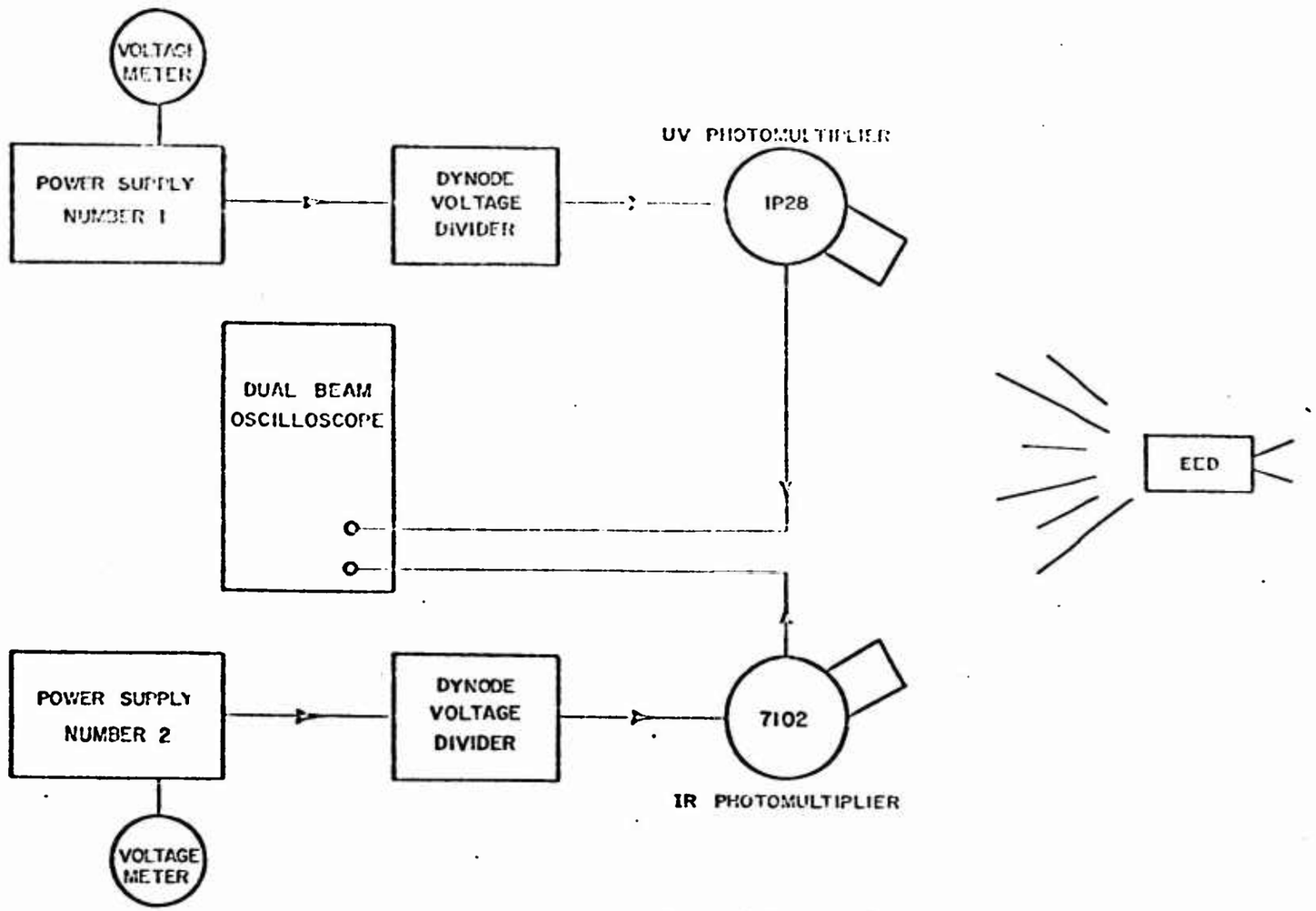

FIG. A-5. BLOCK DIAGRAM OF PRESENT OUTPUT DETECTION SYSTEM

Some of the characteristics of the detector are as follows:

Response region: as shown in Figure A1

Response speed: a rise time of less than 300 nanoseconds has been measured

Linearity: with the proper gray filters the linearity is within 2% over several magnitudes of light intensity.

2. THEORETICAL STUDIES

In a practical sense the device which we have described does not measure discrete energy transitions as described by the fundamental equation $E_\nu = ht$ but, rather, averages. Therefore, an equation such as Planck's blackbody equation is more suited to describe the radiation emanating from the explosives. Indeed, the output detector itself is actually a two-color optical parameter which we will discuss briefly so that we may better understand the operation of the output detector.

As a start we refer to Planck's equation[1] which expressed the specific intensity of radiation of wavelength λ radiated by a blackbody at the temperature T:

$$E_\lambda = \frac{c_1}{\lambda^5} \left(e^{c_2/\lambda T} - 1\right)^{-1} \qquad (1)$$

where

E_λ = Radiant flux emitted per unit area per unit increment of wavelength, watts/cm^2/cm

c_1 = constant = 2.74×10^{-12} watts cm^2

c_2 = constant = 1.438 cm $^\circ$K

λ = radiation wavelength, cm

e = 2.71828

T = absolute temperature of source, $^\circ$K

---

[1] Max Planck, Theory of Heat, Macmillian, 1932, p. 275.

Since there are no perfect blackbodies, emissivity (ϵ) which expresses the ratio of radiant flux emitted by a given surface to that emitted by a blackbody surface at the same temperature and wavelength, should be included:

$$E_\lambda = \epsilon \frac{c_1}{\lambda^5} \left(e^{c_2/\lambda T} - 1\right)^{-1} \tag{2}$$

Emissitivity is usually a function of both wavelength and temperature but for now we will assume it is constant over the wavelengths of interest.

Equation (2) may be simplified, if $\lambda T \ll c_2$, to

$$E_\lambda = \frac{\epsilon c_1}{\lambda^5} \left(e^{-c_2/\lambda T}\right) \tag{3}$$

which is known as Wien's Equation and is a good approximation for temperatures below 4000°K and wavelengths in the visible and ultraviolet portion of the spectrum. If we now consider that a measurement of radiant flux E_λ is made at two different wavelengths or wavelengths bands then we will arrive at an equation which expresses the ratio's of the flux's E_{λ_A} and E_{λ_B}:

$$R = \frac{E_{\lambda_A}}{E_{\lambda_B}} = \frac{\epsilon c_1 \lambda_A^{-5} \left(e^{-c_2/\lambda_B T}\right)}{\epsilon c_1 \lambda_B^{-5} \left(e^{-c_2/\lambda_B T}\right)} \tag{4}$$

36

This can be reduced to

$$R = \left(\frac{\lambda_B}{\lambda_A}\right)^5 e^{-\frac{c_2}{T}\left(\frac{1}{\lambda_A} - \frac{1}{\lambda_B}\right)} \tag{5}$$

The emissivity which we have considered to be constant over the wavelengths of interest has been cancelled out in equation (5) and the ratio R is only a function of temperature T. In actual practice there are few surfaces or radiation sources which possess an emissivity which is constant at all wavelengths, however, the ratio pyrometer is useful because the emissitivity of a surface varies slowly over a range of wavelengths. Thus, if the two measured wavelengths are not too far apart then the ratio of the emissivities will be close to one and equation (5) will be valid. Since only a ratio is being measured the ratio pyrometer is not affected by fluctuations of the radiation source (if the sensors can follow the fluctuation) due to dust, smoke or changes in the source size.

The following are some references which deal directly or indirectly with the two color, pyrometer:

1. Laramore, E. G. and Johnson, D.M., A Method for Determining the Effective Emitting Temperature of a Radiating Body, U. S. Naval Ammunition Depot, Crane, Indiana RDTR No. 44, AD 60415.

2. Kottenstette, J.P.; Fast Response Optical Pyrometer; Design News; Dec. 9, 1964, pp. 183-193.

3. Dennen, R. and Reiffel, L., Development of an Exploding Wire Facility (Confidential Report), Armour Research Foundation, WADD TR 61-45, AD 326 156.

4. Gerhauser, J. M. Spectral Emmisivity of Flash Combustion Reaction Study Program, North American Aviation, Inc. Report No. NA 64-105, AD 431 927.

5. Various Commercial concerns.

37

It is of importance to know the upper and lower limits of the detector's temperature measuring ability. In order to determine the approximate temperature rane of the output detector system we performed some empirical calculations using the following assumptions:

1. Both the 1P28 and the 7102 are assumed to have the same radiant sensitivity at their peak response. (This could be brought about in actual practice by properly adjusting the power supply voltage to each photomultiplier.)

2. Both photomultipliers are assumed to have the response shown in Figure A1. The response curves are those specified in the RCA hand-book on photosensitive devices and in actual practice the responses should vary little from those given. Note that the radiant sensitivity of each detector is the same as mentioned in assumption 1.

3. The hypothetical source of radiant energy is assumed to be a perfect blackbody radiator. This would mean that the emissivity of the source will be 1.0 at all wavelengths of interest. It is doubtful that the radiant output of actual MHDs will have this property, however, we have shown that the UV/IR ratio measuring technique is insensitive to the magnitude of the emissivity as long as the emissivity is fairly constant over the wavelengths of interest. (Even this is probably not true but the broad response bands of the output detector tend to average the variations of emissivity). With these assumptions we may now make a theoretical estimate of the temperature range and output characteristics of the output detector system. Tables are available[1] which define the percentage of radiation at each wavelength eminating from a blackbody at a given temperature. Figure A6 shows some of these data graphically for two different temperatures.

By multiplying the percentage of radiation emitted by a blackbody at a given wavelength and temperature times the sensitivity of the photomultiplier (s) at the same wavelength a curve of photomultiplier output as a function of wavelength will be generated for each temperature. By integrating the area under these curves with the aid of a planimeter a curve of photomultiplier output as a function of blackbody temperature may be obtained. These curves, one for each photomultiplier, are plotted in Figure A2. Notice that the 7102 or infrared detector reaches a peak output at 4000° Kelvin while the 1P28 or ultraviolet detector reaches its peak output at 8000° Kelvin. At 6500°K both detectors have equal output.

---

[1] Tables of Planck's Radiation and Photon Functions, A.N. Lowan & G. Blanch, Journal Opt. Soc. Am. p. 70 (1940).

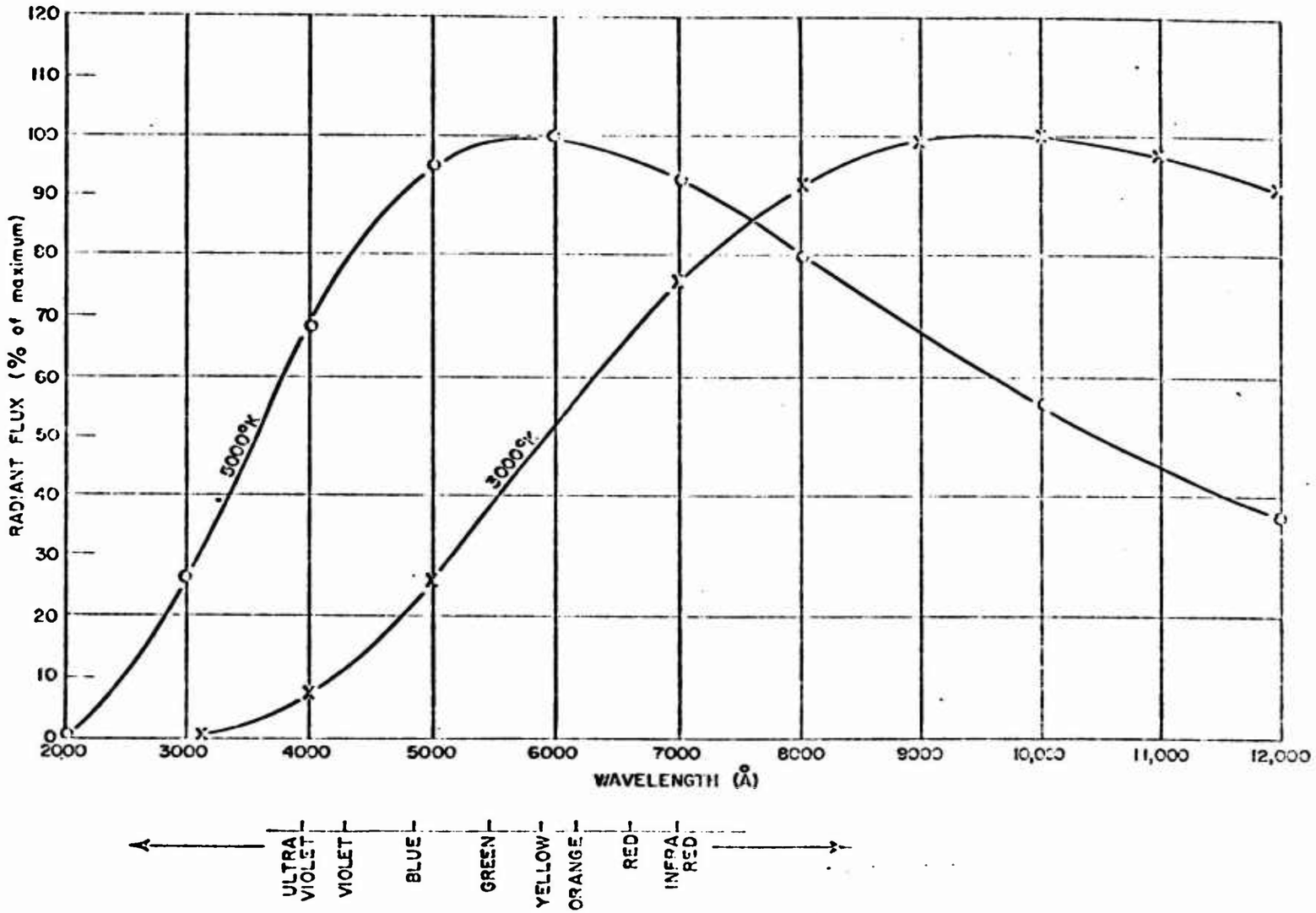

FIG. A-6. COLOR CONTENT OF THE RADIANT FLUX EMITTED BY A BLACK BODY AT VARIOUS TEMPERATURES

41

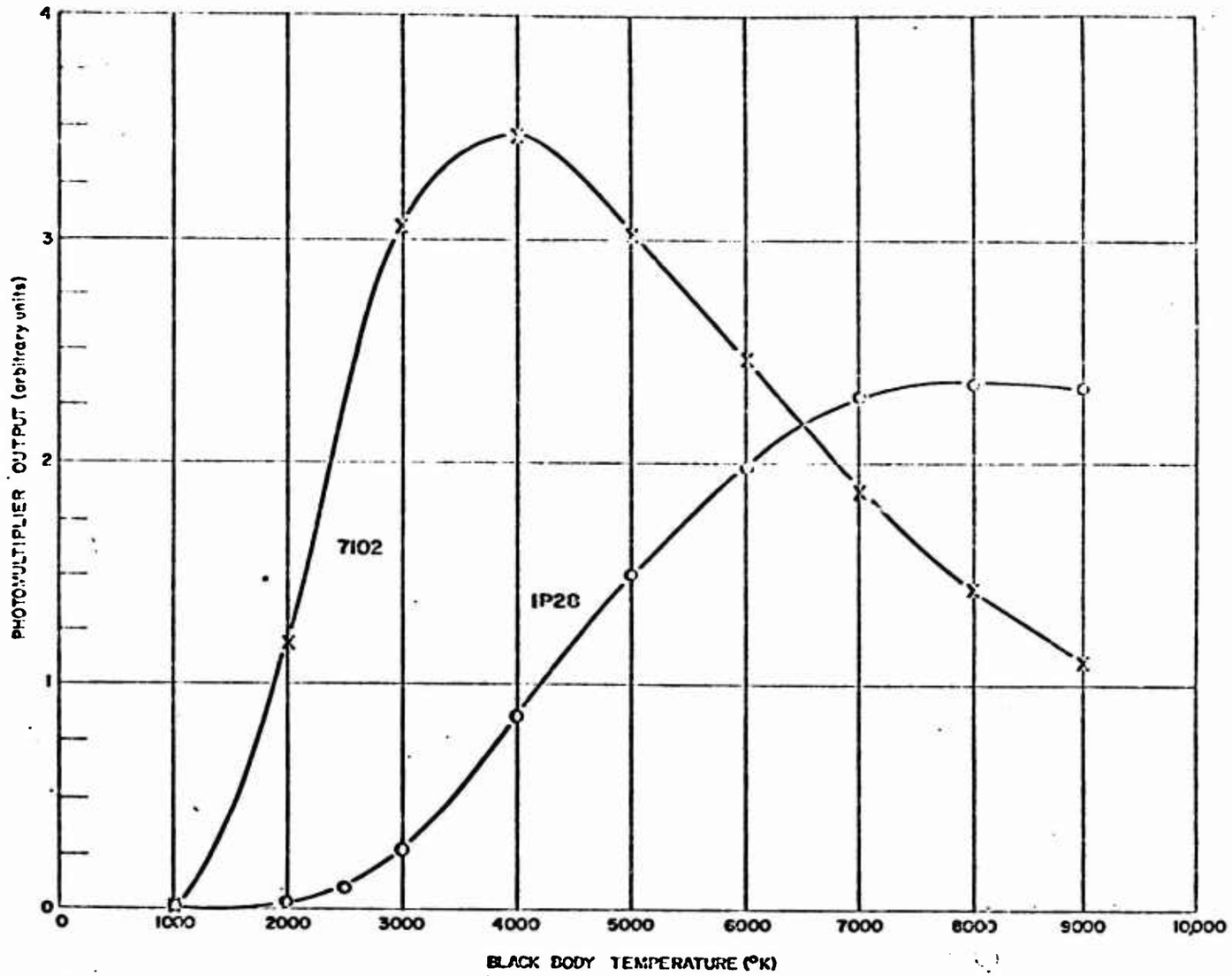

FIG. A-7. PHOTOMULTIPLIER OUTPUT AS A FUNCTION OF BLACK BODY TEMPERATURE

By now taking the ratio of the output of the UV detector to that of the 7102 detector we obtain the curve of UV/IR output ratio as a function of temperature as shown in Figure AB. It is obvious that the function is not linear and therefore, in actual practice a curve such as this would be necessary if an estimate of some output temperature were required. For output measurements on a series of similar devices no knowledge of actual temperatures would be required, only the knowledge that increased UV/IR ratio indicates increased temperature would be needed, but for squibs and igniters one might wish to measure temperature. Figure AC shows that the useful range of the present output detector system probably lies in the region from 2000° Kelvin to above 9000° Kelvin. According to Cook[2] the temperatures to be expected from detonations lie in the range of 2000 to 6000° Kelvin. Squib temperatures are probably no lower than 2000° Kelvin, so that the present output detector system seems adequate for the measurement of the temperature of interest. Should the need arise later to measure reactions of lower temperature a simple substitution of a different photomultiplier in place of the 1P28 would fulfill it.

---

[2] The Science of High Explosives, M.A. Cook, New York, Reinhold Pub. Co., 1953 p. 38.

43

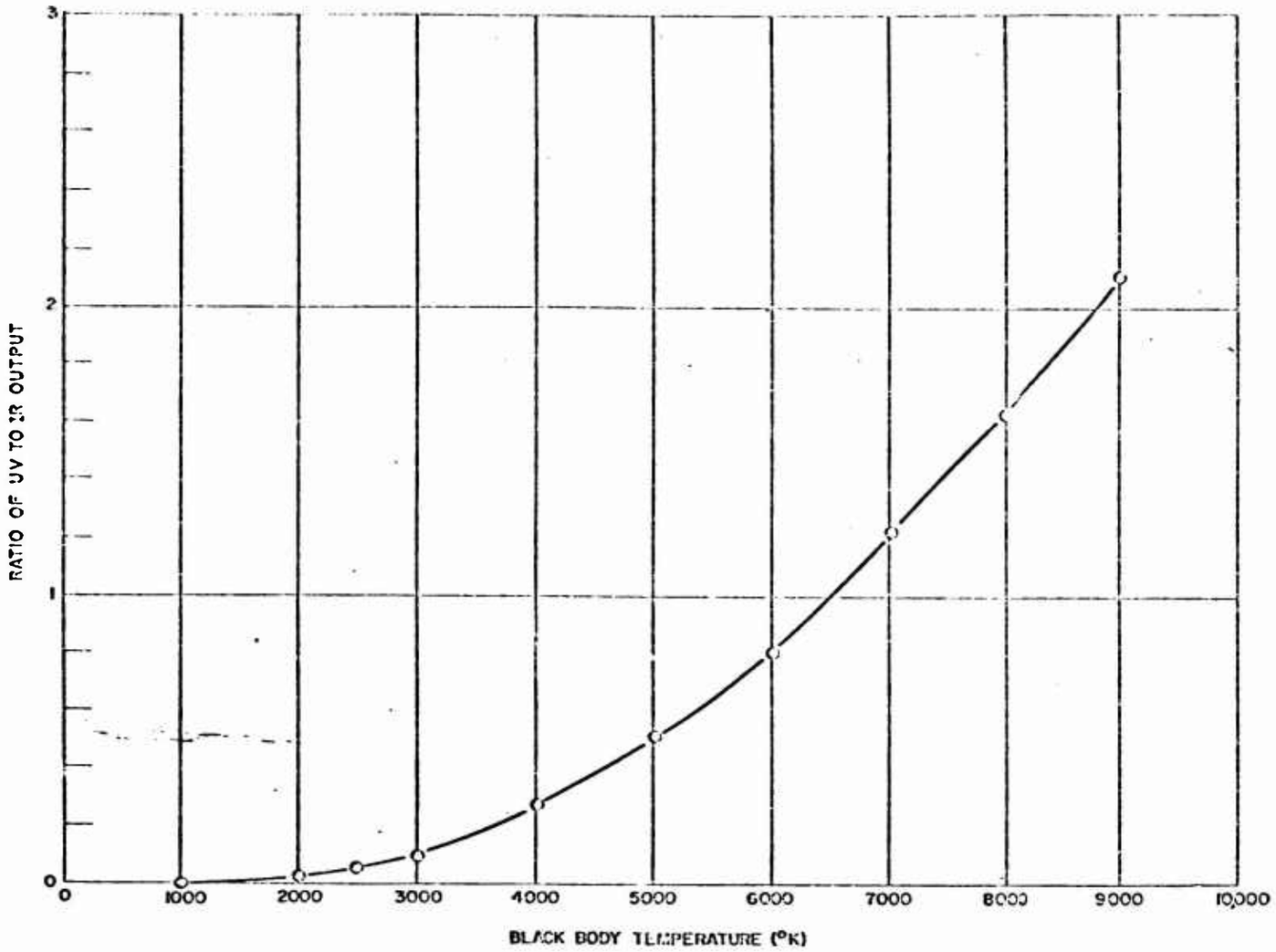

FIG. A-8. RATIO OF UV TO IR OUTPUT AS A FUNCTION OF BLACK BODY TEMPERATURE

APPENDIX B

ADDITIONAL DATA ON M42 PRIMERS
AS SUPPLIED BY J. PELPHREY

Orig. Page 1

CO
P

TABLE 1B

SUMMARY OF TESTS RUN BY J. PELPHREY ON
M42 PERCUSSION CAPS

10N

			Ammunition Lot #121	Ammunition Lot #786	Ammunition Lot #793	Ammunition Lot #530 G.
Handling	[illegible]					1-1
	All Fires, Average		12.04	9.73	11.10	7.30
	Misfires	"	2.04	1.43	2.70	1.00
	Standard Deviation		1.428	1.157	1.200	0.900
Low Temperature						
100 Rounds	Minimum		0.4	0.0	0.1	0.2
Fired from	Maximum		1.3	1.5	0.3	0.7
Each Lot	Mean		0.77	0.35	0.23	0.45
	Standard Deviation		0.153	0.185	0.048	0.0703
	Percentage Misfires		23.7	52.8	20.8	15.100 T
Hot Temperature						
100 Rounds	Minimum		2.5	0.2	0.6	1.8
Fired from	Maximum		4.7	4.1	2.7	3.4
Each Lot	Mean		4.13	1.83	1.70	2.62
	Standard Deviation		0.298	0.805	0.482	0.2638
	Percentage Misfires		7.22	44.00	28.30	10.07
Tests with BRL Equipment						
Average of	Ignition Times		.645	0.700	0.745	0.640
Lot 15	Full Detonation		2.82	2.25	3.01	2.01
Times	Explosion Time		2.21	1.47	0.43	1.33
Period	Blast Length		7.03	3.00	3.00	7.57
Conditions at 75°F						
Av. 110	Initiation*		106.0	104.0	96.0	103.0
" " "	Out of Fixed Tube*		7.1	2.7	2.3	11.0
" " "	Out of M [illegible]		1.9	1.2	0.9	0

Note: * Each reading is average of 10 readings
Oscillograph Time - 100 mm/sec. /cm.

CALCULATION SHEET

46

			Immersion Panel No. 1	Immersion Panel No. 2	Immersion Panel No. 3	Immersion Panel No. 530C	
Condition for 8 days	Not 165°F	Dry					
Avg/10	Gardner		111.0	145.0	93.0	100.0	
" " "	Pilot-Gel Adhesivity		9.5	4.3	2.2	~~[illegible]~~ 0	
" " "	Pilot-Gel Lap/1 v/fm		0.6	0.4	0.6	~~[illegible]~~ 0	
Condition for 8 days	Not 165°F 50% RH						
Avg/10	Gardner		111.0	101.0	87.0	101.0	
" " "	Pilot-Gel Adhesivity		9.5	2.8	2.8	0.5	
" " "	Pilot-Gel Lap/1 v/fm		1.6	0.5	0.7	~~A~~	
" " "							
Condition for 8 days	Not 165°F	Dry					
Avg/10	Gardner		~~[illegible]~~ 107.5	104.0	90.0	94.0	
" " "	Pilot-Gel Adhesivity		6.0	≤ 1.0	2.4	≤ 1.0	
" " "	Pilot-Gel Lap/1 v/fm		2.5	2.2	0.7	0.2	
Condition for 8 days	Not 165°F	50% RH					
Avg/10	Pilot-Gel Adhesivity		6.5	3.5	2.8	≤ 1.0	
" " "	Pilot-Gel Lap/1 v/fm		2.7	2.8	0.6	0.7	
" " "	Gardner		110.0	101.0	87.0	97.0	
Condition for 24 hrs	Not 165°F +	100% R.H.					
			Primer/mix ingredients became disjointed and flowed out of primer cups. All four mixes failed.				

			Remington Arms [illegible]	Remington Arms [illegible]	Olin Mathieson [illegible] 793	Olin Mathieson [illegible] 530 G
Condition	at 115°F at 75% RH					
for 2	days	Decibels *	82.0	< 54.0	< 30.0	30.0
	Photo Light	—	5.0	— 0.8	— 2.0	< 0.4
	Photo Cell	—	1.3	0.4	0.5	— .02
Condition	at 115°F 75% RH					
for 40	days (2 days)					
	Decibels		**	"	"	"
	Photo Light		7.0	2.0	3.1	< 0.5
	Photo Cell		0.5	0.15	0.4	— 0.0
Condition	at 115°F, 75% RH					
for 3	days					
	Decibels		102.0	93.0	83.0	94.0
	Photo Light		7.6	2.8	2.7	< 0.6
	Photo Cell		4.9	3.0	3.0	— 0.9
Condition	at 115°F 50% RH					
for 5	days					
	Decibels		97.0	95.0	81.0	87.0
	Photo Light		9.0	3.4	1.6	0.0
	Photo Cell		2.0	1.4	0.7	0.0

* Decibel readings not reliable, probably weak battery.

Note ** Decibel Meter not functioning.

TABLE 2B

SUMMARY OF PERCUSSION CAP MIXES
AS SUPPLIED BY J. PELPHREY

		←Olin Mathieson→		←Remington Arms→			
		LOT. WWC	LOT WWC	LOT	LOT		
		1-15	358	PA-101	110		
53		530G	793	PA-101	5086		
		% by WT.					
Potassium Chlorate		53					
Lead Sulfocyanate		25					
Ground Pyrex Glass		7					
TNT		5					
Potassium Chlorate			85				
Antimony Sulfide			30				
Lead Sulfocyanate			17				
Calcium Silicide			15				
TNT			3				
Basic Lead Nitrate				53			
Barium Nitrate Gen 1				22			
Antimony Sulfide Gen 2				10			
Aluminum Type II				10			
Tetracene				5			
Lead Sulfocyanate				2	25		
Barium Nitrate					43		
Tetracene					2		
Calcium Silicide					10		
Antimony Sulfide					20		