AD 725538

December 1966

U. S. ARMY TEST AND EVALUATION COMMAND
COMMON ENGINEERING TEST PROCEDURES

SHOCK TEST PROCEDURES

1. OBJECTIVE

The objective of this procedure is to evaluate the reaction of a missile structure to the effects of mechanical shocks.

2. BACKGROUND

Mechanical shock is introduced in the missile, when launched and airborne, by ignition firing, booster operation, rough burning, booster cutoff, separation of stages, sudden maneuvers, etc. Prefiring shock environment, which is sometimes more critical than launch and airborne mechanical shock, is introduced to the missile structure and its associated ground support equipment by a multitude of transportation media and/or careless handling.

The missile structure must be designed to withstand the forces created by the mechanical motions referred to above Mechanical shock testing of missile structures (hereafter referred to as test specimens) is conducted to discover areas in which design changes might be necessary to ensure that the shock environment will not have a deleterious effect on missile performance.

3. REQUIRED EQUIPMENT

a. Shock Machines (Testers) as required
b. Test Fixtures as appropriate
c. Arresting Media (Sand, Lead Pellets, Compressed Gas, etc.)
d. Instrumentation

1. Transducers (Piezoelectric or Strain Gauge Types)
2. Associated Transducer Components (Amplifiers, Cathode Followers, Cables, etc.
3. X-ray Inspection Equipment
4. Oscillographs or Multi-Channel Recorders
5. Oscilloscope-Camera Combinations

4. REFERENCES

A. Vigness, Irwin, The Fundamental Nature of Shock and Vibration, Electrical Manufacturing, 1959.
B. Harris, C. M. and Crede, C. E. (edited by), Shock and Vibration Handbook, Volume 1 and 2, McGraw-Hill Book Company, Inc., New York, 1961.

Reproduced by
NATIONAL TECHNICAL
INFORMATION SERVICE
Springfield Va. 22151

DISTRIBUTION STATEMENT
Approved for public release;
Distribution Unlimited

DDC
RECEIVED
JUN 17 1971

35

1. Harris, C. M. and Crede, C. E., Introduction to the Handbook, Chapter 1, Volume 1.
2. Vigness, Irwin, Shock Testing Machines, Chapter 26, Volume 2.
3. Ayre, Robert S., Transient Response to Step and Impulse Function, Chapter 8, Volume 1.
4. Baxter, Beckman and Brown, Measurement Techniques, Chapter 20, Volume 1.

C. JAN-S-44, Shock Testing-Mechanism for Electrical-Indicating Instruments, 1944.
D. MIL-T-20060, Test Equipment, Shock and Vibration (for Navigational Equipment) and Methods of Test, 1951.
E. MIL-E-5272C, Environmental Testing, Aeronautical and Associated Equipment, General Specification for, 1959.
F. MIL-STD-446A, Military Standard Environments for Electronic Parts, Tubes, and Solid State Devices, 1959.
G. MIL-T-5422, Military Specification Testing, Environmental, Aircraft Electronic Equipment, 1959.
H. MIL-T-4807 (USAF), Military Specification Test: Vibration and Shock Ground Electronic Equipment (Requirements for), 1954.
I. MIL-S-4456 (USAF), Military Specification Shock Variable Duration, Method and Apparatus for, 1953.
J. Morrow, C. T., The Shock Spectrum, Electrical Manufacturing, 1959.
K. Morrow, C. T., Sawtooth Shock as a Component Test, The Journal of the Acoustical Society of America, Volume 28, Number 5, 1956.
L. Shock Testing Facilities, U. S. Naval Ordnance Report 1056, 2nd Revision, 1956.
M. Conrad, R. W., Characteristics of the Lightweight, High-Impact Shock Machine, U. S. Naval Research Laboratory, Report 3922, 1952.
N. Conrad, R. W., Characteristics of Navy Medium-Weight High-Impact Shock Machine, U. S. Naval Research Laboratory Report 3852, 1951.
P. ASTM Standards, Part 7.
Q. Lewis, H. O., Shock Testing Polaris Missile Re-Entry Bodies with an Electrodynamic Shaker, 28th Shock and Vibration Symposium, 1960.
R. McCool, W. A., A Digital Computer Program for the Analysis of Recorded Shock Motion, Nike Zeus Data Report Number 23, White Sands Missile Range, 1961.
S. Rhodes, J. E., Endevco Systems for Mechanical Shock Measurements, Endevco Corporation Report, 1960.
T. O'Hara, George, J., Effect Upon Shock Spectra of the Dynamic Reaction of Structures, Naval Research Laboratory Report 5236, 1958.
U. Environmental Test Facilities, Sandia Corporation Report, 1961.
V. The Hyge Shock Tester, Consolidated Electrodynamics Corporation, Bulletin 4-70, 1957.
W. MIL-E-1D, Military Specifications for Electron Tubes, 1952.
X. Lab Package Tester, LAB Corporation, New York.

BLANK PAGE

Y. Sandia Corporation Standard Test Methods, Sandia Corporation, SC-4452(M).
Z. Cheng, David K., Analysis of Linear Systems, Addison-Wesley Publishing Company, Inc., Massachusetts, 1959.
AA. MIL-STD-810 (USAF), Environmental Test Methods, latest revision.
AB. MTP 5-2-614, Rocket Sled Tests
AC. MTP 5-2-507, Vibration Test Procedures
AD. MTP 5-2-586, Centrifuge Test Procedures

5. SCOPE

5.1 SUMMARY

This procedure describes the necessary particulars to be performed when a test specimen is shock tested using The General Shock Test Method. Simulated Shock Environments are discussed in Appendix E and Equivalent Shock Testing Concepts are discussed in Appendix F for information only.

5.2 LIMITATIONS

This procedure is limited to shock testing using single impact drop test machines. Shock machines (testers) capable of producing multiple shocks are discussed, along with single impact drop test machines, in Appendix B for information only.

6. PROCEDURES

6.1 PREPARATION FOR TEST

6.1.1 Preparation of Test Equipment

a. Determine the input environment or when shock spectrum is being used the output requirement of the test specimen to be evaluated. (See Appendix A).

b. Determine the shock tester to be used. (See Appendix B).

c. Determine the required instrumentation. (See Appendix C).

d. Ascertain that the test fixture meets the specifications of Appendix D.

6.1.2 Preparation of the Test Specimen

a. Ascertain that the test specimen's physical characteristics are in accordance with specified requirements and visually inspect the test specimen for physical damage or corrosion.

b. Fasten the test specimen to the shock tester with a suitable test fixture.

c. Attach a transducer for measuring the input pulse to the test fixture. The transducers shall be mounted as close to the test specimen as possible without touching it, and its sensitive axis shall be parallel to the velocity vector of the shock tester.

d. When required mount a transducer(s), for measuring the output pulse, (the test specimen's response to the shock) on the test specimen. The sensitive axis of the transducer(s) shall be parallel to the velocity of the shock tester.

e. Connect the outputs of the transducers described in (c) and (d) (via applicable associated electronic components) to oscillographs or multi-channel recorders. A camera-oscilloscope shall be connected if photographic data is required.

6.2 TEST CONDUCT

A mechanical shock test shall be conducted as follows:

a. Apply shock pulse as appropriate to the shock tester being used.

b. Measure and record:

1. Drop height of the shock tester carriage or test specimen.
2. Bounce height of the shock tester carriage or test specimen.

c. Record the following input pulse data:

1. Acceleration Level
2. Pulse Duration
3. Rise Time
4. Fall Time

d. Record the following output pulse data:

1. Acceleration Level
2. Pulse Duration
3. Rise Time
4. Fall Time

e. Examine all data obtained in (b), (c) and (d) for evidence of intermittant failure. Record all observations.

f. Inspect the test specimen for catastrophic failure. All observations shall be recorded.

NOTE: In the case of complex test specimen, visual inspection can be misleading and X-Ray inspection shall be necessary to detect catastrophic failures.

g. Steps (b) through (f) shall be repeated, as necessary, to obtain maximum data completeness.

6.3 TEST DATA

a. Record the following shock input pulse data:

Fall Time in Milliseconds
Acceleration Level in Milliseconds
Pulse Duration in Milliseconds
Rise Time in Milliseconds

b. Record the following test specimen shock response parameters:

Acceleration Level in Milliseconds
Pulse Duration in Milliseconds
Rise Time in Milliseconds
Fall Time in Milliseconds

c. Record Drop Height and Bounce Height of Carriage in Feet.
d. Record all observations of intermittent failure.
e. Record all observations of catastrophic failure based on visual and/or X-Ray inspection.

6.4 DATA REDUCTION AND PRESENTATION

6.4.1 Test Results Presentation

The data produced by the procedures outlined in this MTP shall be reduced from instrument indications and physical measurements to tabular forms which permit comprehensive analysis and evaluation.

Prepare a log folder for each test specimen tested and enter all test data when the tests are conducted.

Charts, graphs, calculations, and failure observation statements gathered in the test will become a permanent record in the log. It is imperative that the log for each test specimen be complete; accurate and up-to-date as these logs may be used for future analysis studies.

6.4.2 Data Evaluation

Test specimen evaluation shall be limited to comparing the test results to the applicable specifications and/or the requirements imposed by the intended usage.

6.4.3 Data Analysis

6.4.3.1 General Test Methods

Shock pulses shall be analyzed by use of Shock Pulse diagrams as indicated in Figure 1.

The area under the faired shock pulse represents the velocity change. This velocity change can also be calculated (Reference 4Y) using the following formula:

$$\Delta V = 8.05 \left(\sqrt{nd} + \sqrt{nb} \right)$$

where:

ΔV = Change in velocity (in feet per second)

nd = Drop height of carriage (in feet)

nb = Bounce height of carriage (in feet)

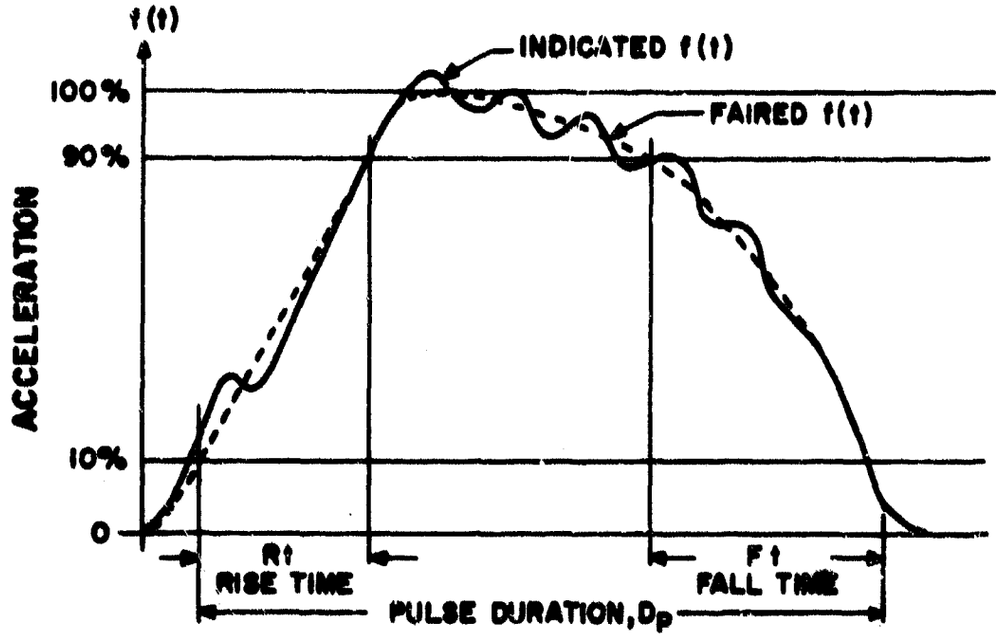

Figure 1. Typical Shock Pulse Diagram

The area under the shock pulse curve denoting velocity change should be within plus or minus 20 percent of the velocity change calculated using the equation. If it is not, improper instrumentation and/or recording equipment probably has been used for monitoring the shock pulse values. Check the instrumentation before collecting data to be used for report purposes.

APPENDIX A

TEST SPECIFICATIONS

TEST CONSIDERATIONS

In general, a rigorous definition of the shock environment does not exist; however, a mechanical shock generally is taken to mean that a significant change in position occurs during a relatively short interval of time. This change in position is taken to be transient and nonperiodic and may be represented as follows:

$$f(t)\,[U(t) - U(t - td)] \neq f\,(t \pm p)$$

where:

td = shock pulse time duration

$$U(t) \quad \text{unit step function} \begin{cases} = o & t < o \\ = 1 & t \geq o \end{cases}$$

$$U(t - td) \begin{cases} = o & t < td \\ = 1 & t \geq td \end{cases}$$

f(t) = time response function (acceleration, velocity, or displacement)

p = shortest time interval which will satisfy the periodicity of f(t)

A qualitative relationship is established, in the case of structural response to distinguish between mechanical shock and vibration levels. The shock levels generally are taken to be two or more times greater than the nominal vibratory levels.

Mechanical shock tests are derived from test considerations such as specification requirements described below, shock environment simulation, (see Appendix E) and equivalent testing concepts (see Appendix F).

SPECIFICATION REQUIREMENTS

Shock test procedures may be outlined in considerable detail in various specifications. These specifications may be originated in the procurement contract or they may be included as military specifications. References 4C through 4I and 4AB list the most appropriate military specifications for shock testing. Several ways in which a shock test procedure may be described by specifications and/or procurement documents follow:

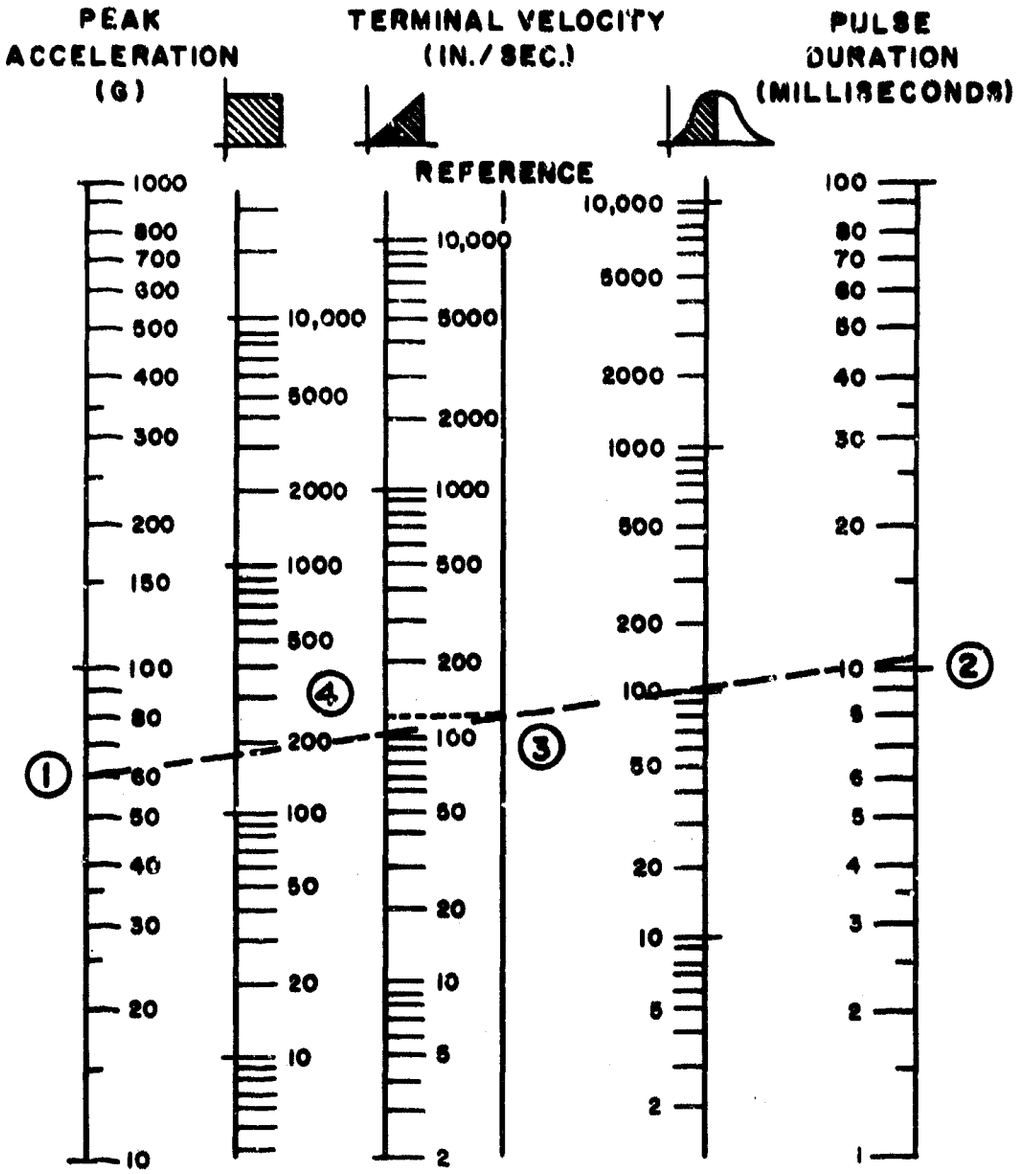

Instructions: a. Set peak acceleration requirements at 1 .

b. Set pulse duration requirement at 2 .

c. Use straight edge to draw line from point 1 to point 2 and note intersection with reference at 3 .

d. Draw horizontal line from reference point at 3 and note intersection with square, triangular, and quarter sine pulses. Terminal velocity (in/see) is read directly. See point 4 for example.

Figure A-1 Terminal Velocity Nomograph

a. Shock Pulse Specification - This specification describes the shock pulse shape requirements, i.e., half sine, triangular, square, etc. In addition to the pulse shape, the required maximum acceleration (or displacement or velocity) level and time duration are given. To satisfy the requirement for a particular shock pulse shape, the characteristics of the particular shock machine to be used must be known to arrive at the proper impact velocity and arresting media. For shock test machines, the arresting media may be sand, lead pellets, metering of a viscous substance, compressed gas, etc. Appendix B describes the different type of shock machines available. A nomograph of theoretical impact velocities for particular type shock pulses is shown in Figure A-1.

The impact media must be compatible with these terminal velocities to produce a particular shape of shock pulse. The shock pulse shape specification is the most common type of specification requirement.

b. Shock Spectrum Specification - This specification describes the maximum response requirements of the test specimen at particular frequencies. Generally, if a particular shock spectrum requirement is specified, the development of the test specimen is in the early stage. The natural frequencies of the equipment item, mounting arrangements, and mechanical impedances of associated structures are unknown at this stage. Therefore a smooth shock spectrum with respect to level and frequency is necessary as the measured shock spectrum has not been determined. References 4J and 4K describe a widely accepted shock spectrum requirement for test specimens in the development stage where measured shock spectra are not available. This requirement specifies that the shock spectrum amplitude be plus and minus 100 g from 100 to 700 cps as shown in Figure A-2.

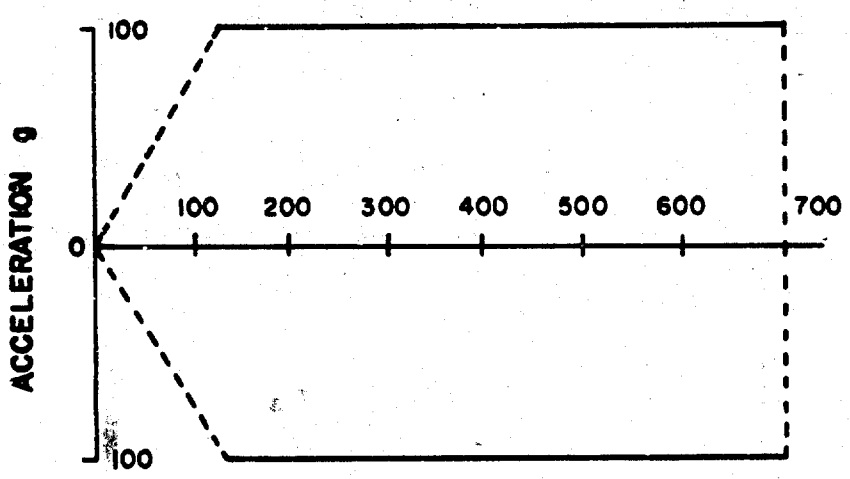

Figure A-2. Typical Shock Spectrum Requirement

This shock spectrum may be produced, at least in an approximate manner, by applying a sawtooth shaped shock pulse to the test specimen. The sawtooth pulse shape can be produced by dropping a shock table onto a cylindrical lead pellet whose top is conical. An ideal sawtooth pulse and the lead pellet shape are shown in Figure A-3.

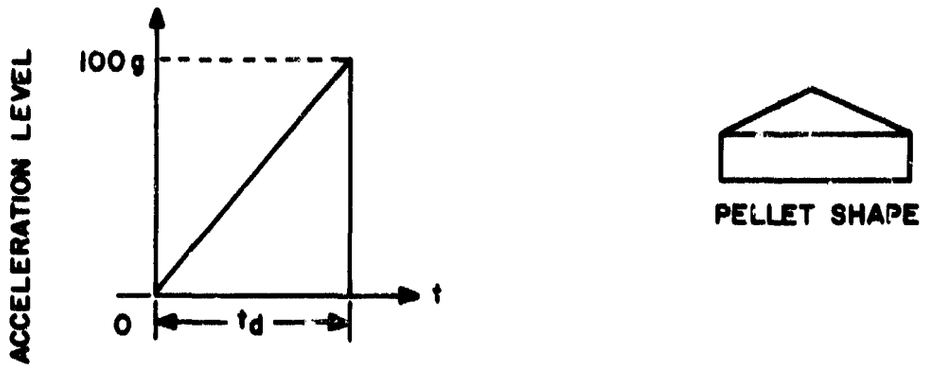

Figure A-3. Ideal Sawtooth Pulse and Lead Pellet

The use of a sawtooth shaped shock pulse yields a shock spectrum that is more likely to excite all of the components of an equipment item to a designated magnitude and prevent over testing at particular frequencies and under testing at others.

c. Particular Shock Machine Specifications - Many military specifications (see References 4G and 4I) require that the equipment withstand shock environment as applied by a particular shock machine. For example, one military specification (Reference 4G) required that 18 impacts with a drop height of four inches be applied to the test specimen using this machine. The Naval Research Laboratory also has designed and built several special shock machines which are used to shock test and qualify equipment procured by the Navy. The characteristics of these machines are described in References 4L, 4M and 4N. The specification of a shock test to be performed on a particular machine in a given manner has several advantages. First, when particular shock motions are specified, it is often impossible to achieve these motions because load reactions may seriously affect the pulse shape. The specification of a test for a particular machine avoids this. Second, the field environment may be carefully studied to design and construct a machine whose damage characteristics correspond to the shocks which occur during service. If a machine is available which provides an environment corresponding to service shock levels, consider specifying a particular machine and method of test rather than a prescribed pulse or shock spectrum.

d. Impact Specification - Some specifications require that the test specimen be subjected to shocks produced by a drop onto a concrete pad or by letting the specimen roll down an inclined plane and into a barrier. The number of impacts, orientation of the test specimen, sequence of impacts, and drop height or inclined plane length are specified. This type of specification is applicable to ascertaining the suitability of equipment to withstand transportation and/or handling environment and represents a simulation of the actual field conditions. Tests of this type have been standardized to a large extent by the American Society for Testing Materials (see Reference 4P).

APPENDIX B

SHOCK MACHINE (TESTER) FACILITIES

Shock Machine (Tester) Facilities

Selection of an appropriate shock machine (tester) to accomplish the test is a prime consideration. Generally, the type of tester to be used is governed by the specifications or by prior experience. However, when a shock test is to be designed for a particular equipment item, the selection of the shock tester is dictated by the shock pulse shape required or by the particular environment to be simulated. If the shock spectrum has been calculated from the service environment, a shock tester should be selected, which provides a similar shock spectrum.

When a shock tester is installed, an experiment should be conducted to determine the shock motions or shock spectra, generated by the tester under specified conditions. In general, the experiment should be based on a statistical design so that the important load parameters (drop height, specimen weight, instrumentation, etc.) and their variance are established mathematically. Figure B-1 shows a typical pulse selection chart, obtained from an experiment conducted on a pellet type, drop tester to establish the required drop height onto a lead pellet to produce a sawtooth pulse of specified amplitude and pulse duration. Once the characteristics of the shock tester have been established, perform periodic calibrations of the tester to ensure that these parameters have not changed. Before a series of tests is conducted, check the calibration by using a dead weight load and the parameters determined from the experimental design.

Individual types of shock testers are described in the following paragraphs.

Velocity Shock Testers - This type of tester imparts approximately an instantaneous change in velocity to a test specimen. The shocks generally are imparted to the test specimen by dropping the test specimen (vertically or on an inclined plane) from a prescribed height onto a suitable surface. A 300-foot drop velocity shock tester is shown in Figure B-2. Vertical drops are made by lifting the test specimen to the desired drop height and releasing it over a target. Drops may also be made by fastening the test specimen to a carriage which is allowed to move down one of the cables (inclined 40 degrees from the ground) and released to impact on a target. In this manner both a vertical and horizontal velocity component is imparted to the test specimen.

Other velocity drop testers may be fabricated using a simple A-frame and quick release mechanism for impacting the test specimen on a prescribed target. This method of testing is applicable to the simulation of handling shock environments.

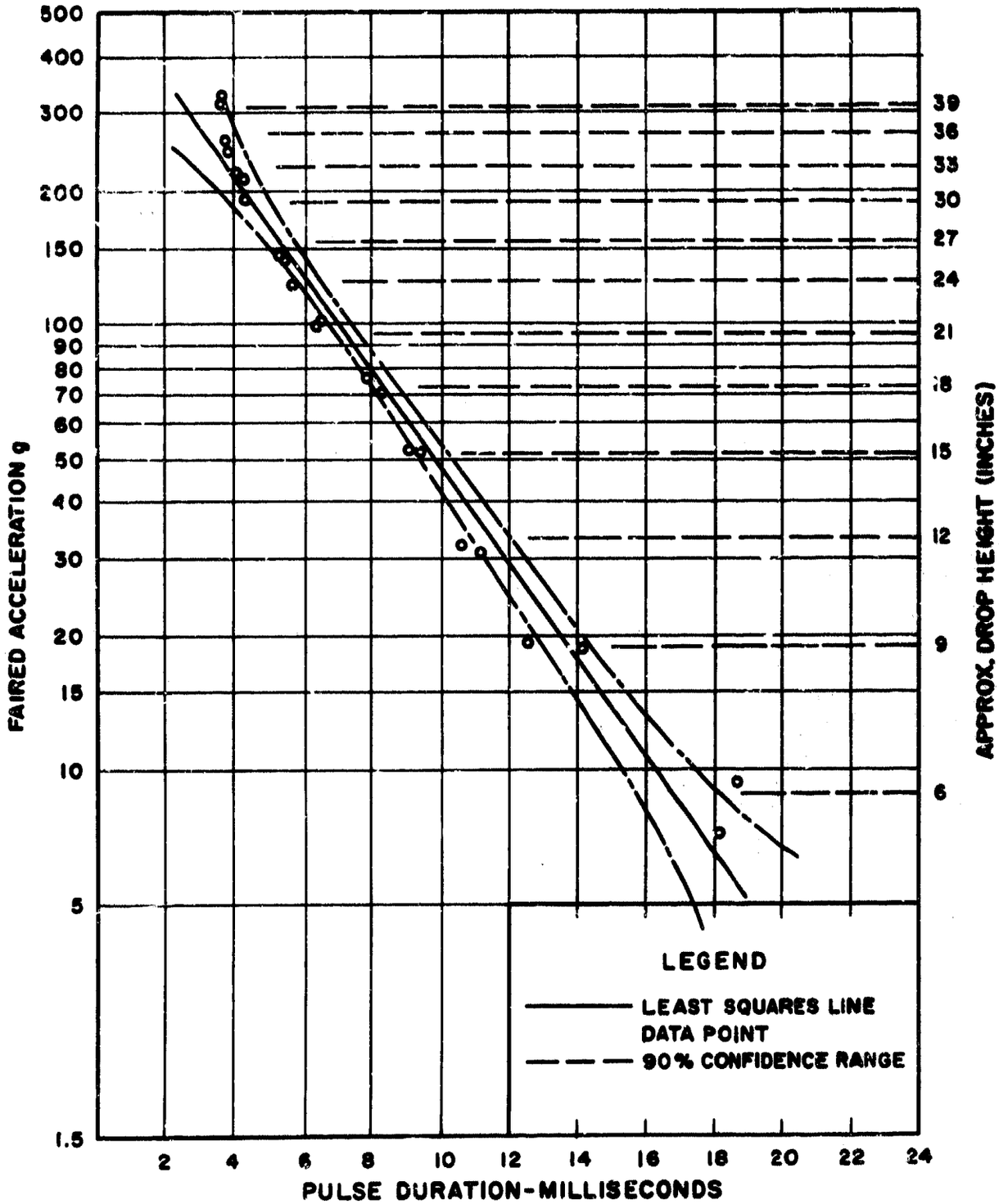

Figure B-1. Typical Pulse Selection Chart for a 500 lb. Load

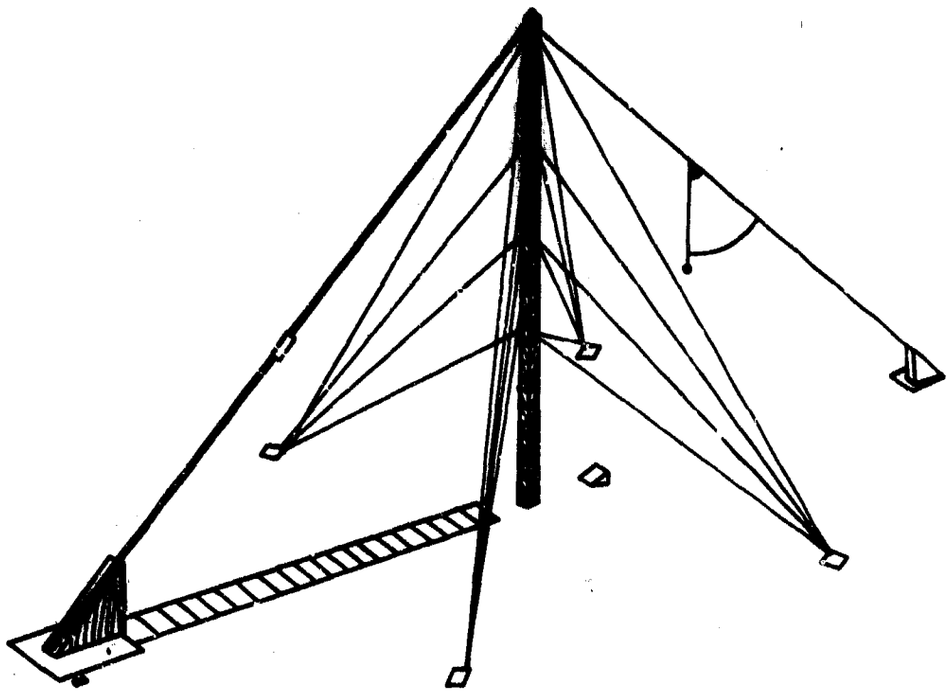

Figure B-2. 300-Foot Drop Velocity Shock Tester

Railroad humping or switching operations are simulated by inclined plane velocity shock testers. A carriage holding the test specimen is allowed to roll down an inclined, twin track and strike a barrier as shown in Figure B-3.

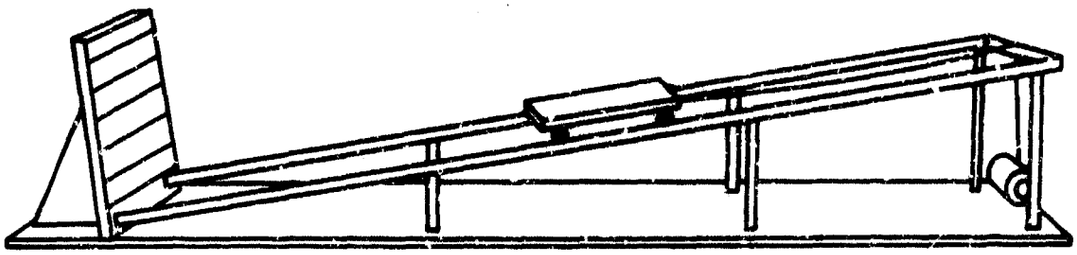

Figure B-3. Inclined Plane Velocity Shock Tester

Numerous others have been designed and built. One such inclined plane tester is capable of testing items weighing up to 10,000 pounds (see Reference 4U).

Simple Shock Pulse Tester - In most cases, this type of shock tester is designed and built by the using agency for special shock tests. To provide an idea of the variety of shock testers available for producing a simple pulse, a brief description of each type follows:

a. Drop Tables - There are more shock testers of this type available for laboratory use than any other type. An accelerated drop table shock tester consists of a fairly rigid table upon which is fastened the test specimen. The table is elevated a prescribed distance above the impact medium and allowed to drop, guided by a carriage mechanism. The table, with test specimen attached, strikes the impact media with a certain initial velocity. This initial velocity may be imparted either by gravity or by a combination of gravity and externally applied force (such as elastic cords). The table may impact on a spring, into sand, or on a plastic pellet. A typical accelerated drop table whose impact velocity is increased by the use of shock cords is shown in Figure B-4.

The accelerated drop table shock tester is described in Reference 4U.

A typical sand impact drop table, with test specimen attached, which impacts into sand is shown in Figure B-5. Depending on the arrangement of the blocks under the drop table, a shock pulse whose shape approximates a half sinusoidal is produced. However, the pulse shapes are not repeatable within broad limits.

b. Air Guns - Air guns may be used to accelerate small test specimens up to 2400 times the force of gravity (g). Air pressure is used to accelerate a piston, upon which is mounted a test specimen, down the gun barrel. This air pressure is adjustable, depending on the desired shock pulse properties. A quick release mechanism releases the piston. The muzzle of the gun is closed so that the piston is stopped by compressed air action. Air bleeder holes may be placed in the gun barrel to absorb energy and prevent excessive oscillations of the piston-test specimen combination. A typical air gun shock tester and the shock pulse produced by the air gun are shown in Figure B-6.

c. Hyge Shock Tester - Specifications and a description of the operation of the Hyge shock tester are given in Reference 4V. A force through a known displacement can be used to provide an acceleration to a table-test specimen combination. The operation is based on a pressure differential in two chambers separated by a thin diaphram seal. As the pressure in one chamber is increased the diaphram breaks and the pressure differential acts on the bottom surface of a piston. The shape of the shock pulse experienced by the thrust column and table-test specimen load is determined by the orifice size and metering pin shape. By altering these two factors, it is possible to obtain many types and shapes of pulses. However, the reaction of the thrust column and table-test specimen load also has a definite effect on the shock pulse. Simple pulse shapes without

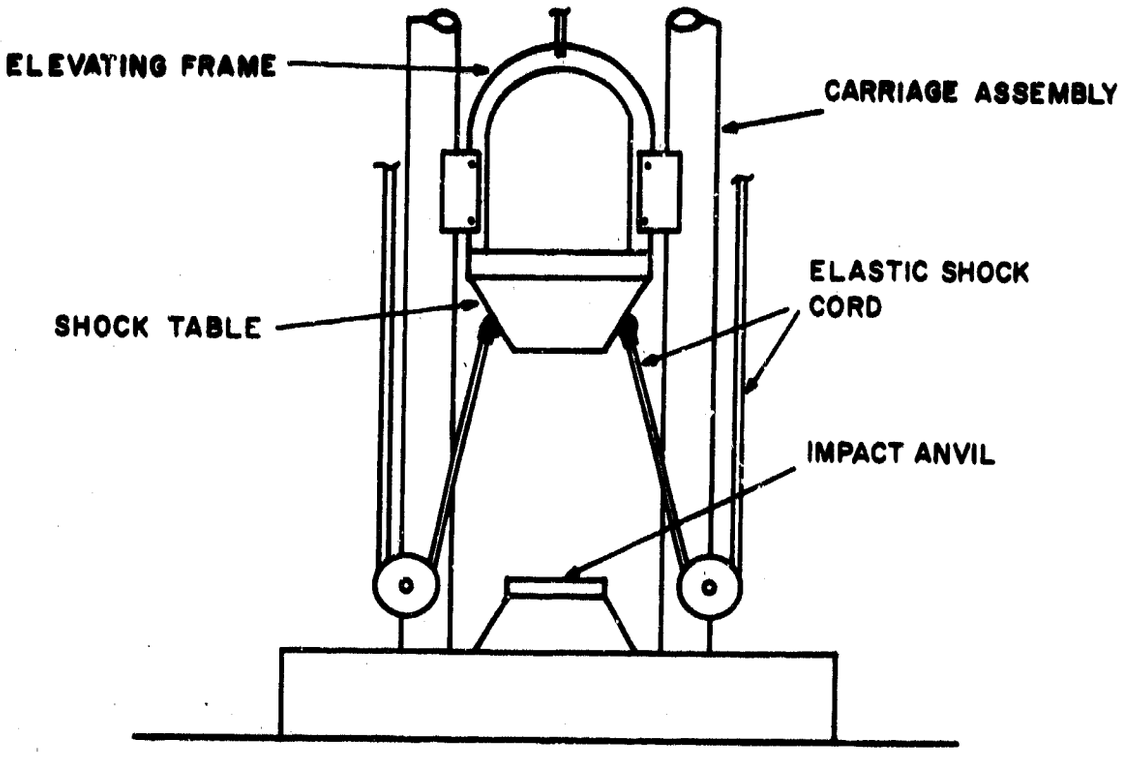

Figure B-4. Typical Accelerated Drop Table

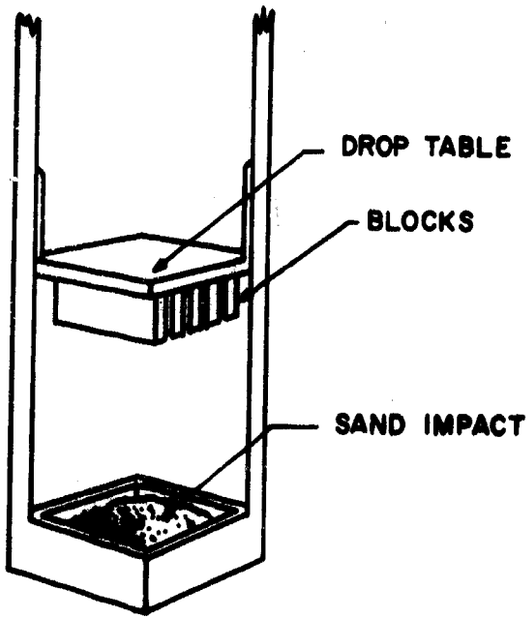

Figure B-5. Typical Sand Impact Drop Table

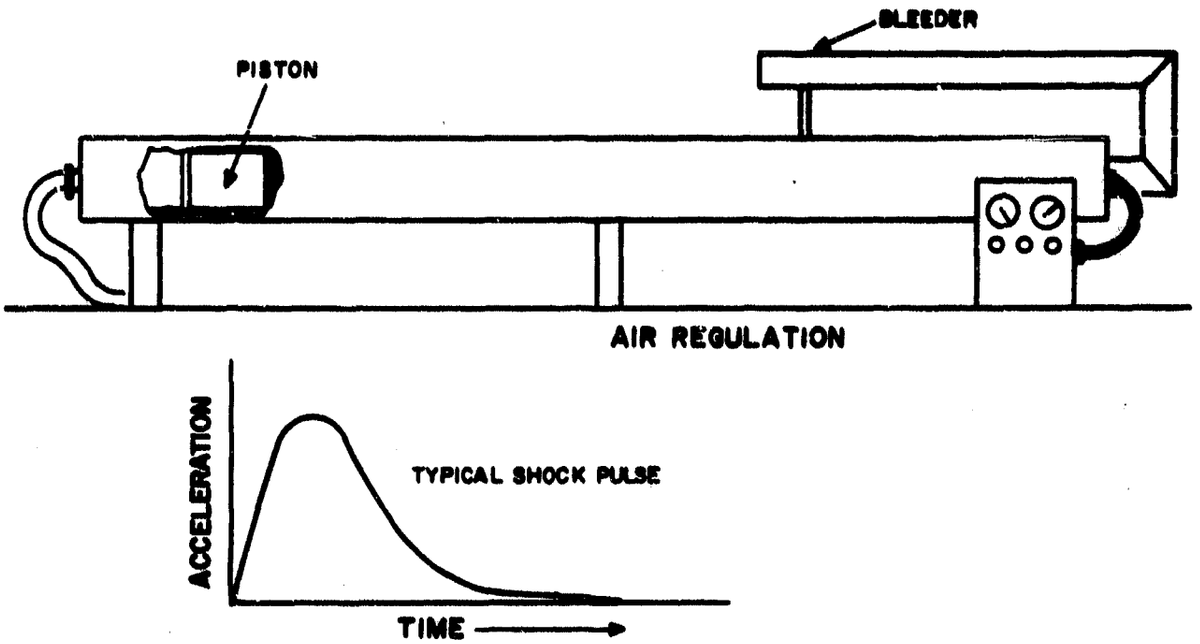

Figure B-6. Typical Air Gun Shock Tester and Resultant Pulse

extraneous hash can be obtained only when the reaction load is not complex or is unimportant.

Shock Testers for Generating Complex Shock - It is impractical to construct a shock tester to produce a shock environment identical to that observed during service, because there are large variations in the acceleration time histories representing the same type of shock environment. However, it is possible to design a shock tester whose acceleration time history input to a test specimen represents an average of the measured shock environment; or, the tester may be designed to provide a conservative test by applying the maximum shock levels which were observed during service to the test specimen. A test specification may then require an equipment item to withstand the shock environment input by a particular machine under given conditions of operation. The Naval Research Laboratory has designed several shock testers to subject equipment to environments that approximate those that act on a ship subjected to noncontact, underwater explosions. These machines are described in References 4M and 4N. A shock tester producing a complex shock for testing electronic devices is described in Reference 4W.

Shock Machines for Multiple Impact Shock - To simulate the shock environment associated with rail and/or truck transportation, shock testers have been designed to apply repeated complex shock motions to equipment packages, equipment containers, and to the equipment or any combination thereof. One such shock tester is described in Reference 4X. A wooden platform is mounted on eccentric cams which, when rotated, cause a low frequency vertical vibration and with an acceleration amplitude slightly greater than one gravitational unit.

A package containing an equipment item placed on the platform will lose contact with the surface of the platform during each cycle of vibration and will be subjected to repeated impact.

A test, standardized by the American Society for Testing Materials, and used for shock testing of shipping containers with a revolving hexagonal drum, is described in Reference 4G. Baffles are located on the inner face of the drum and as the drum is rotated, the container being tested is carried around until it falls over the baffle onto the bottom of the drum. A diagram of the revolving drum tester is shown in Figure B-7.

An electrodynamic vibration exciter may be used to impart low level multiple shocks to relatively small items. The principle of operation of these exciters is described in MTP 5-2-507.

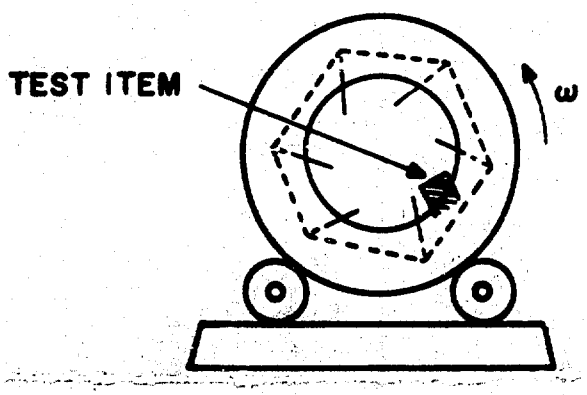

Figure B-7. Revolving Drum Shock Tester Diagram

Miscellaneous Shock Tester - A ballistic pendulum shock tester, shown in Figure B-8, is used to provide high level shock of short duration to small test specimens.

The test specimen is fastened to one side of a cylindrical mass. A second cylindrical mass is pulled back along a circular arc and allowed to impact through a linear spring against the end of the first mass. The pulse shape is dependent on the length of arc through which the second mass moves, the characteristics of the linear spring, and the reactive properties of the test specimen-first mass combination.

Quick-starting centrifuge facilities are also used. Information describing these facilities can be obtained from companies manufacturing such equipment and/or by referring to MTP 5-2-586.

Several rocket sled tracks are available for generating controlled acceleration shock pulses of relatively long duration. The pulse is shaped during deceleration by water braking or, in cases where the rocket sled is not recovered, by striking a suitable surface. The locations, methods of use, and descriptions of available facilities are explained in detail in MTP 5-2-614.

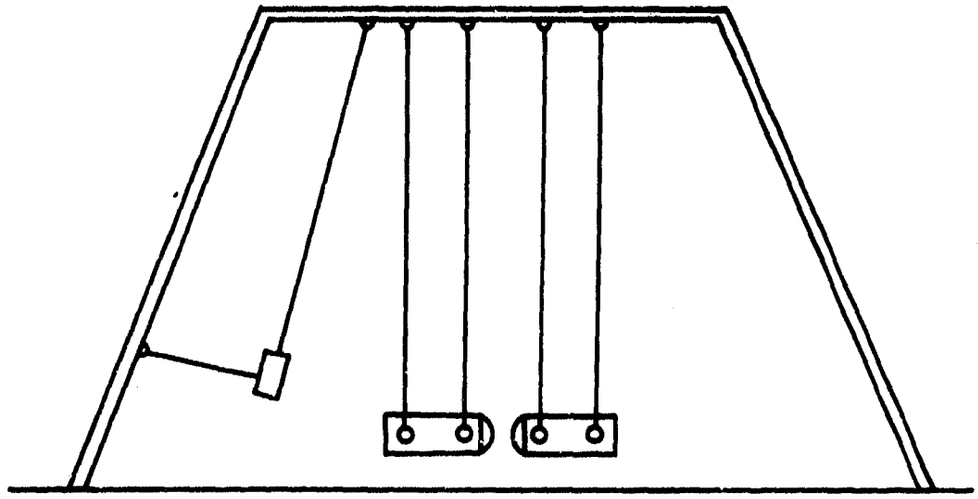

Figure B-8. Typical Ballistic Pendulum Shock Tester

Tabulation of Shock Testers - Table B-1 contains a tabulation of shock testers and a brief description of their characteristics. This is not a complete list of shock facilities available but it indicates the types and their capabilities.

Table B-1. Shock Tester Characteristics

No.	Shock Testers	Type of Shock	Nominal accel., g	Nominal Velocity Change, ft/sec	Nominal Duration of Shock Milliseconds	Maximum Load, lbs.	Comments
1	Drop Tester for Shipping Containers.	Velocity shock	- - -	20	- - - -	- - - -	
2	Drop Tester for Air-drop Delivery	Velocity	- - -	100-150			
3	Inclined Plane Test	Velocity	- - -	10-15 (10 mph)	- - -	- - -	Simulates railroad coupling shocks
4	Shock Testing Mechanism for Electrical Indicating Instruments (JAN-S-44)	Half-sine accel. pulse	120	8	2	2	Spring may be modified to modify acceleration & duration
5	Medium-impact Shock Machine (Sand Drop Table)	Accel. pulse	30-100	15-20	30-8	30,100,200	Testers are made in 3 sizes to cover the load range
6	NOL 10-ft Drop Tester	Accel. pulse	50-600, etc.	5-25	2.5-5	150	
7	NOL 40-ft Free-fall Drop Tester	Accel. pulse	80,000	50	0.1-0.2	2	
8	NOL 100-ft Drop Tester	Accel. pulse	500	80	10-25	25	A portable tester with an accelerated drop equivalent to 100 feet
9	NOL 1,200-ft Drop Tester	Complex accel. pulse	10,000	280	2	2	An air-gun
10	Square-wave Tester	Square accel. pulse	2-60	80	10-25	25	

Table B-1. Shock Tester Characteristics (Cont'd)

No.	Shock Testers	Type of Shock	Nominal accel., g	Nominal Velocity Change, ft/sec	Nominal Duration of Shock Milliseconds	Maximum Load, lbs.	Comments
11	Short Duration Drop Tester	Complex accel. pulse	17,000	8	0.05	2	
12	Barry Drop Tester	Half-sine, sawtooth or other	100	10-20	1-20	400	Amplitude and shape of acceleration may be changed by modifying shape and material of impact pellet
13	Lycoming's Shock Tester	Sawtooth and shaped accel. pulses	100	10-20	1-20	40	Amplitude and shape of acceleration may be changed by modifying shape and material of impact pellet.
14	NOL Air Guns.	Accel pulse	1,000-200,000	750	100-2	200-0.5	Gun diameters vary from 21 to 2 inches. The first and second values given are for these respective diameters.
15	Hyge Shock Tester	Force pulse of controllable shape	300	- - -	100-2	25	Primarily a force generator; acceleration is dependent upon magnitude of load.
16	Navy High-impact Shock Tester for Lightweight Devices	Complex accel., wave.	2,000	10	- - -	250	Primarily simulates a complex structural-borne shock by ship-type structures. Max. disp. 1.5 inches.

Table B-1. Shock Tester Characteristics (Cont'd)

No.	Shock Testers	Type of Shock	Nominal accel., g	Nominal Velocity Change, ft/sec	Nominal Duration of Shock Milliseconds	Maximum Load, lbs.	Comments
17	Navy High-impact Shock Tester for Mediumweight Equipment.	Complex accel. wave.	2,000	10	- - -	5,600	Primarily simulates a complex structural-borne shock by ship-type structures. Max. disp. 3 inches.
18	Shock Machine for Electronic Devices	Complex accel.	1,100	10	- - -	70	Simulates rough-treatment high-intensity shocks for installed tubes. Max. disp. [illegible] inches.
19	Rock, Shock, and Vibration Tester	Complex accel. wave.	700	9	- - -	3,500	Simulates shipboard shock, vibration, and inclination. Max. disp. 3 inches.
20	L.A.B. Package Tester.	Multiple.	- - -	- - - -	- - -	1,000	Several sizes available
21	Revolving-drum Tumbling Tester.	Multiple.	- - -	- - -	- - -	- - -	A test for shipping containers.
22	British Bump Tester and I.E.C.	Multiple.	50	2-3	- - -	50-250	Test to ensure ruggedness for transportation hazards and rough treatment. About 10,000 bumps normally specified.
23	Pendulum Tapper.	Direct impact	- - -	- - -	- - -	- - -	Used primarily to excite microphonics in electron tubes.

No.	Shock Testers	Type of Shock	Nominal accel., g	Nominal Velocity Change, ft/sec	Nominal Duration of Shock Milliseconds	Maximum Load, lbs.	Comments
24	Rotary Accelerator.	Constant.	40-50	- - -	- - -	100-8	Acceleration applied in a few milliseconds
25	Charpy and Izod Testers.	Direct impact.	- - -	- - -	- - -	- - -	A metallurgical test for specimen brittleness.

APPENDIX C

INSTRUMENTATION

The acquisition of shock data and the monitoring of test results are dependent on proper instrumentation of the test specimen. Instrumentation requirements and recommendations for mechanical shock tests are described in References 4P4 and 4S of this MTP and in other applicable MTP's. In addition, the shock tester and fixture facilities used are described in Appendices B and D respectively. Therefore, the presentation in this paragraph only generally describes the monitoring equipment and some of the difficulties associated with the measurement of shock.

The measuring equipment usually includes accelerometers, the associated accelerometer components (such as the cable, amplifier, cathode follower, etc.) as determined by the accelerometer used, and the recording equipment. The accelerometer, which may be the piezoelectric or strain gauge type, is used as a transducer to pick up the shock pulse directly from the test specimen and provide an electrical output. The accelerometer components are used to obtain an accelerometer output level within the operating limits of the recording equipment. The recording equipment may include as oscillograph, a multichannel recorder, and/or a camera-oscilloscope combination. Concurrently, the accelerometer considered the most suitable for use in shock tests, is the piezoelectric type of accelerometer. This type of accelerometer is described in Reference 4S.

Piezoelectric accelerometers generally are more satisfactory for shock measurements than are other types because of their wide frequency range response characteristics. With piezoelectric accelerometers, the associated electronics may be critical. This includes amplifiers, cathode followers, cables, recording equipment, etc. With strain gauge accelerometers, frequent calibrations and checks for amplifier drift are necessary.

One of the most troublesome aspects of shock measurement is that the required instrumentation is a direct function of the maximum acceleration levels. This situation exists because all accelerometers are, essentially, spring mass systems whose response characteristics are related to the parameters of the applied transient. During the environmental shock tests, it is necessary to estimate the amplitudes and durations of the transients to properly instrument the shock environment. The shock parameters often vary over a wide range during different environmental events (launch, separation of booster, maneuvers, etc.) and the selection of an instrumentation system becomes more difficult. In the laboratory, the situation is somewhat improved since the desired pulse parameters usually are known.

APPENDIX D

TEST FIXTURE (OR JIG) FACILITIES

When a shock tester is to be used to conduct a test, it is often necessary to design a fixture to fasten the test specimen to the table of the shock tester. The attaching of a test specimen to a shock tester is unique for each type of shock tester and the attachment points vary for each test specimen. Therefore, the jig and fixture design recommendations presented herein are general. Recommendations on fixture design, materials and construction, and tiedown bolts follow:

a. Design -- In general, the holding jig should be designed so that the test specimen is restrained using its normal mounting means with the fasteners suitably torqued. However, below the test item mounting portion, the fixture should be made as rigid as practical. Fixture resonant periods generally should be at least four times lower than the specified pulse duration; i.e., $Dp \geq 4\ Tf$, where Tf is the lowest resonant period of the fixture and Dp is the duration of the shock pulse.

b. Materials and Construction-- The two most common materials used for jigs and fixtures are aluminum and magnesium. For some applications, molded plastic fixtures have been used; however, care must be exercised that the yield strength of this material is not exceeded during the shock test. Magnesium alloys with maximum damping characteristics may be used, in which case, the fixture may be designed so that $Dp \geq 3\ Tf$. Avoid cantilevered and bolted construction since a significant increase in fixture resonant period results. If the fixture cannot be fabricated from solid stock, then casting is the preferable formation. Welded construction is acceptable. For welded plate construction, a plate thickness of at least one inch is desirable. Flat plate fixtures should also have a minimum thickness of one inch.

c. Tiedown Bolts -- Specific requirements for fixture tiedown bolts are described in Reference 4Y and are summarized here. The bolt holes in jigs or fixtures should be counterbored so that the length between the bottom of the bolt head and engagement of the bolt threads into the shock table is kept at a practical minimum. A compromise must be made between minimum exposed bolt length and strength of the shoulder under the bolt so that the resilience is sufficient. The fixture material under the bolt head should be kept about two to four times the bolt diameter. The bolt material should be of steel. The pattern of bolts, span between bolts, and bolt size generally are fixed by the shock table tiedown arrangement. The maximum number of bolts should be used to fasten the fixture to the shock table. All bolted connections should be torqued to the values indicated in Table D-1.

Table D-1. Recommended Torque for Fixture Bolted Connections*

Screw Size	Torque (inch-pounds)	Torque (foot-pounds)
#3	7	
#4	10	
#5	15	
#6	20	
#8	30	
#10	40	
#12	50	
1/4-inch	70	
5/16-inch	120	10
3/8-inch	300	25
7/16-inch	350	29
1/2-inch	600	50
5/8-inch	1000	83
3/4-inch	2000	167
7/8-inch	3000	250
1-inch	5000	415

*Note: All values are for steel bolts whose minimum thread engagement is 1 1/2-bolt diameters when threaded into steel and 2 1/2- to 3-bolt diameters when threaded into aluminum.

APPENDIX E

SHOCK ENVIRONMENT SIMULATION

Shock environment simulation tests involve reproducing the particular shock environment associated with the test specimen. Simulation of the shock environment is inherently more difficult, expensive, and time consuming than testing in accordance with arbitrary specifications since it is necessary to measure the shock environment. This is particularly true when the environment desired is associated with missile flight. Figure E-1 is a block diagram of a typical inflight shock measurement data acquisition system.

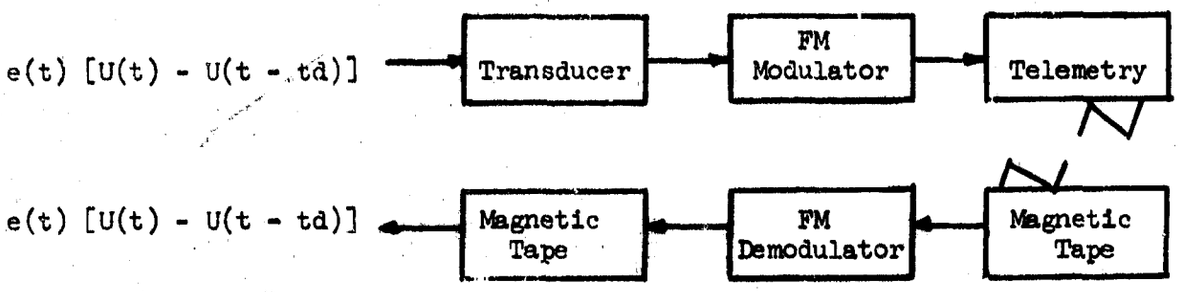

Figure E-1. Typical Inflight Data Acquisition System

The mathematical representation e(t)[U(t) - U(t - td)] represents the measured shock pulse whose duration is td. The objective of the simulation shock test is to reproduce this shock pulse as an input to the test specimen. The response of the test specimen, possible failures, etc., can then be closely monitored under laboratory conditions. The test can be repeated, thus providing data for a statistical study of the mean effects. The problem of reproducing the exact e(t)[U(t) - U(t - td)] in the laboratory has never been satisfactorily solved. Attempts have been made to use randum vibrations (see Reference 4Q) to reproduce the exact measured shock pulse input to the system. However, these facilities are limited in their output magnitude and are susceptible to damage.

APPENDIX F

EQUIVALENT TESTING CONCEPTS

The shock spectra concept and the derivation of the shock test from shock spectra concept, which describe the equivalent testing concept, are as follows:

a. Shock Spectra Concept -- Shock spectra which were originally developed to compare the severities of earthquakes are used in the analysis of mechanical systems. Shock spectra do not describe the transient motion. [illegible] e(t) [U(t) - U(t - td)]; a shock spectrum gives the structural response across the frequency range of interest when a system is excited by e(t) [U(t) - U(t - td)]. A simplified diagram of the shock spectra concept is shown in Figure F-1.

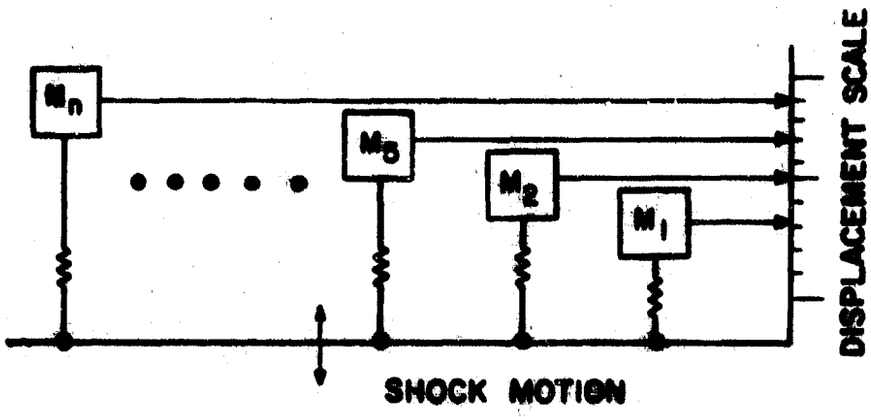

Figure F-1. Shock Spectra Concept Simplified Diagram

Each of the undamped single degree of freedom systems has, by definition, a different natural frequency so that f_1 corresponds to the system with mass M_1, and f_2 corresponds to the system with mass M_2,...f_n corresponds to the system with mass M_n. The shock spectrum is generated by determining the maximum displacement responses of each of the simple systems when excited by the transient motion. The maximum velocity or acceleration responses are determined by multiplying the displacement responses by $2\pi f$ and $(2\pi f)^2$, respectively. In general, the systems are considered to be undamped although several investigations have been concerned with shock spectra when damping is introduced into the system. If damping is present, it is necessary to compute the velocity and acceleration responses directly since multiplication of the displacement response by $2\pi f$ and $(2\pi f)^2$ to obtain velocity and acceleration is no longer valid. It is evident that calculation of the response of each of the undamped spring mass systems shown in Figure F-1 provides only one positive and one negative value for the shock spectrum curve. A diagram of a typical spring mass system with damping is shown in Figure F-2.

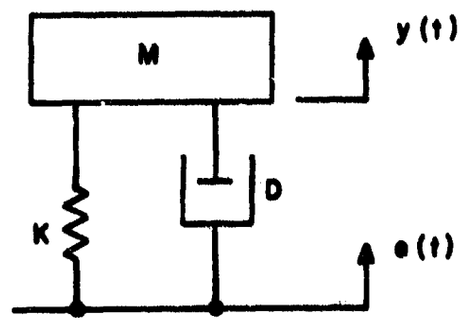

Figure F-2. Typical Damped Spring Mass System Diagram

Here, y(t) is the absolute displacement response of the mass, while e(t) is the absolute displacement forcing function corresponding to the transient shock motion. K is the spring constant (lb/in); D is the damping (lb - sec/in); and M is the mass (lb - sec^2/in). Letting x(t) equal y(t) - e(t), then x(t) is the displacement across the spring and represents the relative motion of the mass with respect to the base. To determine the one positive and one negative point of the shock spectrum, the excursions of x(t) must be calculated as described in paragraph c.

Two definite time periods are of interest in determining the response of a particular simple system. One time period is associated with the response of the system while the excitation e(t) is being applied; (the application of e(t) is fixed by multiplication of the unit gate function e(t) [U(t) - U(t - td)] This is generally called the initial response spectrum. After time, td, oscillation may still occur as a result of the conditions existing at the time the excitation is removed. The response of the system after time, td, is called the residual spectrum. The initial and residual responses of different linear systems excited by a half sine pulse are shown in Figure F-3. As the resonant frequency increases, the residual responses are smaller than the initial responses until, at one particular frequency, complete cancellation of the residual response occurs. All ideal, symmetrical, unidirectional, shock pulse shapes, such as the rectangular pulse and half sinusoidal pulse, contain zero points in their residual spectra at several frequencies. Nonsymmetrical shock pulses, such as the sawtooth pulse do not contain these zero points. The calculated shock spectra for several shock pulse shapes are described in Reference 4B3. Three of these shock pulse shapes (sawtooth, half sinusoidal, and rectangular) frequently are approximated by shock machines. The shock spectra for ideal pulses of these shapes are shown in Figure F-4. On Figure F-4, note that the shock spectra are composed of a plot of the maximum amplitude levels from either the initial or residual responses from each of the series of simple systems shown in Figure F-1. Both the positive and negative responses are plotted. Since the residual shock spectrum defines the maximum value of the free vibrations after td, it gives the response of the system in a direction opposite to that defined by the initial spectrum and in some cases may provide the maximum response in the positive direction as well.

b. Shock Test Derivation Using Shock Spectra Concept -- There are several problems which arise in the derivation of a shock test from the calculated shock spectra. In practice, the shock pulse shapes generated by a shock machine are compromised where instantaneous changes in acceleration are required.

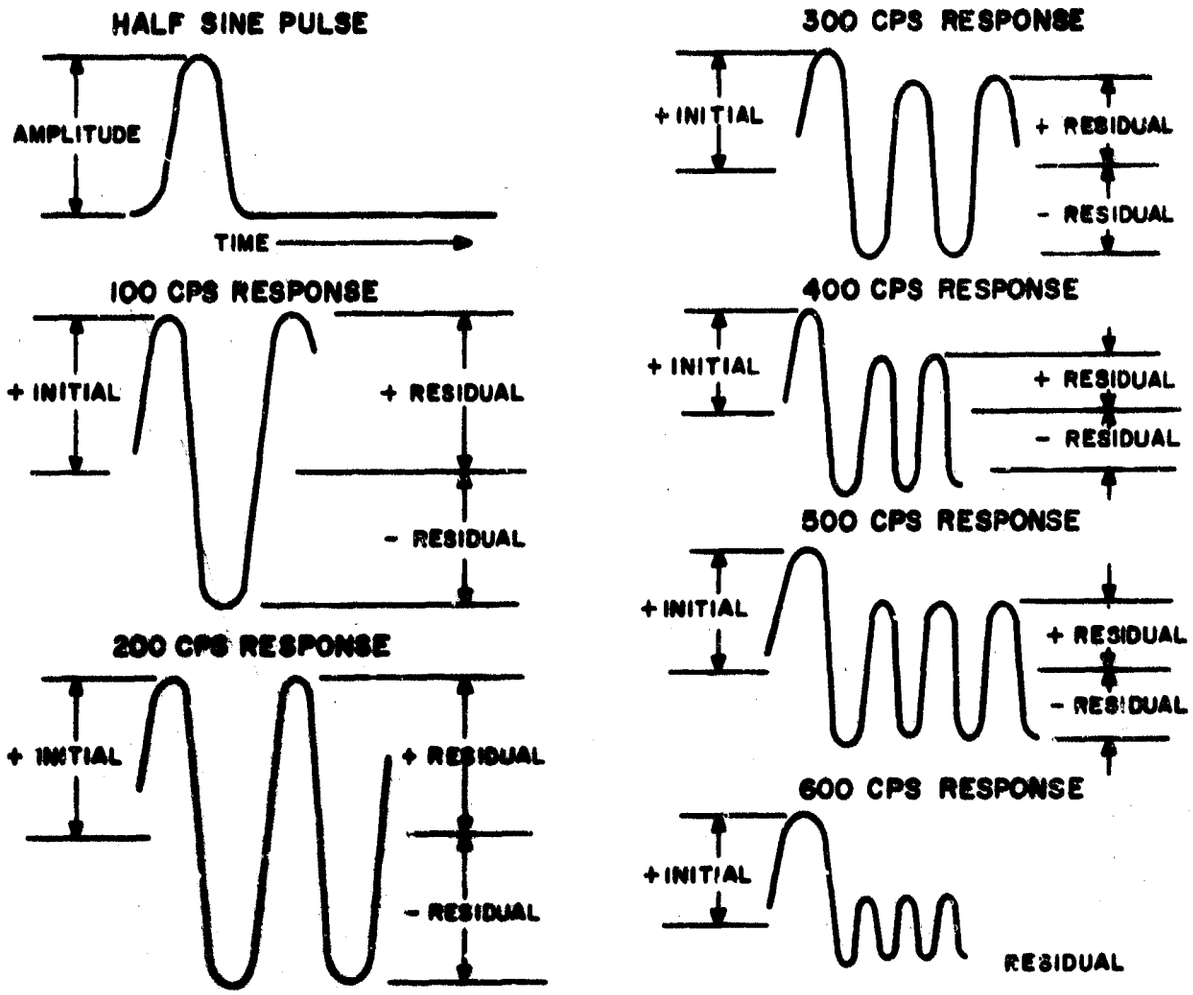

Figure F-3. Typical Responses of Systems to Half Sine Pulse

This causes the high frequency responses to be attenuated and means that equipment which has components with high natural frequencies will not receive an appreciable input from the unidirectional shock pulses. In general, a shock pulse from a particular shock machine is used to generate a shock spectrum whose characteristics approximate the shock spectrum calculated from the service environment. An acceleration time history which represents measurements collected from a surface-to-air missile, during the initial boost phase, is shown in Figure F-5.

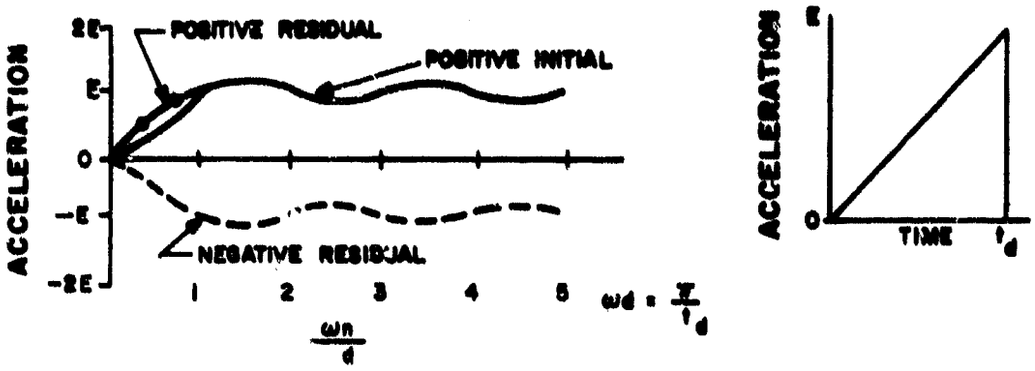

SHOCK SPECTRA FOR IDEAL SAWTOOTH PULSES

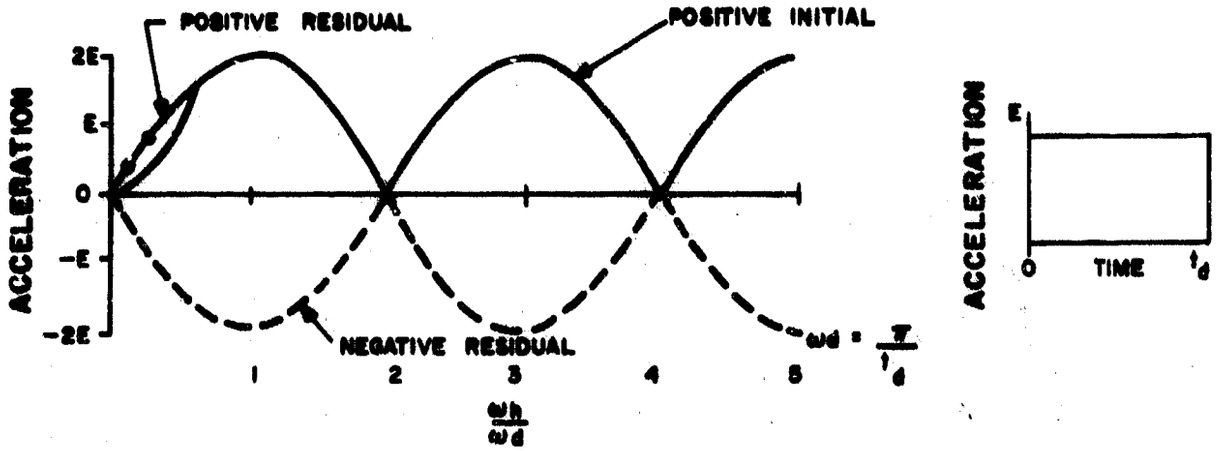

SHOCK SPECTRA FOR IDEAL RECTANGULAR PULSES

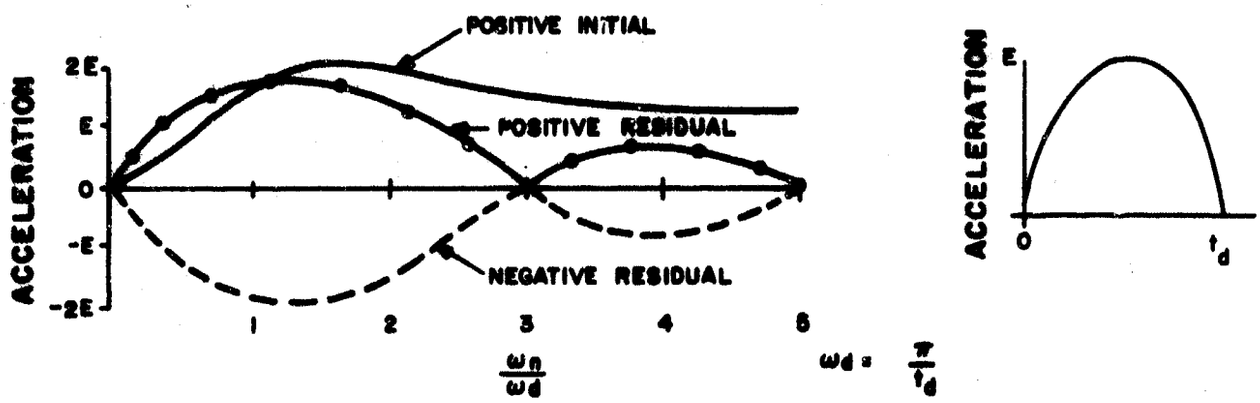

SHOCK SPECTRA FOR IDEAL SAWTOOTH PULSES

Figure F-4. Shock Spectra for Three Ideal Pulse Shapes

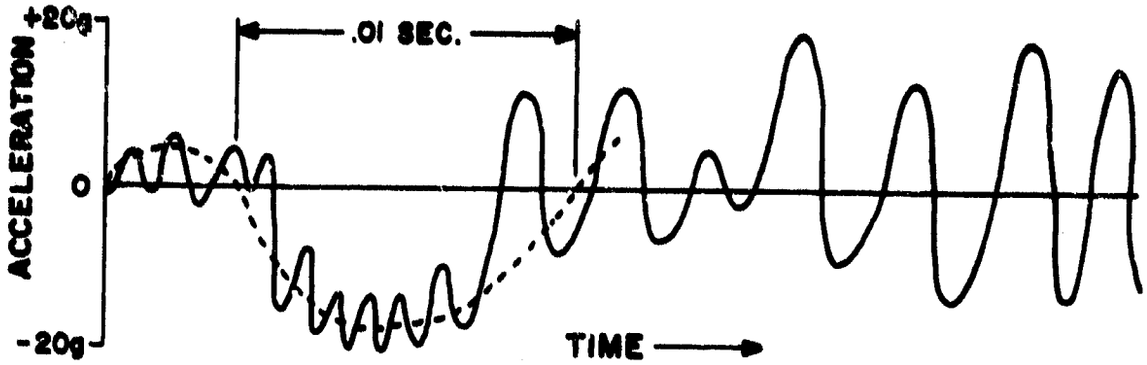

Figure F-5. Typical Missile Acceleration Time History

The shock spectrum corresponding to this time history was calculated using the digital computer program described in Reference 4R, and is shown in Figure F-6. The negative portion of this shock spectrum is due to the residual responses of the simple undamped systems. The positive portion of the shock spectrum is due to the maximum level occurring during either the initial or residual portions of the system responses. Note that the positive and negative spectra in Figure F-6 are almost mirror images of each other and that, above 50 cps, the response level is approximately constant. This means that the shock motion shown in Figure F-5 will excite all systems with natural frequencies from 50 cps to at least 500 cps, at an equal level.

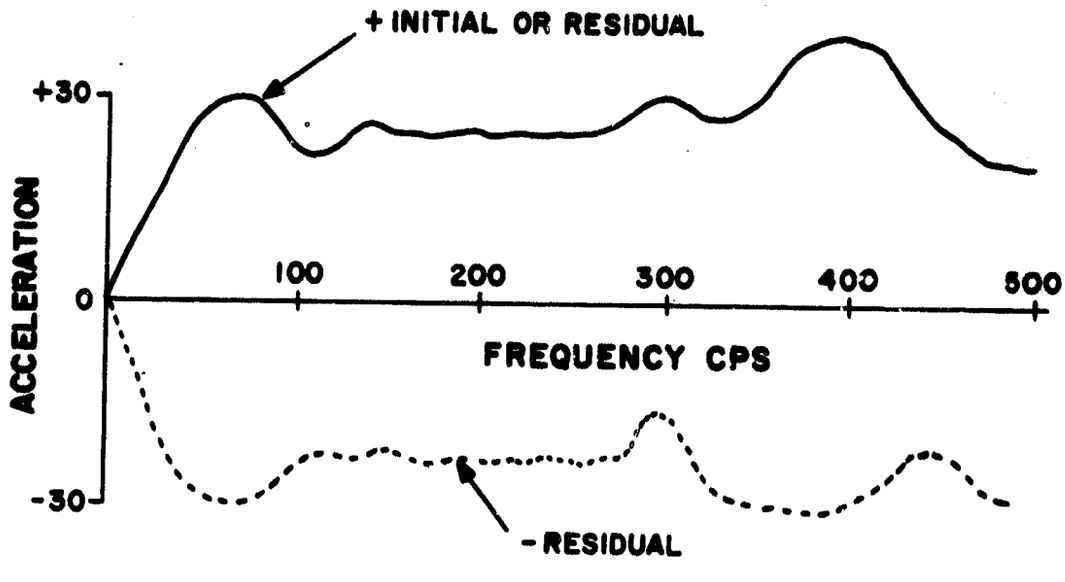

Figure F-6. Missile Boost Phase Shock Spectrum

To find the approximate shock pulse generated by a shock machine which has the same severity as the shock spectrum shown in Figure F-6, the shock spectrum is compared with the ideal shock spectra shown in Figure F-4. The pulse that will generate a shock that has approximately the same severity as the booster shock, is a sawtooth pulse with a peak acceleration of 32 g's and a duration of 12.5 milliseconds. Figure F-7 shows both of these spectra for comparison purposes.

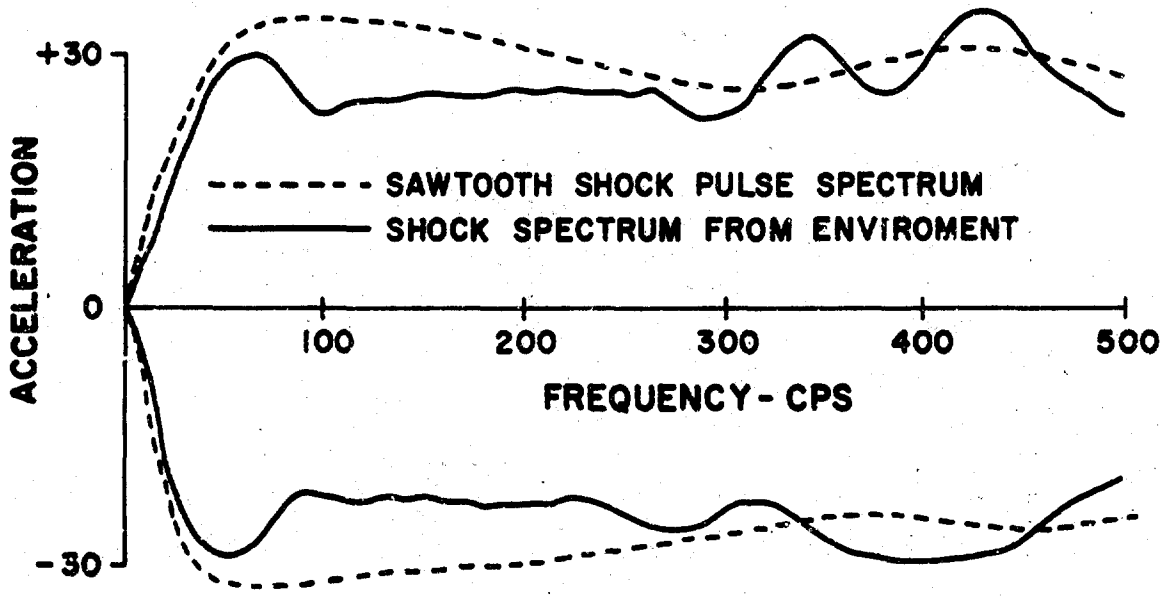

Figure F-7. Comparison of Sawtooth and Missile Environment Shock Spectra

Thus, for a first approximation, a shock spectrum from Figure F-4 can be selected to approximate the calculated shock spectrum from service. Notice that the shock spectra concept was developed with the supposition that the equipment is a simple, single degree of freedom system. When this restriction is removed, the comparison of Figure F-7 is even less accurate. However, shock spectra comparisons are valid, within limits, as long as one mass predominates; i.e., one mass is large relative to all other masses.

c. Data Reduction -- The excursions of x(t), [i.e., y(t)], of paragraph a are calculated by using the following linear differential equations (see References 4B2 and 4Z):

$$M \frac{d^2y}{dt^2} + D \frac{dy}{dt} - D \frac{de}{dt} + Ky - Ke = 0 \qquad (1)$$

$$\frac{d^2y}{dt^2} + \frac{D}{M} \frac{d(y - e)}{dt} + \frac{K}{M} (y - e) = 0$$

Rearranging equation (1) and substituting $2N\omega_n = D/M$ and $K/M = \omega_n^2$ (obtained from simple theory of oscillating systems), equation (2) is obtained:

$$\frac{d^2x}{dt^2} + 2N\omega_n \frac{dx}{dt} + Kx = -M \frac{d^2e}{dt^2} \tag{2}$$

where:

N = D/Dc ratio of damping to critical damping

ω_n= natural frequency of system

Equation (2) is solved using the Laplace transform method to derive equation (3).

$$S^2 \underline{\bar{X}}(S) - S\,X(0) - \dot{X}(0) + 2N\omega_n\,[S\,\underline{\bar{X}}(S) - X(0)] + \omega_n^2\,\underline{\bar{X}}\,(S) = -L[\ddot{e}(t)] \tag{3}$$

Assuming that the mass is originally at rest so that $x(o) = -e(o)$ and $\dot{X}(o) = -\dot{e}(o)$ and solving for $\underline{\bar{X}}(S)$ (Laplace transform of $x(t)$), equation (4) is obtained.

$$\underline{\bar{X}}(S) = -\frac{(S+2N\omega_n)e(o) - \dot{e}(o) - L[\ddot{e}(t)]}{S^2 + 2N\omega_n\ S + \omega_n^2} \tag{4}$$

Letting $\omega_d = \omega_n\ (1 - N^2)^{\frac{1}{2}}$ and inverse transforming, the solution for the displacement across the spring with respect to time is given in equation (5).

$$x(t) = -\epsilon^{-N\omega_n t}\,[e(o)\,(\cos\omega_d t + \frac{N\omega_n}{\omega_d}\ \sin\omega_d t + \frac{\dot{e}(o)}{\omega_d}\ \sin\omega_d t \tag{5}$$

$$-\int_0^t \frac{\ddot{e}(\tau)\epsilon^{-N\omega_n(t-\tau)}}{\omega_d}\ \sin\omega_d(t-\tau)\ d$$

The integral is the convolution integral and τ is a dummy variable. To obtain the velocity, equation (5) must be differentiated once with respect to time. Acceleration is obtained by differentiating twice with respect to time. In general, the systems are considered to be undamped so that setting N=o, equation (5) then reduced to equation (6).

$$x(t) = -e(o)\cos\omega_n t - \frac{\dot{e}(o)}{\omega_n}\ \sin\omega_n t - \int_0^t \frac{\ddot{e}(\tau)\ \sin\omega_n\ (t-\tau)d\tau}{\omega_n} \tag{6}$$

and velocity and acceleration are now obtained by multiplying $x(t)$ by $(2\pi f)$ or $(2\pi f)^2$ respectively, where $\omega_n = 2\pi f$. If damping is included, the acceleration response is written as shown in equation (7)

$$\ddot{x}(t) = e(o)\epsilon^{-N\omega_n t}\left[\left\{(N\omega_n)^2 + (\omega_d)^2\right\}\cos\omega_d t - \left\{\frac{(N\omega_n)^3}{\omega_d} - N\omega_n\omega_d\right\}\sin\omega_d t\right]$$

$$+ \dot{e}(o)\epsilon^{-N\omega_n t}\left[\frac{(\omega_d)^2 - (N\omega_n)^2}{\omega_d}\sin\omega_d t + 2N\omega_n\cos\omega_d t\right]$$

$$+ \int_0^t \left[\ddot{e}(\tau)\,\epsilon^{-N\omega_n(t-\tau)}\left\{\frac{(\omega_d)^2 - (N\omega_n)^3}{\omega_d}\sin\omega_d(t-\tau) + 2N\omega_n\cos\omega_d(t-\tau)\right\}\right]d\tau$$

(6) and (7) are most easily solved using an analog or digital computer. Reference 4R describes a method of computing the shock spectrum given that $\ddot{e}(t)$ is an arbitrary time function capable of being converted into digital format. This calculation is usually performed using a digital computer; however, solutions are also possible using an analog computer except that difficulty may be encountered in generation of the $\ddot{e}(t)$ input function at the higher frequencies. The function $x(t)$ is generated and/or calculated over a sufficient time period to determine the positive and negative maxima. This process is repeated for each spring mass system until the shock spectrum is generated over the frequency range of interest.

GLOSSARY

1. Mechanical Shock: A nonperiodic excitation of a mechanical system that is characterized by suddeness and severity, and causes significant relative displacements in the system.

2. Shock Spectrum (Response Spectrum): A plot of the maximum response experienced by a single degree of freedom system, as a function of its own natural frequency, in response to an applied shock.

3. Shock Pulse: A substantial disturbance characterized by a use of acceleration from a constant value and decay of acceleration to the constant value in a short period of time.

4. Shock Instrumentation: Electronic measuring devices used to translate mechanical shock motions into voltage response versus time.

5. Jigs and Fixtures: A massive or relatively heavy series of plates or castings whose purpose is to fasten the test specimen to the laboratory shock machine.

6. Mechanical Impedance: The ratio of a force-like quantity to a velocity-like quantity when the arguments of the real (or imaginary) parts of the quantities increase linearly with time.

7. Natural Frequency: The frequency of free vibration of a system.

8. Shock Failure:

a. Intermittent Failure - A failure caused by the relative motions of components and parts whose operational properties are sensitive to position. After the shock disturbance ceases, the failure disappears.

b. Catastrophic Failure - A failure caused by exceeding the strength of components or structures. A permanent deformation results, and the failure remains after the disturbance is removed.

9. Degrees of Freedom: The minimum number of independent coordinates required to define completely the positions of all parts of a mechanical system at any instant of time.