RADC-TR-71-74

SEMI-ANNUAL TECHNICAL REPORT

1 July 1970 — 31 December 1970

GRAPHICAL MAN/MACHINE COMMUNICATIONS

AD725102

Sponsored by
Advanced Research Projects Agency
ARPA Order No. 829

Contractor: University of Utah
Contract Number: F30602-70-C-0300
Effective Date of Contract: 1 July 1970
Contract Expiration Date: 31 May 1971
Amount of Contract: $1,413,419.00
Program Code Number: 6D30
Principal Investigator: David C. Evans
Phone: (801) 322-8224
Project Engineer: Murray Kesselman
Phone: (315) 330-2382

DDC
RECEIVED
JUN 21 1971
B

This document has been approved for public release and sale; its distribution is unlimited.

The views and conclusions contained in this document are those of the authors and should not be interpreted as necessarily representing the official policies, either expressed or implied, of the Advanced Resarch Projects Agency or the U. S. Government.

ROME AIR DEVELOPMENT CENTER
AIR FORCE SYSTEMS COMMAND
GRIFFISS AIR FORCE BASE, NEW YORK

Reproduced by
NATIONAL TECHNICAL
INFORMATION SERVICE
Springfield, Va 22151

41

ACCESSION for
CFSTI WHITE SECTION
DDC BUFF SECTION
UNANNOUNCED
JUSTIFICATION
BY
DISTRIBUTION/AVAILABILITY CODES
DIST. AVAIL. and/or SPECIAL
A

When U. S. Government drawings specifications, or other data are used for any purpose other than a definitely related government procurement operation, the government thereby incurs no responsibility nor any obligation whatsoever; and the fact that the government may have formulated, furnished, or in any way supplied the said drawings, specifications, or other data is not to be regarded, by implication or otherwise, as in any manner licensing the holder or any other person or corporation, or conveying any rights or permission to manufacture, use, or sell any patented invention that may in any way be related thereto.

GRAPHICAL MAN/MACHINE COMMUNICATIONS

David C. Evans

University of Utah

Details of illustrations in
this document may be better
studied on microfiche

This document has been approved
for public release and sale; its
distribution is unlimited.

This research was supported by the
Advanced Research Projects Agency
of the Department of Defense and was
monitored by Murray Kesselman, RADC
(ISCA), GAFB, N.Y. 13440, under contract
F30602-70-C-0300.

UNCLASSIFIED
Security Classification

DOCUMENT CONTROL DATA - R & D

(Security classification of title, body of abstract and indexing annotation must be entered when the overall report is classified)

1. ORIGINATING ACTIVITY *(Corporate author)* University of Utah Salt Lake City, Utah 84112	2a. REPORT SECURITY CLASSIFICATION Unclassified 2b. GROUP None

3. REPORT TITLE

GRAPHICAL MAN/MACHINE COMMUNICATIONS

4. DESCRIPTIVE NOTES *(Type of report and inclusive dates)*

Semi Annual Technical Report for period 1 July 1970 to 31 December 1970.

5. AUTHOR(S) *(First name, middle initial, last name)*

David C. Evans

6. REPORT DATE March 1971	7a. TOTAL NO. OF PAGES 36	7b. NO. OF REFS 8

8a. CONTRACT OR GRANT NO. F30602-70-C-0300 b. PROJECT NO. ARPA Order No. 829 c. Program Code Number 6D30 d.	9a. ORIGINATOR'S REPORT NUMBER(S) 9b. OTHER REPORT NO(S) *(Any other numbers that may be assigned this report)* RADC-TR-71-74

10. DISTRIBUTION STATEMENT

This document has been approved for public release and sale; its distribution is unlimited.

11. SUPPLEMENTARY NOTES Monitored by Rome Air Development Center, ISCA, Griffiss Air Force Base, New York 13440	12. SPONSORING MILITARY ACTIVITY Advanced Research Projects Agency Washington, D.C. 20301

13. ABSTRACT

~~This~~ The document includes a summary of research activities and facilities at the University of Utah. ~~under Contract F30602-70-C-0300~~. Report abstracts convey important research milestones attained during this period by each of the four major research activities:

1. Computer Graphics Techniques;
2. Computing Systems;
3. Digital Waveform Processing;
4. Applications.

DD FORM 1 NOV 65 1473

UNCLASSIFIED
Security Classification

14. KEY WORDS	LINK A ROLE	LINK A WT	LINK B ROLE	LINK B WT	LINK C ROLE	LINK C WT
algorithms						
computer animation						
computing systems						
DCPL (Distributed Control Programming Language)						
digital waveform processing						
graphics techniques						
half-tone pictures						
image enhancement						
LDS-1 (Line Drawing System-1)						
musicational						
nonlinear filtering						
picture processor						
POT (Picture Oriented Technique)						
quadric patches						
real-time modeling						
three-dimensional						
tree structures						

FOREWORD

PUBLICATION REVIEW

This technical report has been reviewed and is approved.

Murray Kesselman
RADC Project Engineer

TABLE OF CONTENTS

	Page
Title Page	i
Foreword	ii
List of Figures	iv
PART I. SUMMARY OF RESEARCH ACTIVITIES	1
A. Computer Graphics Techniques	2
Display Processor Software	2
Watkins' Processor	7
Computer Animation of Halftone Images	7
DCPL -- A Distributed Control Programming Language	8
B. Computing Systems	10
Experimental Computer Laboratory	10
Education and Music	11
C. Digital Waveform Processing	15
D. Applications	20
Electronic Circuit Analysis Program (ECAP)	20
Visible Surface Algorithms for Quadric Patches	21
Optimal Control of a Process with Discrete and Continuous Decision Variables	25
Empirical Modeling of Occurrence of Severe Weather Events	26
Heuristic Interactive Synthesis of Cellular Arrays Based on Polish Notation	27
PART II. FACILITIES	29
PART III. PUBLICATIONS AND PRESENTATIONS	30
BIBLIOGRAPHY	33
DD1473	34

LIST OF FIGURES

		Page
FIGURE 1	LDS-1 Equipment Layout	4
2	POT (Picture Oriented Technique) Data Structure	6
3	The Musicational Tool	13
4	Typical Black and White High Quality Digital Output	18
5	Typical Black and White High Quality Digital Output	19
6	Intersecting Cylinders	23
7	Cup and Saucer	24

PART I. SUMMARY OF RESEARCH ACTIVITIES

The overall research objective of the graphical man/machine communication effort is the development of computers and computing techniques that people may use interactively in real time to extend their problem-solving capability and to work cooperatively by means of improved communications via computer. The research may be partitioned into four major activities which, although they will be described separately here, are closely related, and in several cases, senior investigators are active in more than one of these areas. The areas are: 1) computer graphics techniques, 2) computing systems, 3) digital waveform processing, and 4) applications.

Consistent with our previous method of reporting, brief overall objectives of each major research area are given along with highlights of significant research findings that occurred during the report period.

A. COMPUTER GRAPHIC TECHNIQUES

The senior investigators in computer graphic techniques are David C. Evans (faculty), Ivan E. Sutherland (faculty), Ronald D. Resch (faculty) and Robert E. Stephenson (faculty). There are two aspects of this research: 1) the development of graphics systems that are readily accessible to computer system users and that may be easily used by them for practical applications, e.g., graphic programming languages and the representation of information for graphic systems; and 2) the development of primary graphic techniques for the realistic dynamic display of three-dimensional objects.

Efforts are directed to the solution of computational problems of real-time windowing, perspective transformations, hidden-surface elimination, and the production of shaded color representations of photograph-like quality. Emphasis is placed upon the capability of the user to interact with the structured data representation of the object being viewed by the graphic system, rather than emphasizing the graphic system as a picture generator by itself.

Display Processor Software

The recent procurement of the Control Unit of an LDS-1 (Line Drawing System - 1) graphics display processor to control the Harvard University prototype of the Matrix Multiplier and the Clipper-Divider (although a great improvement over our previous graphics hardware), left a gap in our graphics software. For this reason, a new project was undertaken -- the design and implementation of a new graphical software system.

The display processor is an independent computer oriented towards graphical display of three dimensional data. It shares memory with our general purpose computer -- the PDP-10. The display processor is composed of several functional units. The first is the channel controller which communicates with memory and decodes the display processor instructions for the other functional units. Connected to the display processor controller is a matrix multiplier which is used for transforming three dimensional data described in homogeneous coordinates. Next in line is the clipper-divider. The clipper's function is to check all lines trying to be displayed to make sure they lie in the viewer's defined window. If a line crosses the viewer's window, the clipper-divider will generate a new line which lies completely inside the window. The display processor system is completed with the addition of the line generator and scope, and the system has the capability to write transformed data back into memory at any time in this chain.

The PDP-10 and the display processor communicate via an I/O bus and run asynchronously, each machine executing its own programs out of a shared memory. Because this graphical computation (which was previously done in software on the PDP-10) is now computed in hardware on an independent processor, the speed and flexibility of our graphical capability is greatly improved. A lay-out of the new equipment is shown in Figure 1.

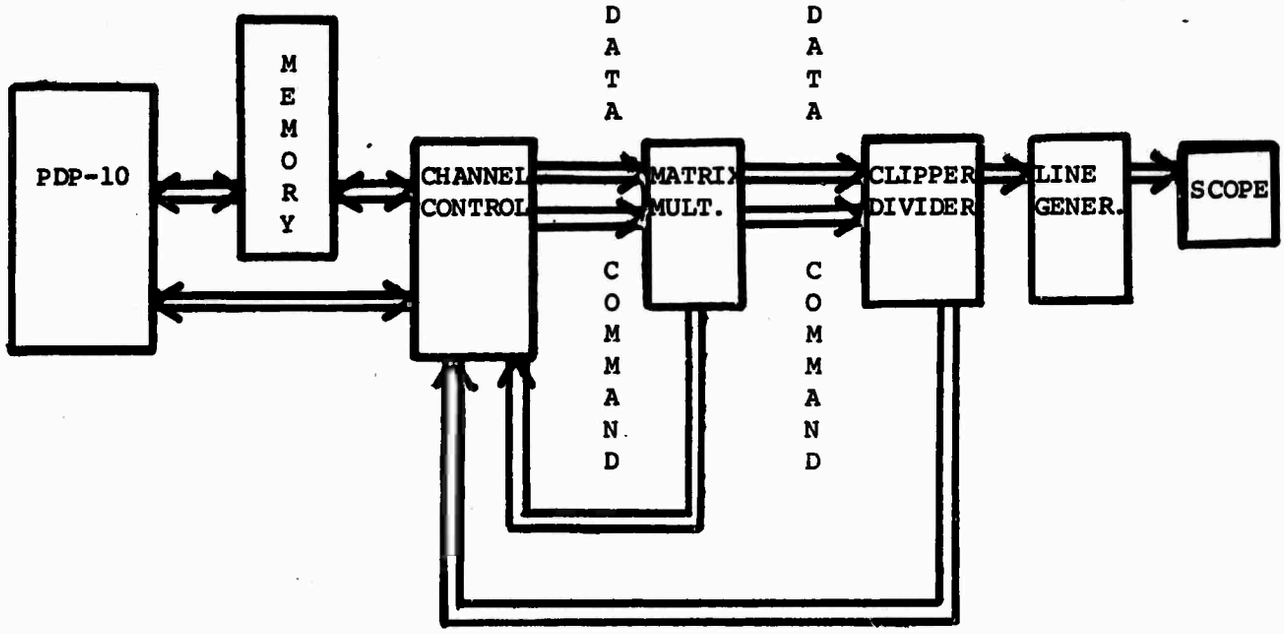

Figure 1

POT (Picture Oriented Technique), the software system designed for this new hardware, utilizes generalized graphical procedures that for any instance of an object will point to a given set of data. For example, there may be a procedure which draws any arbitrary rectangle given its left-bottom and right-top points. Then in POT there exists only one copy of this pure procedure which may be referenced several times; each time associated with a different set of coordinate values.

Because of this design, a user calls these graphical procedures with a pointer to the data in his own area of core. Then he can, at will, access and change this data with an immediate resulting change in the display. This capability is unique to this particular display processor system.

Another aspect of this display system is the ability to build structured display processes on the PDP-10 that are later executed on the display processor. This is accomplished by using a feature called

"display files." Display files are segments of memory controlled by POT which are filled with references to graphical library procedures and to other display files. Given the facility to reference other display files, one can easily imagine the construction of a tree-structured display process. This ability is highly desirable and unusual in most installations which use graphics as a medium.

Figure 2 shows a simplified view of the POT data structure residing in memory. The display processor is instructed to start at the beginning address of the display table. The display table contains appropriated transfers through the reference table to the actual display files. The display files in turn contain the display processor instructions necessary to point to the data and transfer to the pure graphical procedures. At the end of any display file is a return to the display table, which then starts the execution of the next display file. Because all display files are referenced by name, a hash table has been provided for the internal use of POT.

POT contains all the necessary commands to create, build, merge, display, blank, and delete display files.

These facilities give the user a more abstract representation of what he wants to display, relieves him of many restrictions found in most graphical systems, and gives him an easier, more understandable approach to displaying information.

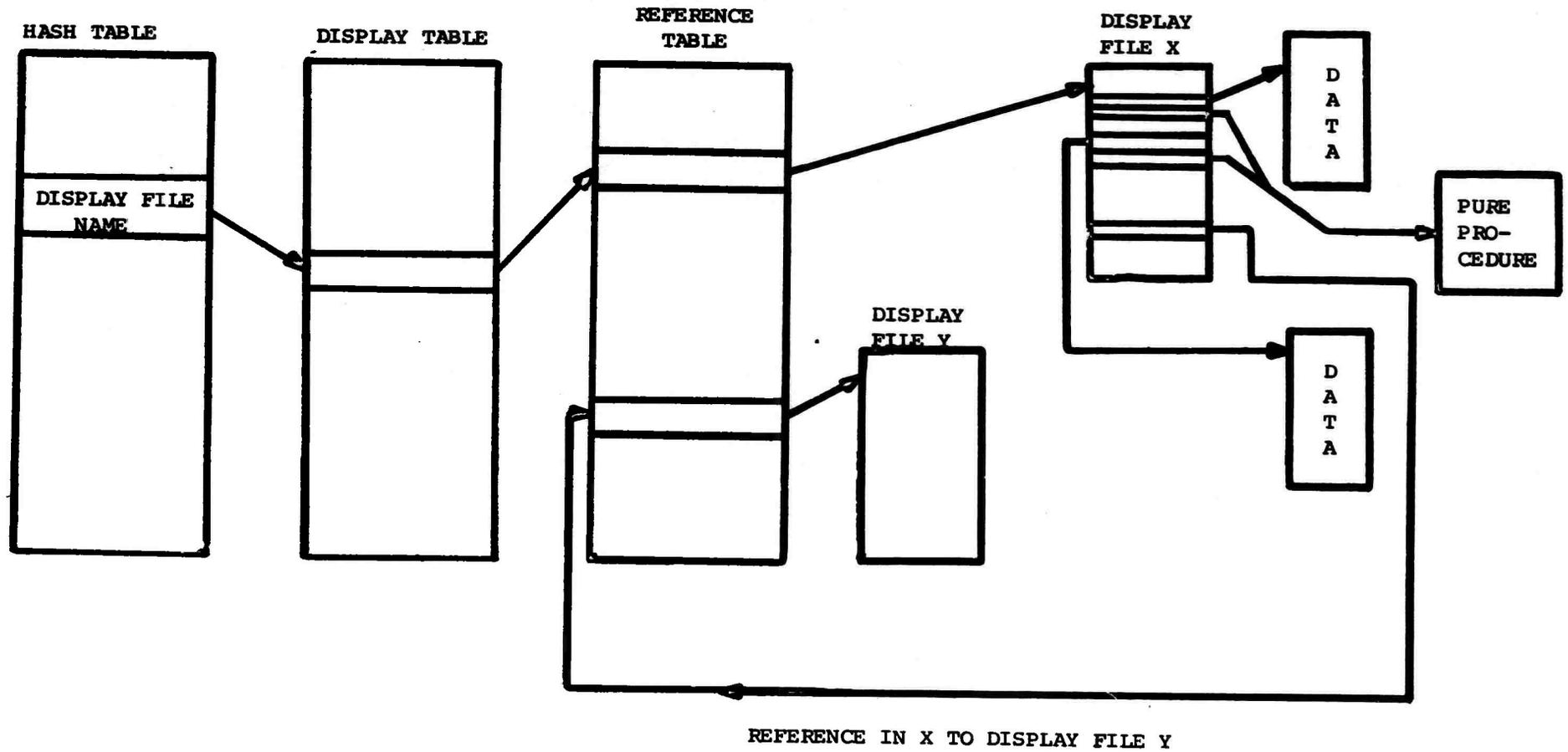
HASH TABLE
DISPLAY FILE NAME
DISPLAY TABLE
REFERENCE TABLE
DISPLAY FILE X
DISPLAY FILE Y
D A T A
D A T A
PURE PRO- CEDURE
REFERENCE IN X TO DISPLAY FILE Y

Figure 2

Watkins' Processor

This processor is the hardware implementation of the half-tone visible surface algorithm Dr. Watkins used for his recent dissertation[1]. It is a direct memory access processor that reads "EDGE DESCRIPTIONS" of polygons used to model objects defined in the PDP-10 memory. With these "EDGE DESCRIPTIONS" the processor uses a raster approach to determine which surfaces are visible in the picture. The visible surfaces are then displayed on a raster driven cathode ray tube.

Currently, Dr. Watkins (research associate), Mr. LeBaron (research engineer), and a part time student draftsman are working on the project. The machine has been simulated on the PDP-10, and the general hardware layout of the 12 different circuit boards has been completed. The artwork is beginning on those boards. A semi-conductor random access memory (256 words by 300 bits) has been ordered from Fairchild Semiconductor, and will be delivered in January 1971. Within three to four months, the processor should be completed and displaying half-tone pictures in real time.

Computer Animation of Halftone Images

A computer animation technique has been developed under the guidance of Dr. Robert S. Stephenson for generating halftone, shaded, perspective images of solid objects in color. This technique has been applied successfully to the production of animated movies. The process is completely automatic and once programmed, requires no intervention

by the operator. The film is advanced, the shutter is opened and closed, the color filters are positioned and the images are generated all under computer control.

Movies have been made of objects disassembling into component parts as well as reassembling, translating in three dimensions, rotating, dissolving, and accelerating. Movies have also been made of tumbling solid objects breaking into constituent parts and the distortion of models of molecules and atoms as they are distorted by thermal and mechanical stresses. Work is progressing on the animation of distorting surfaces.

DCPL - A Distributed Control Programming Language

A unique programming concept was recently created by Denis D. Seror and published as a technical report[2]. In most higher level programming languages, certain linear dependency exists where certain items depend on another, etc. and adherence to programming rules must be followed in rigid sequence. Dr. Seror's thesis, however, depicts a language, Distributed Control Programming Language (DCPL), in which a computation is considered a system of asynchronously cooperating "independent" programs (coroutines) linked by paths of information along which messages are sent. A tree-structured representation and a very dynamic binding give to a DCPL program the flexibility of the highest level programming languages together with the potential of concurrency of the asynchronous computational structures. This method eliminates the stipulation of executions that are forced upon the programmer by the language and allows him to work in a much freer mode.

The locality of references which is exhibited in any DCPL program allows a new computer organization using sequential storage devices with large transfer rate instead of random-access storage devices with relatively low transfer rate. Moreover, the computer is expected to achieve a large throughput by taking the parallelism into account. The machine organization necessary to utilize DCPL is currently being simulated on the PDP-10, and plans to implement it on the system are under way.

B. COMPUTING SYSTEMS

Computing systems senior investigators are: Robert S. Barton (faculty), Roy A. Keir (faculty), and Charles L. Seitz (faculty). This rather diverse set of investigators have as their common interest real computing systems with radically improved characteristics for direct use by people, such as: communication devices, simulation and modeling devices, and computational instruments. Emphasis is not primarily on raw computational capacity, but rather on system problems of the direct use of these machines by people in a natural way so that procedures may be easily described and information may be simply represented.

Experimental Computer Laboratory

Of interest during this period was the development of an experimental computer laboratory appropriate for real-time modeling of computational systems. Under the direction of Roy A. Keir, specific areas being investigated are computer organization and logical design (address manipulation and data structure handling) and techniques for introducing motion description into the computer for use with computer animation of graphics displays.

The experimental computer organization laboratory is currently engaged in two areas of research. The area of long-range interest is the extension of E. G. Eastman's research into the generalization of data structure representations. The current state is that two-dimensional data structures can be represented in a common rotation whether

laid out as lists, as trees, or as linear text. Programs written for a set of data stored in tree form will behave the same if the data set is transformed into an equivalent list form, and it is now believed that the same statements can soon be made for linear text form. This development is central to a new computer organization to be investigated in this laboratory.

The second area of activity in this laboratory is the development of the hardware for this and other investigations. A staff engineer has been assigned to this laboratory, a technician and student assembler have been hired, and construction is well along on interfaces for several primitive input-output devices (teletype, cassette, and storage CRT). Considerable effort has been devoted to testing, refurbishing, and conversion of a data disk video storage system (left over from an earlier project) for use as an interim backup store for the Meta-4 computer. Software is being developed to run on the time-shared PDP-10 for easy preparation and simulation of micro-programs for the Meta-4 computer.

Education and Music

Our special interest at present is in the design of computing systems for direct human use. Two particular applications are education and music. These application areas are appropriate because the system demands are great, and the researchers have the appropriate background and interest. System solutions to these problems will be of more general use. The education application is an excellent vehicle for computer-mediated communication. The music application involves the use of a computer between the keyboard and the tone generator of an

electronic organ, and we believe it will demonstrate a dramatic extension of symbolic interactive communications with a computer.

Electronic and computer technology has had and will continue to have a marked effect in the field of music. Through the years, scientists, engineers, and musicians have applied available technology to new musical instruments, innovative musical sound production, sound analysis, and musicology. At the University of Utah, we have designed under the direction of Dr. Alan C. Ashton[3], and are implementing a communication network involving an electronic organ and a small computer to provide a tool to be used in music performance, the learning of music theory, the investigation of music notation, and the composition, perception, and printing of music.

With the computer serving as a communication device, the computer-aided music tool is shown in Figure 3. There are many interesting things which can be done with this hybrid configuration; for instance computer assisted learning of music can be investigated, experiments of sensory perception may be carried out, keyboard performance can be studied, and new sounds, rhythms and melodies may be intricately interwoven.

The uses of electronic and computer technology in music were surveyed, and a computer-aided music tool was created which consists of a small computer, electronic organ, and a line-drawing display scope. The computer receives input from a teletypewriter keyboard, the organ keys, and stop tablets. The input information is processed according to stored programs, and output is directed to the organ tone generators, filter selection switches, lights that designate the manual keys,

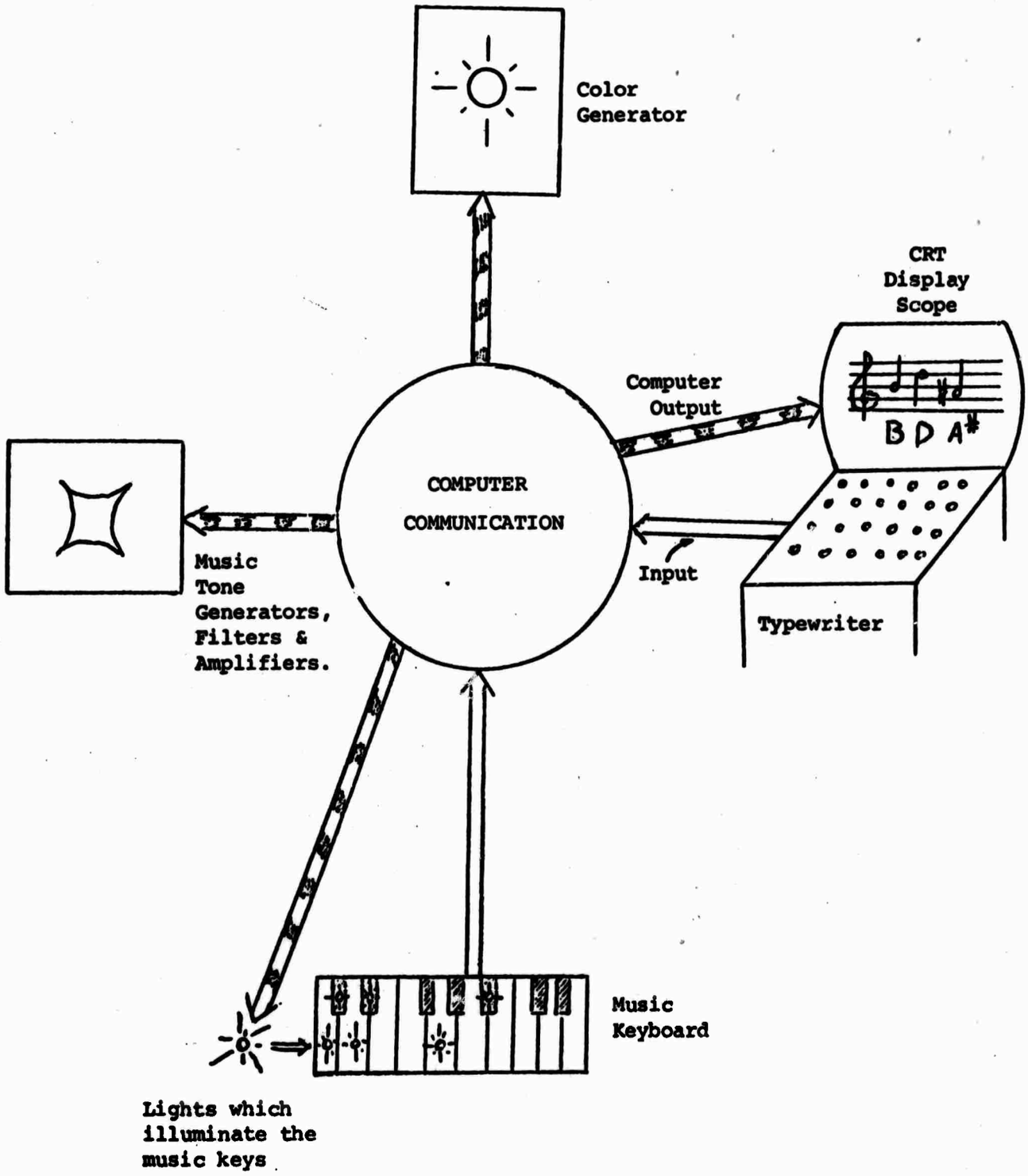

Figure 3

The Musicational Tool

volume control, and the display scope. Thus the organ is full-duplexed through the computer, since the keys are not directly connected to the tone generators, but are linked via the computer. A basic internal representation of stored music is developed which consists of an interpreted file containing a sequence of variable length commands and typed data. Information transfer rates of a secondary storage tape cassette recorder are adequate for most classical organ selections, which may be directly entered into the computer by performance on the manual keyboards and pedals, or keyed-in, note by note, either from another type keyboard or from the organ keys themselves.

The interactive organ-computer communication network allows real time visual, aural, and written response. This makes the musicational tool, as it is called, useful for programmed music courses, computer-aided instruction of music theory, harmony and keyboard performance, and conducting human information processing experiments in the investigation of multi-sensory perception.

C. DIGITAL WAVEFORM PROCESSING

Digital waveform processing research activities under the direction of Dr. Thomas G. Stockham, Jr., in this time period have concentrated primarily on the finalization of previous efforts and the preparation for new ones.

A report is now in progress describing the technical work of Dr. Robert Britton on the application of fast Hadamard transforms to digital waveform processing, especially in the area of picture image enhancement and image coding. Dr. Britton completed his work in August of 1970, and final publication of this report awaits the preparation of high quality reproductions of his processed and original pictures.

Research into the subject of statistical de-reverberation and the removal of noise interference with voice signals has continued during this period. Preliminary study into the possibility of removing scratch-like and hiss-like background noise from voice recordings was undertaken. No conclusive results have as yet been obtained. The study is still under way.

Two major hardware revision activities have taken place during this time period. The first has involved the installation of disk-pack drives on the time-sharing PDP-10, which is the major waveform processing machine. Real-time programs of considerable complexity for coordinating the activities of these disk-packs allow for continuous writing or reading from the disk-pack drives, in coordination with A to D and D to A converters. In cooperation with the time-sharing system monitor, these routines are capable of maintaining continuous uninterrupted real-time audio sampling rates in excess of 35 KHz over indefinite intervals

of time. This capability is essential to our research into the auditory signal processing that we have undertaken and are anticipating.

In June of 1970, we procured a precision display for the purpose of generating continuous tone black and white and color photographs via the single user PDP-10. A great deal of effort has been put into bringing the specifications of performance of this equipment to the level that is satisfactory to our work. Commercially available products are oriented to making line drawings or to participating in conventional rate TV raster-scan imaging. Both of these applications are incompatible with half-tone imagery at the slow rates attendant to digital computer investigations. As a result, considerable redesign effort has been under way during this time period, and has been partially completed. At this time, the equipment is capable of producing a one million picture element black and white picture in 30 seconds. The equipment realizes the full resolution of a 1,024 by 1,024 point raster. By suitable digital methods, the system has been compensated to calibrate with Polaroid Type 52 film, so that the obtained gray scale linearity across the contrast capability of that material is unity gamma within plus or minus .06 density units. This fidelity is comparable to or exceeds that commonly encountered in very high quality color lithography. In interfacing this equipment with the computer, it was necessary to develop special buffering amplifiers and calibration circuits. The equipment presently is capable of medium speed black and white quality work as shown in Figures 4 and 5. Adjustments in the future are required to allow faster operation and employment of colored materials.

On the theoretical side, the last six months have seen efforts towards formalizing work towards the accomplishment of three specific tasks to be completed nominally by the end of May 1971. We have already mentioned the production of a Technical Report on the use of Hadamard functions in image processing. In addition, we are planning to refine and calibrate the black and white visual model (which we developed in fiscal year 1969) beyond the point which was achieved at that time, and to republish a report presenting the refined results and describing uses of the model in a small selection of applications. This study requires the creation of highly calibrated black and white test images. Plans have been completed for the test patterns to be used, and programs are being written to generate them.

In addition, we have been formulating plans for moving ahead with research in the application of homomorphic methods of eliminating acoustic reverberation and resonances in applications other than those involving acoustic restoration.

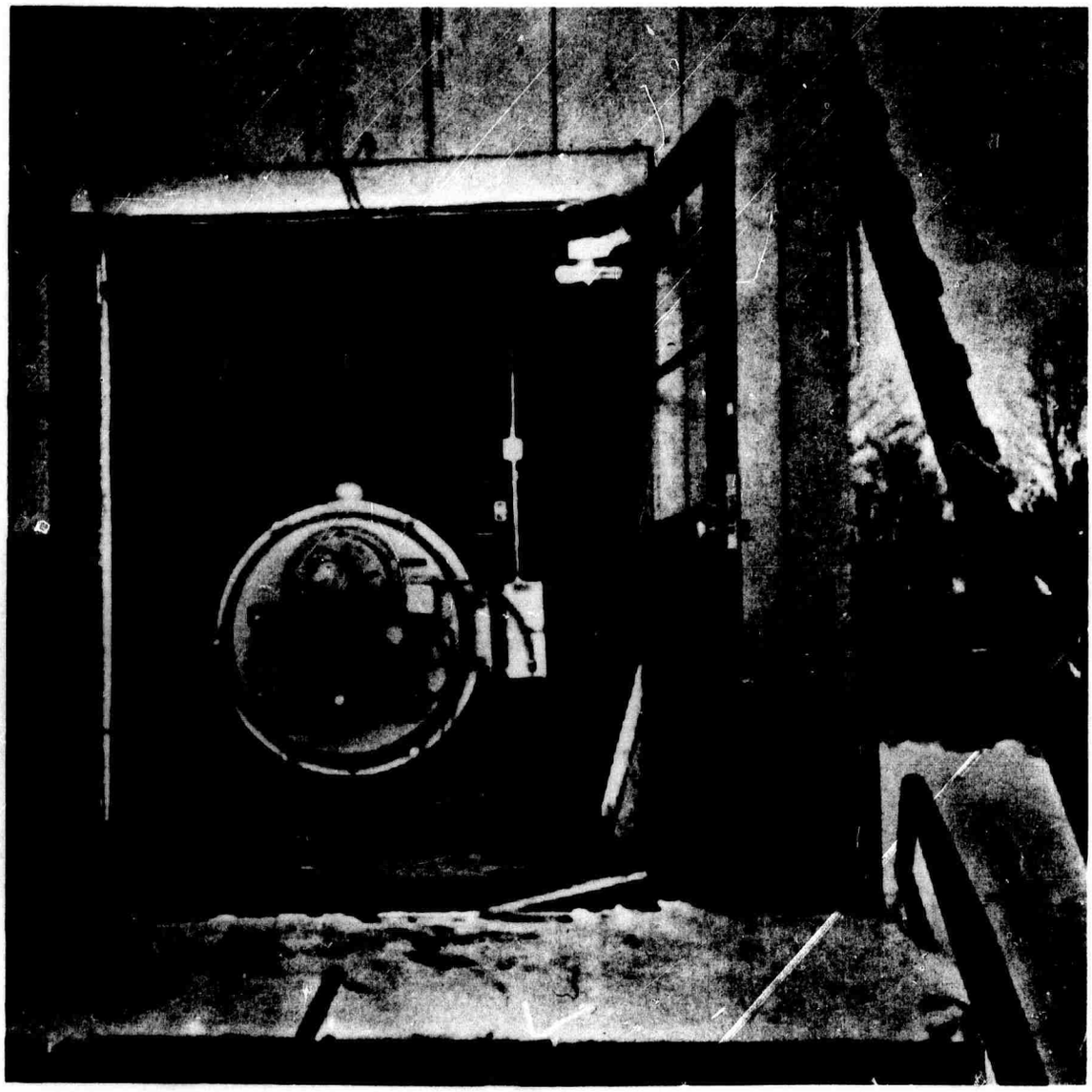

Figure 4: Typical Black and White High Quality Digital Output

Typical 1,024 by 1,024 point raster realizing unity gamma within plus or minus .06 density units.

Figure 5: Typical Black and White High Quality Digital Output

Typical 1,024 by 1,024 point raster realizing unity gamma within plus or minus .06 density units.

D. APPLICATIONS

The applications area includes a small set of carefully selected problem areas that will provide feedback to the researchers in the first three research categories and will provide a mechanism for publication of newly learned techniques to people outside the relatively closed community of computer science researchers.

Involved in the applications activity are Winfred O. Carter (faculty), Henry N. Christiansen (faculty), Harvey S. Greenfield (faculty), Edward R. Perl (Physiology faculty), William J. Hankley (faculty), Louis A. Schmittroth (Adjunct Professor), Robert E. Stephenson (faculty), and Homer R. Warner (faculty). Applications are in the field of computer-aided design, the modeling of complex geometrical structures, the modeling of a collection of fluid-flow problems (including the flow of blood in the human circulatory system), the use of computers in education, and certain information-processing problems in physiology. There are a large number of senior investigators listed in connection with these application problems, but these problems are in the main supported jointly by the University of Utah and other agencies including the National Institutes of Health; hence this work does not represent an unreasonable fraction of the total resources.

Electronic Circuit Analysis Program

An Electronic Circuit Analysis Program (ECAP) has been implemented on the PDP-10 computer. This program will perform DC, AC, and/or transient analysis of circuits comprised of resistors, inductors and capacitors (resistors only for DC analysis), and containing a maximum of 20 nodes and 100 branches. The use of this program as an aid to teaching electric circuit theory has been investigated.

A graphical "front end" has been developed for ECAP. It has been named Utah Circuit Analysis program (UCAP) and permits the user to construct a schematic of a circuit on the screen of a cathode ray tube by means of simple teletype instructions. The graphical representation then becomes the input data to ECAP for analysis. Actually the data structures are built and edited as the schematic is constructed. The ECAP processor then produces its output in data structure representations which can be manipulated by a "back end" processor. Interesting ideas about electric circuit behavior can be displayed this way. Sometimes unconventional aspects of circuit behavior can be studied to reveal new insights not available in more conventional representations. Further studies into this area are continuing.

Visible Surface Algorithms for Quadric Patches

Numerous studies have been devoted to the problem of finding visible portions of surfaces when the surfaces were defined as being planar polygons. Watkins [1] describes one of these algorithms which is quite fast and requires little amount of working storage.

Few successful studies have been made, however, for non-planar surfaces. BE VISION [4] finds the hidden lines when the surfaces are defined by quadratic equations and by quadratic inequalities. Another approach was taken at the University of Utah by Henri Gouraud (graduate student), who approximates Coons' rational cubic surface patches with twisted polygons and then uses Watkins' algorithm in order to find the visible portions of surfaces. In Gouraud's method, the shading point of a surface is obtained by interpolating linearly the exact shading value at the four

corners of the surrounding polygon, thus obtaining a continuous shading function all over a given surface.

While Dr. Robert Mahl appreciated the merits of these previous approaches, he was looking for a method yielding the exact visible contour, intersection lines, and shading functions. To find this, he was forced to limit his investigations to the same type of quadratic surfaces which were used by Weiss [4] in order to limit the computational complexity of the problem to the solution of quartic (fourth degree) polynomial equations. He developed two algorithms which find the visible portions of surfaces in a picture composed of a cluster of three-dimensional quadric patches. A quadric patch is a portion of quadric surface defined by a quadratic equation and by zero, one or several quadratic inequalities. The picture is cut by parallel planes called scan planes; the visibility problem is solved in one scan plane at a time by making a "good guess" as to what is visible according to the visible portions found in the previous scan plane.

The methods that Dr. Mahl [5] used are related to the Watkins' algorithm. They offer two kinds of advantages over the algorithm of BE VISION. First, they yield visible surfaces instead of systematically eliminating hidden lines. Thus, they permit the generation of shaded pictures with only the further effort of computing the shading value along the visible portions of the surfaces. Secondly, they work in an amount of time which is roughly proportional to the number of surfaces fed into the algorithm, rather than the square of this number. Figures 6 and 7 are included in Dr. Mahl's Technical Report.

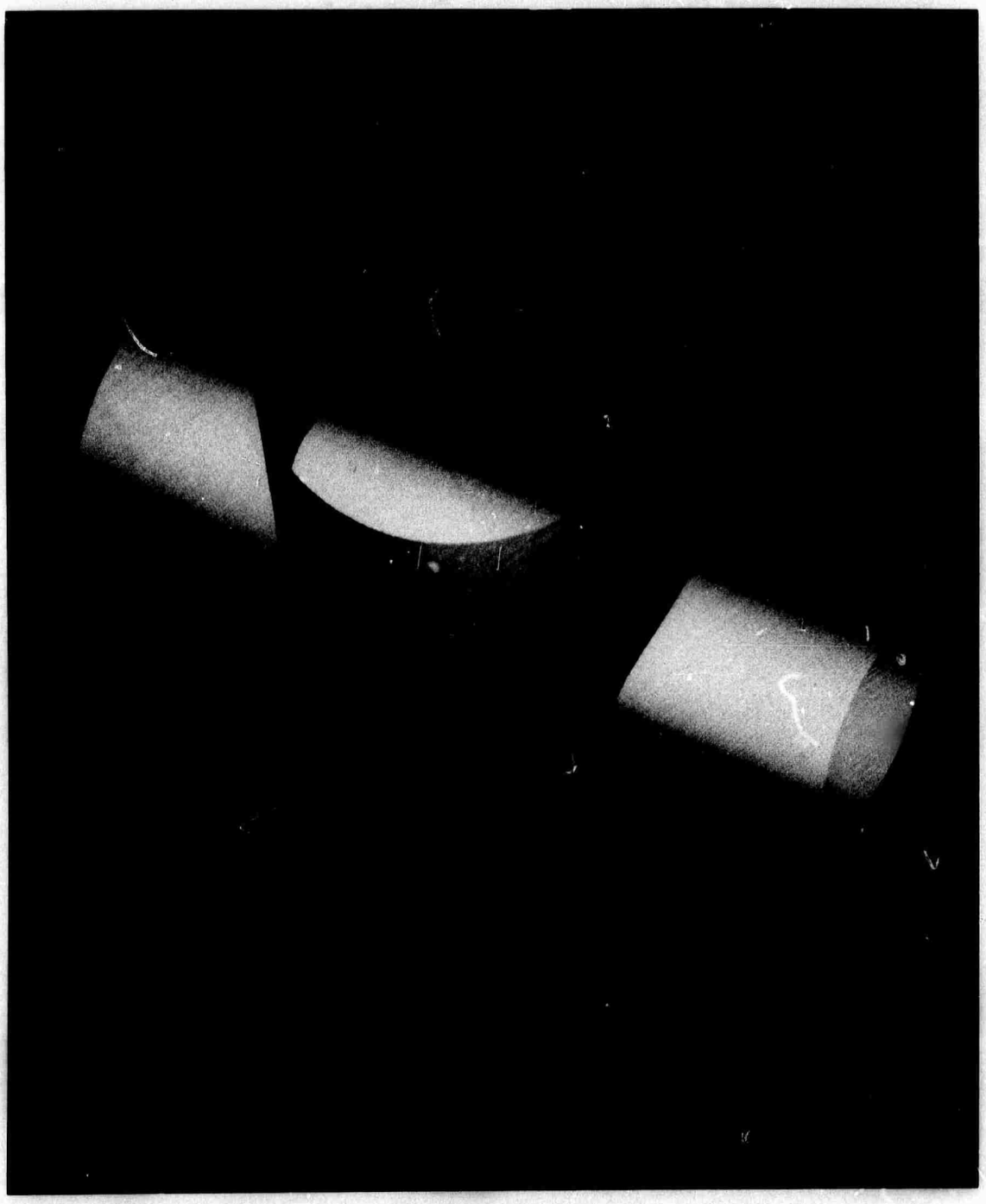

Figure 6: Two Intersecting Cylinders

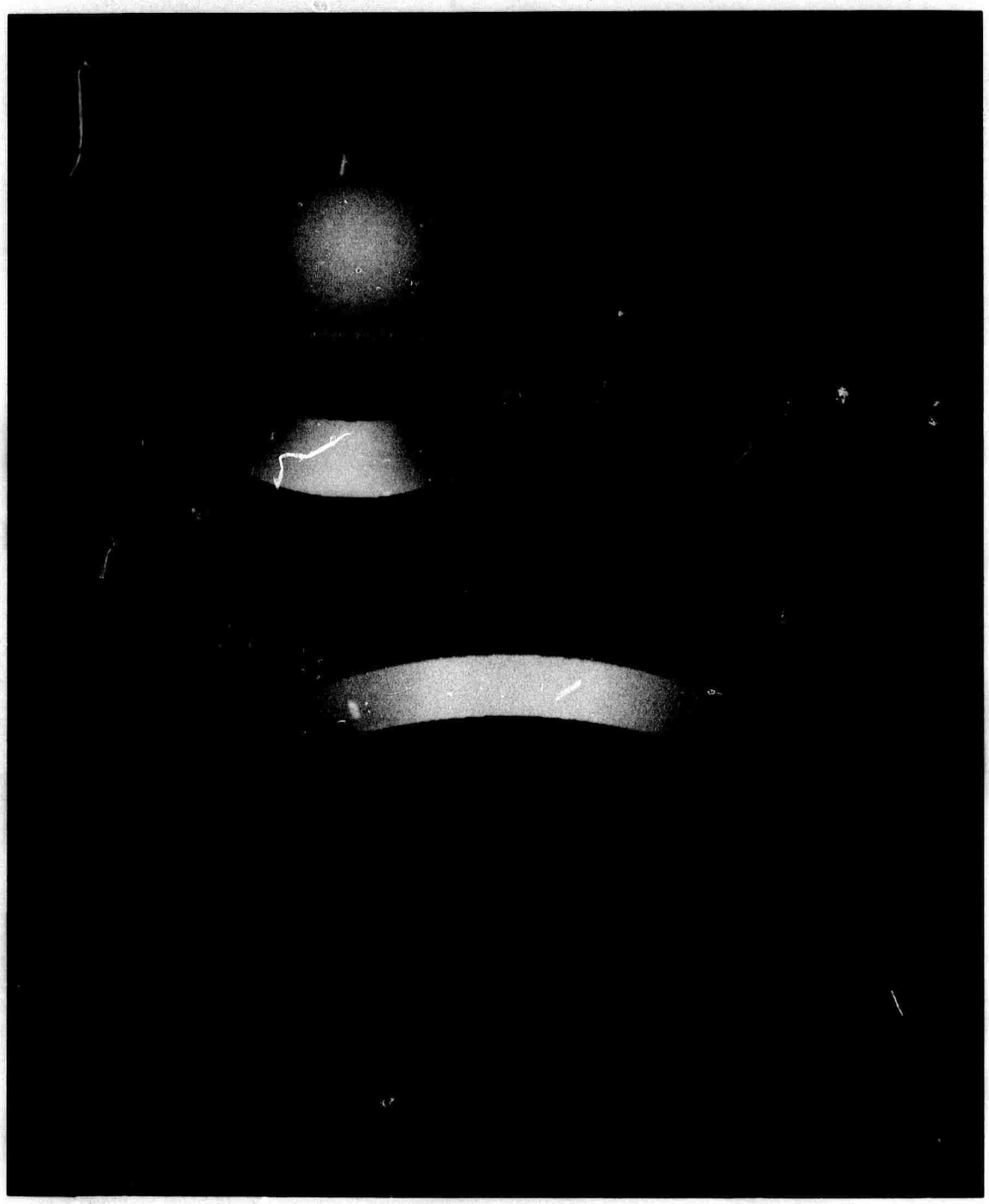

Figure 7: Cup and Saucer

The algorithm for intersecting patches works in a time roughly proportional to the number of patches involved (and not to the square of this number as with some previous algorithms).

Optimal Control of a Process with Discrete and Continuous Decision Variables[6]

The task of dynamic optimization consists of manipulating the inputs to a dynamic system (i.e., one in which the state varies with time) so that the system performs in an advantageous manner.

This research presents a systematic technique for solving the problem of optimally controlling a converter aisle in a copper smelter.. The converter aisle is distinguished from the usual dynamic system in that some of the control variables occur as discrete decisions while others may vary continuously with time. In this sense, the converter aisle typifies many industrial processes. The aisle is viewed as a total system with the objective of optimizing overall performance as evaluated using a mathematical performance criterion. Typical criteria reflect total processing time and operating costs.

Major steps and approaches to aisle optimization are pointed out, and two optimization approaches are presented. The first is a direct approach which results in a problem that is computationally large -- so large, in fact, that a major investment in time and effort is required to produce any results. Consequently the direct optimization approach is not used, but rather, an alternative method is developed whereby the problem is partitioned into smaller interacting

subproblems which may be solved with a reasonable effort in a relatively short period of time. The contribution of this report is the systematic method of partitioning a large complex problem, such as the converter aisle, into a class of more easily solved subproblems and then composing the solutions to the subproblems to form a total optimal solution. This research received primary support from the Scientific and Engineering Computer Center, Kennecott Copper Corporation, Salt Lake City, Utah.

Empirical Modeling of Occurrence of Severe Weather Events[7]

This study attempts to demonstrate the feasibility of constructing a model to estimate the probability of occurrence of three types of severe weather events. A 10 x 10 grid with grid squares approximately 50 x 50 nautical miles in size is placed over portions of the plains states east of the central Rocky Mountains.

A model is developed for estimating the probability of occurrence of "non-severe weather," "severe winds," "wind damage or hail," or "tornado" events within 50 x 50 nautical mile blocks over portions of the plains states. Using an adaptive, non-parametric technique, the model approximates the probability density of these events as a function of 21 parameters which are derived from estimates of height, temperature, dew point, and wind at 850-, 700-, 500-, and 200-millibar levels above the center of each block. The densities are used to generate a forecast of the severe events, i.e., the parameters are

estimated and densities evaluated and used to forecast an occurrence center, the probability at the center, and a surrounding region of likely occurrence.

The densities were trained using two years of data over a 100-block area. Forty-two thousand non-severe events were eliminated, and 15,330 remaining events were approximated by 320 "cells" with 43 parameters each. The densities did not converge, but indicated stabilization after about five years of training data. On the original data, 67 per cent of the forecasts were realized, and only 15 per cent of all severe events were not forecast. As the densities converge, the model should approach these results for non-training (independent) data.

The author believes this algorithm is feasible for the problem of modeling severe weather occurrences in a multi-dimensional measurement space. However, additional work should be done on optimizing the parameters used in the algorithm and on improving the source data. The capability that this algorithm for training may make it a useful tool to link observed data with parameters which are forecast from dynamic models.

Heuristic Interactive Synthesis of Cellular Arrays, Based on Polish Notation[8]

The object of the research contained in this thesis is to develop a workable design tool for embedding arbitrary Boolean switching functions in a class of cellular arrays. Such a system is produced in an

interactive mode, using a heuristic approach, and based upon the notational system called Polish notation.

A correspondence is developed between arbitrary Polish notation representations of Boolean functions and a class of cellular arrays. Heuristic manipulative procedures for Polish strings are developed. These procedures are applied to reduce the Polish string to a form corresponding to a near minimal number of cells in the array realizing the function. Options available to the designer are presented, with the purpose of further reducing the array, using the gestalt forming abilities of the human operator. The class of arrays is shown to be inadequate for all switching problem formulations and a new class of arrays, the buss arrays, is introduced to overcome this deficiency. An algorithm is developed to embed Polish string representations of Boolean functions in buss arrays. A heuristic interactive approach to applying and modifying this algorithm is presented. Examples are produced, including a cellular multiplier.

The techniques developed in this report differ from past results in one major way. A heuristic approach to cellular logic has, to the author's knowledge, never been developed. Previous efforts have been aimed at deterministically synthesizing all functions in a particular array style. Further efforts have been made to determine the optimal solution by some criterion. The resultant array is quite independent of the logical designer and depends only upon the algorithm developed by the theoretician.

PART II. FACILITIES

During this period the PDP-10 computing facilities have served well for the support of research. Some reliability problems, however, have been encountered with the memory system and with the disk file system.

The only major change in the system during this period was the installation of the Evans & Sutherland channel control unit. The channel control is the control unit of the display processor and utilizes the Harvard University prototype matrix multiplier and clipping divider as arithmetic elements (see Figure 1).

The ARPA Network IMP/PDP-10 interface is complete and working and the Document-1 Network Control Program (NCP) is running.

PART III. PUBLICATIONS AND PRESENTATIONS

1 July 1970 to 31 December 1970

Following is a listing of presentations and publications made by Computer Science Department personnel during the reporting period related to ARPA sponsored projects and/or activities. This listing is included merely to indicate the scope of exposure our work has had during this period and not as a means of announcing new research discoveries made under the contract. All significant information contained in either the presentations or written articles has been previously reported on an individual basis.

DeBry, R. K. and R. Kessler, "DTRAN - a Graphics Package for Use with the Univac 1557 Display", internal publication of the University of Utah Computer Science Department, August 1970.

Gouraud, H., "Hidden Surface Removal: An Application to Curved Surfaces", talk given at the University of British Columbia Computing Center, October 8, 1970.

Gouraud, H., "Computer Graphics - Visual Output Displays", talk given at the Canadian Information Processing Society, October 8, 1970.

Hankley, W. J. and Frederick E. Templeton, "Optimal Control of a Process with Discrete and Continuous Decision Variables", University of Utah Computer Science Technical Report UTEC-CSc-70-107, December 1970.

Hearn, A. C., "REDUCE 2 User's Manual", Stanford Artificial Intelligence Project Memo AIM-133, October 1970.

Lee, R. M., "Measuring the Bending of a Vibrating Plate", seminar at Brigham Young University, Provo, Utah, November 19, 1970.

Logan, N. S., "Master Schedule Building and the Flexibly Scheduled School", University of Utah Computer Science Technical Report UTEC-CSc-70-106, December 1970.

Newman, W. M., H. Gouraud and D. R. Oestreicher, "A Programmer's Guide to PDP-10 EULER", University of Utah Computer Science Technical Report UTEC-CSc-70-105, July 1970.

Seror, D. E., "DCPL - a Distributed Control Programming Language", University of Utah Computer Science Technical Report UTEC-CSc-70-108, December 1970.

Stephenson, R. E., "Computer Simulation for Engineers", Harcourt, Brace, Jovanovich, 1970.

Stockham, T. G., Jr., "Quality Control in Scanning Images In and Out of Digital Processors", talk given at the Symposium of Picture Coding, North Carolina State University, Raleigh, North Carolina, September, 1970.

Stockham, T. G., Jr., "Application of Digital Signal Processing Techniques to Picture Processing", Digital Signal Processing Seminar 1970, Northeast Electronics Research and Engineering Meeting, Boston, Massachusetts, November 1970.

Sutherland, I. E.,"Windows into Alice's Wonderland", IEEE Student Journal, Vol. 8, No. 4, September 1970.

Sutherland, I. E., "Computer Displays", talk given at the University of Ohio Distinguished Lecture Series, November 12, 1970.

Vickers, D. L. and M. Archuleta, "Computer Research at the University of Utah", talk given to the Great Salt Lake Chapter of the Data Processing Management Association, September 17, 1970.

Warnock, R. B., "WIRLST - a PDP-10 Wire Listing Program", internal publichation of the University of Utah Computer Science Department, September 1970.

Wessler, B. D., "Interactive Network of Computers", talk given at the Department of Commerce Solo Computer Conference, Tokyo, Japan, October 1970.

BIBLIOGRAPHY

1. Watkins, G.S., "A Real-Time, Visible Surface Algorithm", Ph.D. dissertation, UTEC-CSc-70-101, Computer Science Division, University of Utah, July 1970.

2. Seror, D. E., "DCPL - A Distributed Control Programming Language", UTEC-CSc-70-108, Computer Science Division, University of Utah, December 1970.

3. Ashton, A. C., "Electronics, Music and Computers", Technical Report pending publication.

4. Weiss, R. A., "BE VISION, a package of IBM 7090 Fortran programs to draw orthographic views of combinations of plane and quadric surfaces", *Journal of the ACM, 13,* 2 (April 1966), pp. 194-204.

5. Mahl, R., "Visible Surface Algorithms for Quadric Patches", UTEC-CSc-70-111, Computer Science Division, University of Utah, December 1970.

6. Hankley, W. J. and Templeton, F. E., "Optimal Control of a Process with Discrete and Continuous Decision Variables", UTEC-CSc-70-107, Computer Science Division, University of Utah, December 1970.

7. Hankley, W. J. and Carey, T. W., "Empirical Modeling of Occurrence of Severe Weather Events", Technical Report pending publication.

8. Berges, G. A., Jr., "Heuristic Interactive Synthesis of Cellular Arrays, Based on Polish Notation", Technical Report pending publication.