AD723416

Engineering Report ER6419
October 1970

INDEX OF PROXIMITY: A TECHNIQUE FOR SCORING SUPPRESSIVE FIRE

By
A. F. Tiedemann, Jr.
R. Bruce Young

DDC
RECEIVED
MAY 21 1971
B

Prepared For
Weapons Branch, Systems Research Laboratory
Human Engineering Laboratories
USA Aberdeen Research And Development Center
Aberdeen Proving Ground, Maryland 21005

By
AAI Corporation
BALTIMORE, MARYLAND

DISTRIBUTION STATEMENT A
Approved for public release;
Distribution Unlimited

Under Contract No. DAAD05-70-C-0394

Reproduced by
NATIONAL TECHNICAL
INFORMATION SERVICE
Springfield, Va. 22151

77

DDC Availability Notice

Qualified requestors may obtain copies of this report from DDC.

Destroy this report when no longer needed.
Do not return it to the originator.

This document has been approved for public release and sale; its distribution is unlimited.

The findings in this report are not to be construed as an official Department of the Army position, unless so designated by other authorized documents issued and approved by the Department of the Army.

ACCESSION for
CFSTI WHITE SECTION ☐
DDC BUFF SECTION ☐
UNANNOUNCED ☐
JUSTIFICATION .....
.....
BY .....
DISTRIBUTION/AVAILABILITY CODES
DIST. AVAIL. and/or SPECIAL
A

ERRATA

Pg. 38 In Table II, 4 bad shots,
Change .394 to .377

Pg. A-2 For Shot 8, X coordinate is +4
Pg. A-3 For Shot 8, X coordinate is +4

Pg. A-14 Change F_5 from .033 to .016
Change I_p from .394 to .377

FOREWORD

This report was prepared under the technical supervision of Mr. John L. Miles, Jr., Human Engineering Laboratories, USA Aberdeen Research and Development Center. Appreciation is extended to Dr. Leon T. Katchmar, of those Laboratories for the perspective on fire suppression of the individual. The authors also wish to acknowledge the technical contributions of Dr. Willis Gore, and Mr. S. R. Dutton of the AAI Corporation.

TABLE OF CONTENTS

	Title	Page No.
I.	INTRODUCTION	1
II.	TECHNICAL APPROACH	5
	A. General Considerations	5
	B. Derivation of Index	10
	C. Plane of Measurement	23
	D. Weighting Factor Rationale	28
	E. Rules for Scoring	31
	F. Sample Calculation of I_p	32
	G. Sensitivity of I_p to Weighting Factor Rationale	37
	H. Comparison of Indices for Two Fire Missions	39
	I. Comparison of Indices for Two or More Groups of Fire Missions	46
III.	REFERENCES	50
IV.	DISTRIBUTION LIST	51
V.	APPENDIX	A-1

INDEX OF PROXIMITY: A TECHNIQUE FOR SCORING SUPPRESSIVE FIRE

by

A. F. Tiedemann, Jr.
R. Bruce Young

October 1970

PREPARED FOR:

Weapons Branch
Systems Research Laboratory
Human Engineering Laboratories
USA Aberdeen Research and Development Center
Aberdeen Proving Ground, Maryland 21005

BY:

AAI Corporation
P. O. Box 6767
Baltimore, Maryland 21204

Under Contract No. DAAD05-70-C-0394

ABSTRACT

A statistical procedure has been developed which assesses and expresses in an index number the proximity to the target of impact points for serially fired small arms rounds. Factors which are thought to contribute to fire suppression of the individual have been included in the index so that it may be used as a scoring technique for suppressive fire. The index can be used to compare individual fire missions as well as two or more groups of fire missions.

The index has been designed primarily for use in R & D field tests of man-weapon-ammunition systems in which comparisons need to be made of the performance of different systems. It should be particularly useful in comparing missions in which there is a tendency toward good correction, but where the number of actual hits on the target is quite small. Use of the index requires a knowledge of the projectile impact points with respect to the target location.

UNCLASSIFIED
Security Classification

DOCUMENT CONTROL DATA - R & D

(Security classification of title, body of abstract and indexing annotation must be entered when the overall report is classified)

1. ORIGINATING ACTIVITY *(Corporate author)* AAI Corporation	2a. REPORT SECURITY CLASSIFICATION 2b. GROUP

3. REPORT TITLE

Index of Proximity: A Technique For Scoring Suppressive Fire

4. DESCRIPTIVE NOTES *(Type of report and inclusive dates)*

5. AUTHOR(S) *(First name, middle initial, last name)*

A. F. Tiedemann, Jr.

R. Bruce Young

6. REPORT DATE October 1970	7a. TOTAL NO. OF PAGES 71	7b. NO. OF REFS 6
8a. CONTRACT OR GRANT NO. DAAD05-70-C-0394 b. PROJECT NO. c. d.	9a. ORIGINATOR'S REPORT NUMBER(S) ER-6419 9b. OTHER REPORT NO(S) *(Any other numbers that may be assigned this report)*	

10. DISTRIBUTION STATEMENT

This document has been approved for public release and sale; its distribution is unlimited.

11. SUPPLEMENTARY NOTES	12. SPONSORING MILITARY ACTIVITY Human Engineering Laboratories Aberdeen Proving Ground, Maryland

13. ABSTRACT

A statistical procedure has been developed which assesses and expresses in an index number the proximity to the target of impact points for serially fired small arms rounds. Factors which are thought to contribute to fire suppression of the individual have been included in the index so that it may be used as a scoring technique for suppressive fire. The index can be used to compare individual fire missions as well as two or more groups of fire missions.

The index has been designed primarily for use in R&D field tests of man-weapon-ammunition systems in which comparisons need to be made of the performance of different systems. It should be particularly useful in comparing missions in which there is a tendency toward good correction, but where the number of actual hits on the target is quite small. Use of the index requires a knowledge of the projectile impact points with respect to the target location.

DD FORM 1 NOV 65 1473 REPLACES DD FORM 1473, 1 JAN 64, WHICH IS OBSOLETE FOR ARMY USE.

UNCLASSIFIED
Security Classification

UNCLASSIFIED
Security Classification

14. KEY WORDS	LINK A ROLE	LINK A WT	LINK B ROLE	LINK B WT	LINK C ROLE	LINK C WT
Fire Suppression						
Effectiveness						
Tracer Ammunition						
Scoring Technique						
Human Engineering						
Weapons Testing						

UNCLASSIFIED
Security Classification

I. INTRODUCTION

The purpose of many small arms field tests is to predict the combat effectiveness of certain man-weapon-ammunition systems. Often, it is desirable to compare the results of one such system with another on the same terrain under nearly identical conditions. In the past, these comparisons have been made primarily with regard to rates of fire and some expression of hits/shots fired. While these measures undeniably are important in terms of ultimate combat effectiveness of the system, it is likely that there are additional measures which, if known, would enhance the accuracy of our prediction of combat effectiveness. One measure may well be the increase in proximity to the target of the ground impact points of successive rounds: even though an enemy target might not be hit, rounds coming ever closer might cause the personnel under fire to cease their hostile activity and seek cover. This behavior is usually referred to as fire suppression and is generally regarded as a desirable condition for friendly forces to achieve.

The purpose of this report is to explain a procedure for deriving an index number which is descriptive of the progressive and sequential proximity to the target of the impact points of the rounds fired in a single engagement. Such a procedure has previously been unnecessary, inasmuch as the instrumentation employed in small arms field tests produced only discrete kinds of data - hit or miss, near miss or far miss. Recent advances in instrumentation have made it possible to determine (or at least calculate) the miss distance and direction (in X, Y coordinates) for a given target of each round not hitting that target. From these coordinates, a number descriptive of their proximity

to that target can be derived. The procedure will also permit ready comparison of two or more engagements or groups of engagements.

It is important to make clear at the outset that the procedure which follows concerns the R & D situation described above. It does not attempt to postulate either an operations research concept of fire suppression or a suppression simulation model. Although such a concept and model may eventually incorporate portions of the procedure explained here, they should account for at least three factors prior to accepting parametric values for ballistic data such as round size, impact point and rate of fire. These three factors, which are probably interrelated, can be identified as --

A. Behavioral Alternatives Available

Of crucial importance in predicting an individual's behavior under fire is a knowledge of the behavioral alternatives available to him at the time he perceives (but is not hit by) the hostile fire. For example, the common notion of suppressive behavior has the individual quickly seeking cover, putting his head down, and -- ultimately -- cowering. This may be totally correct if the individual is alone (especially lost) in the woods. But what if he is in an assault boat on the ocean? Here, his alternatives might be (1) staying in the boat until it reaches the beach and chancing that he won't be hit or (2) jumping into the ocean. Since the first alternative seems to offer greater liklihood for survival, the individual's apparent behavior after onset of the supposedly "suppressive" stimulus may be no different than before that stimulus.

B. Individual's Motivational/Emotional State

Psychological literature will support the contention that what an individual is doing at the onset of a given stimulus will, in part, determine his response to that stimulus. Take two extreme cases: In the first, the individual is tranquil --- perhaps resting quietly in the shade of a tree. A small arms round suddenly impacting close by is likely to produce a startle reaction followed by a seeking of cover until he has organized his senses to deal with the event. In the second case, the individual is in a state of anger and rage -- perhaps he has just seen a buddy hit or killed. The same small arms round landing nearby is unlikely to produce cowering; on the contrary, it may even cause the individual to seek the source of the hostile fire to vent his rage.

C. Individual's Background/Culture

Although there is not always a clear distinction between them, it is helpful to consider this influence in two parts --

1. Personal

The individual's particular arrangement of personality traits (aggressiveness, ascendancy, extroversion, general activity level, sense of worth and self-sufficiency -- to name but a few) interacting with his past experience mediates his response to "suppressive" stimuli; and a stimulus sufficient to suppress one particular individual may not suppress another.

An additional influence mediating an individual's response to a "suppressive" stimulus will be the social situation or "group dynamics" extant at the onset of the stimulus. A given stimulus may suppress an individual when he is alone but not when he is with - or believes he can be observed by -

members of a group on which he depends for primary social intercourse.

2. Military

If an individual is to become a successful member of a military establishment, there are usually certain behavior patterns sanctioned by that establishment which he accepts. For example, in a military force which habitually takes no more than 10% casualties in battle, an infantryman may be told or may realize that, if he does as he is told, he stands a 90% chance of coming through the action alive; whereas cowering behavior (of the sort supposedly caused by suppression) may be met with 100% certain retaliation from his own forces. A similar sort of sanctioned behavior adopted by the individual was exemplified in the Battle of Tarawa -- where the majority of the Japanese soldiers, despite overwhelming odds, either fought to the death or chose suicide before surrender.

The three factors mentioned above: behavioral alternatives available, individual's motivational/emotional state, and individual's background/culture, by no means account for all of the possible conditions which can influence an individual's behavior under fire -- particularly inasmuch as fire suppression, at least in behavioral terms, is not well defined. The procedure which follows does not purport to address any of those conditions nor to claim any validity for predicting individual behavior in a "real life" situation. It should, however, prove useful by providing an additional level on which to analyze and compare data from field tests of man-weapon-ammunition systems where firing times, number of rounds, and impact points (in X, Y coordinates) are known.

II. TECHNICAL APPROACH

A. General Considerations

The Human Engineering Laboratories of the USA Aberdeen Research and Development Center are now engaged in an experimental evaluation of the effectiveness of tracer ammunition in the infantry ground-to-ground role. While the index of proximity explained below has been developed to be applicable in a wide variety of R&D test situations, the specific purpose for which it was created was to distinguish--quantitatively--between the ground impact patterns of tracer and ball in a simulated tactical situation. Consequently, the HEL Tracer Program has dictated certain constraints upon and precepts for the index.

First, the number of data points (i.e., shots) available for a single fire mission will be small, on the order of 3 to 10. Second, the index of proximity should provide a measure of the gunner's ability to improve his proximity to the target with succeeding shots. Third, it is desired to bias the index in favor of performance which leads to good suppression. Since the nature and relative importance of the factors which contribute to good suppression are not fully agreed upon by all investigators, provision should be made to adjust the amount of weight given to a single element.

The fact that in some R&D tests the number of data points for a single mission may be small, and perhaps only two in number, suggested that care would have to be exercised to insure that the method used to compute the index would give valid, meaningful results. Conventional statistics usually require sample sizes much larger than two.

Assessing the gunner's ability to improve his performance with successive rounds led to an evaluation of what constitutes improvement. The first thought was that if each round is closer to the target than the one before, then the performance has indeed improved. This measure was called "relative nearness of sequential rounds". It was next reasoned that if two gunner's both put their rounds closer and closer to the target, but at the end of the mission one man's closest round was closer than the other's, the first man had a better proximity; hence, a more suppressive mission. Therefore, this "absolute nearness of the closest round" should be an element of the index. One more measurement of improving proximity was thought to be desirable. That measurement was the "rate of closure" of the shots. It was reasoned that, if one man missed the target by a wide margin with his first shot and managed to get much closer with a later shot, this performance should be differentiated from a man whose first shot was close to the target and succeeding shots closer such that his best shot was the same as the best shot of the first man in this example. The thought here was that a beneficial aspect of tracer ammunition may be that it helps the poor shooter to get on the target sooner, and the index should reflect this rate of improvement.

These three factors, relative nearness of sequential rounds, absolute nearness of closest round, and rate of closure were thought to be the essential elements in assessing the actual improvement of proximity of the rounds to the target. In addition, it was desirable to incorporate into the index some other factors which are thought to contribute to suppressiveness. Specifically, rounds which hit in front of the target, should score better

than those which are high and thus land approximately the same distance behind it. Also, successive rounds which bracket the target are thought to be more suppressive than those which do not*.

Consideration was given to including rate of fire in the formulation of the proximity index. Evaluation of the many factors associated with this led to the conclusion that rate of fire should be used in conjunction with the index rather than as a part of the index. There are several reasons for this conclusion. First, all other elements of the index model are geometric in nature and pertain to the actual placement of the rounds relative to the target. Rate of fire would seem to introduce an extraneous element into this otherwise geometrically-oriented index. A second consideration is that the rate of fire achieved in the tests may be strongly dependent on the amount of time that the test subject thinks or is told that he has in a given exercise. Therefore, one use of the rate of fire data would be to compare rates of fire for comparable indices. Given two systems which achieve an index of the same value, the one which also had the highest rate of fire is probably the more desirable from a suppression standpoint.

At this point we had established five factors which should contribute to the index of proximity: relative proximity of sequential rounds, absolute proximity of the closest round, rate of closure, low hits, and bracketing of the target with successive hits. We had attempted to accommodate those elements of aimed rifle fire which were thought to contribute to

---

* Argumentative on philosophical grounds; accepted per se for this report.

suppressiveness. However, it was recognized that specific doctrines have not as yet been developed in this area and that various users may have access to experience or information which would suggest to them that some elements of the model are more significant than others. Therefore, it was decided to develop a model which would permit the use of weighting factors on each element of the model so that the user could weight the emphasis to reflect his requirements and rationale. Thus, computation of the index could change as doctrine was developed. Furthermore, modifications to the index to accommodate new doctrine could be accomplished with relative ease.

A review of references 2, 3, 4 and 6 did not reveal a conventional statistical procedure which in and of itself would reflect all of the factors to be considered in the index. However, it was apparent that generally accepted criteria for the various elements in the index could be established. Therefore, the approach taken was to develop a procedure which would take into consideration each factor at a time, and then these values would be totaled for an overall index of proximity for one firing mission. Thus, the index would take the form

$$I_p = f_1 w_1 + f_2 w_2 + f_3 w_3 + f_4 w_4 + f_5 w_5$$

Where:

f_i = factor to be considered

w_i = weighting factor applied to f_i

The index can be used to compare individual firing missions and groups of firing missions. It was thought that this comparison would be

facilitated if the index was constructed such that it always attained a value between two fixed limits, such as zero and unity. Such a construction is possible if each factor, f_i , is equal to or less than unity and if the sum of the weighting factors w_i is equal to unity. Hence, mathematical descriptions of each factor in the index were sought in such a form that a perfect score gave a value of unity and poorer performance gave a score falling between zero and unity.

A purpose of the index is to assess improving performance with successive rounds. Therefore, the index can treat only firing missions which have <u>one or more</u> rounds fired before a hit occurs. Firing missions in which a first round hit is achieved cannot be scored with the index of proximity.

A second round hit should achieve a perfect score (i.e., I_p = 1.0) because this represents the ultimate in improving proximity. Therefore, expressions for f_i were sought in a form such that n = 2 gave I_p = 1.0.

Some tests include firing at a target which does not fall after it is hit. Thus, there are missions in which there are misses, a hit, and subsequent hits and misses. The computation of the index of proximity explained here treats only those shots up to and including the first hit. <u>The index of proximity assesses the ability of the shooter to correct</u> - not his ability to stay on the target. Other measures of performance such as hits/shots ratio or mean radial error should be used to assess the ability of the shooter to stay on or near the target.

B. Derivation of Index

1. Relative Proximity of Sequential Rounds

The relative proximity of sequential rounds may be quantified in this manner:

The (i + 1) round is either closer or farther than the ith round. For n serially fired rounds the distribution or outcome for all possible combinations of closer or farther rounds follows the binomial expansion. One can quickly construct Pascal's triangle and apply the following interpretation:

Number of Shots Fired							
2			1(0)	1(1)			
3		1(0)	2(1)	1(2)			
4	1(0)	3(1)	3(2)	1(3)			
.							
.							
.							
.							
n	1(0)						1(n-1)

Where:

( ) = number of times the (i+1) round is closer than the ith round. The coefficients of the expansion indicate the chance frequency of the event ( ).

The above table shows that for n shots the maximum number of sequentially closer shots is n-1 and this can occur only one way.

Thus, using the ith round as a reference, comparisons are made in accordance with $R_i - R_{(i+1)} > 0$.

Where:

R_i = radius from the impact point to the target

$i = 1, 2 \ldots\ldots\ldots n$

Since nearness is best, a sequence $\{R_i\}$, such as $\{10, 6, 4, 3, 1\}$ is the best possible. All successive rounds are closer than the previous round.

If we let h = the number of times the (i + 1) round is closer than i^{th} round, then for n rounds, subject to $n \geq 2$, a measure of the best sequence obtainable is given by

$$\frac{h}{(n-1)}$$

If we associate with this relative measure of successive round proximity the weighting factor w_1, and restrict w_1 to lie on the interval (0, 1), then the quantity

$$\frac{h}{(n-1)} w_1$$

also lies on the interval (0, 1) and describes that portion of the overall measure of index of proximity ascribable to getting successive rounds closer to the target.

2. Absolute Proximity of the Closest Round

Illustrated below in Figure 1 are hypothetical data from two firing missions of four rounds each.

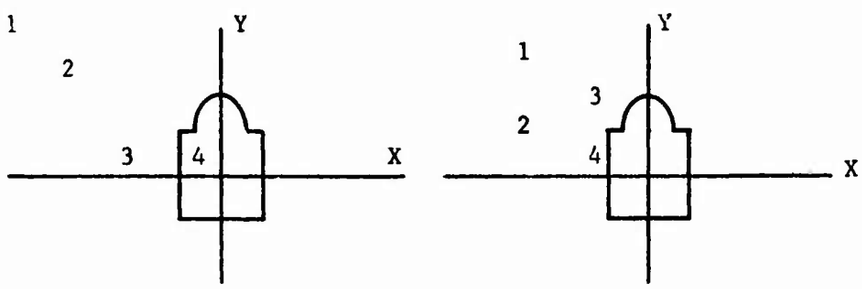

Impact Points, Mission 1 Impact Points, Mission 2

FIGURE 1. HYPOTHETICAL FIRING MISSIONS

Note that if we apply the criteria developed in the preceding section, identical results are obtained for both firing missions. It is apparent that additional measures are required to discriminate between the firing missions. If we were to fit a straight line* to the data points, we would obtain a plot such as that illustrated in Figure 2.

---

* There are data available which indicate that the <u>best</u> fit of miss distance versus round number is exponential rather than a straight line. However, in the present analyses we are concerned primarily with the overall improvement from the farthest round to the nearest round. The sequential or round to round aspect is of less importance since it was treated in the previously derived factor -- relative proximity of sequential rounds. Thus, the straight line approximation is the most useful for the present purposes.

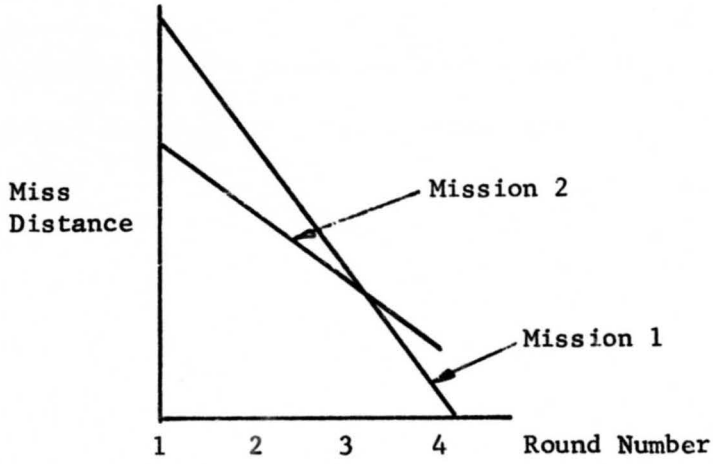

FIGURE 2. STRAIGHT LINE FITTED TO HYPOTHETICAL DATA

Figure 2 clearly illustrates that there is a difference between the firing missions and that difference is: Mission 1 not only gets closer to the target but it also gets closer faster. That difference can be quantified by contrasting the slope of the two lines and their intercepts.

In order to account for the contribution of the closest round in the overall measure of the index of proximity, we define an allowable radial miss distance, ρ , and postulate that any round impacting within the circle described by the radius ρ in the target screen contributes to the effectiveness of the firing mission. If the distance from the target to the closest round is r_{min}, then the quantity

$$\frac{\rho - r_{min}}{\rho}$$

is an indicator of the correction efficiency.

If we associate with the closest round a weighting factor w_2, and restrict w_2 to lie on the interval (0, 1), then the quantity

$$\left(\frac{\rho - r_{min}}{\rho}\right) w_2$$

Subject to:

$$r_{min} \leq \rho$$

also lies on the interval (0, 1) and describes that portion of the overall measure of index of proximity ascribable to the actual distance from the target of the closest round.

If we let . . . . .

$$\left(\frac{\rho - r_{min}}{\rho}\right) w_2 = C$$

then,

$$C = 0 \quad , r_{min} > \rho$$

$$0 \leq C < 1 \ , \ 0 < r_{min} \leq \rho$$

$$C = 1 \quad , \text{hit or } r_{min} = 0$$

The notion of ρ, the allowable miss distance, serves two purposes. First, it provides a convenient means of creating a parameter (absolute proximity of closest round) such that its value always lies between zero and unity. Second, it enables the user to consider only those impact points which are within a predetermined distance of the target; namely, ρ --

the allowable radial miss distance. This option is useful for screening out data points which are so far out of the expected pattern that some outside influence is suspected. (For example, a gunner stung by a bee just as he shot.) If the user wants to be sure that he does not exclude any data points, he should simply review his data before the data reduction and select ρ such that its value is greater than the maximum experienced miss distance.

If the user selects ρ such that all data points are used, then effectively he is using his worst shot (greatest miss distance) as a criteria for measuring the relative goodness of all the other shots in the test series. If he selects a smaller value for ρ, then he is judging the shots against a limit which he has defined by some rationale other than the worst shot experienced. In general it would be desirable to select a value for ρ which is as small as possible and yet still includes all of the data points that the user wants to include. The reason for such a selection is that it increases the sensitivity of the parameter. Increasing values of ρ should be selected for increasing target ranges. However, for a given target range a single value of ρ should be used for all of the data reductions in a given series of tests.

3. Rate of Closure

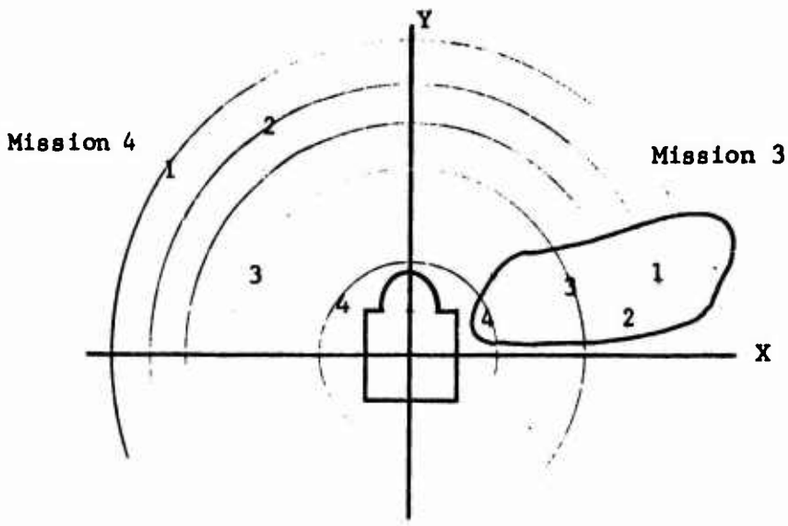

FIGURE 3. SUPERPOSITION OF IMPACT POINTS FROM TWO FIRING MISSIONS

The importance of including the contribution of rate of closure in the overall measure is graphically shown in Figure 3. If the measures developed in the two preceding sections are applied to the impact points of Figure 3, identical results or indicies of proximity are obtained for both firing missions. To account for the contribution of the rate of closure and specifically to discriminate between missions as illustrated in Figure 3, consider the fit of a straight line to the data (impact points) of Figure 3.

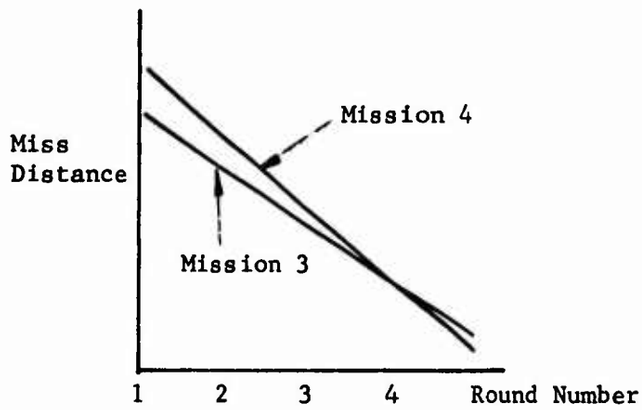

FIGURE 4. STRAIGHT LINE FIT OF FIGURE 3 DATA POINTS

Two facts can be deduced from the straight line fit to the data:

- for a single firing mission the slope of the line is extremely sensitive to the number of rounds fired.
- for missions which terminate after the expenditure of two (2) rounds the slope of the line is markedly influenced by the first round miss distance.

In formulating an expression for the rate of closure we have attempted to minimize the inherent bias in the measurement implied above. Consider the following expression for the rate of closure:

$$(2)\left(\frac{1}{r_\rho}\right)\left(\frac{r_\rho - r_{min}}{n}\right)$$

subject to:

$$n \geqq 2$$

Since at least two shots are required for an index calculation, the very best a subject can do is to hit the target on the second round. For this case, substitution in the above expression yields the quantity 1.

The quantity $(\frac{r_\rho - r_{min}}{n})$ is an indicator of the slope of the line.

The term r_ρ is the distance from the target to the first impact point which falls inside the limit circle defined by ρ.

r_ρ is used instead of the first round miss distance because we want to measure the ability to correct within the allowable limits, i.e., after getting near the target how quickly (in terms of numbers of rounds) is the target hit.

The multiplier $\frac{1}{r_\rho}$ has the effect of restricting the calculated value to the interval [0, 1].

The constant 2 has been added in the expression for rate of closure to provide a more gradual round to round change in the index. If the constant 2 were not used, then a third round hit would receive a score of .33, and a fourth round hit would get .25. This seems to be too much of a penalty for one or two additional rounds. (Recall that a second round hit scores 1.0.) By using the constant 2, a third round hit scores .66 and a fourth round hit scores .50.

If we associate a weighting factor w_3 with the closure rate, and restrict w_3 to lie on the interval [0, 1], the quantity

$$(\frac{2}{n})(\frac{r_\rho - r_{min}}{r_\rho})\ w_3$$

will also lie on the interval [0, 1] and describe that portion of the index of proximity which is ascribable to the subject's ability to get closer to the target faster.

4. Low Rounds

In a series of n shots, let m be the number which impact below the horizontal centerline of the target. Then the ratio $\frac{m}{n}$ is a measure of the number of times a low round was achieved as a fraction of the maximum number of times that it could have been achieved.

If we assign to this ratio a weighting factor w_4, then

$$\left[\frac{m}{n}\right] w_4$$

is a weighted measure for low rounds in the index.

5. Bracketing of Target With Successive Rounds

Impact points about the target vertical centerline can be separated into points to the left of the centerline and points to the right of the centerline. For a series of n rounds, say $n = 5$, a possible outcome is:

left, left, right, left, right

If we define,

left = -

right = +

then that sequence can be expressed

- - + - +

A change of sign indicates that successive rounds have bracketed the target. For n rounds there are a maximum of (n - 1) alternate strikes. An expression for the number of alternate strikes as a fraction of the maximum possible number of alternate strikes is

$$\frac{k}{n-1}$$

Where:

k - number of alternating signs or strikes

If we associate a weighting factor w_5 with the alternating strikes parameter, this element of the index becomes

$$\left(\frac{k}{n-1}\right) w_5$$

An analysis of alternating strike data for a given test may show a degree of serial correlation. That is, the position of the second round may show some dependence on the position of the first round. This serial correlation is of concern to ballisticians, because it tends to invalidate many conventional statistical procedures. However, serial correlation does not invalidate either the index or this element of it. The index assesses the ability of the shooter to perform in a manner which we have predetermined as being "good". Round to round independence is not required.

It should be noted that in the calculation of the "portion" of the index of proximity attributable to relative proximity of sequential rounds, low rounds and alternate strikes we have used <u>all</u> of the data points. The other elements of the index used only the points inside the limit circle defined by ρ . In order to make all of the elements comparable, the relative

proximity, alternating strike, and low round factors must be multiplied by the quantity,

$$\frac{j}{n}$$

Where:

j = number of rounds impacting within the limit circle.

If ρ is selected such that all data points are used then $j = n$ and $\frac{j}{n} = 1$.

Summarizing the contribution of all factors we have:

$$\boxed{I_p = \frac{j}{n}\left\{\left(\frac{h}{n-1}\right) w_1 + \left(\frac{m}{n}\right) w_4 + \left(\frac{k}{n-1}\right) w_5\right\} + \left(\frac{\rho - r_{min}}{\rho}\right) w_2 + \frac{2}{n}\left(\frac{r_\rho - r_{min}}{r_\rho}\right) w_3}$$

subject to $n \geq 2$

$$w_1 + w_2 + w_3 + w_4 + w_5 = 1$$

Where:

I_p = index of proximity

h = number of sequentially closer rounds

j = number of impact points within the limit circle

k = number of alternating strikes or over corrections

m = number of low rounds

n = number of rounds/fired mission

ρ = radius of allowable miss circle

r_ρ = radius from the target to the first shot which impacts within the limit circle

r_{min} = radius from the target to the closest round

w_1 = weighting factor for sequentially closer rounds

w_2 = weighting factor for closest round

w_3 = weighting factor for rate of closure

w_4 = weighting factor for low rounds

w_5 = weighting factor for bracketing the target

The value of I_p thus calculated will always lie on the interval $[0, 1]$. A quantitative measure for each mission can be calculated where $n \geq 2$. This measure may then be used in analysis of variance calculations.

C. Plane of Measurement

As presented in this report, the index of proximity can be used to assess data collected in the vertical plane (that is, impact points on an imaginary plane which passes through the vertical target) or impact points on a horizontal plane (which is normal to the plane of the target). The index can also be used to assess a combination of the two; that is, when miss distance is measured in the vertical plane if the impact point is high and in the horizontal plane if the impact is low (and, therefore, in front of the target). The possible planes of measurement are shown in Figure 5.

The most meaningful results will be obtained if the measurements are confined to the vertical plane. Unless the gunner is elevated well above the target (plunging fire), the rifle projectile trajectory will be very nearly horizontal. At 500 meters an M-80 projectile has an angle of fall of .36 degrees with respect to the ground. Referring to Figure 6, it can be seen that if measurements are made in the vertical plane only, then a round such as case "B" which is one meter low would score the same as a round which is one meter high, such as case "A" (ignoring for a moment the possible desirable psychological effects of a low round). The actual miss distance of case "B", that is, the closest that the round ever gets to the target, is really 164 meters*. Suppose that each gunner fired a second round which is .5 meters closer to the target, in the vertical plane. Thus, case "A" is .5 meters

---

* A round which strikes in front of the target may ricochet such that it later passes closer to the target. If the user's instrumentation can measure this additional trajectory, he may wish to use the point at which the ricochet passes through the vertical plane of the target as his "impact" point.

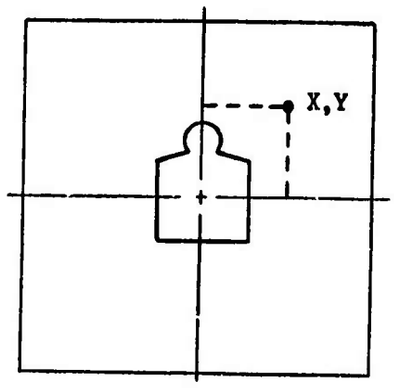

MEASUREMENT IN VERTICAL PLANE

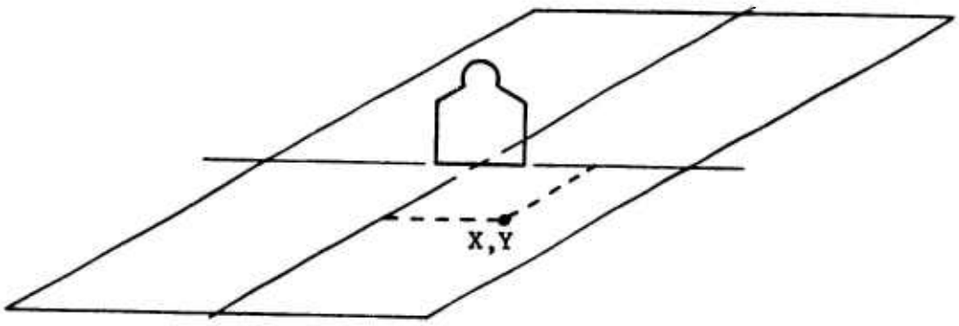

MEASUREMENT IN HORIZONTAL PLANE

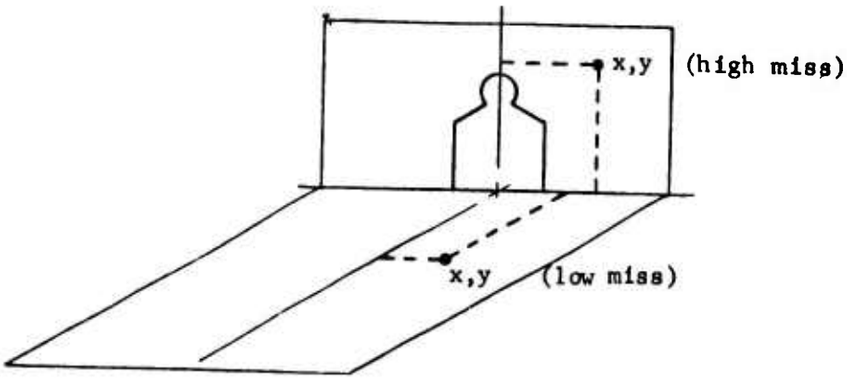

MEASUREMENT IN HORIZONTAL AND VERTICAL PLANES

FIGURE 5. PLANES OF MEASUREMENT

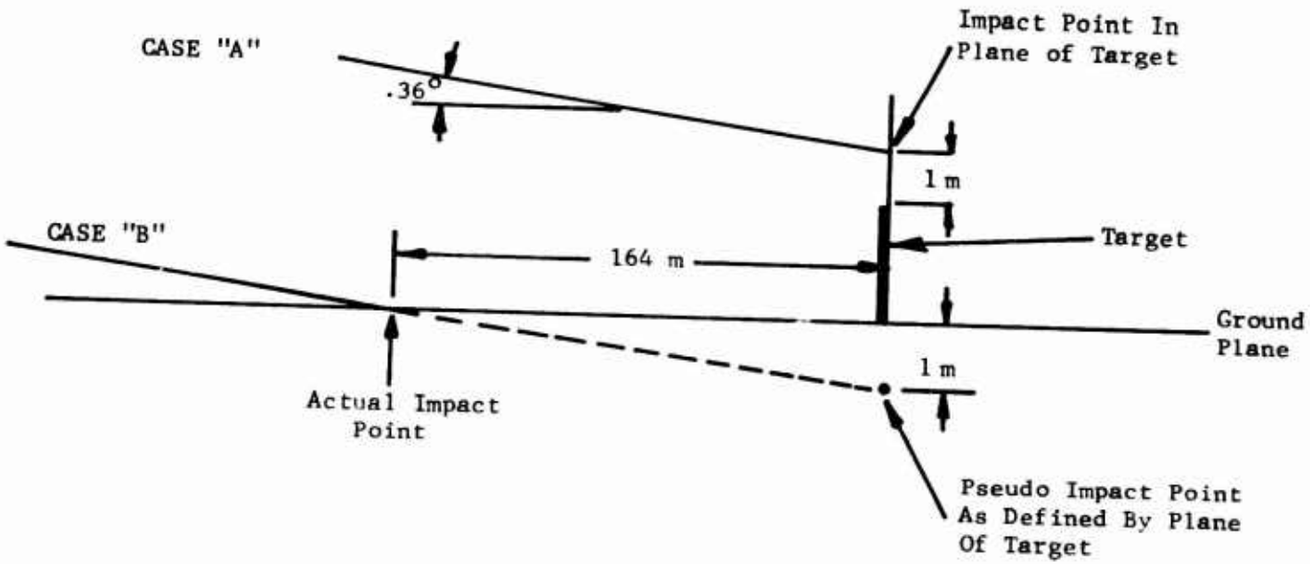

FIGURE 6. EFFECT OF MEASUREMENT IN THE VERTICAL PLANE

above the target and case "B" is .5 meters below it. However, in case "B" the true impact point is still 82 meters in front of the target. Returning to the initial supposition that we are trying to get as near to the target as possible as soon as possible, it seems reasonable that a round which is .5 meters from the target should score better than one which never gets any closer than 82 meters. However, an additional .5 meter correction in the vertical plane by each gunner will put both gunners on the target. In other words, by raising his aiming point 2 mils, the gunner in case "B" was able to achieve a third round hit, while in case "A" lowering the aim point 2 mils gave a third round hit. It is not clear that one correction was more difficult than the other; yet, in terms of actual miss distance, the gunner in case "B" had two rounds which were much further from the target.

Consider another example. In case "A" the first round is 3 mils above the target and the second is one mil above the target. In case "B" the first round is 3 mils above the target and the second round is one mil below the target. Now in terms of the vertical plane, each gunner has corrected to within .5 meters of the target (at 500 meters); yet the second round for gunner "B" landed 82 meters in front of the target. Using the 82 meter value rather than the .5 meter value would seem to be misleading in terms of trying to assess the ability of the gunner to correct and place his rounds accurately. The most meaningful results will therefore be obtained if the measurements are made in the vertical plane.

While the index of proximity presented in this report is applicable to any set of measured impact points, it was developed with a gun-

camera type of miss distance indicator in mind. For this measuring system a camera is mounted on a rifle and aligned with it. A single picture is taken just before bullet exit. This picture shows where the rifle was pointed relative to the target, for a given shot. Allowance for ballistic drop and drift during the data reduction gives an estimate of the impact point in the vertical plane for a nominal bullet trajectory. For this type of miss distance indicator the influence of round to round variation in trajectory is not of importance since aim point rather than impact point is being measured.

For miss distance indicators which do measure actual projectile trajectories or impact points — such as radar, acoustic, or electro-optical devices — ballistic noise is a consideration. The user should compute the expected values for low hits and alternating strikes. If the experienced number of low hits or alternating strikes is no greater than the expected value, then the ability of the test variable (e.g., type of ammunition, type of weapon) to improve the number of low hits or alternating strikes must be considered doubtful. In this case the user may wish to reduce the weight given to these portions of the index or eliminate them altogether. If the shooter's accuracy is already comparable to the ballistic noise, then the index of proximity will be of little help — since there is no improvement to assess.

D. Weighting Factor Rationale

As part of the development of the index, weighting factors were selected based on rationale developed by the project staff. The index of proximity treats two basic areas. The first is the ability of the shooter to correct misses and place succeeding rounds closer to the target. The second area treated is the ability of the system to place the rounds into preferred zones (i.e., low and bracketing) with the thought that this type of placement is more suppressive than other placements. It would appear that being progressively closer to the target is more important than preferred placement; because improving proximity leads to improving hit probability, and against a point target a hit produces excellent suppression. On the other hand a low round (that is, one which hits in front of the target) will probably provide both audio and visual stimuli to the target, and the nearness of the impact is readily assessed by the target. A high round will provide only an audio stimulus and, beyond a few feet, the attenuation is so great that the target may not experience a feeling of nearness. Thus, in situations where the target is so far away or so well concealed that the probability of a hit is very small, it seems reasonable that preferred placement of the rounds would be a significant contributor to suppressiveness. Taking account of both of these general philosophies, it was decided that the improving proximity should receive a combined weighting factor of 0.6 and the preferred placement of the round 0.4. That is,

$$w_1 + w_2 + w_3 = .60$$

$$w_4 + w_5 = \underline{.40}$$

$$\Sigma w = 1.00$$

Where:

w_1 = weighting factor, relative nearness of sequential rounds

w_2 = weighting factor, absolute nearness of closest round

w_3 = weighting factor, rate of closure

w_4 = weighting factor, low hits

w_5 = weighting factor, bracketing target

Within the first group, which defines improving proximity, it was thought that being able to correct well after a poor first round and being able to get an impact very close to the target were of equal value and of considerably more value than having each round closer than the preceeding one. This is particularly true if the gunner is trying to bracket the target and at the same time get closer with each shot. On the basis of this reasoning the weights were selected as

$$w_1 = .10$$

$$w_2 = .25$$

$$w_3 = \underline{.25}$$

$$.60$$

In evaluating the terms pertaining to the preferential placement of the rounds, it was reasoned that rounds hitting in front of the target would tend to be more suppressive than the bracketing effect (because the target would probably be able to better judge the nearness of the rounds hitting in front of him and, therefore, develop a sense of impending danger). It was also reasoned that a low impact should be approximately comparable to the rate of closure or absolute nearness of the closest impact. These considerations led to:

$$w_4 = .25$$

$$w_5 = \underline{.15}$$

$$.40$$

E. Rules for Scoring

In order to provide for uniformity in computing the index of proximity the following rules have been adopted. These rules give the user a tool for rendering hard and fast decisions in those situations where ambiquity is prevalent in the collected data.

1. Exclude all first round hit missions.
2. All impacts on the horizontal reference axis are considered to be low rounds. Assign a negative value to the (0) y coordinate.
3. A reversal of sign for error correction scoring is associated with an impact on the vertical reference axis.
4. If a round hits the target, assume that it also crossed the vertical centerline (i.e., give the round credit for bracketing the target).
5. The scoring of adjacent rounds i, (i + 1)..... which have the same radial miss distance is adjusted in the direction to improve the score for relative proximity (i.e., the (i + 1) round is considered to be closer than the ith round if both have the same miss distance).
6. $r_{min} = 0$ for a hit on the standard target.
7. Mission terminates for scoring purposes when a hit is achieved.

F. Sample Calculation of I_p

The computation sheet shown in Figure 7 is designed to facilitate the calculation of the index of proximity.

The computation sheet is completed as follows:

1. Enter shot numbers and coordinates of serially fired rounds. (Columns 1, 2, 3)
2. Select and enter a value for ρ and values for the weight-in factors w_1 through w_5.
3. Calculate R_i for all i. (Column 4)
4. Find and enter the value for r_ρ - this is the <u>first</u> value in 4 which is smaller than ρ.
5. Subtract R_{i+1} from R_i. If $R_i - R_{i+1} > 0$, place a $\surd$ in Column 5 on the line for R_{i+1}.
6. Determine k, m, j and h using the relations:

   k = number of times sign alternates in Column 2.

   m = total number of negative coordinates in Column 3.

   j = total number of shots for which $R_i < \rho$ (Column 4).

   h = number of $\surd$ marks in Column 5.
7. Find n, the number of rounds in Column 1.
8. Find r_{min}, the smallest value in Column 4.
9. Substitute all appropriate values found above into expressions for f_1 through f_5.
10. Compute I_o.

①	②	③	④	⑤
Shot Number	Coordinates		$R_i = [X_i^2 + Y_i^2]^{1/2}$	Is $R_i - R_{i+1} > 0$
	X	Y		

n =	k =	m =	j =	h =

$f_1 = [\frac{h}{n-1}]w_1 =$

$f_2 = [\frac{m}{n}]w_4 =$

$f_3 = [\frac{k}{n-1}]w_5 =$

$\frac{j}{n} =$

$f_4 = \left[\frac{\rho - r_{min}}{\rho}\right] w_2 =$

$f_5 = \frac{2}{n}\left[\frac{r_\rho - r_{min}}{r_\rho}\right] w_3 =$

$\rho =$

$r_\rho =$

$r_{min} =$

Weighting Factors
$w_1 =$
$w_2 =$
$w_3 =$
$w_4 =$
$w_5 =$

$I_\rho = \frac{j}{n}[f_1 + f_2 + f_3] + f_4 + f_5 =$

FIGURE 7. SAMPLE COMPUTATION SHEET FOR I_p

The following data are used to illustrate the calculation of I_p. This set of data is subjectively described as ten "good" shots.

Shot Number	Coordinates	
	X	Y
1	-8	-1
2	+6	+2
3	-5	+1
4	+5	-1
5	+2	-1
6	-1	-1
7	-1	+1
8	-1	-0
9	-1	-0
10	-1	-0

TABLE I. FICTITIOUS DATA FOR ILLUSTRATIVE PURPOSES ONLY

The reader should note when reviewing this example that rule 5* applies to shot numbers 3, 4; 6, 7; and 8, 9 and 10; and that rule number 2* applies to shot numbers 8 and 9.

---

* See Section II.E., Rules For Scoring. p.31

In Section II.C.4 we developed a weighting factor rationale. The values of the weighting factors used in this example are the same as the values developed in that section. They are:

$$w_1 = .10$$

$$w_2 = .25$$

$$w_3 = .25$$

$$w_4 = .25$$

$$w_5 = .15$$

Moreover, the allowable miss circle of radius ρ was chosen such that all impact points were effective, i.e.,

$$\frac{j}{n} = 1$$

In this example the value of ρ is 13.

1	2	3	4	5
Shot Number	Coordinates		$R_i = [X_i^2 + Y_i^2]^{\frac{1}{2}}$	Is $R_i - R_{i+1} > 0$
	X	Y		
1	-8	-1	8.06	
2	+6	+2	6.32	√
3	-5	+1	5.10	√
4	+5	-1	5.10	√
5	+2	-1	2.23	√
6	-1	-1	1.14	√
7	-1	+1	1.14	√
8	-1	-0	1	√
9	-1	-0	1	√
10	-1	-0	1	√

$n = 10$ $k = 4$ $m = 7$ $j = 10$ $h = 9$

$$f_1 = \left[\frac{h}{n-1}\right] w_1 = .10$$

$$f_2 = \left[\frac{m}{n}\right] w_4 = .175$$

$$f_3 = \left[\frac{k}{n-1}\right] w_5 = .066$$

$$\frac{j}{n} = 1.0$$

$$f_4 = \left[\frac{\rho - r_{min}}{\rho}\right] w_2 = .231$$

$$f_5 = \frac{2}{n}\left[\frac{r_\rho - r_{min}}{r_\rho}\right] w_3 = .044$$

$\rho = 13$

$r_\rho = 8.06$

$r_{min} = 1$

Weighting Factors
$w_1 = .10$
$w_2 = .25$
$w_3 = .25$
$w_4 = .25$
$w_5 = .15$

$$I_\rho = \frac{j}{n}[f_1 + f_2 + f_3] + f_4 + f_5 = .616$$

G. Sensitivity of I_ρ to Weighting Factor Rationale

Weighting factors have been provided so that the user can adjust the relative importance of the various aspects of the index. A limited analysis of the sensitivity of the index to the values chosen for the weighting factors is given to demonstrate that the index is not extremely sensitive to any one element. Small changes in the weighting factors do not produce grossly different magnitudes for the overall index. The results are shown in Table II. In the analysis the assumed firing mission data presented in the Appendix was analyzed for two sets of weighting factors:

Weighting Factor Set A	Weighting Factor Set B
$w_1 = .10$	$w_1 = .20$
$w_2 = .15$	$w_2 = .40$
$w_3 = .25$	$w_3 = .40$
$w_4 = .25$	$w_4 = 0$
$w_5 = .15$	$w_5 = 0$

In Set B the weighting factors associated with low rounds and bracketing the target have been set equal to zero. Thus, we have essentially negated considerations of preferential placement of the rounds and are computing solely on the accuracy aspects of sequential nearness, closest round, and rate of closure. Two conclusions can be drawn from this analysis. First,

changes in the weighting factors gave meaningful, but not excessive, changes in the indices. Second, the good shooter - that is, the one who scores well when w_4 and w_5 are zero, is not penalized when these less clearly substantiated criteria relating to suppression (low hits and bracketing) are introduced into the index. Note that four good shots were better than four bad shots for both sets of weighting factors. Also, four good shots and a hit was always better than four good shots or four bad shots. Percentage-wise the four bad shots improved more quickly when w_4 and w_5 assumed positive values because the fact that all of the rounds were low in this mission contributed significantly to an otherwise poor score.

Mission Description	Weighting Factors	
	$w_1 = .10$ $w_2 = .25$ $w_3 = .25$ $w_4 = .25$ $w_5 = .15$	$w_1 = .20$ $w_2 = .40$ $w_3 = .40$ $w_4 = 0$ $w_5 = 0$
	I_p	
10 bad shots	.497	.480
10 good shots	.616	.639
5 good shots and a hit	.800	.760
Fair correction, miss	.375	.639
Relatively poorer correction, miss	.364	.622
Good correction and a hit *	.8125	.800
4 bad shots	.394	.144
4 good shots	.812	.699
4 good shots and a hit	.875	.800

* Mission terminates at round 4 for scoring purposes.

TABLE II. EFFECT OF CHANGES IN THE WEIGHTING FACTOR W_i

H. Comparison of Indices for Two Fire Missions

In order to compare indicies of proximity for two firing missions we are faced with the problem of drawing inferences from a single observation. The complexity of the problem is somewhat increased because the calculated value of I_p is moderately sensitive to the number of rounds fired in each mission, and it is quite possible that we would be required to compare indicies which are calculated from different numbers of rounds.

We could adopt a simple criterion that

"bigger is better"

and test the hypothesis that

$$I_{p_1} > I_{p_2}$$

The risk level (α) here is .50 (i.e., we would be wrong 50% of the time in accepting the fact that bigger is better).

If one could argue successfully or support by test data (necessarily after the fact at this time) that a correlation exists between one or more of the "accepted" statistics (such as standard deviation) and the index of proximity as calculated herein, then it is plausible that we could infer something about the population from which each of the I_p comes.

<u>Suppose</u> we are able to establish a correlation between the calculated index and, say, the radial standard deviation. Such a correlation <u>might</u> be described as shown in Figure 8.

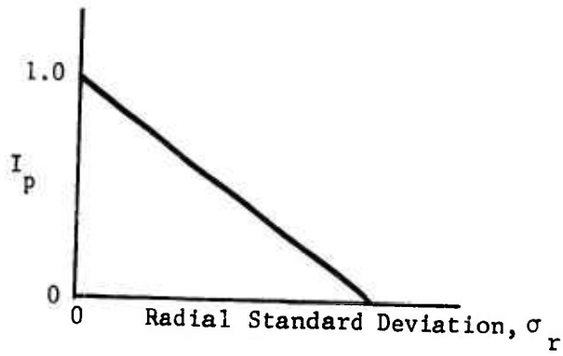

FIGURE 8. HYPOTHETICAL CORRELATION OF INDEX PROXIMITY, I_p AND RADIAL STANDARD DEVIATION σ_r

Since the probability distribution of radial variance follows the Chi-square distribution, it would be possible to compare the dispersion patterns of two firing missions by using the "F" test.

F is sometimes called the variance ratio or the Snedecor F variable, and is often denoted by F_{m_1, m_2} where m_1 and m_2 are degrees of freedom of the independent random variables.

Suppose we wish to compare two firing missions in which the following data apply.

	Mission 1	Mission 2
I_p	I_{p_1}	I_{p_2}
σr_i	σr_1	σr_2
n_i	n_1	n_2

Where:

I_{p_i} = Index of proximity for mission 1. $i = 1, 2$

σr_i = Radial standard deviation of impact points for mission 1. $i = 1, 2$

n_i = Number of round fired in mission 1 $i = 1, 2$

We wish to infer from testing the null hypothesis

$$H_o : \sigma r_i = \sigma r_2$$

against the alternatives at some significance or risk level α

$$H_1 : \sigma r_1 \neq \sigma r_2$$

that

$$I_{p_1} = I_{p_2} \quad \text{or} \quad I_{p_1} \neq I_{p_2}$$

Assume for this example that

$$I_{p_1} > I_{p_2} \text{ and } \sigma_{r_1} < \sigma_{r_2}$$

Under the null hypothesis H_o of equal variances the ratio

$$H_o = \frac{\sigma r_1}{\sigma r_2} = 1$$

is distributed as "F"

with $(2\ n_1 - 2)$, and $(2\ n_2 - 2)$ degrees of freedom $[m_1]$ $[m_2]$

The critical region for

$$H_1 \quad : \quad \frac{\sigma\ r_1}{\sigma\ r_2} \neq 1$$

is the set of values of

$$(\sigma_{r_1}\ ,\ \sigma_{r_2})$$

for which

$$\frac{\sigma\ r_1}{\sigma\ r_2} < F_{(2n_1 - 2)\ ,\ (2n_2 - 2)\ ;\ 1 - \frac{\alpha}{2}}$$

$$\frac{\sigma\ r_1}{\sigma\ r_2} > F_{(2n_1 - 2)\ ,\ (2n_2 - 2)\ ;\ \frac{\alpha}{2}}$$

If the calculated value

$$\lambda = \frac{\sigma\ r_1}{\sigma\ r_2}$$

falls within the interval as shown below

$$F_{(2n_1 - 2),\ (2n_2 - 2)\ ;\ \frac{\alpha}{2}} < \lambda < F_{(2n_1 - 2),(2n_2 - 2)\ ;\ 1 - \frac{\alpha}{2}}$$

then we would accept the hypothesis that there is no difference in the variances and infer that

$$I_{p_1} = I_{p_2}$$

Conversely, if we are outside the interval described above, we would conclude that there is a difference in the indicies calculated and that indeed

$$I_{P_1} > I_{P_2}$$

and since bigger is better, the system associated with I_{P_1} is better. In this test the risk level is α .

Since the previous comparison is strongly dependent on our ability to correlate the Index of Proximity with some statistic which we can readily calculate from the raw data, we might also consider a comparison having foundation on pragmatic grounds.

A pragmatic approach for comparing the two single firing missions which has some statistical basis would be to fit a straight line to the impact points. Figure 9 illustrates a hypothetical fit.

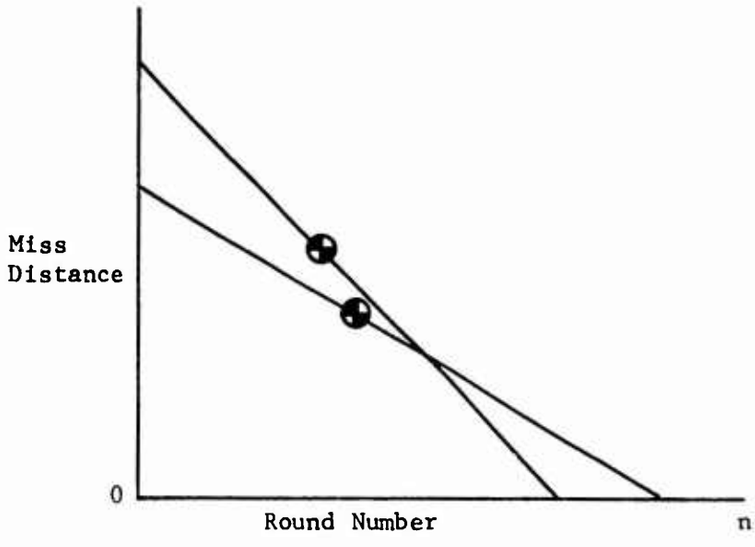

FIGURE 9. STRAIGHT LINE FITTED TO HYPOTHETICAL DATA

Note that each line has a different slope and that each line passes through the mean miss distance of the impact points in their respective groups.

If we form the ratios

$$\frac{M_{max}}{M} = K_M$$

Where

M_{max} is the larger of the slopes

and

$$\frac{\bar{R}_{max}}{\bar{R}} = K_R$$

Where

$\bar{R}_{max}$ = the larger of the mean radial miss distances,

then one of the firing missions will get K_R times closer, or close K_M times faster, or both.

Then, for a single firing mission, these ratios will indicate relative improvement between the two missions.

Several methods of comparing two individual firing missions have been presented. Their order of application should be as follows:

1. Attempt to correlate I_p with a conventional statistic. Conduct the hypothesis testing on the correlated statistic drawing inferences on same, and then refer conclusion or reserved judgement back to I_p .

2. Determine K_M , K_R - infer differences subjectively.

3. Assume "bigge. is better" and accept statistical risk of drawing inferences on a single observation.

I. Comparison of Indicies For Two or More Groups of Fire Missions

A test of significance of the difference between mean indicies of proximity is used for comparing two or more groups of fire missions. If the number of fire missions in each group is large (i.e., ≥ 30), compute the Z statistic. If the number is small, the t statistic is used. Statistical justification for the procedure above is briefly discussed below.

For two missions the hypothesis to be tested is,

$$H_o : \bar{I}_{p_1} = \bar{I}_{p_2}$$

against the alternative

$$H_1 : \bar{I}_{p_1} \neq \bar{I}_{p_2}$$

The method to be utilized will, of course, depend upon the sample size from which $\bar{I}_{p_1}$ and $\bar{I}_{p_2}$ are calculated. If n_1 and n_2 are the sample sizes from which $\bar{I}_{p_1}$ and $\bar{I}_{p_2}$ are calculated and are greater than 30, then the test statistic to be employed is,

$$Z = \frac{\bar{I}_{p_1} - \bar{I}_{p_2}}{\left[\frac{s_1^2}{n_1} + \frac{s_2^2}{n_2}\right]^{\frac{1}{2}}}$$

The criterion which we use for testing the hypothesis: reject the hypothesis if

$$Z < -Z_{\frac{\alpha}{2}} \quad \text{or} \quad Z > Z_{\frac{\alpha}{2}} \; ; \quad \text{accept the hypothesis}$$

or reserve judgement if

$$-Z_{\frac{\alpha}{2}} < Z < Z_{\frac{\alpha}{2}}$$

Where:

α = significance or risk level.

It is more likely that we will be dealing with smaller sample sizes than those indicated above. When dealing with small samples (i.e., < 30), the Student-t distribution is used instead of the normal curve and the statistic is:

$$t = \frac{\bar{I}_{p_1} - \bar{I}_{p_2}}{\left[\dfrac{(n_1 - 1)\, s_1^2 + (n_2 - 1)\, s_2^2}{n_1 + n_2 - 2}\right]^{\frac{1}{2}} \cdot \left[\dfrac{1}{n_1} + \dfrac{1}{n_2}\right]^{\frac{1}{2}}}$$

In order to use the above statistic, we make the assumption that the two samples come from populations which can be approximated closely with a normal curve <u>and</u> the assumption that the populations have equal variances. Here the criterion is: reject the hypothesis if

$$t < t_{-\frac{\alpha}{2}} \quad \text{or} \quad t > \frac{\alpha}{2} \; ; \quad \text{accept the hypothesis (or reserve}$$

judgement) if

$$t_{-\frac{\alpha}{2}} < t < t_{\frac{\alpha}{2}}$$

The above method may be generalized for K means*. In the case of $K > 2$ we have to assume that all of our samples come from populations having normal distributions with the same standard deviation, σ. Combining this assumption with the null hypothesis that the populations also have equal means we can treat the K samples as samples from one and the same population.

The variance of the K samples thus may be looked upon as an <u>estimate</u> of

$$\sigma_{\bar{I}_p} = \frac{\sigma^2}{n}$$

Using the K samples we make an estimate on the variation between sample means and on the variation within the samples (chance variation). Forming the F statistic,

$$\frac{\sigma_{between}}{\sigma_{within}}$$

with n_1 and n_2 degrees of freedom we examine for critical values

$$F_{n_1, n_2; \alpha}$$

Where:

α = our risk level.

Recall that we are testing the null hypothesis H_o.

$$H_o : \bar{I}_{p_1} = \bar{I}_{p_2} = \bar{I}_{p_3} \ldots\ldots = \bar{I}_{p_k}$$

---

* Suitable for comparing more than two groups of fire missions.

If $F_{computed} < F_{n_1, n_2; \alpha}$, then we cannot reject the null hypothesis that the K samples did not come from populations with equal means.

If we find in the above tests that we are rejecting the null hypothesis, then we can use our "bigger is better" or biggest is best criterion to make inferences on the performance level of the firing groups (i.e., if we find that there is a difference between the means, then the system yielding the higher index of proximity as calculated by the technique presented herein is better).

A fundamental assumption in applying the above methods is that the distribution of I_p can be approximated by a normal curve. If the assumption of normality cannot be met, nonparametric tests such as the sign test, U test, and runs test may be used.

III. REFERENCES

1. Booklet, Preliminary Experiments, HEL Tracer Program, draft dated July 1970.

2. Grubbs, Frank E., Statistical Measures of Accuracy for Riflemen and Missile Engineers, pub. by author, 1964.

3. Hald, A., Statistical Theory With Engineering Applications, John Wiley & Sons, Inc., 1952.

4. Gutman and Wilks, Introductory Engineering Statitics, John Wiley and Sons, Inc., 1965.

5. Freund, John E., Modern Elementary Statistics, Second Edition, Pretince-Hall, Inc., 1960.

6. Fraser, D.A.S., Non-Parametric Methods in Statistics, John Wiley & Sons, Inc., 1957.

APPENDIX

Included in this appendix are calculations of the index of proximity, I_p, for data of possible extremes of firing missions in R & D type tests.

Example No. 1

(1) Shot Number	(2) Coordinates X	(3) Coordinates Y	(4) $R_i = [X_i^2 + Y_i^2]^{\frac{1}{2}}$	(5) Is $R_i - R_{i+1} > 0$
1	-9	-1	9.05	
2	-6	+1	6.08	✓
3	+5	+2	5.38	✓
4	+10	+2	10.19	
5	+1	-2	2.23	✓
6	-3	+3	4.24	
7	-4	-2	4.47	
8	-4	-1	4.12	✓
9	-7	+2	7.28	
10	+8	-2	8.25	

$n = 10$ $\quad k = 5$ $\quad m = 5$ $\quad j = 10$ $\quad h = 4$

$$f_1 = \left[\frac{h}{n-1}\right] w_1 = .044$$

$$f_2 = \left[\frac{m}{n}\right] w_4 = .125$$

$$f_3 = \left[\frac{k}{n-1}\right] w_5 = .083$$

$$\frac{j}{n} = 1.0$$

$$f_4 = \left[\frac{\rho - r_{min}}{\rho}\right] w_2 = .207$$

$$f_5 = \frac{2}{n}\left[\frac{r_\rho - r_{min}}{r_\rho}\right] w_3 = .038$$

$\rho = 13$

$r_\rho = 9.05$

$r_{min} = 2.23$

Weighting Factors
$w_1 = .10$
$w_2 = .25$
$w_3 = .25$
$w_4 = .25$
$w_5 = .15$

$$I_\rho = \frac{j}{n}[f_1 + f_2 + f_3] + f_4 + f_5 = .497$$

FIGURE A-1. COMPUTATION OF INDEX OF PROXIMITY, I_p FOR TEN (10) BAD SHOTS

Data For Example No. 1

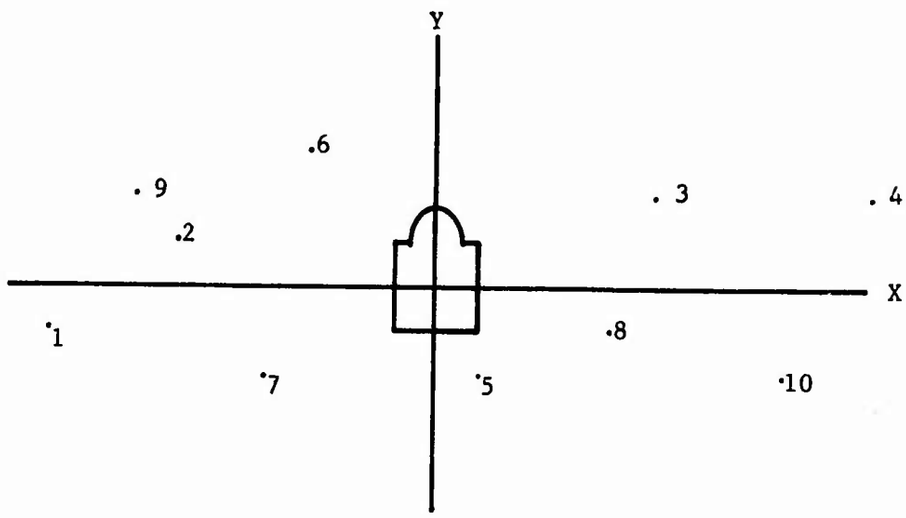

Raw Data

n	X	Y
1	-9	-1
2	-6	+1
3	+5	+2
4	+10	+2
5	+1	-2
6	-3	+3
7	-4	-2
8	-4	-1
9	-7	+2
10	+8	-2

$\rho = 13$

$w_1 = .10$

$w_2 = .25$

$w_3 = .25$

$w_4 = .25$

$w_5 = .15$

Example No. 2

(1)	(2)	(3)	(4)	(5)
Shot Number	Coordinates		$R_i = [X_i^2 + Y_i^2]^{1/2}$	Is $R_i - R_{i+1} > 0$
	X	Y		
1	-8	-1	8.06	
2	+6	+2	6.32	✓
3	-5	+1	5.10	✓
4	+5	-1	5.10	✓
5	+2	-1	2.23	✓
6	-1	-1	1.14	✓
7	-1	+1	1.14	✓
8	-1	-0	1	✓
9	-1	-0	1	✓
10	-1	-0	1	✓

$n = 10$ $\quad k = 4$ $\quad m = 7$ $\quad j = 10$ $\quad h = 9$

$$f_1 = \left[\frac{h}{n-1}\right] w_1 = .10$$

$$f_2 = \left[\frac{m}{n}\right] w_4 = .175$$

$$f_3 = \left[\frac{k}{n-1}\right] w_5 = .066$$

$$\frac{j}{n} = 1.0$$

$$f_4 = \left[\frac{\rho - r_{min}}{\rho}\right] w_2 = .231$$

$$f_5 = \frac{2}{n}\left[\frac{r_\rho - r_{min}}{r_\rho}\right] w_3 = .044$$

$\rho = 13$

$r_\rho = 8.06$

$r_{min} = 1$

Weighting Factors
$w_1 = .10$
$w_2 = .25$
$w_3 = .25$
$w_4 = .25$
$w_5 = .15$

$$I_\rho = \frac{j}{n}[f_1 + f_2 + f_3] + f_4 + f_5 = .616$$

FIGURE A-2. COMPUTATION OF INDEX OF PROXIMITY, I_p FOR TEN (10) GOOD SHOTS

Data For Example No. 2

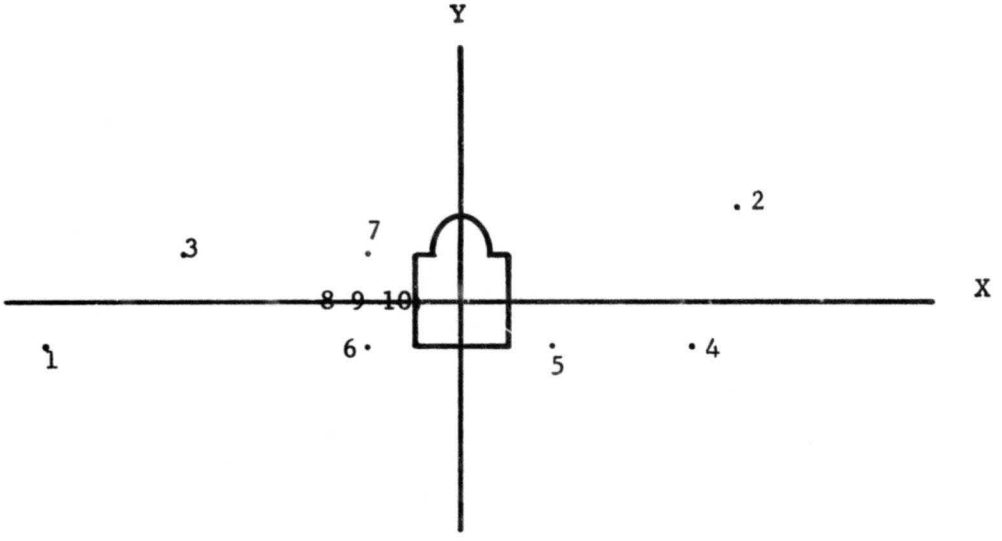

Raw Data

n	X	Y
1	-8	-1
2	+6	+2
3	-5	+1
4	+5	-1
5	+2	-1
6	-1	-1
7	-1	+1
8	-1	0
9	-1	0
10	-1	-1

$\rho = 13$

$w_1 = .10$

$w_2 = .25$

$w_3 = .25$

$w_4 = .25$

$w_5 = .15$

Example No. 3

(1) Shot Number	(2) Coordinates X	(3) Coordinates Y	(4) $R_i = [X_i^2 + Y_i^2]^{\frac{1}{2}}$	(5) Is $R_i - R_{i+1} > 0$
1	-9	-5	10.29	
2	+7	+3	7.62	✓
3	-4	-2	4.47	✓
4	+3	-1	3.16	✓
5	0	-0	0	✓

$n = 5$ $k = 4$ $m = 4$ $j = 5$ $h = 4$

$f_1 = [\frac{h}{n-1}]w_1 = .10$

$f_2 = [\frac{m}{n}]w_4 = .20$

$f_3 = [\frac{k}{n-1}]w_5 = .15$

$\frac{j}{n} = 1.0$

$f_4 = \left[\frac{\rho - r_{min}}{\rho}\right] w_2 = .25$

$f_5 = \frac{2}{n}\left[\frac{r_\rho - r_{min}}{r_\rho}\right] w_3 = .10$

$\rho = 13$

$r_\rho = 10.29$

$r_{min} = 0$

Weighting Factors	
w_1	.10
w_2	.25
w_3	.25
w_4	.25
w_5	.15

$$I_\rho = \frac{j}{n}[f_1 + f_2 + f_3] + f_4 + f_5 = .80$$

FIGURE A-3. COMPUTATION OF INDEX OF PROXIMITY, I_p FOR 5 GOOD SHOTS AND A HIT

Data For Example No. 3

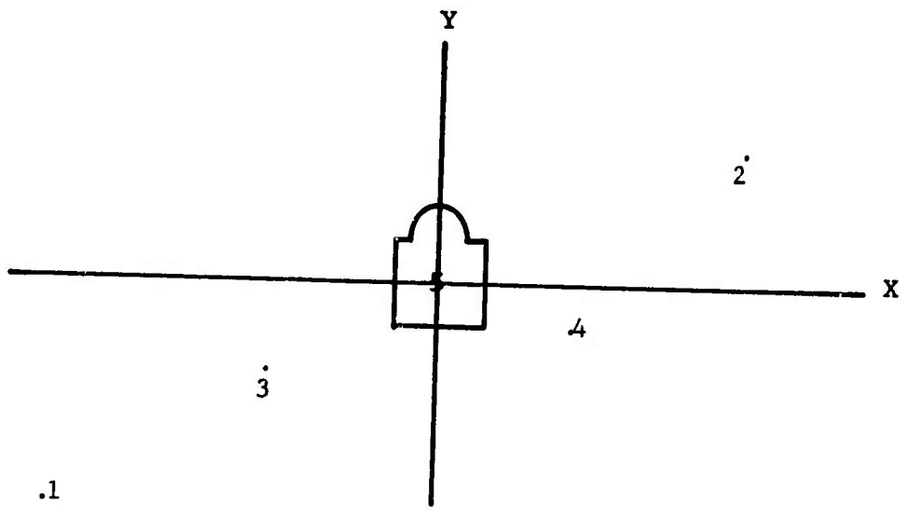

Raw Data

n	X	Y
1	-9	-5
2	+7	+3
3	-4	-2
4	+3	-1
5	0	0

$\rho = 13$

$w_1 = .10$

$w_2 = .25$

$w_3 = .25$

$w_4 = .25$

$w_5 = .15$

Example No. 4

(1) Shot Number	(2) Coordinates X	(3) Coordinates Y	(4) $R_i = [X_i^2 + Y_i^2]^{\frac{1}{2}}$	(5) Is $R_i - R_{i+1} > 0$
1	-12	+1	12.04	
2	-11	+1	11.04	✓
3	-9	+1	9.05	✓
4	-7	+1	7.07	✓
5	-4	+1	4.12	✓
6	-2	+1	2.23	✓

$n = 6$ $k = 0$ $m = 0$ $j = 6$ $h = 5$

$$f_1 = \left[\frac{h}{n-1}\right] w_1 = .10$$

$$f_2 = \left[\frac{m}{n}\right] w_4 = 0$$

$$f_3 = \left[\frac{k}{n-1}\right] w_5 = 0$$

$$\frac{j}{n} = 1.0$$

$$f_4 = \left[\frac{\rho - r_{min}}{\rho}\right] w_2 = .207$$

$$f_5 = \frac{2}{n}\left[\frac{r_\rho - r_{min}}{r_\rho}\right] w_3 = .068$$

$\rho = 13$

$r_\rho = 12.04$

$r_{min} = 2.23$

Weighting Factors
$w_1 = .10$
$w_2 = .25$
$w_3 = .25$
$w_4 = .25$
$w_5 = .15$

$$I_\rho = \frac{j}{n}[f_1 + f_2 + f_3] + f_4 + f_5 = .375$$

FIGURE A-4. COMPUTATION OF INDEX OF PROXIMITY FOR A MISSION WITH FAIR CORRECTION

Data For Example No. 4

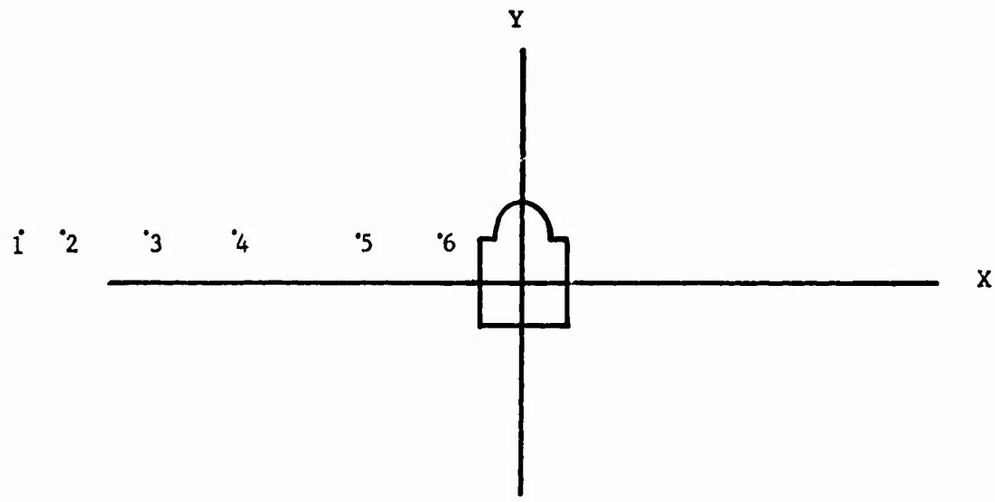

Raw Data

n	X	Y
1	-12	+1
2	-11	+1
3	-9	+1
4	-7	+1
5	-4	+1
6	-2	+1

$\rho = 13$

$w_1 = .10$

$w_2 = .25$

$w_3 = .25$

$w_4 = .25$

$w_5 = .15$

Example No. 5

(1) Shot Number	(2) Coordinates X	(3) Coordinates Y	(4) $R_i = [X_i^2 + Y_i^2]^{\frac{1}{2}}$	(5) Is $R_i - R_{i+1} > 0$
1	-7	+1	7.07	
2	-6	+1	6.08	✓
3	-5	+1	5.10	✓
4	-4	+1	4.12	✓
5	-3	+1	3.16	✓
6	-2	+1	2.23	✓

$n = 6$ $k = 0$ $m = 0$ $j = 6$ $h = 5$

$f_1 = [\frac{h}{n-1}]w_1 = .10$

$f_2 = [\frac{m}{n}]w_4 = 0$

$f_3 = [\frac{k}{n-1}]w_5 = 0$

$\frac{j}{n} = 1.0$

$f_4 = \left[\frac{\rho - r_{min}}{\rho}\right] w_2 = .207$

$f_5 = \frac{2}{n}\left[\frac{r_\rho - r_{min}}{r_\rho}\right] w_3 = .057$

$\rho = .13$

$r_\rho = 7.07$

$r_{min} = 2.23$

Weighting Factors
$w_1 = .10$
$w_2 = .25$
$w_3 = .25$
$w_4 = .25$
$w_5 = .15$

$$I_\rho = \frac{j}{n}[f_1 + f_2 + f_3] + f_4 + f_5 = .364$$

FIGURE A-5. COMPUTATION OF INDEX OF PROXIMITY, I_p FOR A MISSION WITH RELATIVELY POOR CORRECTION

Data For Example No. 5

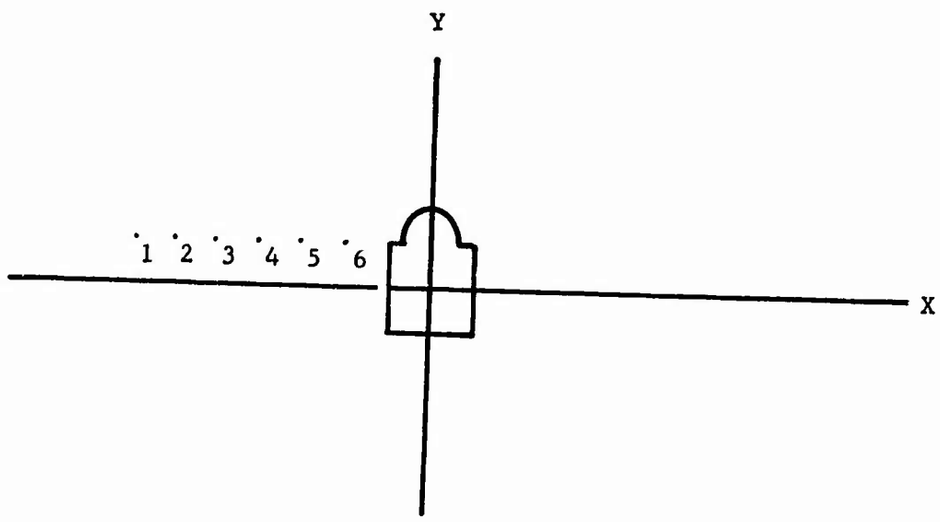

Raw Data

n	X	Y
1	-7	+1
2	-6	+1
3	-5	+1
4	-4	+1
5	-3	+1
6	-2	+1

$\rho = 13$

$w_1 = .10$

$w_2 = .25$

$w_3 = .25$

$w_4 = .25$

$w_5 = .15$

Example No. 6

(1) Shot Number	(2) Coordinates X	(3) Coordinates Y	(4) $R_i = [X_i^2 + Y_i^2]^{\frac{1}{2}}$	(5) Is $R_i - R_{i+1} > 0$
1	-12	+1	12.04	
2	+6	-2	6.32	✓
3	-3	-1	3.16	✓
4	0	-0	0	✓

$n = 4$ $k = 3$ $m = 3$ $j = 4$ $h = 3$

$f_1 = [\frac{h}{n-1}]w_1 = .10$

$f_2 = [\frac{m}{n}]w_4 = .1875$

$f_3 = [\frac{k}{n-1}]w_5 = .15$

$\frac{j}{n} = 1.0$

$f_4 = \left[\frac{\rho - r_{min}}{\rho}\right] w_2 = .25$

$f_5 = \frac{2}{n}\left[\frac{r_\rho - r_{min}}{r_\rho}\right] w_3 = .125$

$\rho = 13$

$r_\rho = 12.04$

$r_{min} = 0$

Weighting Factors	
w_1 =	.10
w_2 =	.25
w_3 =	.25
w_4 =	.25
w_5 =	.15

$$I_\rho = \frac{j}{n}[f_1 + f_2 + f_3] + f_4 + f_5 = .8125$$

FIGURE A-6. COMPUTATION OF INDEX OF PROXIMITY, I_p FOR A MISSION WITH GOOD CORRECTION AND A HIT

Data For Example No. 6

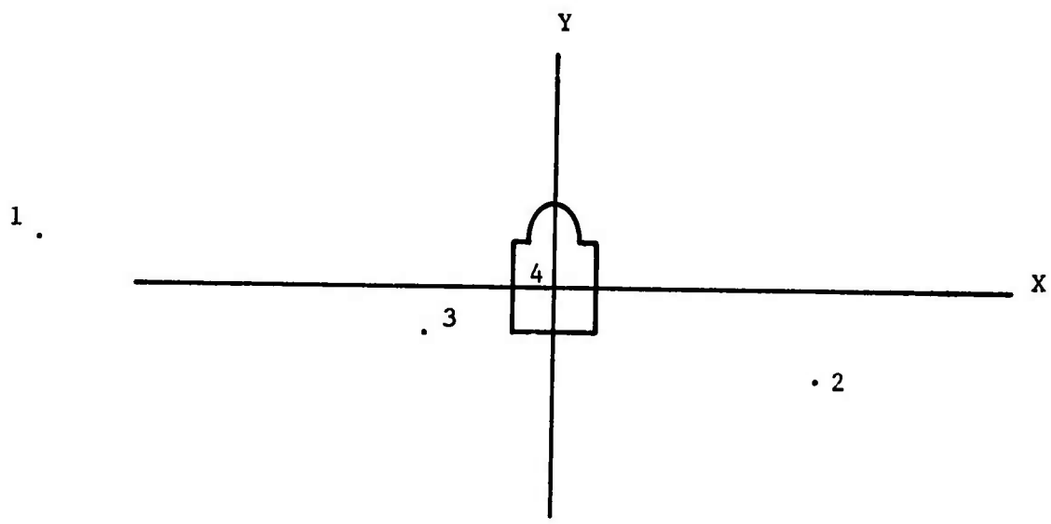

Raw Data

n	X	Y
1	-12	+1
2	+6	-2
3	-3	-1
4	0	0

$\rho = 13$

$w_1 = .10$

$w_2 = .25$

$w_3 = .25$

$w_4 = .25$

$w_5 = .15$

Example No. 7

(1)	(2)	(3)	(4)	(5)
Shot Number	Coordinates		$R_i = [X_i^2 + Y_i^2]^{\frac{1}{2}}$	Is $R_i - R_{i+1} > 0$
	X	Y		
1	-9	-5	10.29	
2	-10	-4	10.77	
3	-8	-4	8.94	✓
4	-9	-3	9.48	

$n = 4$ $k = 0$ $m = 4$ $j = 4$ $h = 1$

$f_1 = [\frac{h}{n-1}]w_1 = .033$

$f_2 = [\frac{m}{n}]w_4 = .25$

$f_3 = [\frac{k}{n-1}]w_5 = 0$

$\frac{j}{n} = 1.0$

$f_4 = \left[\frac{\rho - r_{min}}{\rho}\right] w_2 = .078$

$f_5 = \frac{2}{n}\left[\frac{r_\rho - r_{min}}{r_\rho}\right] w_3 = .033$

$\rho = 13$

$r_\rho = 10.29$

$r_{min} = 8.94$

Weighting Factors
$w_1 = .10$
$w_2 = .25$
$w_3 = .25$
$w_4 = .25$
$w_5 = .15$

$$I_\rho = \frac{j}{n}[f_1 + f_2 + f_3] + f_4 + f_5 = .394$$

FIGURE A-7. COMPUTATION OF INDEX OF PROXIMITY, I_p FOR FOUR (4) BAD SHOTS

Data For Example No. 7

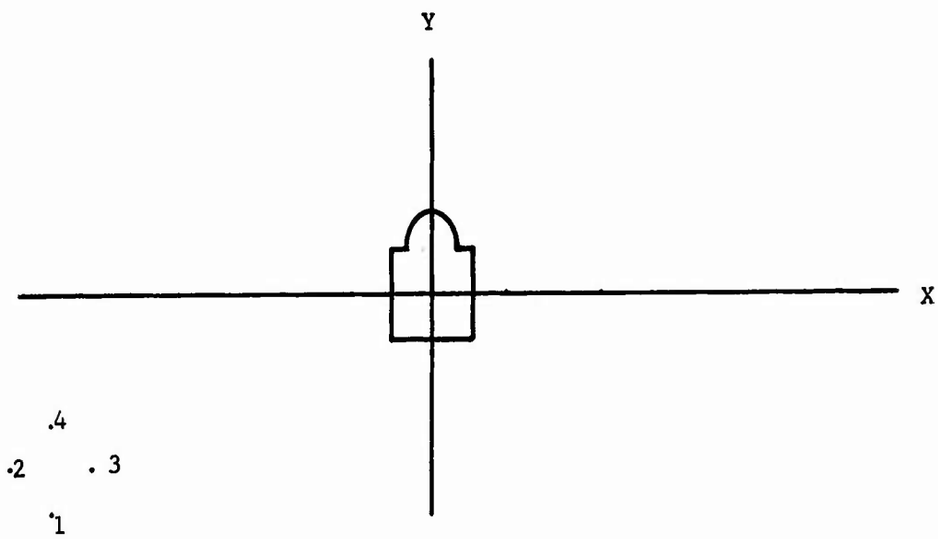

Raw Data

n	X	Y
1	-9	-5
2	-10	-4
3	-8	-4
4	-9	-3

$\rho = 13$

$w_1 = .10$

$w_2 = .25$

$w_3 = .25$

$w_4 = .25$

$w_5 = .15$

Example No. 8

(1)	(2)	(3)	(4)	(5)
Shot Number	Coordinates		$R_i = [X_i^2 + Y_i^2]^{\frac{1}{2}}$	Is $R_i - R_{i+1} > 0$
	X	Y		
1	-9	-5	10.29	
2	+4	-0	4	✓
3	-3	-0	3	✓
4	0	-2	2	✓

$n = 4$ $k = 3$ $m = 4$ $j = 4$ $h = 3$

$$f_1 = \left[\frac{h}{n-1}\right] w_1 = .10$$

$$f_2 = \left[\frac{m}{n}\right] w_4 = .25$$

$$f_3 = \left[\frac{k}{n-1}\right] w_5 = .15$$

$$\frac{j}{n} = 1.0$$

$$f_4 = \left[\frac{\rho - r_{min}}{\rho}\right] w_2 = .211$$

$$f_5 = \frac{2}{n}\left[\frac{r_\rho - r_{min}}{r_\rho}\right] w_3 = .101$$

$\rho = 13$

$r_\rho = 10.29$

$r_{min} = 2$

Weighting Factors

$w_1 = .10$

$w_2 = .25$

$w_3 = .25$

$w_4 = .25$

$w_5 = .15$

$$I_\rho = \frac{j}{n}[f_1 + f_2 + f_3] + f_4 + f_5 = .812$$

FIGURES A-8. COMPUTATION OF INDEX OF PROXIMITY, I_p FOR FOUR (4) GOOD SHOTS

Data For Example No. 8

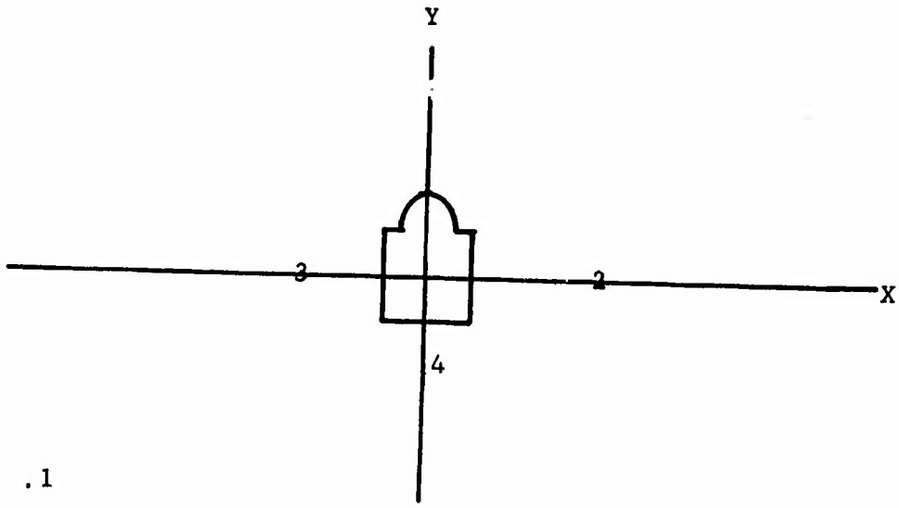

Raw Data

n	X	Y
1	-9	-5
2	4	0
3	-3	0
4	0	-2

$\rho = 13$

$w_1 = .10$

$w_2 = .25$

$w_3 = .25$

$w_4 = .25$

$w_5 = .15$

Example No. 9

(1)	(2)	(3)	(4)	(5)
Shot Number	Coordinates		$R_i = [X_i^2 + Y_i^2]^{1/2}$	Is $R_i - R_{i+1} > 0$
	X	Y		
1	-9	-5	10.29	
2	+4	-0	4	✓
3	-3	-0	3	✓
4	0	-0	0	✓

$n = 4$ $\quad k = 3$ $\quad m = 4$ $\quad j = 4$ $\quad h = 3$

$$f_1 = \left[\frac{h}{n-1}\right] w_1 = .10$$

$$f_2 = \left[\frac{m}{n}\right] w_4 = .25$$

$$f_3 = \left[\frac{k}{n-1}\right] w_5 = .15$$

$$\frac{j}{n} = 1.0$$

$$f_4 = \left[\frac{\rho - r_{min}}{\rho}\right] w_2 = .25$$

$$f_5 = \frac{2}{n}\left[\frac{r_\rho - r_{min}}{r_\rho}\right] w_3 = .125$$

$\rho = 13$

$r_\rho = 10.29$

$r_{min} = 0$

Weighting Factors
$w_1 = .10$
$w_2 = .25$
$w_3 = .25$
$w_4 = .25$
$w_5 = .15$

$$I_\rho = \frac{j}{n}[f_1 + f_2 + f_3] + f_4 + f_5 = .875$$

FIGURE A-9. COMPUTATION OF INDEX OF PROXIMITY, I_p FOR FOUR (4) GOOD SHOTS AND A HIT

Data For Example No. 9

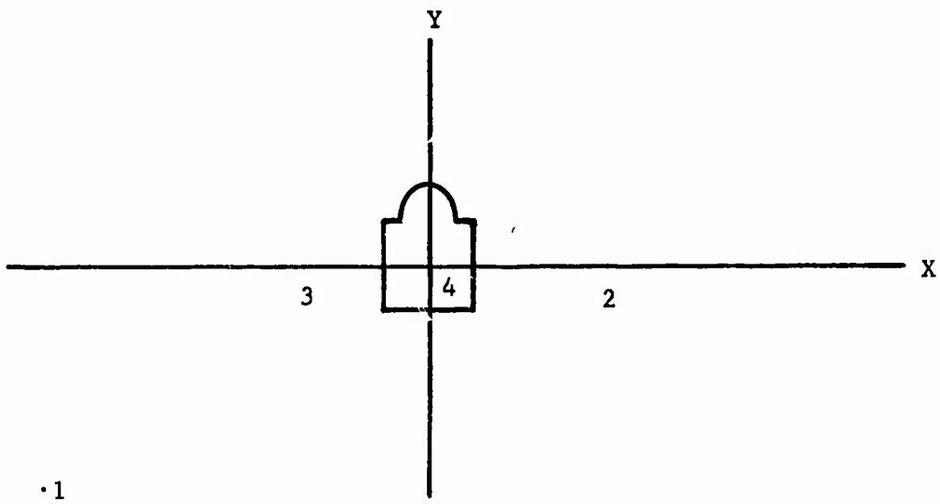

Raw Data

n	X	Y
1	-9	-5
2	+4	0
3	-3	0
4	0	0

$\rho = 13$

$w_1 = .10$

$w_2 = .25$

$w_3 = .25$

$w_4 = .25$

$w_5 = .15$