AD722488

PAPER P-679

INFINITE ARRAYS OF SUB-ARRAY ANTENNAS

W. Wasylkiwskyj
W. K. Kahn

September 1970

D D C
RECEIVED
MAY 7 1971
D

DISTRIBUTION STATEMENT A
Approved for public release;
Distribution Unlimited

INSTITUTE FOR DEFENSE ANALYSES
SCIENCE AND TECHNOLOGY DIVISION

Reproduced by
NATIONAL TECHNICAL
INFORMATION SERVICE
Springfield, Va. 22151

IDA Log No. HQ 70-11796
Copy 64 of 80 copies

ACCESSION for
CFSTI WHITE SECTION
DDC BUFF SECTION
UNANNOUNCED
JUSTIFICATION
BY
DISTRIBUTION/AVAILABILITY CODES
DIST. AVAIL. and/or SPECIAL
A

The work reported in this publication was conducted under IDA's Independent Research Program. Its publication does not imply endorsement by the Department of Defense or any other Government agency, nor should the contents be construed as reflecting the official position of any Government agency.

This document has been approved for public release and sale; its distribution is unlimited.

PAPER P-679

INFINITE ARRAYS OF SUB-ARRAY ANTENNAS

W. Wasylkiwskyj
W. K. Kahn

September 1970

IDA

INSTITUTE FOR DEFENSE ANALYSES
SCIENCE AND TECHNOLOGY DIVISION
400 Army-Navy Drive, Arlington, Virginia 22202
IDA Independent Research Program

ABSTRACT

A unified network approach to the analysis of infinite regular arrays of antennas is presented. The periodically repeated constituent of the array is itself regarded as a sub-array, the sub-array taking a variety of particular forms. With the appropriate choice of sub-array, the same formulation yields as special cases the uniform linear, planar, and cylindrical arrays as well as such arrays comprising several heterogeneous elements or multimode elementary antennas.

CONTENTS

I.	Introduction	1
II.	Difference Equation Formulation for an Array of Sub-Array Antennas	3
III.	A Linear Array of Dipole Sub-Arrays	8
	Appendix--Transformation of the Series for $Q_{12}(\alpha)$ into a More Rapidly Convergent Representation	14
	References	17

I. INTRODUCTION

A unified network approach to the analysis of infinite regular arrays of antennas is presented. The periodically repeated constituent of the array is itself regarded as a sub-array, the sub-array taking a variety of particular forms. With the appropriate choice of sub-array, the same formulation yields as special cases the uniform linear, planar, and cylindrical arrays as well as such arrays comprising several heterogeneous elements or multimode elementary antennas. Three possibilities are illustrated in Figs. 1a through 1c. Figure 1a shows an in-line arrangement of 2-element sub-arrays; a typical sub-array is delineated by the dashed line. Similarly, Fig. 1b shows an arrangement of linear sub-arrays, each sub-array extending in a direction orthogonal to the principal array axis. The planar array illustrated is finite in one dimension; however, this restriction to finite sub-arrays is not essential. Figure 1c shows a cylindrical array. Each circular array may conveniently be regarded as a sub-array, bringing such (glide symmetric) cylindrical arrays within the purview of the general scheme. The network problem for the antenna terminal quantities is formulated as an infinite order finite-difference equation. The solution is

obtained as a matrix generalization to arrays of sub-array antennas of the technique presented in Reference 1.

The finite-difference formulation is applicable to arrays of quite general antennas and is not restricted to apertures in a conducting plane or cylinder. It is only necessary that the network parameters characterizing the interaction among the elementary antennas be known. For minimum scattering antennas, these network parameters may be calculated conveniently and exactly from the elementary radiation patterns, without reference to the structural type of the elements [1], [7]. The particular sub-array chosen for purposes of illustration consists of two inclined dipole radiators. Only one dipole of each sub-array is excited; the remaining dipoles act as passive parasitic radiators. Quite deliberately, no physical supporting structure for the dipoles is specified. However, the parasitic dipole radiators only are interconnected in a manner to be described. The array of fed dipoles, when excited with uniform amplitude (linear phase taper), will be found to exhibit peaks in the active reflection coefficient, or, equivalently, resonance nulls or minima in the pattern of a single excited element within the array of sub-arrays environment [2], [3], [4]. It is therefore demonstrated that such resonances, existing purely as circuit properties of the array network, can in principle occur generally in linear, planar or cylindrical arrays as opposed to being necessarily limited to specific kinds of structural configurations [5]. Further, it will be seen that these resonance minima (reflection coefficient maxima) may be arbitrarily placed and variable in depth. Conversely, the

ability to control and place rapid variations in reflection coefficient with scan angle holds promise with respect to matching out variations found in any given case [8], [9].

II. DIFFERENCE EQUATION FORMULATION FOR AN ARRAY OF SUB-ARRAY ANTENNAS

Consider an infinite, uniformly spaced linear array composed of identical M-element sub-arrays as shown in Fig. 1d. The terminal voltages and currents satisfy

$$\underline{V}_n = \sum_{m} Z_{mn} \underline{I}_m \tag{1a}$$

where Z_{mn} is an MXM (open-circuit) impedance matrix coupling the mth and the nth sub-arrays; $\underline{V}_n$ and $\underline{I}_n$ are column matrices

$$\underline{V}_n = \begin{bmatrix} V_{1,n} \\ V_{2,n} \\ \cdot \\ \cdot \\ \cdot \\ V_{M,n} \end{bmatrix}, \quad \underline{I}_n = \begin{bmatrix} I_{1,n} \\ I_{1,n} \\ \cdot \\ \cdot \\ \cdot \\ I_{M,n} \end{bmatrix} .$$

The matrix Z_{mn} has the form

$$Z_{mn} = \begin{bmatrix} Z_{11,mn} & Z_{12,mn} & \cdots & Z_{1M,mn} \\ Z_{21,mn} & Z_{22,mn} & \cdots & Z_{2M,mn} \\ \cdots & \cdots & \cdots & \cdots \\ Z_{M1,mn} & Z_{M2,mn} & \cdots & Z_{MM,mn} \end{bmatrix} .$$

It follows from Lorentz reciprocity that

$$Z_{mn} = \tilde{Z}_{nm}$$

wherein $\sim$ denotes the transposed matrix. The translational symmetry of the infinite linear array implies that Z_{mn} is, in fact, only a function of the difference $\nu = m - n$; thus,

$$Z_\nu = \tilde{Z}_{-\nu} \ .$$

Let Z_g be the diagonal matrix containing internal impedances of the driving generators, i.e.,

$$Z_g = \text{diag}\left[Z_{g1} Z_{g2} \ . \ . \ . \ Z_{gN}\right] = R_g + j\,X_g \ .$$

Then the array may alternatively be regarded as being excited by incident waves $\underline{a}_n$

$$2R_g^{1/2}\,\underline{a}_n = \underline{V}_n + Z_g \underline{I}_n \ . \tag{2a}$$

Since the internal impedances Z_{gn} are, in general, complex the reflected waves $\underline{b}_n$ are given by

$$2R_g^{1/2}\,\underline{b}_n = \underline{V}_n - Z_g^* \underline{I}_n \ . \tag{2b}$$

Explicitly then, the currents $\underline{I}_n$ produced by the incident waves $\underline{a}_n$ satisfy

$$\lim_{N\to\infty} \sum_{\nu=-N}^{N} Z_\nu \underline{I}_{n+\nu} + Z_g \underline{I}_n = 2R_g^{1/2}\,\underline{a}_n \ . \tag{1b}$$

The solution of (1b) for $\underline{I}_n$ with arbitrary excitations $\underline{a}_n$ may be obtained by recognizing that the $\underline{I}_n$ and $\underline{a}_n$ must be coefficients of (matrix) Fourier series (cf. [1] for the case M = 1). Thus, substituting

$$\underline{I}_n = \frac{1}{2\pi} \int_{-\pi}^{\pi} \underline{I}(\xi) e^{-jn\xi} \, d\xi \quad , \tag{3a}$$

$$\underline{a}_n = \frac{1}{2\pi} \int_{-\pi}^{\pi} \underline{A}(\xi) \, e^{-jn\xi} \, d\xi \quad , \tag{3b}$$

into (1) yields

$$\underline{I}_n = \frac{1}{2\pi} \int_{-\pi}^{\pi} \left\{ \left[Q(\xi) + Z_s \right]^{-1} 2R_s^{1/2} \left(\sum_{m=-\infty}^{\infty} \underline{a}_m \, e^{jm\xi} \right) \right\} e^{-jn\xi} \, d\xi \ , \tag{4}$$

where the matrix $Q(\xi)$ is given by

$$Q(\xi) = \sum_{\nu=-\infty}^{\infty} Z_\nu e^{-j\nu\xi} \quad . \tag{5}$$

When only the first element of each sub-array is excited (all others being terminated in $Z_{s\ell}$) one sets in (4) $\tilde{\underline{a}}_n = [a_{1,n} \, 0 \, 0 \, . \, . \, . \, 0]$. This yields

$$I_{\ell,n} = \frac{1}{2\pi} \int_{-\pi}^{\pi} \left\{ \frac{2\sqrt{R_{s1}} \det \hat{Q}_{1\ell}(\xi) \, (-1)^{\ell+1} \sum_{m=-\infty}^{\infty} a_{1,m} \, e^{jm\xi}}{\det \hat{Q}(\xi)} \right\} e^{-jn\xi} \, d\xi \ ,$$

$$\ell = 1, 2, \ldots M, \tag{6}$$

where the matrix $\hat{Q}(\xi)$ is given by

$$\hat{Q}(\xi) = Q(\xi) + Z_g \tag{7}$$

and $\hat{q}_{1\ell}$ is the minor of $\hat{Q}$ obtained by striking out the 1st row and ℓth column. The sub-array elements $\ell = 2,3, \ldots M$ can be either physical parasitic radiators (employed, e.g., to effect an improved match of the array with scan [4]) or equivalent radiators corresponding to higher order evanescent modes in the input transmission line [2],[5]. In the following, the sub-array element $\ell = 1$ will be referred to as the driven element.

Two types of array excitations are of particular importance: one in which only one driven element is excited (all others being terminated in Z_g), while another corresponds to the excitation of all $\ell = 1$ elements by equal amplitude waves with a linear phase taper. In the former case, the currents at the driven elements are proportional to the mutual and self-coupling (scattering) coefficients. Thus, denoting these by S_{nm} and employing (2), one obtains

$$S_{nm} = \frac{b_{1,n}}{a_{1,m}}\Bigg|_{a_{1,m} = 0,\ n \neq m} = \begin{cases} -\sqrt{R_{g1}}\,\dfrac{I_{1,n}}{a_{1,m}}, & n \neq m \\ 1 - \sqrt{R_{g1}}\,\dfrac{I_{1,n}}{Q_{1m}}. \end{cases} \tag{8}$$

Setting $a_{1,m} = 0$, $m \neq n$ and $a_{1,n} = 1$ in (6) one also has

$$S_{nm} = \delta_{nm} - \frac{\sqrt{R_{g1}}}{\pi}\int_{-\pi}^{\pi} \frac{\det \hat{q}_{1n}(\xi)}{\det \hat{Q}(\xi)}\, e^{-j(n-m)\xi}\, d\xi . \tag{9}$$

When the array is excited with uniform amplitudes and a linear phase

taper one sets $a_{1,n} = e^{-jn\alpha}$ (α the phasing constant) and (6) yields

$$I_{\ell,n} = \frac{2\sqrt{R_{s1}}\ \det \hat{q}_{1\ell}(\alpha)\ (-1)^{\ell+1}}{\det \hat{Q}(\alpha)}\ e^{-jn\alpha}\ ,\ \ell = 1, 2 \ldots M\ . \tag{10}$$

Employing (10) with $\ell = 1$ together with (2a) one obtains the input (active) impedance looking into the typical driven element:

$$Z_{1N}(\alpha) = \frac{\det \hat{Q}(\alpha)}{\det \hat{q}_{11}(\alpha)} - Z_{s1}\ . \tag{11}$$

Expanding the determinant, yields

$$Z_{1N}(\alpha) = Q_{11}(\alpha) + \frac{\sum_{\ell=2}^{M} Q_{1\ell}(\alpha)\ \det \hat{q}_{1\ell}(\alpha)\ (-1)^{1+\ell}}{\det \hat{q}_{11}(\alpha)} \tag{12}$$

where Q_{11}, $Q_{1\ell}$ are (scalar) elements of Q. If the array is matched at broadside then the active reflection coefficient $\rho(\alpha)$ is

$$\rho(\alpha) = \frac{Z_{1N}(\alpha) - Z_{1N}(0)}{Z_{1N}(\alpha) + Z_{1N}(0)}\ . \tag{13}$$

In (12), the active impedance is expressed as a sum of two terms: $Q_{11}(\alpha)$ which corresponds to the active impedance of the driven elements in the absence of parasitic radiators and a sum of terms taking account of coupling among the elements of a typical sub-array. Equation (12) holds quite generally and has, in fact, been derived from pure circuit considerations, i.e., without reference to structural properties of the radiators comprising each sub-array. If one is dealing with the special case of single mode elements, then in the range of α

for which no grating lobes appear in the visible region, $Q_{11}(\alpha)$ will generally not exhibit sharp resonances and if resonance phenomena in the active reflection coefficient do appear they must necessarily be associated with the second term in (12). In particular, the possibility of such resonances exists whenever det $\hat{Q}_{11}(\alpha)$ possesses sharp minima (maxima). This has been noted by Borgiotti [5] in connection with a planar array of apertures where, in the present context, the parasitic radiators correspond to evanescent modes in the feed waveguides. The point being made here is that such resonances can be described adequately in pure network terms. The above considerations apply also to sub-array elements which are minimum-scattering (M.S.) antennas [1],[7] since they are completely defined in terms of their radiation patterns (without references to physical structures). For such antennas, the $Q_{ij}(\alpha)$ can be readily computed since the mutual impedances entering into the definitions of Z_v, eq. (1), are given explicitly in terms of element patterns [7]. Moreover, certain single mode elements (in particular, planar aperatures) can be rigorously treated as M.S. antennas [7]. In the following, a linear array of two-element sub-arrays consisting of two M.S. (dipole-type) antennas will be analyzed.

III. A LINEAR ARRAY OF DIPOLE SUB-ARRAYS

Figure 2a shows a linear array of two-element dipole sub-arrays. The dipoles are inclined at an angle $\theta_0 = \sin^{-1}\sqrt{\frac{2}{3}}$ with the array axis. The active impedance for a linear array (M = 1) containing dipoles with this particular orientation has been computed in [1]. The

active impedance has been shown to exhibit the interesting property of having a constant real part in the visible region if the inter-element spacing does not exceed $\lambda/2$. In addition, the imaginary part remains small throughout most of the visible region so that nearly perfect match is attained for a large range of scan angles. In the following, the effect on the active impedance looking into the port of the driven element is examined.

Employing (12) with M = 2, one obtains

$$Z_{IN}(\alpha) = Q_{11}(\alpha) - \frac{Q_{12}(\alpha)\, Q_{21}(\alpha)}{Q_{22}(\alpha) + Z_{L2}} \quad . \tag{14}$$

The coupling impedance matrix Z_ν for a two element sub-array is

$$Z_\nu = \begin{bmatrix} z_{11}(\nu) & z_{12}(\nu) \\ z_{21}(\nu) & z_{22}(\nu) \end{bmatrix} \quad . \tag{15}$$

Employing the results of [1] and noting that the parasitic and driven elements are identical, one obtains

$$z_{11}(\nu) \equiv z_{22}(\nu) = \begin{cases} 1 & ; \nu = 0 \\ \dfrac{je^{-jkD_1|\nu|}}{kD_1} & ; \nu \neq 0 \ . \end{cases} \tag{16}$$

Similarly, the cross-coupling terms may be written

$$z_{12}(\nu) \equiv \zeta(k|\nu D_1 + D_2|) = \frac{je^{-jk|\nu D_1 + D_2|}}{k|\nu D_1 + D_2|} \ , \tag{17a}$$

$$z_{21}(\nu) \equiv \zeta(k|\nu D_1 - D_2|) = \frac{je^{-jk|\nu D_1 - D_2|}}{k|\nu D_1 - D_2|} . \qquad (17b)$$

By virtue of (5)

$$Q_{11}(\alpha) = Q_{22}(\alpha) = \sum_{\nu=-\infty}^{\infty} z_{11}(\nu)\, e^{-j\nu\alpha} , \qquad (18a)$$

$$Q_{12}(\alpha) = \sum_{\nu=-\infty}^{\infty} z_{12}(\nu)\, e^{-j\nu\alpha} , \qquad (18b)$$

$$Q_{21}(\alpha) = \sum_{\nu=-\infty}^{\infty} z_{21}(\nu)\, e^{-j\nu\alpha} = Q_{12}(-\alpha) .$$

Using (16), (18a) is readily summed to yield

$$Q_{11}(\alpha) = Q_{22}(\alpha) =$$

$$\begin{cases} \frac{\pi}{kD_1} - \frac{j}{kD_1} \ln \left\{4 \sin \frac{|kD_1 + \alpha|}{2} \sin \frac{|kD_1 - \alpha|}{2}\right\}, & |\alpha| < kD_1 < \pi , \\ -\frac{j}{kD_1} \ln \left\{4 \sin \frac{|kD_1 + \alpha|}{2} \sin \frac{|kD_1 - \alpha|}{2}\right\}, & |kD_1| < |\alpha| < \pi . \end{cases} \qquad (19)$$

Equation (19) is, of course, identical with the active impedance in the absence of a parasitic element as given in [1].

The series for $Q_{12}(\alpha)$, i.e., eqs. (17) and (18b), cannot be summed in closed form. By summing all the terms having a $1/\nu$ dependence one obtains a representation which is more suitable for numerical computation than the original series. This is described in the Appendix. The result is

$$Q_{12}(\alpha) = Q_{21}(-\alpha) = \frac{je^{-jkD_2}}{kD_2} - \cos kD_2 + h(D_1, D_2) \tag{20}$$

$$+ \frac{j}{kD_1}\left[\alpha \sin kD_2 - e^{jkD_2} \ln 2 \sin \frac{|kD_1 - \alpha|}{2} - e^{-jkD_2} \ln 2 \sin \frac{|kD_1 + \alpha|}{2}\right]$$

$$+ \frac{jD_2}{kD_1} \sum_{\nu=1}^{\infty} \left[\frac{e^{-j[\nu(kD_1 - \alpha) - kD_2]}}{\nu(\nu D_1 - D_2)} - \frac{e^{-j[\nu(kD_1 + \alpha) + kD_2]}}{\nu(\nu D_1 - D_2)}\right],$$

where

$$h(D_1, D_2) = \begin{cases} \frac{\pi}{kD_1} \cos kD_2 \; ; & |\alpha| < kD_1 \; , \\ \frac{-j\pi}{kD_1} \sin kD_2 \; ; & kD_1 < \alpha < \pi \; , \\ \frac{j\pi}{kD_1} \sin kD_2 \; ; & -\pi < \alpha < -kD_1 \; . \end{cases}$$

In the absence of external interconnections among the parasitic elements, Fig. 2a, Z_{s2} in (14) is a fixed (i.e., scan independent) terminating impedance. If the parasitic elements are interconnected through external impedances Z_1 and Z_2 as shown in Fig. 2b, Z_{s2} in (14) is replaced by the equivalent impedance which depends on Z_1 and Z_2 as well as on the phasing constant α [8]. Referring to Fig. 2b, the voltage at the port of the parasitic element of the nth sub-array satisfies the following difference equation:

$$\frac{V_{2,n} - V_{2,n-1}}{Z_1} + \frac{V_{2,n}}{Z_2} + I_{2,n} = \frac{V_{2,n+1} - V_{2,n}}{Z_1} \; . \tag{21}$$

For excitations (of the eigen-form) $e^{-jn\alpha}$ one has

$$V_{2,n} = V_2(\alpha)\, e^{-jn\alpha}, \; I_{2,n} = I_2(\alpha)\, e^{-jn\alpha} \; . \tag{22}$$

The above together with (21) yields

$$Z_{se}(\alpha) = \frac{V_{2,n}}{I_{2,n}} = -\frac{V_2(\alpha)}{I_2(\alpha)} = \frac{Z_1 Z_2}{Z_1 + 4Z_2 \sin^2 \frac{\alpha}{2}} \quad . \tag{23}$$

If one assumes that Z_1 and Z_2 are pure reactances, i.e., $Z_1 = jX_1$, $Z_2 = jX_2$, parallel resonance occurs for scan angles α_o satisfying

$$X_1 + 4X_2 \sin^2 \frac{\alpha_o}{2} = 0 \ . \tag{24}$$

The resonance point can be placed at any predetermined scan angle. Figure 3 shows the variation of the magnitude of the active reflection coefficient $\rho(\alpha)$ for the array in Fig. 2 looking into sub-array element 1 for several values of α_o and $X_2 = 1$. For each α_o, the array is matched at broadside and the separation of sub-arrays is $D_1 = \lambda/4$ so that the visible region is $|\alpha| < \pi/2$; D_2 is chosen to be $D_1/10$. For comparison a curve of $|\rho(\alpha)|$ in the absence of the parasitic element is included, and is seen to vary monotonically in the visible region. The pronounced peaks in the reflection coefficient occur at the resonant points α_o. Even though the reflection at α_o is quite high, it is not total, i.e., $|\rho(\alpha_o)| \neq 1$. Indeed, the maximum value attained by $|\rho(\alpha)|$ near α_o may be adjusted by varying the reactance X_2. This is demonstrated in Fig. 4.

The lack of total reflection at α_o is due to the general character of $Q(\alpha)$, which, for each α, represents the impedance matrix of a dissipative network, the dissipation being, of course, loss of energy due to radiation. Unless the equivalent network for $Q(\alpha)$ degenerates into a pure shunt structure this dissipation precludes total reflection.

Although the amount of radiated power may be very small, nevertheless it is not identically zero except in the invisible region, i.e., $|\alpha| > kD_1$.

The rapid variations introduced into $\rho(\alpha)$ by the parasitic element in the present example may in other circumstances be utilized for matching purposes. Were excited elements themselves to exhibit resonant behavior (as is known to occur in the case of multi-mode elements or an array covered by a dielectric sheet), interconnecting networks of the type shown in Figs. 2b and 5 together with a parasitic radiator could be employed to compensate for such resonances. In particular, if $Q_{11}(\alpha)$ exhibits a series resonance at α_0 then, by virtue of (14), the network in Fig. 2b is appropriate which itself is parallel resonant at ρ_0, as is evident from (23). On the other hand, were $Q_{11}(\alpha)$ to exhibit a parallel resonance, then the proper interconnecting network is that in Fig. 5. One can readily show that in this case

$$Z_{se}(\alpha) = \frac{Z_s + 4Z_1 \sin^2 \frac{\alpha}{2}}{4 \sin^2 \frac{\alpha}{2}} , \tag{25}$$

which is seen to be series resonant whenever the numerator vanishes. For such compensations to be effective, the parasitic element should not introduce additional resonances, i.e., $Q_{ss}(\alpha)$ in (14) must be a slowly varying function of α. This will usually be the case for single mode elements, or more generally, for minimum scattering antennas.

APPENDIX

TRANSFORMATION OF THE SERIES FOR $Q_{12}(\alpha)$ INTO A MORE RAPIDLY CONVERGENT REPRESENTATION

Employing eqs. (17) and (18b), the series representation for $Q_{12}(\alpha)$ is

$$Q_{12}(\alpha) = \frac{j}{k} \sum_{\nu=-\infty}^{\infty} \frac{e^{-j(k|D_2 + \nu D_1| + \nu\alpha)}}{|D_2 + \nu D_1|} . \qquad \text{(A1)}$$

The above can be written in the alternate form

$$Q_{12}(\alpha) = \frac{je^{-jkD_2}}{kD_2} + \frac{j}{k} \sum_{\nu=1}^{\infty} \frac{e^{-j\nu(kD_1 + \alpha)}}{\nu D_1 + D_2} e^{-jkD_2} + \qquad \text{(A2)}$$

$$+ \frac{j}{k} \sum_{\nu=1}^{\infty} \frac{e^{-j\nu(kD_1 - \alpha)}}{\nu D_1 - D_2} e^{+jkD_2}.$$

Since the terns for large ν decrease as $1/\nu$, the series converges slowly and is not useful for numerical computations. A more rapidly convergent representation is obtained by employing the following identity:

$$\frac{1}{\nu D_1 \pm D_2} = \sum_{\ell=0}^{p-1} \frac{(\mp D_2)^{\ell}}{(\nu D_1)^{\ell+1}} + \left(\mp \frac{D_2}{\nu D_1}\right)^{p} \frac{1}{\nu D_1 \pm D_2} , \qquad \text{(A3)}$$

which holds for arbitrary integers p.

Substituting the above into the infinite series in (A2) yields the following:

$$\sum_{\nu=1}^{\infty} \frac{e^{-j\nu(kD_1 \pm \alpha)}}{\nu D_1 \pm D_2} = \sum_{\nu=1}^{\infty} \left(\mp \frac{D_2}{\nu D_1}\right)^p \frac{e^{-j\nu(kD_1 \pm \alpha)}}{(\nu D_1 \pm D_2)} + \tag{A4}$$

$$+ \sum_{\ell=0}^{p-1} \left[\frac{\left(\mp D_2\right)^{\ell}}{D_1^{\ell+1}} \sum_{\nu=1}^{\infty} \frac{e^{-j\nu(kD_1 \pm \alpha)}}{\nu^{\ell+1}} \right].$$

The magnitudes of the terms in the first infinite series on the right of (A4) are seen to decay with ν as $1/\nu^{p+1}$ and hence improved convergence is obtained by increasing p. The second term on the right of (A4) is a sum of p infinite series which are slowly convergent. However, for p = 1 the series has a known closed form solution which is [10]:

$$f_1(\alpha) = \sum_{\nu=1}^{\infty} \frac{e^{-j\nu(kD_1 + \alpha)}}{\nu} = \tag{A5a}$$

$$= j\left(\frac{kD_1 + \alpha + (2n - 1)\pi}{2}\right) - \ln\left[2 \sin \frac{kD_1 + \alpha + 2n\pi}{2}\right],$$

$$f_2(\alpha) = \sum_{\nu=1}^{\infty} \frac{e^{-j\nu(kD_2 - \alpha)}}{\nu} = \tag{A5b}$$

$$= j\left(\frac{kD_2 - \alpha + (2m - 1)\pi}{2}\right) - \ln\left[2 \sin \frac{kD_2 - \alpha + 2m\pi}{2}\right],$$

where n, m are natural numbers satisfying

$$0 < kD_1 + \alpha + 2n\pi < 2\pi \quad , \tag{A6}$$

$$0 < kD_1 - \alpha + 2m\pi < 2\pi \ . \tag{A7}$$

Employing (A5) and setting $p = 1$ in (A4), one obtains eq. (20). For $p > 1$ one has series of the form

$$\sum_{\nu=1}^{\infty} \frac{e^{j\nu(kD_1 \pm \alpha)}}{\nu^p} \ ,$$

which can be generated by repeated integrations (with limits, e.g., between 0 and α) of the left side of (A5) with respect to α. The right side of (A5) then yields definite integrals of the logarithmic function which can be computed numerically. (For $p = 2$ the resulting integral, known as Clausen's integral, has been tabulated [10].)

REFERENCES

[1] W. Wasylkiwskyj and W. K. Kahn, "Mutual Coupling and Element Efficiency for Infinite Linear Arrays," Proc. IEEE, Vol. 56, No. 11, pp. 1901-1907 (November 1968).

[2] G. F. Farrel, Jr., and D. H. Kuhn, "Mutual Coupling in Infinite Planar Arrays of Rectangular Waveguide Horns," IEEE Trans. on Antennas and Propagation, Vol. AP-16, pp. 405-414, (July 1968).

[3] G. H. Knittel, A. Hessel and A. A. Oliner, "Element Pattern Nulls in Phased Arrays and Their Relation to Guided Waves," Proc. IEEE, Vol. 56, No. 11, pp. 1822-1836, (November 1968).

[4] A. Hessel and G. H. Knittel, "A Loaded Ground Plane for the Elimination of Blindness in a Phased Array Antenna," 1969 G-AP International Symposium, (Digest pp. 163-169).

[5] G. V. Borgiotti, "Modal Analysis of Periodic Planar Phased Arrays of Apertures," Proc. IEEE, Vol. 56, No. 11, pp. 1881-1900, (November 1968).

[6] B. L. Diamond, "A Generalized Approach to the Analysis of Infinite Planar Array Antennas," Proc. IEEE, Vol. 56, No. 11, pp. 1837-1851, (November 1968).

[7] W. Wasylkiwskyj and W. K. Kahn, "Theory of Mutual Coupling Among Minimum Scattering Antennas," IEEE Trans. Antennas and Propagation, Vol. AP-18, pp. 209-216, (March 1970).

[8] P. W. Hannan, P. S. Lerner and G. H. Knittel, "Impedance Matching a Phased-Array Antenna Over Wide Scan Angles by Connecting Circuits," IEEE Transactions on Antennas and Propagation, Vol. AP-13, No. 7, pp. 28-34, (January 1965).

[9] P. W. Hannan, "Proof that a Phased-Array Antenna Can Be Impedance Matched for All Scan Angles," Radio Science, Vol. 2, (New Series) No. 3, pp. 361-369, (March 1967).

[10] M. Abramowitz and I. A. Stegun, eds., "Handbook of Mathematical Functions," National Bureau of Standards, Applied Mathematics Series 55, pp. 1005-1006, (1964).

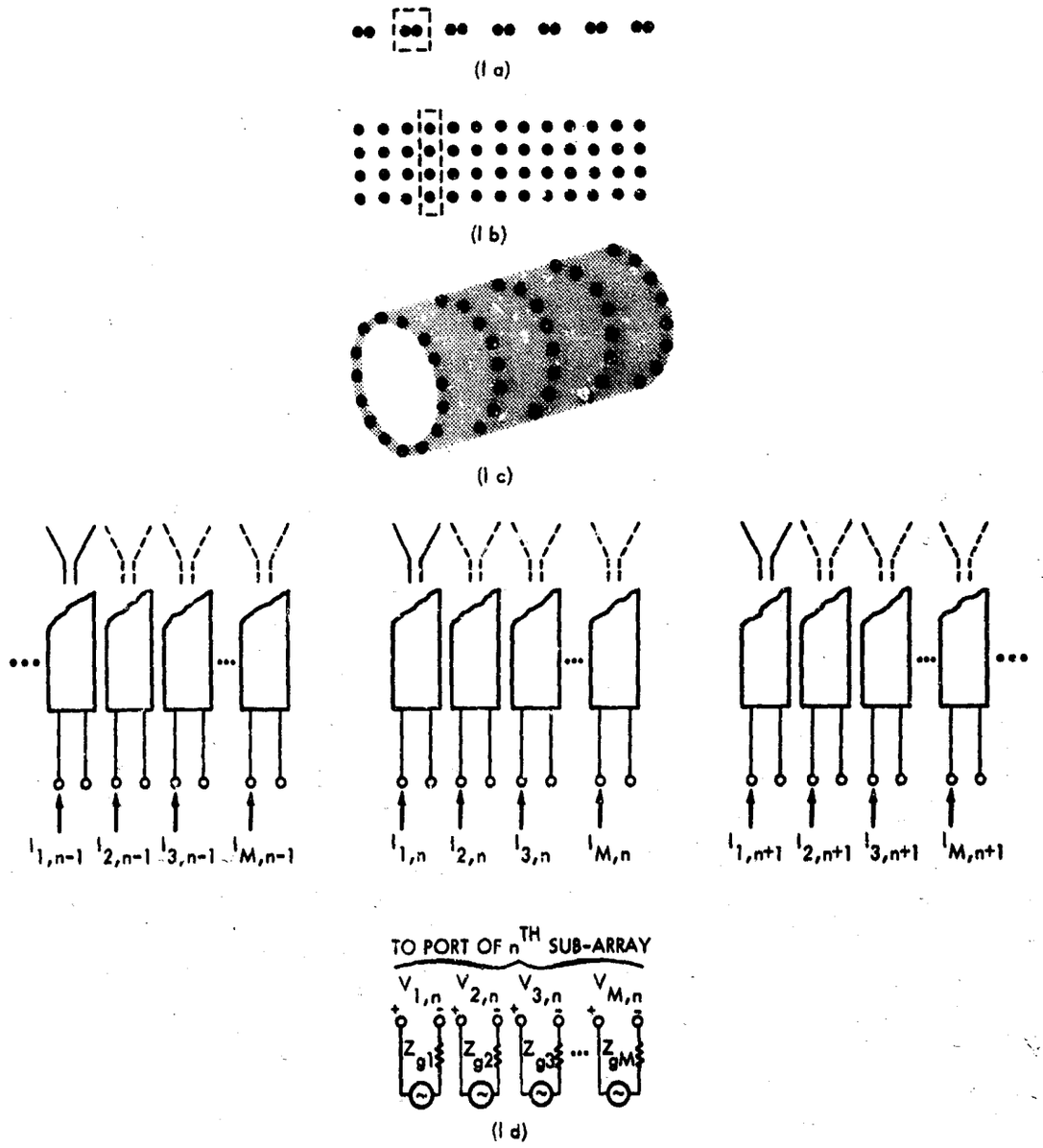

FIGURE 1. Infinite Array of Sub-Array Antennas

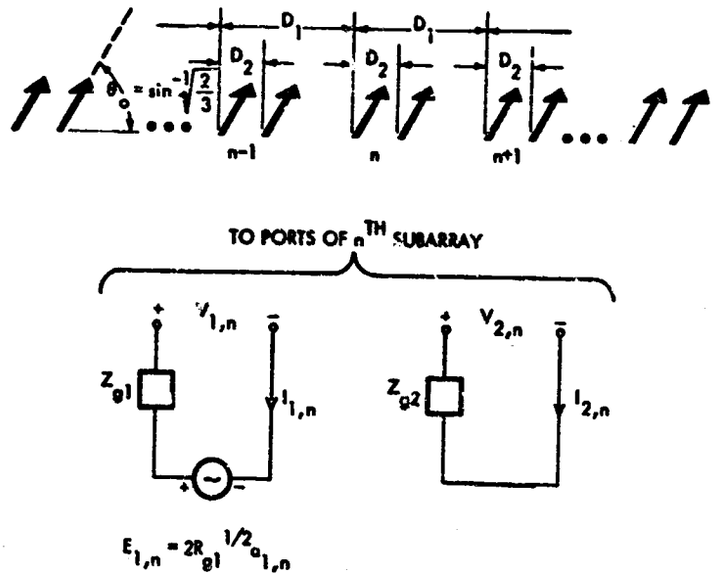

(a) No external interconnections

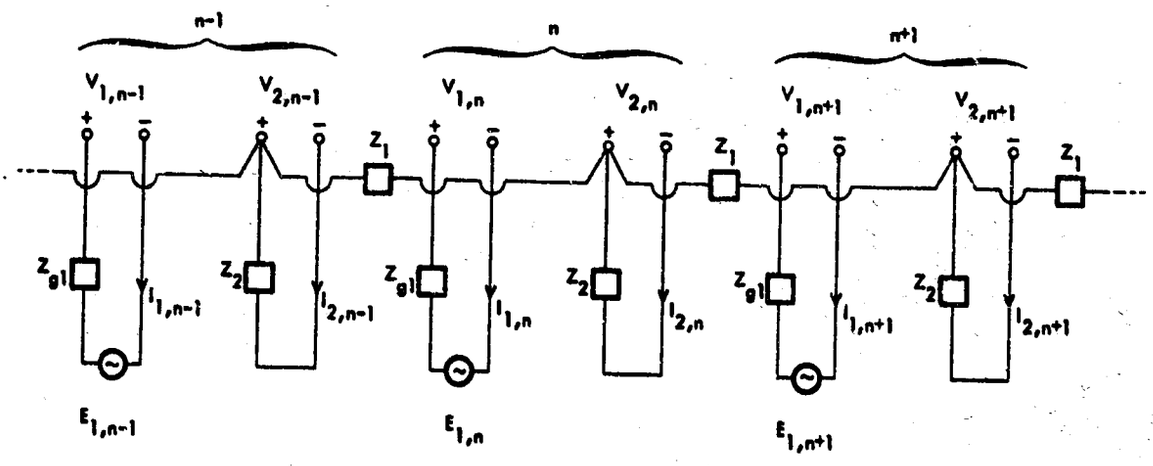

(b) Parasitic elements interconnected (parallel resonance)

FIGURE 2. Linear Dipole Array

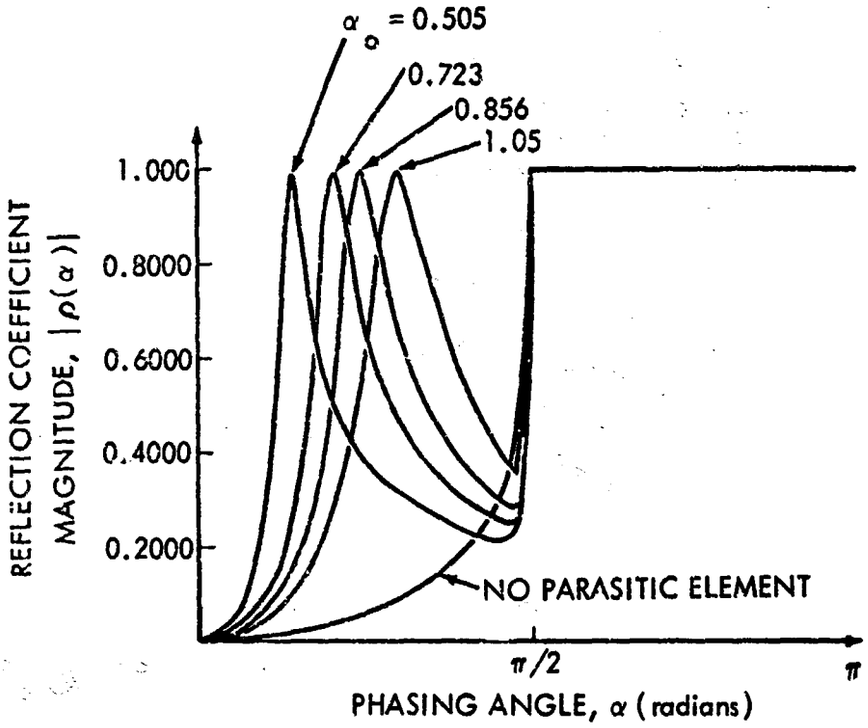

FIGURE 3. Variation of Magnitude of Reflection Coefficient with Scan (X_2=1)

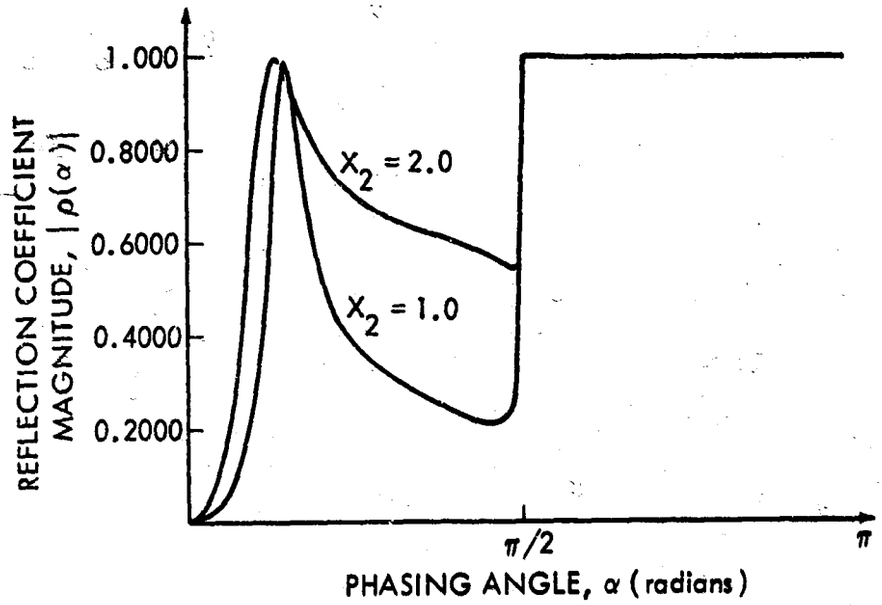

FIGURE 4. Variation of Magnitude of Reflection Coefficient with Scan for Different Tuning Conditions (α_o=.505)

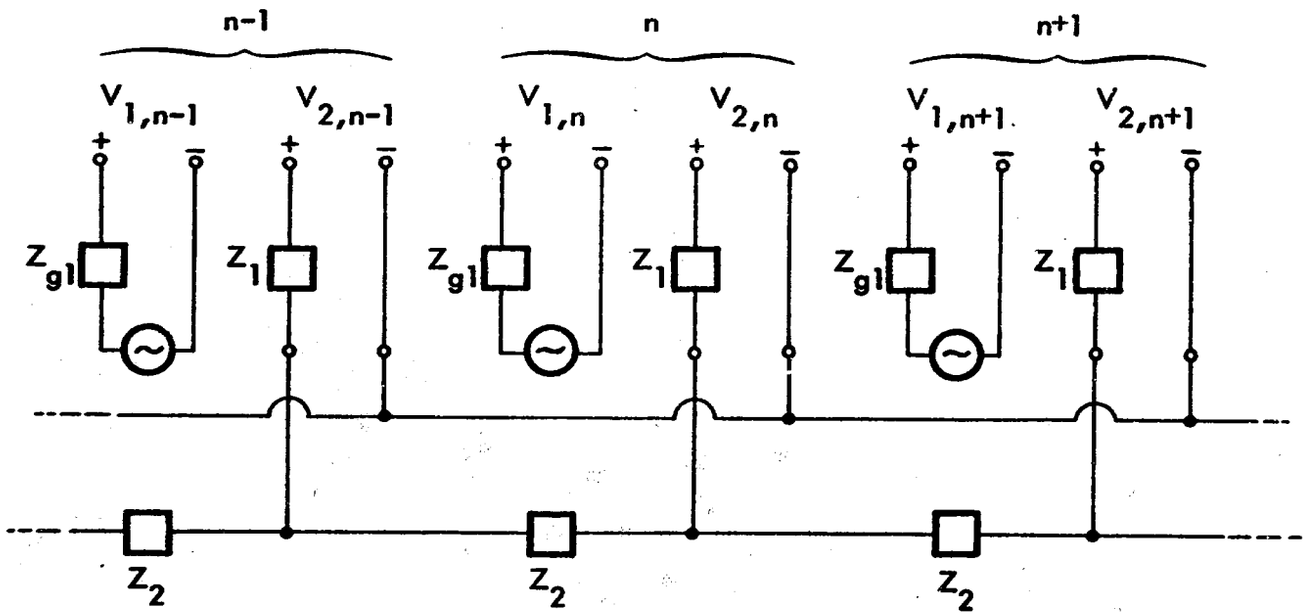

FIGURE 5. Parasitic Element Interconnections for Series Resonance

UNCLASSIFIED

Security Classification

DOCUMENT CONTROL DATA - R & D

(Security classification of title, body of abstract and indexing annotation must be entered when the overall report is classified)

1. ORIGINATING ACTIVITY (Corporate author) INSTITUTE FOR DEFENSE ANALYSES 400 Army-Navy Drive Arlington, Virginia 22202	2a. REPORT SECURITY CLASSIFICATION UNCLASSIFIED 2b. GROUP --

3. REPORT TITLE

Infinite Arrays of Sub-Array Antennas

4. DESCRIPTIVE NOTES (Type of report and inclusive dates)

Paper P-679 - September 1970

5. AUTHOR(S) (First name, middle initial, last name)

Wasyl Wasylkiwskyj and Walter K. Kahn

6. REPORT DATE September 1970	7a. TOTAL NO. OF PAGES 21	7b. NO. OF REFS 10
8a. CONTRACT OR GRANT NO b. PROJECT NO c IDA Independent Research Program d	9a. ORIGINATOR'S REPORT NUMBER(S) P-679 9b. OTHER REPORT NO(S) (Any other numbers that may be assigned this report) None	

10. DISTRIBUTION STATEMENT

This document has been approved for public release and sale; its distribution is unlimited.

11. SUPPLEMENTARY NOTES N/A	12. SPONSORING MILITARY ACTIVITY N/A

13. ABSTRACT

A unified network approach to the analysis of infinite regular arrays of antennas is presented. The periodically repeated constituent of the array is itself regarded as a sub-array, the sub-array taking a variety of particular forms. With the appropriate choice of sub-array, the same formulation yields as special cases the uniform linear, planar, and cylindrical arrays as well as such arrays comprising several heterogeneous elements or multimode elementary antennas.

DD FORM 1 NOV 65 1473

UNCLASSIFIED

Security Classification

UNCLASSIFIED

Security Classification

14 KEY WORDS	LINK A ROLE	LINK A WT	LINK B ROLE	LINK B WT	LINK C ROLE	LINK C WT
Antennas						
Antenna arrays						
Phased arrays						
Mutual coupling						

UNCLASSIFIED

Security Classification