AD0720235

AFML-TR-70-244

OFFICIAL FILE COPY

AN INVESTIGATION OF STRESS CORROSION CRACK ARREST AND CRACK PROPAGATION IN A TITANIUM ALLOY

G. J. PETRAK

UNIVERSITY OF DAYTON RESEARCH INSTITUTE

20080819 209

TECHNICAL REPORT AFML-TR-70-244

OCTOBER 1970

This document has been approved for public release and sale; its distribution is unlimited.

AIR FORCE MATERIALS LABORATORY
AIR FORCE SYSTEMS COMMAND
WRIGHT-PATTERSON AIR FORCE BASE, OHIO

OFFICIAL FILE COPY

NOTICES

When Government drawings, specifications, or other data are used for any purpose other than in connection with a definitely related Government procurement operation, the United States Government thereby incurs no responsibility nor any obligation whatsoever; and the fact that the Government may have formulated, furnished, or in any way supplied the said drawings, specifications, or other data, is not to be regarded by implication or otherwise as in any manner licensing the holder or any other person or corporation, or conveying any rights or permission to manufacture, use, or sell any patented invention that may in any way be related thereto.

Copies of this report should not be returned unless return is required by security considerations, contractual obligations, or notice on a specific document.

300 - January 1971 - CO305 - 22-71-363

AD 720235

AN INVESTIGATION OF STRESS CORROSION CRACK ARREST AND CRACK PROPAGATION IN A TITANIUM ALLOY

G. J. PETRAK

This document has been approved for public release
and sale; its distribution is unlimited.

FOREWORD

This report was prepared by the University of Dayton Research Institute, Dayton, Ohio. The work was performed under USAF Contract No. F33615-69-C-1471. The contract was initiated under Project 7381 "Materials Application," Task No. 738106, "Engineering and Design Data," and administered by the Air Force Materials Laboratory, Wright-Patterson Air Force Base, Ohio, Mr. David C. Watson (MAAE), Project Engineer.

Most of the testing portion of this investigation was performed by Mr. John Eblin of the University of Dayton Research Institute.

All (or many) of the items compared in this report were commercial items that were not developed or manufactured to meet Government specifications, to withstand the tests to which they were subjected, or to operate as applied during this study. Any failure to meet the objectives of this study is no reflection on any of the commercial items discussed herein or on any manufacturer.

This report covers work conducted from May, 1969 to January, 1970. The contractors report number is UDRI-TR-70-26.

This report was submitted by the author in May 1970.

This technical report has been reviewed and is approved.

A. Olevitch

A. Olevitch
Chief, Materials Engineering Branch
Material Support Division
Air Force Materials Laboratory

ABSTRACT

It has been demonstrated in Reference 1 that the controlling crack growth criterion in stress corrosion cracking is that derived from fracture mechanics concepts and not a criterion based on gross or net stress. This demonstration was accomplished by testing two types of cracked specimens and showing that crack arrest and crack initiation stress intensities are the same while gross and net stresses are different. However, these tests were performed on thick section material. The work reported herein was intended to check the validity of the correlation between arrest and initiation stress intensities using thin section material having higher toughness and lower yield strength than the material previously tested. The results showed crack arrest stress intensities were substantially higher than those for crack initiation when testing thin materials. It was also observed from the test results that when testing titanium materials, testing must be accomplished as soon as possible after fatigue cracking to eliminate any possible effects of crack blunting.

This abstract may be distributed without limitation.

TABLE OF CONTENTS

SECTION		PAGE
I	INTRODUCTION	1
II	BACKGROUND DATA	4
III	PROCEDURE	5
	Center Cracked Specimens	5
	Wedge Force Specimens	5
IV	RESULTS	10
V	DISCUSSION	12
	Reasons for Results	12
	Other Results from the Literature	13
	Observations and Considerations	15
VI	CONCLUSIONS	17
VII	REFERENCES	18

LIST OF TABLES

TABLE		PAGE
I	Tensile Test Results of Ti-5 Al-2.5 Sn (Transverse)	10
II	SCC Crack Initiation Results	10
III	Crack Arrest Data from Wedge Force Specimens	11

LIST OF FIGURES

FIGURE		PAGE
1	Center Cracked Specimen	6
2	Wedge Force Specimen	7
3	Wedge Force Specimen Test Set-up	9
4	Stress Intensity versus Crack Length for Specimens Shown in Figures 1 and 2	14

LIST OF SYMBOLS

a	=	crack length (inch)
B	=	thickness (inch)
H	=	half height of WF specimen (inch)
K	=	stress intensity factor (ksi $\sqrt{in}$)
K_{Ic}	=	critical plane strain stress intensity factor (ksi $\sqrt{in}$)
K_{iscc}	=	threshold stress corrosion cracking stress intensity factor for crack initiation (ksi $\sqrt{in}$)
K_{ascc}	=	threshold stress corrosion cracking stress intensity factor for crack arrest (ksi $\sqrt{in}$)
P	=	load (kip)
W	=	width for CC specimen or half width for WF specimen (inch)
Y	=	distance of loading hole from crack plane (inch)
Y. S.	=	Yield Strength (ksi)
μ	=	Poisson's ratio

SECTION I

INTRODUCTION

Over the past decade considerable research effort, both experimental and analytical, has been expended to develop techniques for evaluating a material's resistance to crack growth. This effort has been successful in defining the necessary test parameters for repetitively determining ambient (normal laboratory) environment plane strain fracture toughness numbers, K_{Ic}. With varying degrees of success, fracture toughness techniques have been applied when the sample material was subjected to other test conditions, e.g., corrosive environments, varying load spectrums, and thin section plane stress conditions.

These other types of tests have resulted in (1) the development of some still unaccepted formulas for crack growth (fatigue crack growth laws), and (2) much test data presented in the literature of questionable value (thin section results). However, research efforts attempting to define test requirements and test interpretation in these areas are continuing.

In the area of stress corrosion cracking (SCC) it has recently been demonstrated that the controlling strength parameter for defining SCC is that of stress intensity as defined by fracture mechanics (see Reference 1). In the past most SCC test results were developed in terms of gross or net stress. The emphasis on the fracture mechanics approach to SCC was prompted by a near calamity in the initial selection of materials for the supersonic transport (SST) airplane. Most of the candidate materials for the SST had been shown to be insensitive to corrosive attack by salt water. However, these results had been developed from tests on uncracked test samples. It was subsequently found that when a crack was introduced into a sample and the sample placed in a corrosive environment the load carrying capacity of the cracked panel was considerably reduced. This event naturally required that specimens be evaluated from a fracture mechanics point of view with results presented in terms of stress intensity factors instead of stress.

A recent demonstration showing that stress intensity factor and not gross or net stress is the controlling criterion for SCC crack growth was performed by Smith, Piper, and Downey on wedge force (WF) specimens (see Reference 1). In the WF specimen under constant applied load, as the crack grows the stress intensity factor (K) decreases while the net stress increases up to a crack length of approximately one half the width of the specimen. In the tests by Smith et al., the WF specimens were loaded to K levels above K_{iscc} threshold for crack initiation (as determined from center cracked (CC) specimen results), and a salt water solution placed around the crack. The cracks grew for some time and then arrested. The resulting K levels at arrest were

then compared with crack initiation data. The initiation data from the CC specimen and the arrest data from the WF specimen compared favorably with each other.

Another line of reasoning to demonstrate that K and not stress is the controlling variable goes as follows. As the crack grows the net section stress increases, the gross section stress remains the same, and K decreases. If the crack stops, then K must be the controlling variable since it is the only quantity that decreases.

An immediate extension of the good correlation in a corrosive environment between arrest K and initiation K (henceforth called K_{ascc} and K_{iscc} respectively) is to use the WF specimen for developing threshold initiation data. Much threshold SCC data has been generated by testing large numbers of fracture toughness specimens. Such results are usually plotted as K_{iscc} versus time to failure. Several specimens were required to define the threshold value below which crack initiation in a corrosive environment would not occur. Using a WF specimen, only one specimen would be required to define the threshold value of K for initiation if K_{iscc} and K_{ascc} are equal. However, indiscriminate application of this concept may lead to difficulty. If one considers that a crack is affected by only its immediate preceeding history, then a question is posed as to why a correlation should exist between initiation and arrest data. As a crack grows in a material, the region immediately ahead of the crack is quickly raised to a high stress/strain level. That is, the amount of material that feels the pronounced effect of the crack is only that material within a small region around the crack tip. By the same token the crack tip itself is only affected by a small amount of material immediately around it. Thus, a moving crack tip is only affected by the immediate past stress history.

In the case of a crack in a CC specimen the preceding history of the crack is one of lower K values while an arrest crack in a WF specimen has a history of higher K levels. It is then conceivable that an arrested crack may "blunt" before lowering to K_{iscc}. The word "blunt" infers the crack will no longer have the sharpness of a fatigue crack. It has been shown that the degree of sharpness of a fatigue crack is dependent on the magnitude of the stress used to move the crack (see Reference 2). High fatigue cracking loads produce less sharp or blunter crack tips. These blunter crack tips require higher stress intensities to move them. Many researchers in the area have used blunting of the crack tip to define many processes by which crack growth is inhibited.

The purpose of the investigation reported herein was to determine if blunting of a moving crack will cause the crack to arrest at a higher K level than the K level required for initiation. If indeed this does occur, one would expect to find this blunting in thin material under plane stress conditions. It would most likely occur under plane stress conditions since under such con-

ditions there is less constraint on the crack faces than under plane strain conditions. To investigate this possibility, CC and WF specimens of 0.028 inch thick Ti-5Al-2.5 Sn were fabricated and tested.

SECTION II

BACKGROUND DATA

In Reference 1, a good correlation was demonstrated between the stress intensity at crack initiation in a corrosive environment, K_{iscc}, and the stress intensity at crack arrest in a corrosive environment, K_{ascc}. These data resulted from tests performed on mill annealed Ti-8Al-1 Mo-1V. The material had a yield strength (Y. S.) of 145 ksi and was 0.16 inch thick. K_{ascc} was found to be 20 to 22 ksi $\sqrt{in}$ and K_{iscc} was found to be between 20 and 25 ksi $\sqrt{in}$.

For determining plane strain fracture toughness numbers, K_{Ic}, it has been determined that, to obtain valid test results, a specimen thickness greater than 2.5 $(K_{Ic}/Y.S.)^2$ is required (see Reference 2). Taking this criterion and applying it to the above SCC data by substituting K_{iscc} for K_{Ic}, one finds the thickness requirement for Ti-8Al-1Mo-1V to be 0.06 inch. Comparing this value to the 0.16 inch thickness of the tested material, one can conclude the specimen crack fronts in Reference 1 were sufficiently constrained so as to respond in a plane strain manner. Under these conditions one could expect to have good correlation between K_{iscc} and K_{ascc} since an increase in thickness greater than 2.5 $(K/Y.S.)^2$ does not change the response of the crack tip.

In order to determine if this correlation exists for all combinations of toughness, thickness and specimen configurations it would be desirable to test a much tougher type of material. The Ti-8Al-1Mo-1V tested by Smith et al., was high strength, low toughness, thick sectioned and highly SCC sensitive. The material selected for this program, Ti-5Al-2.5 Sn, has lower strength, higher toughness (approximately 60 ksi $\sqrt{in}$ versus approximately 35 ksi $\sqrt{in}$ for mill annealed Ti-8Al-1Mo-1V), a higher K_{iscc} value (29 versus 22 ksi $\sqrt{in}$) and was available in a thinner section (0.028 inch).

SECTION III

PROCEDURE

Two types of SCC specimens were tested, a three inch wide center cracked (CC) specimen and a six inch wide wedge force (WF) specimen (See Figures 1 and 2). Tensile tests were performed to obtain base line data for the material. All specimens were taken from the transverse direction of one sheet of Ti-5Al-2.5 Sn. The material was in the annealed condition, i.e., 1500°F/2 hr., air cooled.

Center Cracked Specimens

The CC specimens were fatigue cracked in tension-tension loading on a Schenck fatigue machine. The final maximum fatigue cracking load was always less than that used during the static SCC testing. The specimens were removed from the machine and a plastic cup was placed around their test section. The cup was sealed with a mixture of paraffin wax and rubber cement.

Testing was accomplished in a self leveling creep frame. A 3.5 percent NaCl solution was placed in the cup just prior to loading the specimen. Once the fatigue crack was immersed in the salt solution the load was manually applied to the specimen and a clock was started. The loading took less than half minute. In all cases, if the crack was going to grow, it started immediately. No cases were observed where the crack was stationary for a minute or more and then started to move. If the crack initiated and grew, it grew to failure. In those cases where the crack did not grow, the specimens were removed from the creep machine and refatigue cracked and tested again. Stress intensity factors were calculated using the equation from Reference 2,

$$K = P \quad a \quad [1.77 + 0.277(2a/W) - 0.51(2a/W)^2 + 2.7(2a/W)^3] / BW \qquad (1)$$

Wedge Force Specimens

The wedge force specimens were tested in generally the same manner as the CC specimens (See Figure 3). The same fatigue machine and creep frame were employed. The specimens were fatigue cracked, removed from the fatigue machine, surrounded by a plastic cup, sealed with wax, tested, and if no crack growth occurred, refatigued, etc. Stress intensity factors were calculated using the equation from Reference 3;

$$K = \frac{P}{2B} \left(\frac{a}{\pi}\right)^{1/2} \frac{(3 + \mu)y^2 + 2a^2}{(a^2 + y^2)^{3/2}} \quad \frac{G\left(\frac{a}{H}\right)}{F\left(\frac{a}{W}\right)} \qquad (2)$$

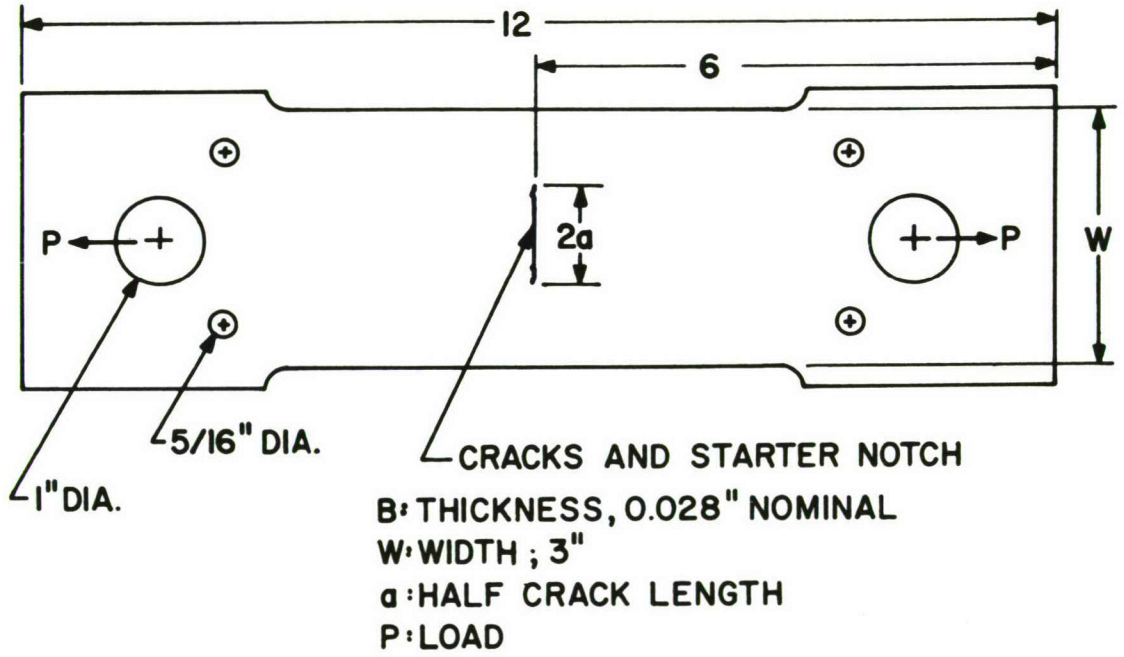

Figure 1. Center Cracked Specimen

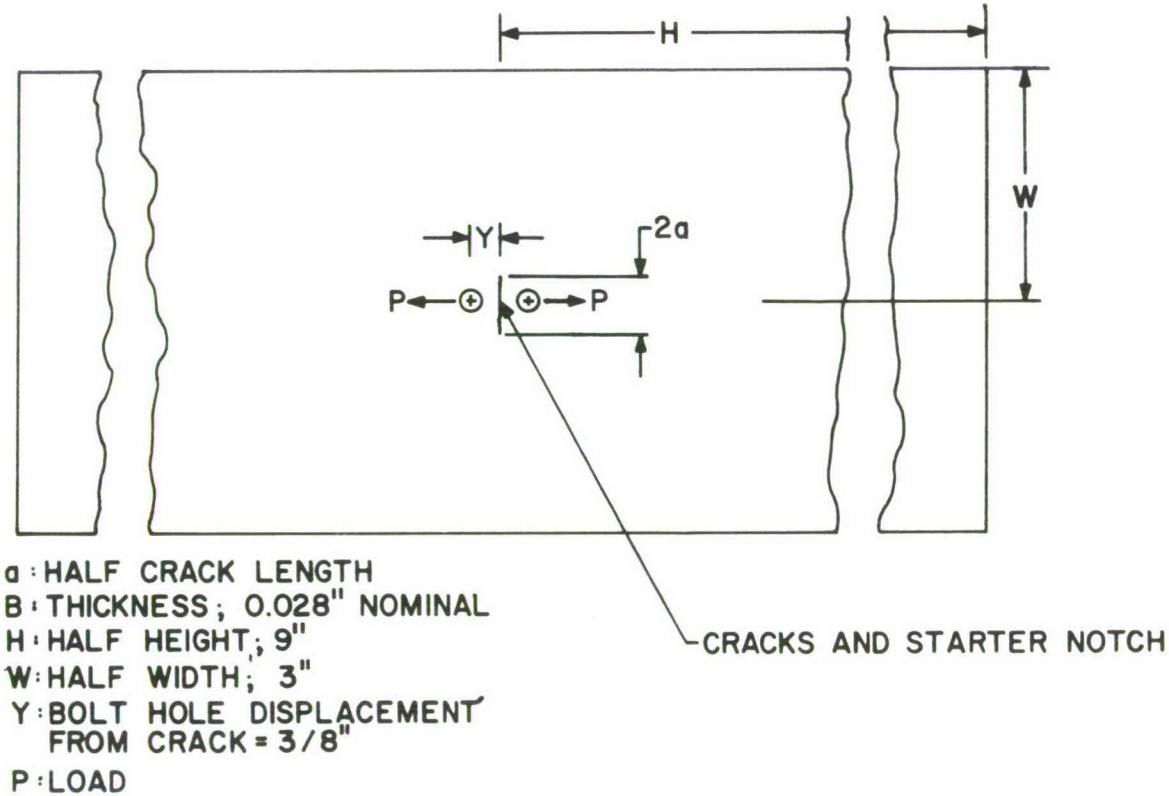

Figure 2. Wedge Force Specimen

where;

$$G\left(\frac{a}{H}\right) = 1 - 0.08\frac{a}{H} + 2.69\left(\frac{a}{H}\right)^2 - 0.91\left(\frac{a}{H}\right)^3$$

$$F\left(\frac{a}{W}\right) = \left[\frac{W}{\pi a}\sin\left(\frac{\pi a}{W}\right)\right]^{1/2} \tag{3}$$

a, H, B, Y, W - defined in Figure 2

P - load

μ - Poisson's ratio

The SCC results of Reference 1 were developed by using equation (2) but without the finite height correction, $G\left(\frac{a}{H}\right)$. However, for the specimens tested in Reference 1 this correction would be a maximum of about 5 percent for a crack length of half the sample width and less for shorter cracks. Since, for cracks larger than half the width, K is increasing with a, the correction of the WF results in Reference 1 would always be less than five percent.

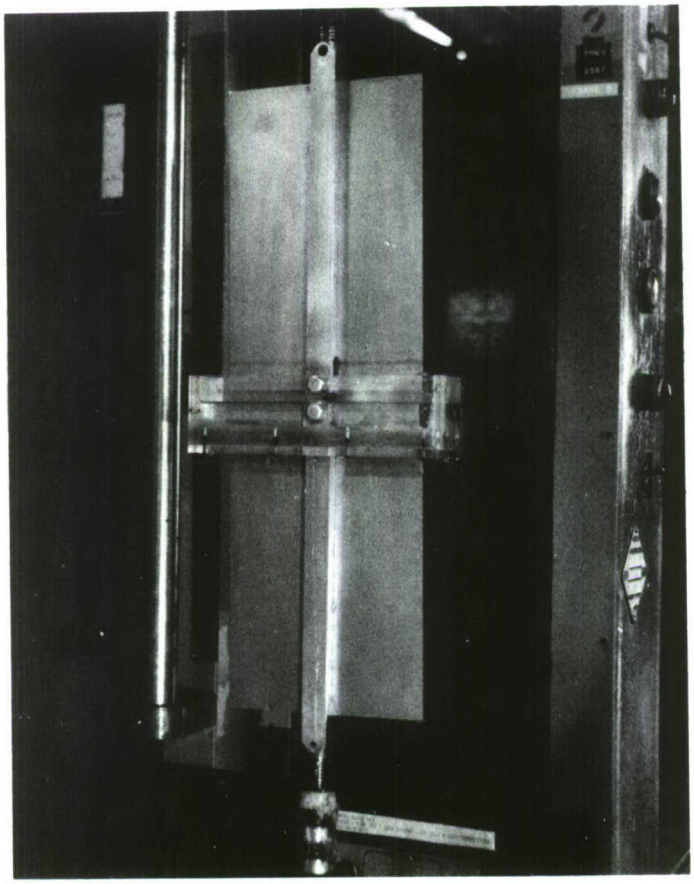

Figure 3. Wedge Force Specimen Test Set-Up

SECTION IV

RESULTS

The results of the tensile tests are presented in Table I. These results are for specimens taken transverse to the rolling direction of the sheet. All data presented in this report are for specimens oriented in this direction.

TABLE I

Tensile Test Results of Ti-5Al-2.5 Sn (Transverse)

Ultimate Strength (ksi)	Yield Strength (ksi)	Elongation (% in 2 in.)
141.6	130.4	15.3
144.6	134.4	14.6
142.9	132.8	15.5

The results of the SCC crack initiation tests from the CC specimens are presented in Table II. These data indicate a K_{iscc} value of 28.5 ksi $\sqrt{in}$. This value compares with the value of 29.5 ksi $\sqrt{in}$ presented in Reference 4.

TABLE II

SCC Crack Initiation Results

Initial Applied K (ksi $\sqrt{in}$)	Time To Failure (min)
49.2	2.5
31.2	4.3
30.2	3.7
29.1	No failure in 3 hrs.
28.8	4.3
28.5	5.0
25.3	No failure in 24 hrs.

The results of the SCC crack arrest tests performed on the WF specimens are presented in Table III. These results do not represent all the testing performed. Some data points were eliminated because the crack front history could not be observed on the fracture face of the specimen after the specimen had been failed. The table presents the results of each crack front as a separate

data point. In some cases the history of only one crack front is presented from a given test. Also, in some cases, the two half crack lengths were not of equal length. However, this should not affect the results since the cracks were of considerable length and the load was applied in the center of the two half crack lengths. In order for the length of one crack front to affect the other, the change of crack opening displacement from one front would have to impose a constraint on the other half crack. Considering the lengths of the cracks and the location of the load point, this effect is negligible.

TABLE III

Crack Arrest Data from Wedge Force Specimens

Spec. No.	Half Crack Length Initial (in.)	K Initial (ksi $\sqrt{in}$)	K Lowest (ksi $\sqrt{in}$)	K Final (ksi $\sqrt{in}$)	Crack Growth (in.)	Data Point
6	0.90	30.2		30.2	None	1
	1.52	33.0		33.0	0.02	2
	1.72	33.7		33.7	None	3
	1.78	30.5			To failure	4
3	0.45	a	47.0		To failure	5
4	0.48	a	42.0		To failure	6
7	0.72	28.6		28.6	None	7
	0.80	35.0		35.0	None[b]	8
	0.90	35.0		34.4	0.57	9
	0.90	35.0	34.2		To failure	10
2	0.77	28.8		28.8	0.05	11
	0.80	29.6		29.6	0.03	12
	1.40	32.2		32.2	0.02	13
8	0.80	34.5		34.5	None	14
	0.73	34.8		34.1	0.21	15
	1.00	34.5		34.5	None	16
	1.05	34.5		34.3	0.05	17
	1.05	36.2		36.2	None[b]	18
	1.20	35.9		35.9	None[b]	19
	1.12	36.0	35.6		To Failure	20
	1.30	35.7	35.6		To Failure	21
1	0.70	35.8		34.3	0.42	22
	0.70	35.8		34.0	0.65	23

a Crack too short at initiation

b Specimen sat overnight or longer before testing

SECTION V

DISCUSSION

The results in Table II indicate that the threshold stress intensity above which crack growth will initiate in a 3.5 percent NaCl solution is around 28.5 ksi $\sqrt{in}$. As previously stated, this value agrees well with other reported data. Both the initiation data developed for this report and the data from Reference 4 were developed using the center cracked specimens. As will be shown later, the results of initiation tests may be affected by the slope of the K versus crack length (a) curve of the specimen employed.

From the crack arrest results presented in Table III, a threshold value of 34.5 ksi$\sqrt{in}$ is obtained for K_{ascc}. See data points 9, 15, 22, and 23. Above this value crack arrest will not occur if proper test procedures are followed. Any cracks that initiate below 34.5 ksi $\sqrt{in}$ are quickly arrested if their lengths are less than 1.5 inches. Above 1.5 inches the slope of this K versus (a) curve rises sharply (see Figure 4). The difference between the crack arrest threshold and the crack initiation threshold is about 20 percent. The possible reasons for this difference must now be explored.

Reasons for Results

The first possible reason for the observed results is that the stress intensity factor equation for the WF specimen is inaccurate. However, the crack arrest data helps disprove the possibility. In the range between 28.5 and 34.5 ksi$\sqrt{in}$, for cracks less than 1.5 inches in length, there is a small amount of crack growth (see data points 11, 12, and 13). The small crack growth at the lower K levels gives tacit confirmation to the correctness of the equation for the WF specimen. Since crack initiation tests on the CC specimens generally produced crack growth above 28.5 ksi $\sqrt{in}$, and for values of K in this neighborhood using the WF specimen there was a small amount of crack growth, one can conclude that K was above or around 28.5 ksi $\sqrt{in}$. Also, considering the good correlation demonstrated for K_{ascc} and K_{iscc} results by Smith, et al. using the CC and WF specimens on mill annealed Ti-8-1-1, one must conclude the equation for the WF specimen is correct.

Another possible reason for a difference between K_{iscc} and K_{ascc} will now be considered. In both the WF specimen and the CC specimen the immediate previous history of a moving SCC crack is one of SCC propagation. Therefore if the arrested crack is stopped by blunting of the crack front, the same thing should happen for the initiated crack front, i.e., it should blunt immediately upon moving away from the fatigue crack and then not move again until K exceeds K_{ascc}. There are, however, other effects that must be considered. The degree of blunting is proportional to the applied K level. Conversely, the K level required to overcome a given degree of blunting is propor-

tional to the degree of blunting. Also, blunting of a moving crack is time dependent if the material in which the crack is embedded is strain rate sensitive; that is, the material at the tip of such a crack is being quickly raised to a high strain level as the ligament fractures. Strain rate sensitive materials will initially respond elastically. The constraint caused by the elastic response will tend to hold the crack faces closed and suppress blunting. Therefore, the degree of blunting is depending on the applied K and the time-history of the crack.

Referring to Figure 4, one can see that the slope of the K versus crack length curve is very steep for the CC specimen. With the CC specimen the crack initiates from a sharp fatigue crack and starts to grow. After initiation the tendency is for the crack to blunt to the degree dictated by the applied K-time history and stop. By this time, however, the crack is at a much higher K level because the crack length has changed. This higher K combined with the SCC effects is able to overcome the blunting caused by the lower K-time history and drive the crack forward. Because of the steep rise of the K versus crack length curve (combined with the SCC effects) the crack growth is sustained. However, in the WF specimen for a considerable period of crack growth the slope of the K versus crack length curve is of opposite sign or is less steep than that for the CC specimen. In this specimen the same three processes are operative, i.e., the crack driving force of K, the crack driving force of SCC, and crack arresting force of the blunting. Since in the WF specimen the history of the crack front has usually been at a higher K level, and the blunting must be overcome by the same two forces (K and SCC), one can see why K_{ascc} is now higher than K_{iscc}. Blunting is proportional to the applied K-time history; the previous applied K is always higher than the present K; the effects of SCC are of the same magnitude; therefore the crack stops at a higher K level.

Other Results from the Literature

One now asks why this effect was not observed in the tests by Smith, et al. It may have been that in those tests the crack front was under a plane strain condition since B was greater than $2.5\ (K_{iscc}/Y.S.)^2$ and blunting was suppressed by the triaxial state of stress across the major part of the crack front.

Data presented in the literature since the start of this investigation tend to confirm the findings in this report. In Reference 6, SCC tests on single edge notched (SEN) tension specimens of 0.01 inch thick Ti-6Al-4V are reported. K_{iscc} was found to be 20 ksi$\sqrt{\text{in}}$. Even though the specimens had a continuously rising K versus crack length curve and the specimens were tested under constant load conditions, these thin specimens experienced crack arrest at K levels well above K_{iscc} (arrest occurred from 36 to 68 ksi$\sqrt{\text{in}}$). It was proposed that arrest occurred because SCC insensitive beta grains and misoriented alpha grains (SCC occurs on one plane in the alpha grains) occupied a critical percentage of the crack front.

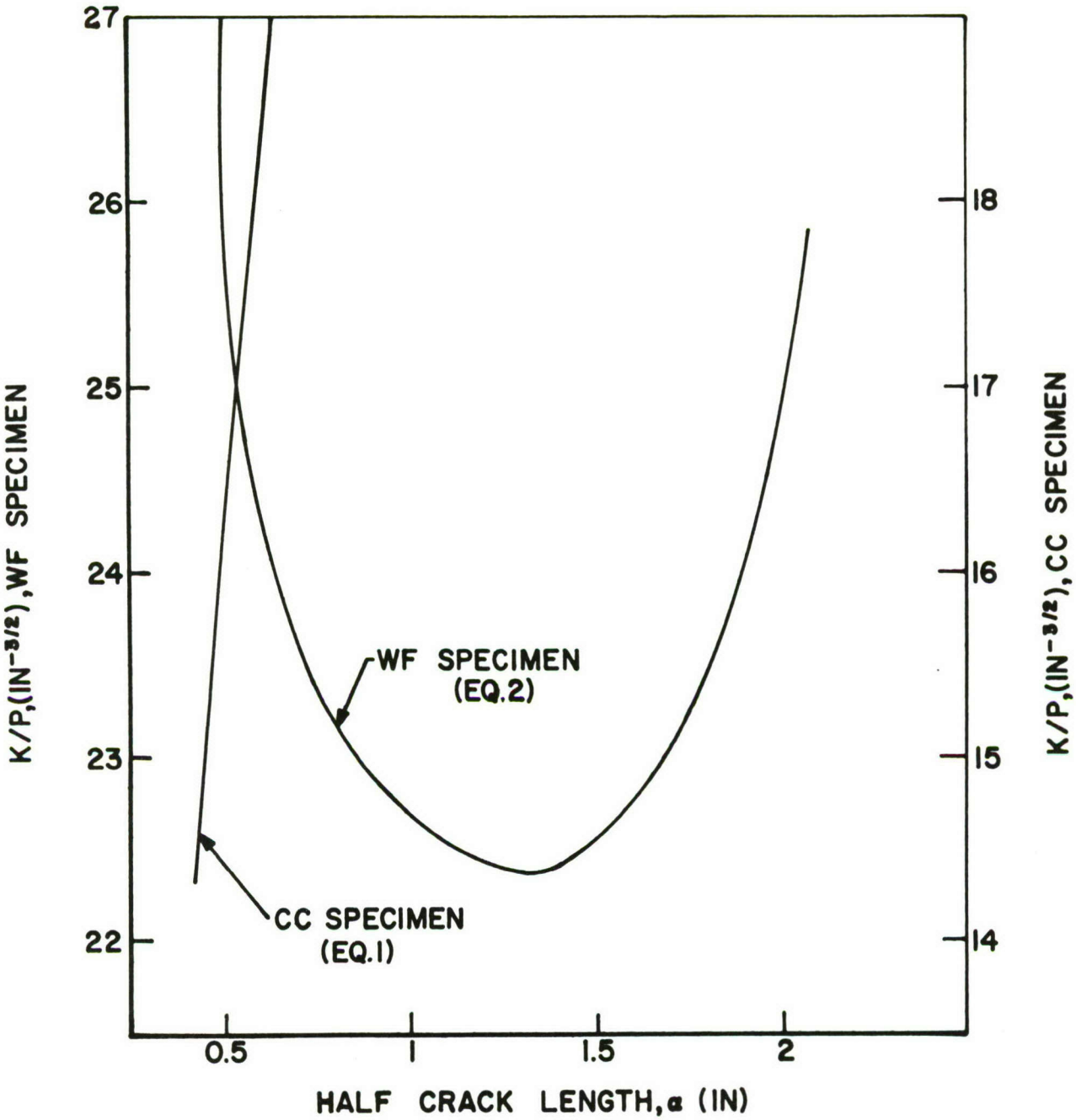

Figure 4. Stress Intensity Versus Crack Length for Specimens Shown in Figures 1 and 2.

However, if the results of Reference 6 are interpreted in terms of the three forces acting on a moving crack, more confirmation of the explanation previously presented for an arrested crack is obtained. The higher the initial applied K level, the shorter the crack growth before the K-time history causes crack blunting. Crack arrest was possible because of the extreme thinness of the specimens.

Observations and Considerations

An inspection of the data in Table III reveals a number of data points which do not seem to fit the above explanation (See data points 8, 18 and 19). In these tests even though K was above K_{ascc} no crack growth occurred. However, if consideration is given to footnote b, an understanding of this apparent ambiguity is obtained. When sufficient time elapsed between fatigue cracking and SCC testing, for example, overnight, the crack front blunted. This was probably caused by a number of factors including moisture in the air and wedging open of the crack by the plastic zone at the crack tip allowing moisture to enter. This effect of crack front properties varying with time has previously been noted and is pointed out in Reference 5.

Now, considering the results presented herein and those from Reference 1, the question of how thick a specimen is required to obtain correlation between K_{iscc} and K_{ascc} should be approached. As previously stated, experimental data has shown the minimum thickness requirement for obtaining valid K_{Ic} numbers is 2.5 $(K_{Ic}/Y.S.)^2$. When this thickness criterion is met, all K_{Ic} numbers generated from specimens this thick or thicker have the same value. In the valid thickness range an increasing amount of constraint does not change the response characteristics of the material at the crack tip. It may then be speculated that this same thickness criterion may be imposed to ensure that K_{iscc} and K_{ascc} are the same. However, this speculation will have to be proven through experimental investigation similar to that reported in Reference 2.

A number of comments on the advantages and limitations of the WF specimen are in order. For those specimens for which it can be shown that K_{iscc} and K_{ascc} are equal, the main advantage of the WF specimen comes from reducing the number of specimens and consequently the time required to develop threshold K_{iscc} data. This of course will require further investigation to determine the testing criterion needed to insure a one-to-one correspondence between K_{iscc} and K_{ascc}.

On the negative side of the ledger, the material size requirement and usable K range of the specimen are of significance. The WF specimen used in this investigation required three times the material required for a CC specimen but fewer specimens may be required. Also, the failed halves of the WF specimens are ideal for fabricating other smaller specimens.

Also, considering the large size of the specimens tested in this investigation (6 inch x 18 inch) a decreasing K range was obtainable for only approximately 0.7 inch of crack growth (See Figure 4). This corresponds to a change in K of 1.2P ksi $\sqrt{\text{in}}$ where P is in kips. For the purpose of these tests a load of approximately 1.5 kip was employed. This gave a usable K range of less than 2 ksi $\sqrt{\text{in}}$. The usable range of the crack length is limited by the interaction of the bolt hole with the stress field. Since a bolt does not provide a perfect point loading condition as is assumed in the derivation of Equation 2, a distortion of the stress field occurs for some distance from the bolt. Both References 1 and 3 refer to this problem. For the specimen in Figure 2, this interaction existed for a half crack length of up to approximately 0.7 inch.

SECTION VI

CONCLUSIONS

1) A good correlation between K_{ascc} and K_{iscc} will exist only for thick section testing. A tentative criterion of $B \geq 2.5\ (K_{iscc}/Y.S.)^2$ is probably a valid lower limit for a thickness limitation.

2) For valid SCC testing of fatigue cracked titanium specimens it is imperative that testing be accomplished as soon as possible after fatigue cracking is completed. This must be done to insure that blunting of the crack tip does not occur from exposure to laboratory air. This conclusion has important practical implications and should be pursued.

SECTION VII
REFERENCES

1. Smith, H. R., Piper, D. E., and Downey, F. K., "A Study of Stress-Corrosion Cracking by Wedge-Force Loading," Engineering Fracture Mechanics, Volume 1, Number 1, June 1968.

2. ASTM STP 410, Plane Strain Crack Toughness of High Strength Metallic Materials, December 1967.

3. Figge, I. E., and Newman, J. C., "Prediction of Fatigue-Crack Propagation Behavior in Panels with Simulated Rivet Forces," NASA-TN D-4702, National Aeronautics and Space Administration, August 1968.

4. Letter from E. F. Erbin, Titanium Metals Corporation of America to C. L. Harmsworth, Air Force Materials Laboratory.

5. Petrak, G. J., "Investigation of the Subcritical Crack Growth Life of Titanium in a Corrosive Environment," AFML-TR-68-271, Air Force Materials Laboratory, Wright-Patterson Air Force Base, Ohio, October 1968.

6. "ARPA Coupling Program on Stress-Corrosion Cracking," Eleventh Quarterly Report, July 1969.

UNCLASSIFIED

Security Classification

DOCUMENT CONTROL DATA - R & D

(Security classification of title, body of abstract and indexing annotation must be entered when the overall report is classified)

1. ORIGINATING ACTIVITY *(Corporate author)* University of Dayton Research Institute Dayton, Ohio 45409	2a. REPORT SECURITY CLASSIFICATION UNCLASSIFIED 2b. GROUP

3. REPORT TITLE

An Investigation of the Stress Corrosion Crack Arrest and Crack Propagation Properties of a Titantium Alloy

4. DESCRIPTIVE NOTES *(Type of report and inclusive dates)*

Final Report, May 1969 to January 1970

5. AUTHOR(S) *(First name, middle initial, last name)*

Gerald J. Petrak

6. REPORT DATE May 1970	7a. TOTAL NO. OF PAGES 18	7b. NO. OF REFS 6
8a. CONTRACT OR GRANT NO. F33615-69-C-1471 b. PROJECT NO. 7381 c. Task No. 738106 d.	9a. ORIGINATOR'S REPORT NUMBER(S) UDRI-TR-70-26 9b. OTHER REPORT NO(S) *(Any other numbers that may be assigned this report)* AFML-TR-70-244	

10. DISTRIBUTION STATEMENT

This document has been approved for public release and sale; its distribution is unlimited.

11. SUPPLEMENTARY NOTES	12. SPONSORING MILITARY ACTIVITY Air Force Materials Laboratory Wright-Patterson Air Force Base, Ohio

13. ABSTRACT

It has been demonstrated in Reference 1 that the controlling crack growth criterion in stress corrosion cracking is that derived from fracture mechanics concepts and not a criterion based on gross or net stress. This demonstration was accomplished by testing two types of cracked specimens and showing that crack arrest and crack initiation stress intensities are the same while gross and net stresses are different. However, these tests were performed on thick section material. The work reported herein was intended to check the validity of the correlation between arrest and initiation stress intensities using thin section material having higher thoughness and lower yield strength than the material previously tested. The results showed crack arrest stress intensities were substantially higher than those for crack initiation when testing thin materials. It was also observed from the test results that when testing titanium materials testing must be accomplished as soon as possible after fatigue cracking to eliminate any possible effects of crack blunting.
This abstract may be distributed without limitation.

DD FORM 1 NOV 65 1473

UNCLASSIFIED

Security Classification

14. KEY WORDS	LINK A ROLE	LINK A WT	LINK B ROLE	LINK B WT	LINK C ROLE	LINK C WT
Stress Corrosion						
Titanium						
Crack Arrest						
Crack Initiation						