28 December 1966

U. S. ARMY TEST AND EVALUATION COMMAND
COMMON ENGINEERING TEST PROCEDURE

PHOTOGRAPHIC INSTRUMENTATION FOR TRAJECTORY DATA

1. OBJECTIVE

The objective of this test procedure is to provide personnel with a basic knowledge of, and the necessary guidance for, employing photographic instrumentation in trajectory data gathering.

2. BACKGROUND

Data are often required to describe the flight characteristics of rockets, missiles, gun boosted rockets, and experimental projectiles over part or all of their trajectories. This information can be obtained with the use of either, or both, of two basic classes of range instrumentation, First, there are the electronic trajectory measurement systems, and secondly, the optical (photographic) range instruments. Photography, however, offers a memory of vast capacity, uniformity, fineness of detail, permanence, reliability, and accuracy with which not only the electronic systems but also man cannot compete. In fact, the rigorous nature of photogrammetry and the simplicity and inherent precision of optical instruments allow this form of instrumentation to be used as the standard against which the performance of other measuring systems can be evaluated; this requires the strictest of performance standards.

Photographic instrumentation is a complex subject combining the techniques of mathematics, photography, surveying, electronics, and mechanics. The limitations on visual data to be recorded optically are regulated by the photographic instruments available. Constant improvements and adaptations to particular test work, in the form of new equipment and modifications to existing ones, have produced numerous varieties. Some of the more common representative types are discussed in Appendix A.

Appendices B and C discuss photographic coverage planning and instrument field location considerations. The most important support equipment, the timing system, is discussed in Appendix D. Visibility factors and refraction errors are covered in Appendicies E and F, respectively.

3. REQUIRED EQUIPMENT

a. Applicable Photographic Instrumentation.
b. Special Camera Mounts, as Required.
c. Calibration Targets.
d. Survey Equipment including Special Telescopes and Clinometers.
e. Fixed Focal-length Lenses, as Required.
f. Light Filters, as Required.
g. Supplementary Lighting (flash lamps, etc.), as required.

*Supersedes Interim Pamphlet 80-70 and 80-80

AD 719673
20020805024

h. Timing System Equipment, as specified by the Inter-Range Instrumentation Group.

i. Film in applicable sizes.

4. REFERENCES

A. Berger, W. J., A Least Squares Method for the Reduction of Fixed Camera Records, AFMTC-TN-55-34, Tech Rept. No. 16, July 1955.

B. Brown, D. C., A Treatment of Analytical Photogrammetry with Emphasis on Ballistic Camera Applications, ASTIA No. 124144, August 1957.

C. Sokol, J., Photometric Analysis of Typical Optical Instrumentation Film Records, BRL Tech. Note No. 1-2, August 1949.

D. Rosenfield, George H., Fixed Camera Data Reduction Analysis Procedures, RCA Data Reduction Tech. Rept. No. 41, AFMTC-TR-58-2, February 1958.

E. Berger, W. J., Orientation of Fixed Camera to Cover Maximum Length of Straight Line Trajectory, RCA Data Reduction Tech. Rept. No. 23, AFMTC-TN-55-42, August 1955.

F. Berger, W. J., Orientation of Fixed Camera for Maximum Coverage of Space Trajectory, RCA Data Reduction Tech. Rept. No. 24, AFMTC-TN-55-50, September 1955.

G. NAVORD Rept. No. 1967, A Method for the Reduction of Trajectory Data from CZR-1 & RC-2 Bowen Ribbon Frame Cameras, US Naval Ordnance Test Station.

H. FMTC Instructions, CRZ-1 (Bowen) Ribbon Frame Camera System, (AFMTC Modified).

I. Evaluation of the CRZ-1 Fixed Camera System, Quality Control Tech. Rept. Note No. 13-B, AFMTC-TN-56-27, April 1956.

J. MTP 3-2-825, Location of Points of Impact or Burst.

K. MTP 4-2-807, Fuze Functioning Time - Superquick Fuzes.

L. MTP 4-2-811, Rate of Spin Measurements for Projectiles.

M. MTP 4-2-821, The Doppler Velocimeter.

N. MTP 5-1-031, Cinetheodolites.

5. SCOPE

5.1 SUMMARY

This test procedure presents the steps necessary for preparing for and conducting trajectory studies using photographic instrumentation for the purpose of obtaining data on space position, velocity, acceleration, yaw, pitch, roll and launch performance.

5.2 LIMITATIONS

The trajectory data to be collected and the procedures presented in this test procedure are specifically limited to that portion associated with the use of photographic instrumentation. In particular, this MTP does not cover photographic determination of rate of spin measurements for projectiles, fuze functioning time - superquick fuzes, or locations of points of impact or burst, which are found in MTP's 4-2-811, 4-2-807, and 3-2-825.

6. PROCEDURES

6.1 PREPARATION FOR TEST

6.1.1 Initial Planning

a. Describe test target (projectile, missile, etc.) including physical measurements.

b. Evaluate and record values for all parameters associated with the target's expected trajectory.

NOTE: Two estimation methods are mentioned in Section 1 of Appendix B.

c. Determine the trajectory data to be acquired within the portion(s) of the trajectory being studied as discussed in Section 2 of Appendix B.

NOTE: The data mentioned in Appendix B is only that which is usually obtained in any trajectory study. Specific data for any particular test should also be considered.

6.1.2 Photographic Instrumentation

a. Select the number and types of photographic instrumentation required for the test by use of an elimination type scheme which first considers the information in Appendix B, paragraph 3, and secondly, the particular characteristics associated with each instrument (Appendix A) in conjunction with the data requirements in paragraph 6.1.1.c.

b. Give a full description of any photographic instruments used which do not conform to those described in this MTP.

6.1.3 Instrument Location and Installation

a. Determine the optimum field location sites for each particular photographic instrument by considering the applicable portions of Appendices A, B, C, and E and install them.

b. Install reference target boards for each instrument at various field locations such that the instruments optical axis may be aligned with the reference target by simply changing the instruments elevation angle.

c. Install centralized timing system as discussed in Appendix D.

6.1.4 Photographic Instrumentation Calibration

NOTE:
1. This Materiel Test Procedure assumes that the instruments in use have already been subjected to an accurate laboratory calibration test.
2. The calibration procedures required in this test are to be performed just prior to target firing.

a. Using the optical alignment equipment supplied with each particular instrument, align the instruments optical axis with the reference target

boards installed in step 6.1.3.b.

b. Expose several frames of film for each instrument and determine the linear displacement of the target board image from the center of the developed frame(s) of film.

c. Perform a stellar calibration on the ballistic plate cameras, if used, by exposing the plate in such a manner as to obtain a stellar image.

d. Align the photographic instruments in azimuth and elevation directions such that their fields of view cover the applicable portions of the expected trajectory.

6.2 TEST CONDUCT

NOTE: Tests which utilize photographic instrumentation can only be conducted during periods of allowable visibility. These visibility conditions are discussed in Appendix E.

a. Fire the target while operating the photographic instrumentation in the applicable manner.

b. Record complete and comprehensive field notes as follows:

1) For mission:

a) Mission number
b) Type mission
c) Remarks (pertinent to mission)
d) Date
e) Time of each mission

2) For each station:

a) Station number or location
b) Number of operators
c) Visibility
d) Sky conditions (background)
e) Meter deflection readings
f) "f" opening
g) Filter type (if applicable)
h) Number of frames/second
i) Type film and film speed number
j) Remarks (camera performance)

6.3 TEST DATA

6.3.1 Preparation for Test

6.3.1.1 Initial Planning

Record the following:

a. For test target:

1) Type (missile, projectile, or other)
2) Length, in feet or inches
3) Width, in feet or inches
4) Height, in feet or inches

b. For estimated trajectory parameters:

1) Firing elevation, in mils or degrees
2) Range distance, in feet or miles
3) Total time of flight, in seconds or minutes
) Burnout time, in seconds or minutes, if applicable
5) Burnout distance, in feet or miles, if applicable
6) Range distance versus time of flight
7) Acceleration values versus time of flight
8) Velocity values versus time of flight
9) Altitude distance versus time of flight
10) Yaw period, in seconds

c. For data requirements:

1) Portion of trajectory (launch, pre-or post-burnout, impact)
2) Whether or not the following data will be obtained:

a) Tipoff angle or firing elevation
b) Launcher reactions
c) Azimuth deviations
d) Yaw
e) Pitch
f) Roll
g) Space position
h) Velocity
i) Acceleration
j) Other specific data

6.3.1.2 Photographic Instrumentation Selection

Record the following for each type of instrument:

a. Type of instrument
b. Identification number
c. Any non-standard characteristics, if applicable
d. Timing code requirements (IRIG code)

6.3.1.3 Instrument Location and Installation

Record the following:

a. For each instrument location site:

1) Station number
2) Type of camera

3) Camera identification number
4) Field location with respect to grid coordinate system
5) Azimuth alignment in arc sec
6) Elevation alignment in arc sec

b. For each reference target site:

1) Corresponding camera station number
2) Field location with respect to grid coordinate system

c. Description of timing system

6.3.1.4 Photographic Instrumentation Calibration

a. Retain film from each camera with photograph of reference board.
b. Record image displacement for:

1) Elevation in arc sec
2) Azimuth in arc sec

c. Retain ballistic plate camera photographs of stellar field for each camera.

6.3.2 Test Conduct

a. Retain all photographic film from each instrument location
b. Record field notes, such as follows:

1) For mission:

a) Mission number
b) Type mission
c) Remarks (pertinent to mission)
d) Date
e) Time of each mission

2) For each station:

a) Station number or location
b) Number of operators
c) Visibility
d) Sky conditions (background)
e) Meter deflection readings
f) f/number
g) Filter type, if applicable
h) Number of frames/second
i) Type film and film speed number
j) Remarks (camera performance)

6.4 DATA REDUCTION AND PRESENTATION

Surveyed values for calibration target angles, coordinates of camera bench marks, and camera mount constants should be transmitted to the data analysis organization for preliminary computations. The film records, clearly marked and identified, should be available for data analysis as soon as possible following each day's firing.

Film records are measured on precision comparators, and the linear displacement of the images from the apparent optic axis is established. The displacements are converted to angular values and the direction of the line of sight of the missile from each camera is obtained. Refraction errors discussed in Appendix F must be considered. These basic data are used to compute space positions as a function of time, from which both velocity and acceleration of the center of gravity of the rocket or missile mass are determined. The actual direction of the missile longitudinal axis may be determined if the images are large enough.

Final data computation may be handled in several ways. The basic data obtained from the films are usually fitted by a moving-arc procedure to obtain the smoothest values as well as to obtain velocity and acceleration data.

GLOSSARY

1. Cine Operated: Camera operation in which the film is advanced in a continuous manner with a specific constant delay between the repetitious frames until the motor is stopped or the film supply is exhausted.

2. Pulse Operated: Camera operation in which a solenoid has been substituted for the motor in the film-transport mechanism, permitting pulse operation of the film advance which allows discontinuously varying delays between frames, and also driven by synchro motors and operated by solenoid controlled clutch which has positive stop allowing only one frame to be exposed. The solenoid may be operated at random or by controlled frequency pulses.

3. Theodolite: A precise optical survey device including mount that measures the azimuth and elevation angles of a target with respect to a known set of coordinates.

4. Cinetheodolite: This normally refers to a theodolite to which a camera which is cine operated has been attached to record target azimuth and elevation, and time of exposure. The camera can also be pulse operated. The instrument is characterized by having the ability to track the target.

5. Phototheodolite: This refers to a theodolite to which a camera which is pulse operated has been attached for recording purposes. The instrument is characterized by being a fixed (non-tracking) position instrument.

6. Photogrammetry: The utilization of photographic devices to gather precise quantitative test data.

7. Camera: The word camera refers either to the chamber in which the exposure of photographic materials (film, etc.) takes place or to a complete assembly, including the film transport mechanism, the lens system, the aperture control, shutter, film marking device, and all other such accessories needed.

8. Focal Length: The axial distance between the lens and the focal point of the lens. It settles the scale of reproduction.

9. Focal Point: The point where the rays of light bent by the lens meet in their most compact form when the entering rays are a parallel bundle to the lens axis.

10. Film Emulsion: This refers to the chemical emulsion on one side of the film which is sensitive to light and thus allows photographic record.

11. Grid Coordinate System: The grid coordinate system is an invisible orthogonal reference coordinate system contained in the plane tangent to the earths surface (normally the sea level surface) and containing at least two points (one usually the grid origin) which one referenced directly to two fixed position land monuments.

12. Ocular: The eyepiece of an optical instrument.

13. Aperture: The physical opening which limits the size of the bunched group of rays transversing the optical system and finally reaching the film.

14. Fiducial Markers: Index markers fixed to the camera aperture which defines the frame format at the film plane or system or projected light rays which is internally housed in the camera. They are imaged on the photograph emulsion and used as recoverable reference points from which film measurements can be made.

15. Target: As used in this MTP, the notation target refers to the object (missile, projectile, airplane, etc.) transversing the trajectory.

16. Launcher: As used in this MTP, the notation launcher refers to object (launch platform, gun, etc.) used to start or set the target into motion.

17. f/number: The ratio of the focal length of the lens to its diameter. This can be changed in accordance with the requirements of the occasion by changing the diameter of a hole in an opague diaphragm or stop.

APPENDIX A

PHOTOGRAPHIC INSTRUMENTATION CHARACTERISTICS

This appendix discusses some of the more commonly used standard and non-standard (specialized) photographic instruments.

1. Smear or Streak Cameras

Both of these nomenclatures apply to one particular class of instruments: the names result from the fact that the target's image on the film is produced in a smear or streak fashion. The nomenclature, slit, is also used to denote this class of cameras, as the camera actually utilizes a slit shaped aperture. An example of a smear camera is shown in Figure A-1.

The smear camera used in ordnance test activities is a modified, high speed camera with continuous film travel transport. The camera ordinarily uses a rotating prism as a shutter. For this application, the shutter prism is removed, the lens repositioned, and a slit approximately 0.030 inch wide is installed between the objective lens and the film and perpendicular to the direction of film travel (Figure A-2). The slit serves two functions. It establishes the space position of the area to be photographed, and, by limiting the field of view, the image quality is improved. The film transport speed is adjusted so that the film moves at the same rate and direction as the image of the target. This combination of slit and speed provides a means of essentially taking a still photograph of the target on moving film while a timing system provides time markers on the film. The instrumental velocity of the target is then the length of the target expressed in feet divided by the length of the target image measured in seconds on the film.

Most of these cameras utilize 35-millimeter film in a film magazine size which allows a maximum operating time of up to 15 seconds.

Several focal length lenses are available for use depending upon the distance between the camera and target and the target velocity. The lens selected affects the angular fields of view as does the slit aperture size.

Accuracy of the single camera photographic method is dependent on the length of the target and its velocity. The shorter the target and the higher its velocity, the greater the error. The multiple camera application is used primarily when the errors in the single camera system are excessive. In this case, two or more smear cameras are used to provide a longer base line distance than the target length. The timing system of the cameras must be coded to provide a means of identifying common time markers on the several film strips, then the computations remain essentially the same: (The distance between the projections of the slits on the trajectory is divided by the time required for the target to advance from one slit projection to the next as read from the films). Physical distance between the camera slit and its time light must be determined for each camera to allow time correction factors. Figures A-3 and A-4 depict two of the most common field locations used when employing multiple smear cameras. In either case, two adjustments must be made to the instrument when various

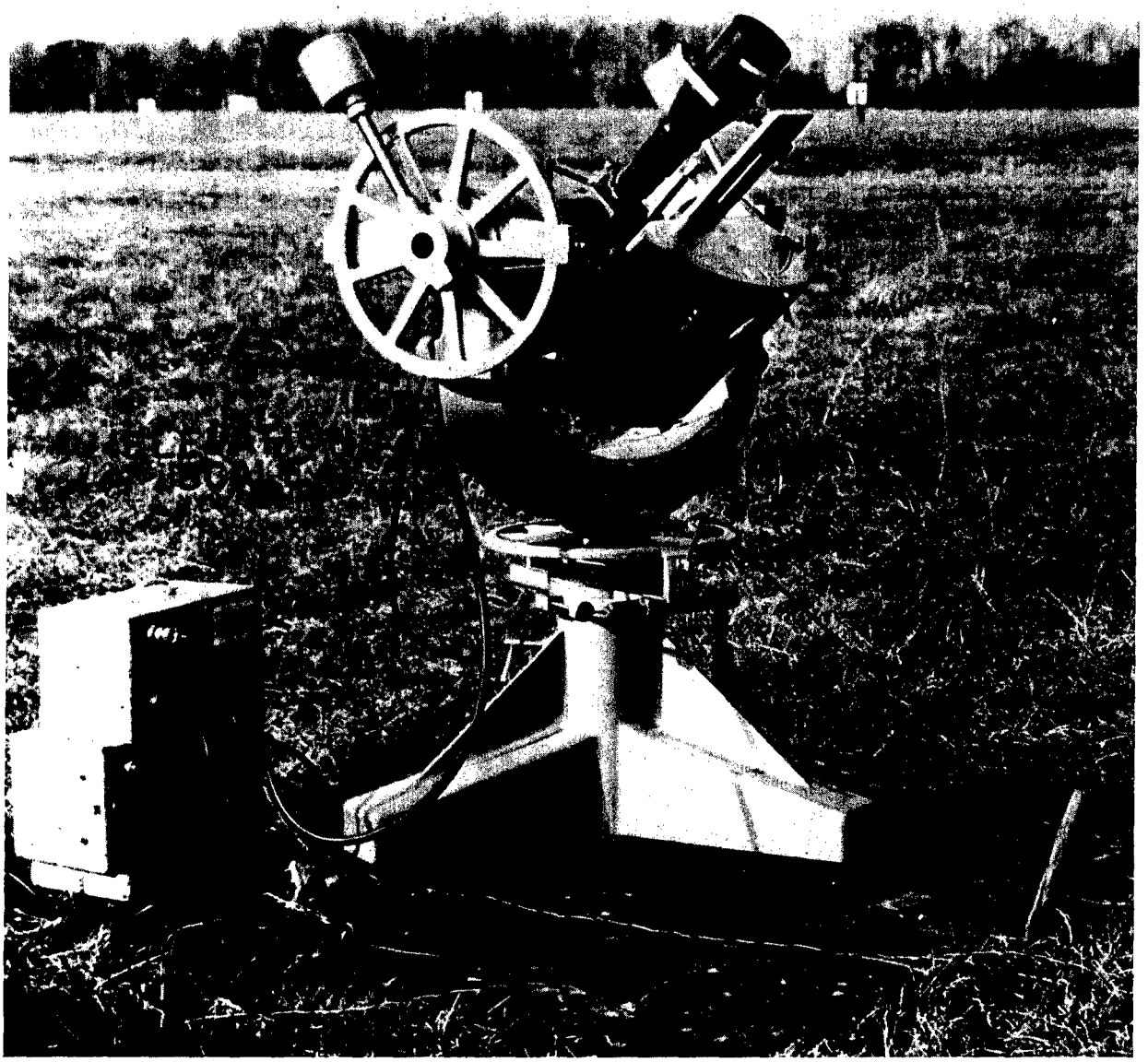

Figure A-1. Smear Camera in Use at Side of Trajectory

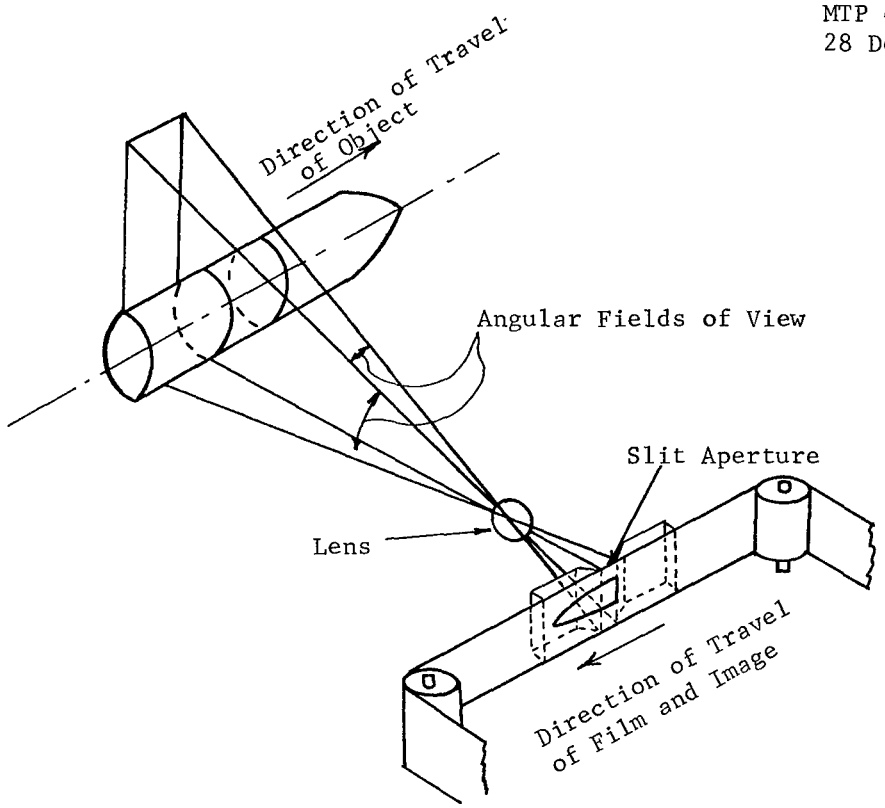

Figure A-2. Schematic Diagram of the Smear Camera

locations are considered. First, the camera must be positioned within its mount such that the film's motion is parallel to the target's direction and in the same direction as the targets image. Secondly, the long axis of the slit aperture must be positioned (rotated) such that it remains perpendicular to the target's direction. The ranges of these adjustments which can be made on each instrument are often the only field location limiting factors.

2. Ribbon Frame Cameras

Ribbon frame cameras (sometimes referred to as acceleration cameras are high speed cameras which produce separate narrow ribbon-like photographs of a sequency of events (Figures A-5 and A-6). To obtain the multiple, separate, photographs, these cameras incorporate a continuous film travel transport and some form of high speed shuttering. This shuttering usually consist of either a rotating prism or a rotating outer drum as depicted in Figures A-7 and A-8, respectively. A mask (variable slit opening) is incorporated between the film and the lens to control the frame size and an internal neon lamp supplies timing marks on the film. Fiducial markers are also projected internally upon the film projected for use as reference markers. Position along the ribbon frame is then measured as it changes from frame to frame and is plotted against equal time intervals to derive velocity and acceleration components normal to the line of sight.

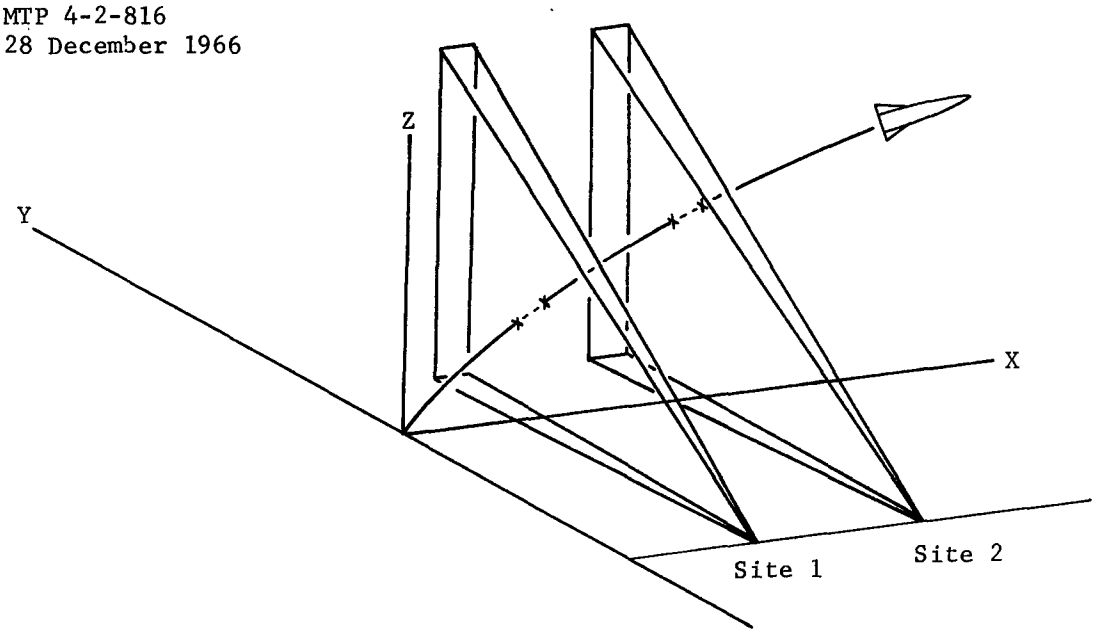

Figure A-3. Siting of Smear Cameras from Side of Trajectory (Form of Sky Screening)

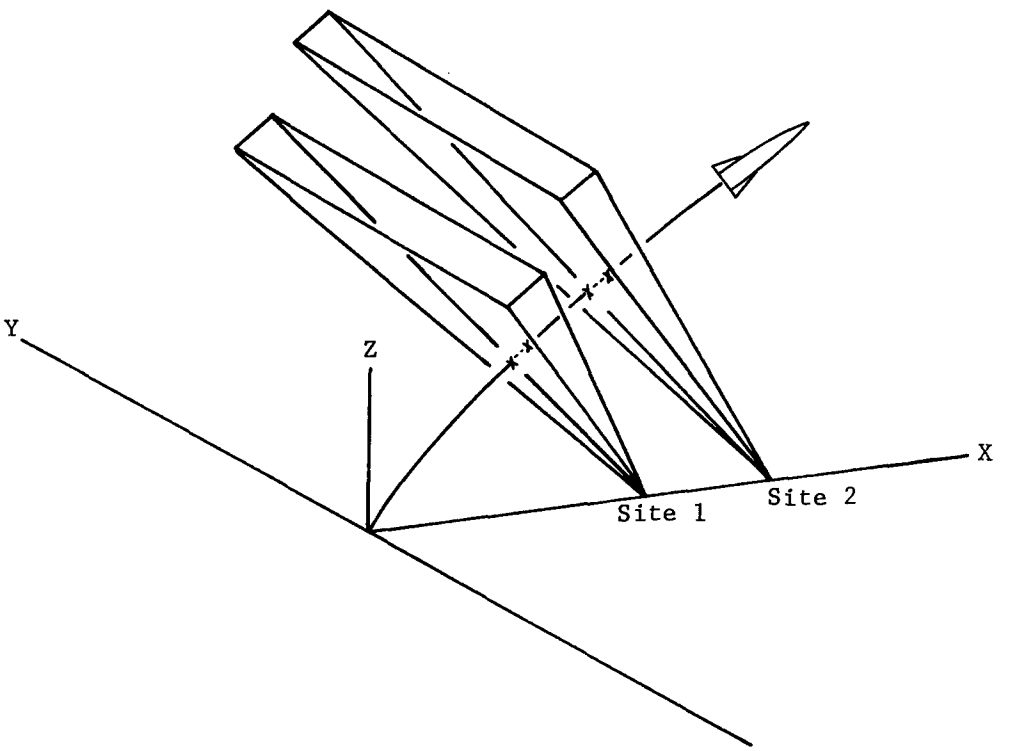

Figure A-4. Siting of Smear Cameras from Under Trajectory

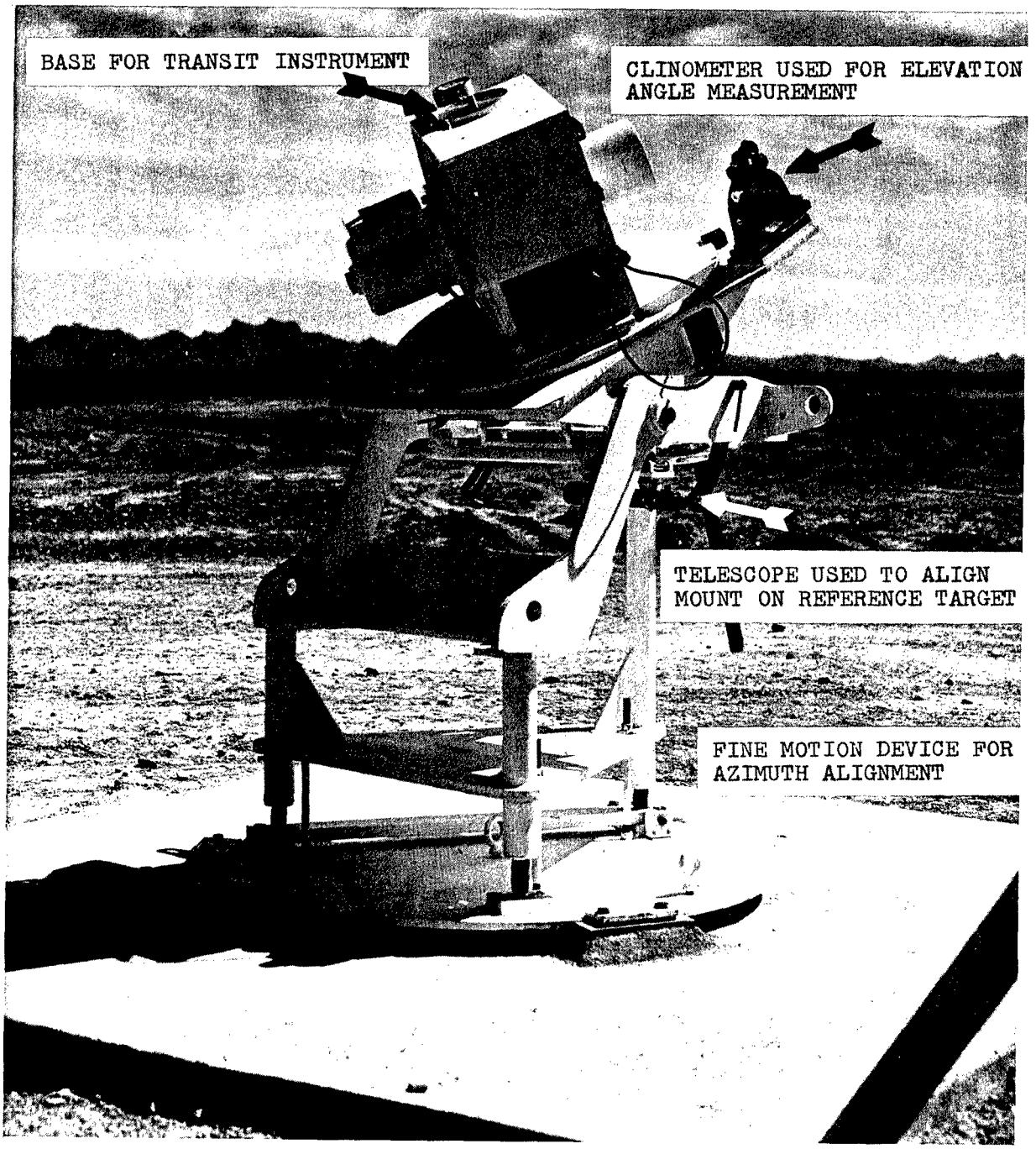

Figure A-5. Bowen-Knapp Camera in Operating Position on a Slant Plane Mount

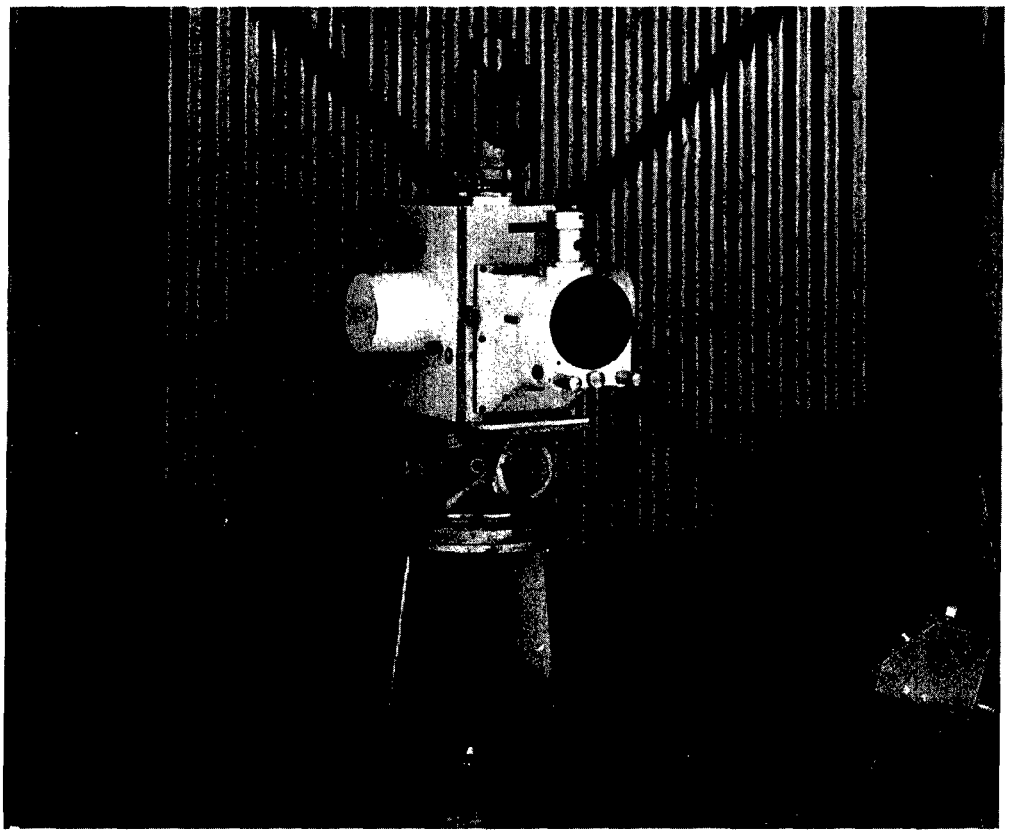

Figure A-6. Bowen-Knapp on Computer Plate Mount. Transit on Camera is Used for Calibration Target Measurements

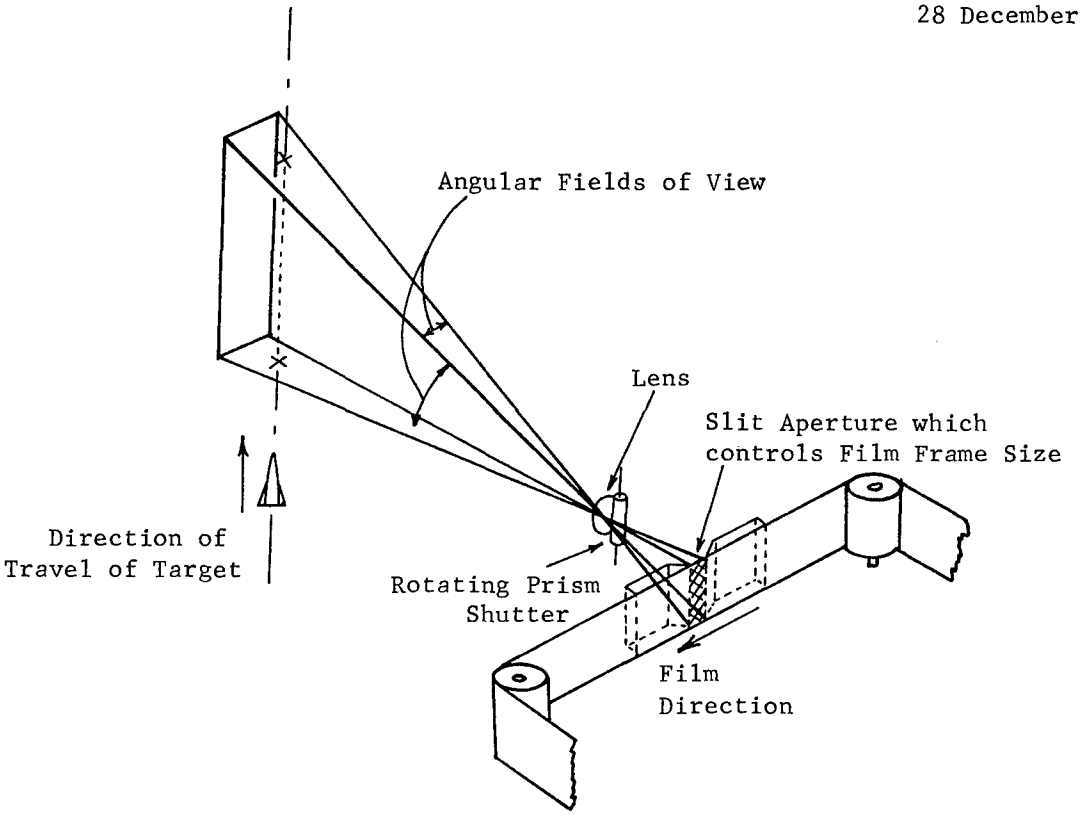

Figure A-7. Schematic Diagram of the Ribbon Frame Camera with a Rotating Prism Shutter

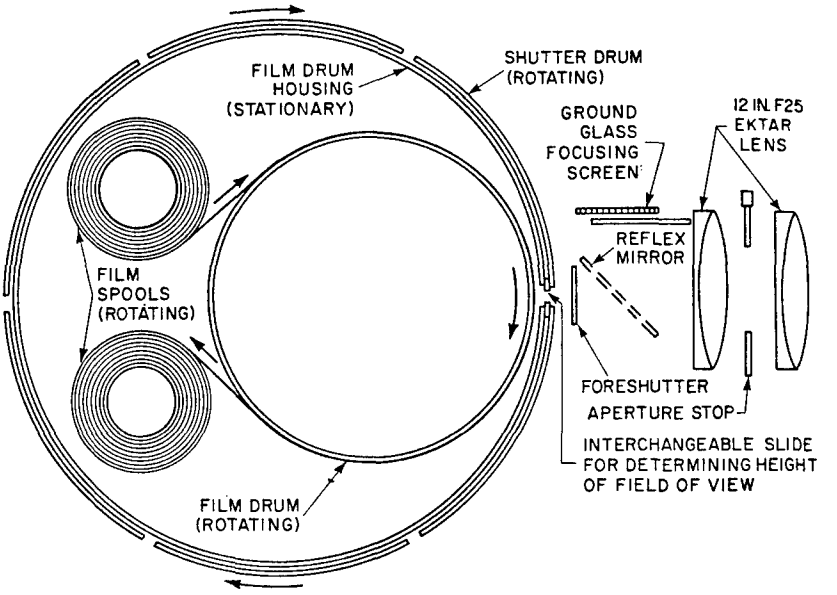

Figure A-8. Schematic Diagram of an Acceleration Camera with Rotating Drum

These cameras use 5.481 inch film and produce frame sizes from 5 by 0.15 inches to 5 by 0.9 inches. Exposure rates (frames per second) can be varied from approximately 30 to 180. Selection of any one set of values for frame size, exposure rate and slit size, for a particular camera must be made on the basis that all three of these parameters are interrelated. In other words, the choice of one affects the choice of the other two. Maximum operating time is approximately 45 seconds.

Interchangeable fixed local-length lenses are also available for use on these cameras; (the present combination being of 5, 7, or 10 inch nominal focal length). The lens selected affects the angular fields of view of the instrument as does the slit aperture.

As opposed to the smear camera, the ribbon frame camera must be oriented so that the film direction is perpendicular to the target's direction and the long axis of the slit aperture is parallel to the target's direction (Figure A-7). The camera is operated in a fixed (non-tracking) position selected to obtain maximum coverage over the desired portion of the trajectory. The number of possible field locations is almost unlimited; several multiple camera examples are shown in Figures A-10 and A-11. Camera sites No. 1 and No. 2 in Figures A-9 and A-10 depict an overlapping arrangement which allows the target's position to be determined, in addition to velocity and acceleration values. In order to increase coverage of the trajectory's length, the cameras may be arranged as depicted by sites No. 2 and No. 3 in Figure A-9 (although not shown here for clairty, in actual use the cameras orientations are adjusted so that their fields of view slightly overlap one another).

3. Ballistic Plate Cameras

Ballistic camera is a name sometimes attached to precision cameras in general, but, in most cases, the term applies to rigidly mounted plate cameras equipped to produce trajectory data. Because of the inherent precision associated with the word, "theodolite", ballistic plate cameras are also often referred to as phototheodolites.

A ballistic plate camera is distinguished by its lack of a film transport mechanism. It basically consists of a lens, a shutter, and a plate holder. Images are recorded on photographic plates which are optically flat and treated with special emulsions. Glass is selected for the stability of its physical dimensions. The plate is carefully located with respect to a low distortion lens. Shutters are operated periodically until the total exposure reaches the emulsion limits (as many as fifty exposures can be made on a single plate, depending on lighting conditions and on the duration of the flight across the optical field of view).

The images recorded bear either a constant-time or constant-displacement relation to one another. With the exterior orientation known for the usual minimum of two camera stations, a solution for the target's position can then be established by triangulation computations (MTP 5-1-031).

The most significant characteristic associated with the phototheodolite

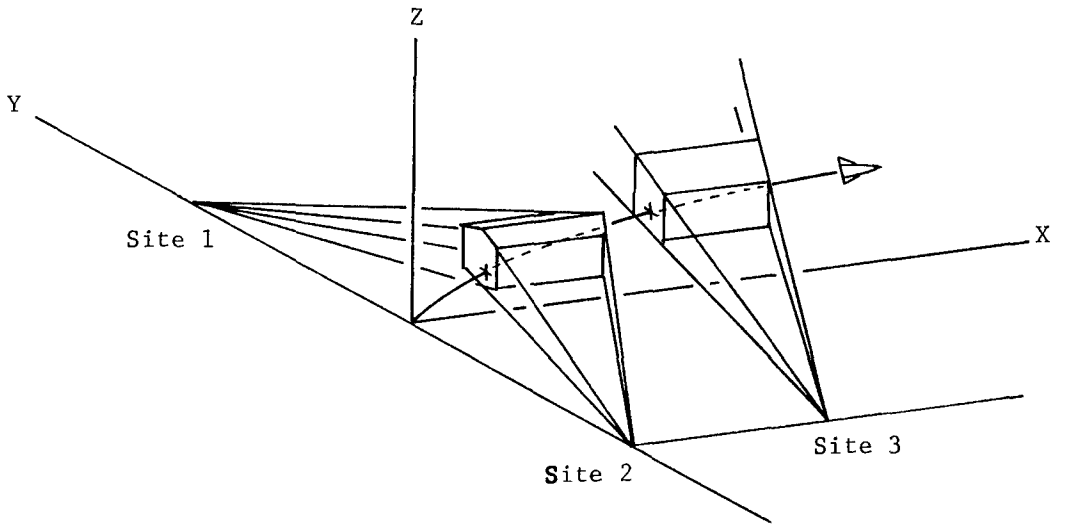

Figure A-9. Siting of Ribbon Frame Cameras

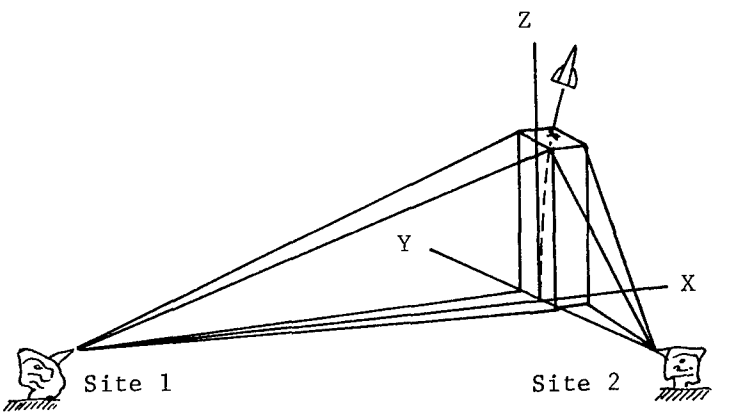

Figure A-10. Siting of Ribbon Frame Cameras

is the accuracy attainable in measuring discrete positions on a trajectory or orbit. This accuracy results from stabilization of the instrument on solid foundations, timed (usually by Bureau of Standards' stations) recording of images on glass plates, rather than ordinary photographic film, and precise camera orientation. The exterior orientation of the camera can be determined either from the theodolite mount or from stellar calibration. Stellar calibration (most accurate) involves obtaining images of distant fixed reference stars in the background of the photograph. Many of the instruments are provided with a special field alignment plate which can be used to align the telescope ocular so that its axis coincides with the camera axis. This allows the camera itself to be used as a conventional theodolite for purposes of surveying its own ground control points. This, in combination with the fact that the instrument mount dial graduations may be read to 0.1 arc sec, allows accurate determination of camera orientation without using stellar calibration.

Normally, a ballistic camera's use is centered about night operation because of the requirement for a stellar calibration if the instrument is to operate at the limit of its performance. In this case, optical beacons are carried aboard the target to furnish sources of light. Daylight operation may be accomplished with the use of suitable filters to obscure the major portion of background skylight. The imagery then consist of multiple exposures of the rocket exhaust flame. This is referred to as flame chopping. During daylight operation, the plate can be pre-exposed at an earlier time to secure the required star trails.

A wide selection of fixed focal length lenses are available for use on these cameras depending on operating distances. The field of view is affected accordingly.

Exposure rates usually range from 10 to 1 frames per second.

4. Motion-Picture Cameras

The subject of motion-picture photography encompasses such a large number of instruments that only the basic characteristics applicable to the majority are discussed here.

Motion pictures ordinarily consist of a series of still photographs obtained at regular intervals of approximately 1/20 to 1/30 second. So-called "slow-motion" motion pictures are those which have been taken at rates substantially in excess of the standard 16 to 24 frames per second rate, but which are projected at normal speeds. Cameras used for this type of photographing are usually of the standard commercial type. In general, they utilize photographic quality lenses, opening and closing leaf-type shuttering, and 8, 16 and 35 millimeter film.

High speed cameras are those with exposure rates of approximately 30 to 180 frames per second. This requires some form of high-speed shuttering such as a rotating prism shutter, etc., and a more sophisticated film transport mechanism. Film size is usually 35 millimeter. These cameras are modified into other specialized instruments, adapted to optical instruments for photographic recording, and simply used alone. Figure A-11 is an example of a high

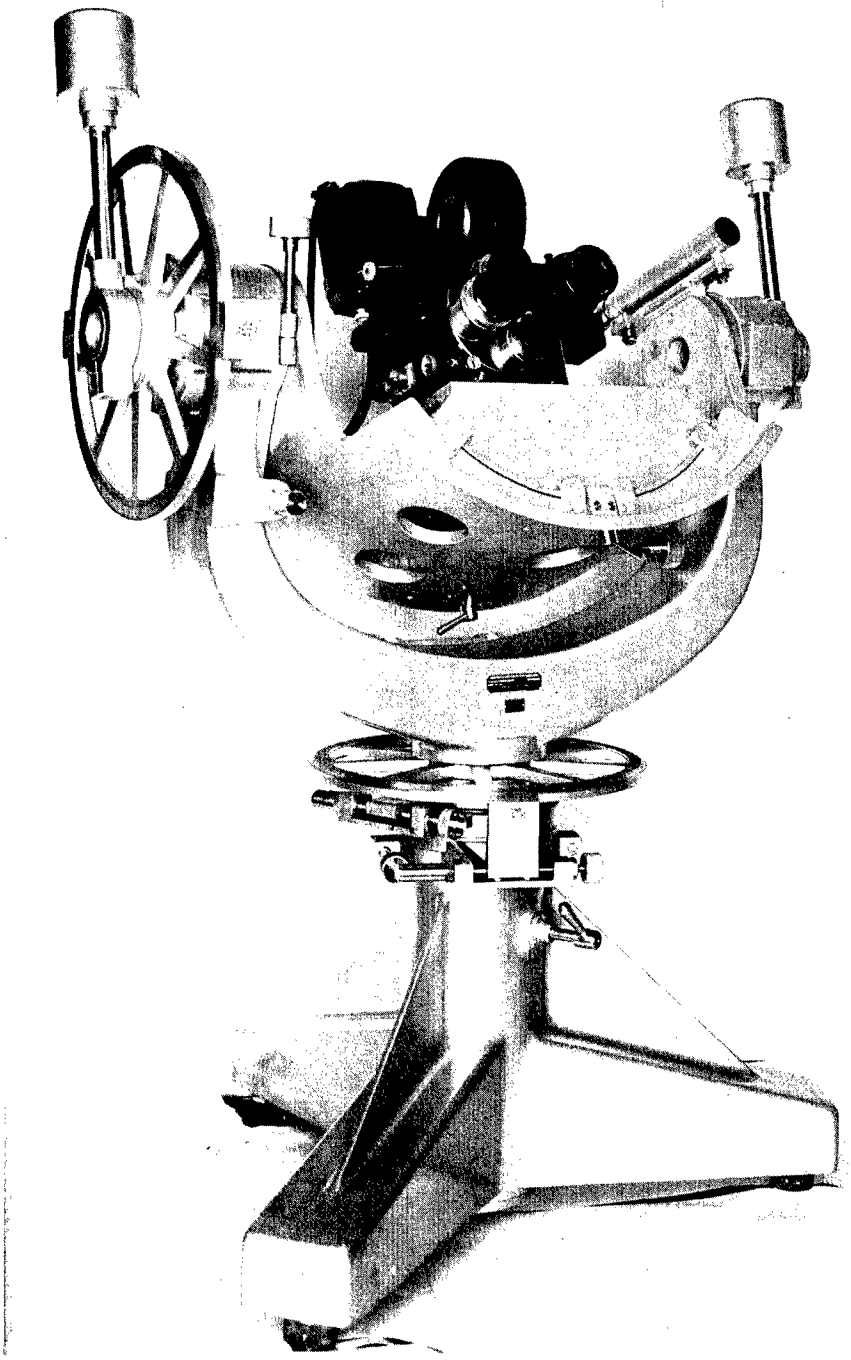

Figure A-11. Mitchell High Speed Camera on a Three-Axis Mount

speed camera operated on a particular type of three-axis mount.

Very high speed cameras operate at exposure rates up to approximately 15,000 frames per second. Film sizes can be 16 or 35-millimeter and maximum operating time is about 0.5 seconds. Because of this short operating time, these cameras find little application as recording devices for other optical equipment (See paragraph 5) in obtaining trajectory data during the flight portion of the test.

5. Tracking Telescopes

In order to increase photographic instrumentation's distance surveillance abilities, the trend has been toward larger optics which require heavier and more precise mounts and controlled environments for the instruments. These instruments are termed tracking telescopes when the objective optics and tracking mount form the major portion of the instrument. The camera is simply treated as a readily available recording device.

These instruments are characterized by focal length lenses from approximately 100 inches up. With focal lengths of this size, reflection techniques or combinations of reflective elements and lenses must be utilized in order to limit the overall size of the instrument.

Azimuth and elevation scale readings are projected upon the film, just as with the cinetheodolites (MTP 5-1-031). In fact, tracking telescopes are simply enlarged cinetheodolites, except not as much a metric instrument as a surveillance one (See Appendix B, paragraph 3).

Camera characteristics for these instruments are discussed briefly in paragraph 4 as concerns high speed cameras.

Tracking telescope instruments are intended primarily to obtain qualitative information, but they are used for event studies, attitude information, scoring or miss-distance information (impact), documentary films, and coarse position data.

6. Bacon Two-Dimensional Strip Camera

The two-dimensional camera is used primarily for launcher stabilization studies which are concerned with time-displacement relationships. The camera, mounted upon the launcher, is designed to provide on 70-mm film two traces of a distant, stationary, point-light source. One trace, representing vertical motion versus time, is free of horizontal motion effects while the second, or horizontal, is devoid of vertical motion influences (Figure A-12).

The film transport rate is approximately one-half inch per second and is exposed, shutterless, through two narrow slits and two cylindrical objective lenses whose principal axes are mutually perpendicular.

The best results from this camera system have been obtained during night operation.

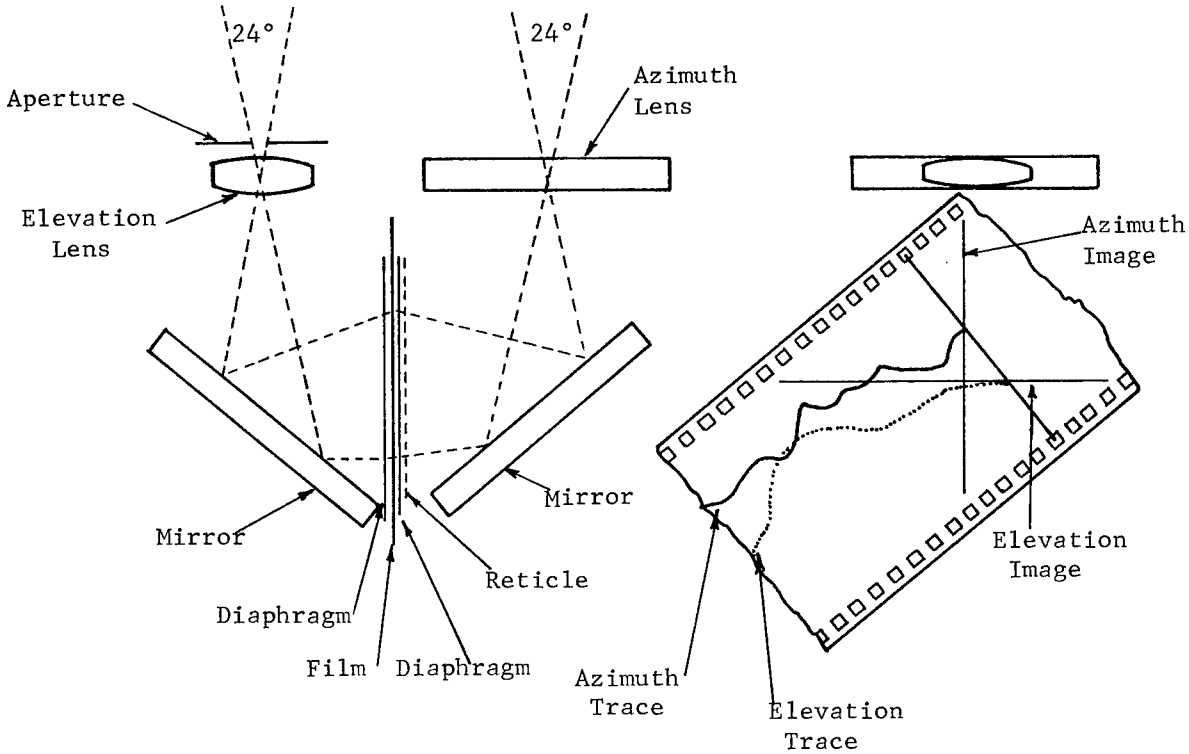

Figure A-12. Optical Diagram of Bacon Strip Camera Recorder
Left: Longitudinal Section, Right: Superimposed Images on Film

APPENDIX B

PLANNING INSTRUMENTATION COVERAGE

This appendix discusses some of the more important factors which must be considered when planning and performing trajectory studies utilizing photographic instrumentation.

1. Expected Flight Characteristics

Certain information is necessary before photographic coverage (selection, location, etc.) for any particular test can be planned. This information basically consists of physical measurements of the test target (projectile, missile, etc.) and estimates of all parameters associated with the target's trajectory such as expected velocities, accelerations, firing elevations, etc. These estimates are usually obtained from previously performed simulation tests or a mathematical analysis. Photographic coverage is then planned around the available information concerning flight characteristics and test data requirements.

2. Test Data Requirements

Entire trajectory studies are usually impractical because of the large number of cameras required for complete coverage. Due to this, trajectory data is usually considered in four parts; launcher, pre-burnout, post-burnout, and impact data. These divisions result from the variation in types of instruments used for coverage and the relative importance of data from these positions. The launcher and pre-burnout divisions are usually considered the most important. In the case of non self-propelled projectiles, the pre-burnout and post-burnout divisions would be combined. The four are discussed below.

a. Launcher Data

Tipoff angle, acceleration on the launcher, and launcher reactions are obtained with high-speed cameras operating up to 10,000 frames per second. Artificial backgrounds may be needed. Smoke and blast interference and the adequacy of image size should be considered in selecting camera locations.

b. Pre-burnout Trajectory Data

The pre-burnout trajectory may be instrumented to obtain yaw, pitch, roll, space position, velocity, and acceleration. These data are obtained with fixed cameras, which are located beneath and to the side of the trajectory. Requirements for yaw, pitch, and roll are more restrictive insofar as camera positioning and image size are concerned. Images obtained for pitch and yaw should be at least 0.006 inches wide with a length-to-width ratio of no less than 4:1. Image sharpness, too, is critical and must be considered in selecting both the camera site and focal length of the lens. Roll data require that the target be painted in some geometrical pattern of contrasting colors, usually a black-on-white spiral with a lead of one diameter (see also MTP 4-2-811).

c. Post-burnout Trajectory Data

Post-burnout trajectory data are usually limited to space-position, velocity, and acceleration. The image requirements are not so severe as for pitch and roll, and usual images may be as small as 0.004 to 0.007 inches. Cinetheodolites (MTP 5-1-031) operating at four or more frames per second and tracking telescopes (Appendix A, paragraph 5) are used to record azimuth and elevation angles to the target. More accurate data can be obtained utilizing ballistic plate cameras but the coverage is usually limited.

d. Impact Data

Impact coordinates are obtained either by surveying or triangulation from observation positions (see MTP 3-2-825). Impact-miss distance may be obtained photographically if the dispersion of the round will permit adequate coverage.

3. Instrument Characteristics

In addition to the particular characteristics and thus measurement capabilities of the instruments as discussed in Appendix A, there exist a broader categorization defining capabilities. Range optical instrumentation may be divided into two categories; metric or surveillance. Metric instruments refer to those that are used for recording quantitative data as distinguished from surveillance types used for qualitative or documentary data.

In general, the precision and specialization associated with the metric instruments limits the portion of overall desired data which can be obtained utilizing any one particular type of metric instrument or any particular number of similar metric instruments. For this reason, several different types are almost always used at any one time. Some of the more common metric instruments are the cinetheodolites (see MTP 5-1-031), ballistic plate cameras, ribbon frame cameras, and smear cameras.

In contrast to the metric instruments, surveillance instruments utilize photographic quality optics rather than photogrammetric to obtain pictorial records of such events as unique occurrences of technical significance, target launch, target exhaust temperatures, entire trajectory observation, etc. Surveillance type coverage is most extensive during target launching and recovery or impact. The use of surveillance instruments can be just as important as the use of metric ones. For example, should some electronic instrumentation fail or some unexpected violence occur in the vicinity of a missile launcher, the documentary films may be the only source of data from which the cause of failure can be deduced. The instruments used in surveillance type work consist mainly of conventional still and motion-picture cameras, and tracking telescopes.

Photographic studies are continually plagued by one main disadvantage which is characteristic of almost all photographic instruments; immediately discernible real time data is not produced.

APPENDIX C

FIELD LOCATION CONSIDERATIONS

Although each type of photographic instrument has different characteristics which control its field location, there are some location considerations which are applicable, in general, to many types. Some of these are discussed below.

1. Base Materials (for those which are not trailerized)

The actual ground upon which the instruments are placed should be dry, firm, and level; concrete bases are usually prepared for permanent stations while slabs of armor plate may be used for semi-permanent or temporary stations.

2. Operating Distance

The optimum distance at which the instrument should be located from the target is a function of three parameters (Figure C-1). The first factor is the minimum size of image on the film plane that can be regularly tolerated in film measurement. The smallest image that can be consistently detected is approximately 0.004 inch. The second factor is the focal length, f, of the lens of the camera. Factor number three is the lease dimension, i, of the object being photographed. All of the factors should be measured in the same unit of measurement, usually feet. Since the ratio of the minimum film image dimension, 0,004/12, divided by the focal length, f, is equal to the object dimension i, divided by the object distance, d, the following equation applies:

$$\frac{0.004/12}{f} = \frac{i}{d}$$

Since the object dimension, i, is known, the theoretical maximum distance, d, that an object can be located from the camera lens can be determined for a lens of any focal length. It should be noted that, practically, the distance, d, must frequently be decreased due to anticipated difficulties caused by haze, sun interference, and sudden tracking accelerations.

3. Slewing (for tracking instruments)

The process by which a tracking device rapidly varies its orientation in azimuth and elevation is termed slewing. Maximum slewing rates are a function of the mechanical inertia of the tracking mount and the angular velocity of the target relative to the tracker. The latter case is seen to be a function of the target velocity and, in relation to field location, distance of target from tracker. This distance factor is also important in the case of the angular increase in momentum required of the tracker when the target is suddenly being acquired, such as at launch or after being initially acquired through the use of supplementary acquisition equipment.

4. Interference

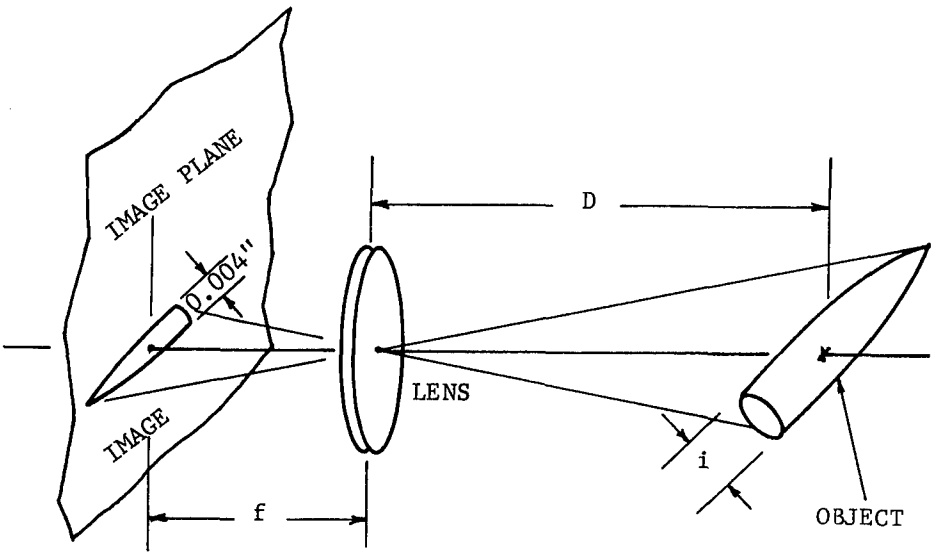

Figure C-1. Tracking Distance Factors

In most cases, the field placement of other types of trajectory instrumentation (electronic; i.e. radar, etc.) will not interfere with photographic instruments, except to possibly block their field of view. However, the opposite is not true. For example, the fixed position cameras located behind the launcher or those located in front and directly beneath the trajectory in Figure C-2 might very well interfere with such instruments as a Doppler radar (MTP 4-1-005).

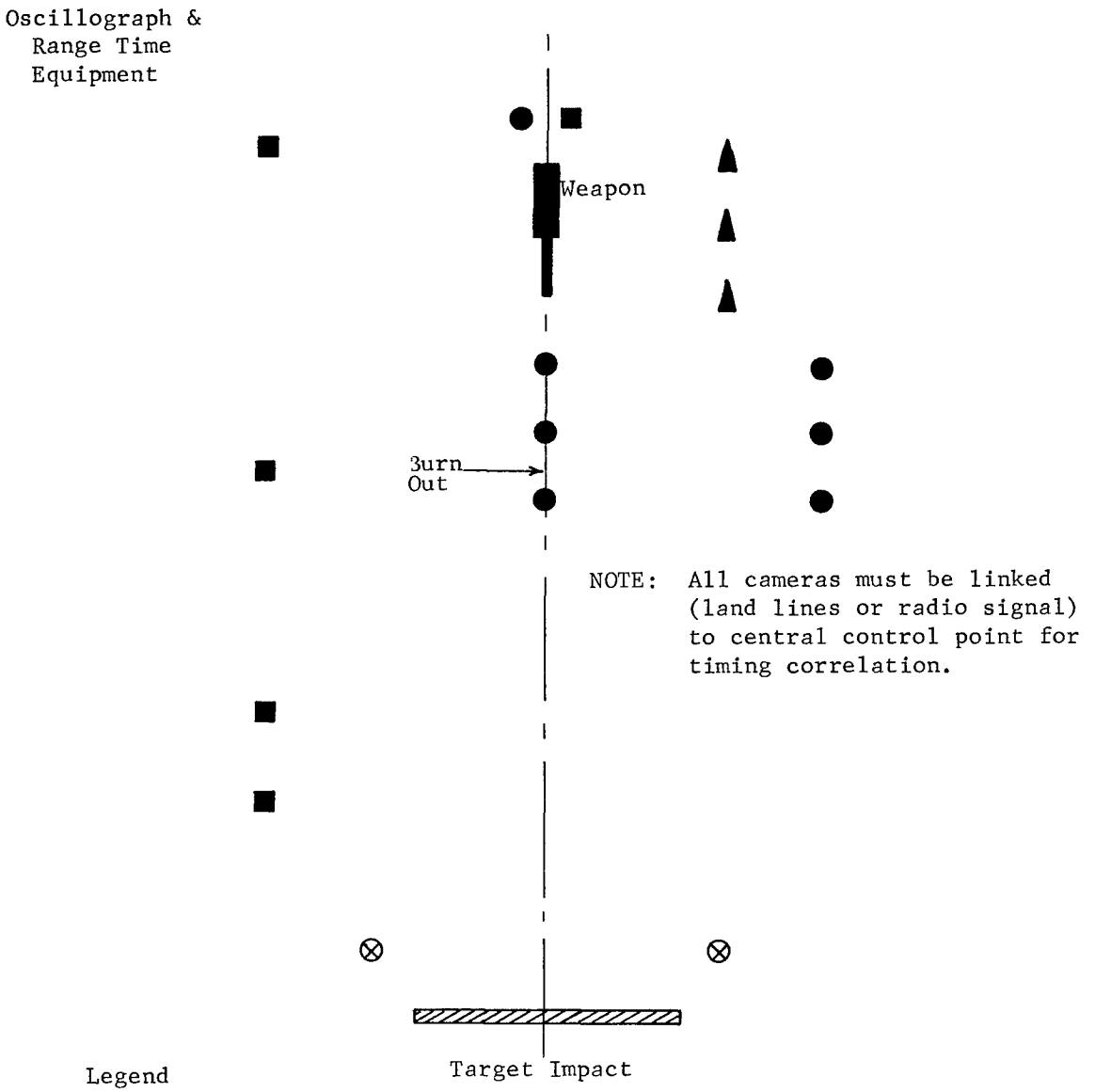

Legend

- ■ Tracking cameras - position data
- ▲ High Speed cameras - launcher data
- ● Fixed cameras - yaw, pitch, roll, position data
- ⊗ Fixed cameras - miss distance and striking angles

Figure C-2. Field Arrangement of Instrumentation for One Possible Trajectory Data Acquisition

APPENDIX D

TIMING SYSTEM

The prime function of the timing system is to provide a common reference from which all range measurements can be correlated. A secondary function is to provide a means of controlling equipment on the basis of either time sequencing or time synchronization. In considering these functions, it becomes apparent that this system is the most important support system of the test range, and as a result, requires particular attention during range testing. Since a major test range is somewhat unique, both in physical arrangement and in primary functions, its timing requirements also have seemed to be unique; as a result, local timing systems have tended to evolve independently at each test range and a wide variation in timing equipment has resulted. Compatibilities between the local timing code specified for the data instruments along with the capabilities of the range communications network to transmit the signals, the means for processing timing data, and the variety of instruments to which the time signals must be distributed have influenced each particular test range timing system. Basically, this timing system consist of equipment depicted in Tables I and II.

As a result of the many variations of instrumentation (data and timing) among different ranges, an organization known as the Inter-Range Instrumentation Group (IRIG) has been formed. This organization consist of members who are actively engaged in operating various government ranges. The purpose of the group is to exchange information of mutual interest and establish working standards for the field of range instrumentation as a whole. In particular, there are four timing codes which have been standarized by the IRIG. These four codes are all binary type codes with time frames of 0.1 sec, 1.0 sec, 1 min, and 1 hour. These identification codes correspond to timing pulses of 1000 pulses/sec, 100 pulses/sec, 2 pulses/sec, and 1 pulse/min, respectively. Timing equipment which supply these standard time coded signals are classified as IRIG time coders.

The range user's requirements are coordinated best with the IRIG specialists whose combined knowledge of the instrumentation and how to use it at the particular range offers maximum assurance that each element of required test support will be complete.

TABLE I TIMING EQUIPMENT

TYPE	DESCRIPTION	POWER REQUIREMENT	TYPICAL USES
Electronic timing standard	1000 to 10,000 cycle crystal controlled oscillator Has provision for remote operation	115 V 60 cy AC	Generates timing pulse for use with very high speed cameras
Electronic timing standard	2½ to 100 cycle tuning fork controlled oscillator	115 V 60 cy AC	Generates timing pulses for use with high speed cameras
Sequential coder	Counts up to 2550 pulses and repeats	115 V 60 cy AC	Generates coded time pulses for use with relatively long running equipment

TABLE II RECORDING EQUIPMENT

TYPE	DESCRIPTION	POWER REQUIREMENTS
Oscillograph Cameras	Wave shapes and timing may be recorded using suitable 35mm continuous motion cameras or still camera.	115 V 60 cy 1 phase AC

APPENDIX E

VISIBILITY AND CONTRAST

Optical instrumentation may be compromised by fog, haze, smoke, dust, clouds, or precipitation. Even on clear days or nights the target must be distinguished from its background. Sunlight reaches the target in flight from different directions as time of day and position change. Reflections from the target to the optical instrument change constantly with target aspect and angle of illumination. Brightness of the sky in the background changes with time of day, atmospheric conditions, and the direction of the line of sight. The brightness of certain types of paint may vary with the angle of light incidence. All these variables contribute to a wide variation of optical visibility. To avoid this variation, some test ranges employ infrared detectors for special night operations, tracking head generators, such as rocket and jet exhausts, or special emitters carried on the missile.

Visual contrast of target with the background against which they are observed may be expressed as the ratio, $C = (B-B')/B$, where B is the target brightness and B' is the brightness of the background, both variable over wide limits. Dark objects may have a maximum contrast of (-1) against a bright sky. At a given distance, bright light emitters on the target can result in positive contrast. But as target distance increases, contrast is reduced by the combined effects of absorption, scattering of the target signal, and scattering of background radiation along the path between target and detector. Apparent contrast depends on brightness of the horizon, brightness of the object at zero distance, atmospheric scattering, atmospheric absorption, contrast transmittance of the atmosphere, and the contrast threshold of the observer.

At near distances, the image of the target reveals details of shape. At some greater distance, the target image is merely the diffraction pattern of a point source. A target must have a minimum brightness of twice the sky background if its positive contrast is to exceed the negative contrast of a black target. The brightness of blue sky is about 0.8 candles/cm^2. Practical instrumentation requires an artificial light source to have a brightness equivalent to 50 candlepower in order to obtain photographs at a distance of 1 mile, but this intensity must be increased at least as the square of the desired maximum distance.

Since operators show limited ability to track smoothly, electronically controlled aids to tracking are required to enhance contrast. One such aid remembers and sustains angular tracking rates set in and corrected by the operator. Smooth tracking results in target image integration and reinforcement.

Choice of paint colors and light filters, application of fluorescent paints to specific tests at different regions of the sky, automatic control of camera shutter openings, and similar techniques have not yet been standardized completely in relation to choice of photographic film. The selection of black and white film over color film is usually made for reasons of cost and speed of development; use of color film, however, facilitates identification of images

on the basis of color. High-flying missiles or aircraft can be marked with highly reflective red or orange colors. A red filter may be incorporated into the optical system of the sighting telescope, resulting in the operator being required to wear dark-red goggles before tracking. Sky radiation is predominantly blue and only slightly red. The red orange fluorescent paints and improvements thereon, reflect almost all the red-orange components of sunlight and practically no blue.

Greatly dependent on contrast, the minimum acceptable image size is a matter of local definition. Film grain size, other objects in the background, change in image position from frame to frame, the needs of particular types of measurement, and personal qualifications of the film reader affect the image size required for positive identification. However, an image diameter of less than .001 inches is not likely to be satisfactory; a diameter of not less than .004 inches is considered generally acceptable by film reading personnel. Another consideration affecting image size is discussed in Appendix E.

Lighting of photographic subjects is sometimes difficult when high-speed cameras are used. This problem is caused by high exposure rates and the resulting short exposure times. Additional illumination is obtained with flood lamps or flash lamps. Use of flash lamps provides another method for programming the recording of desired functions (MTP 4-2-807).

APPENDIX F

REFRACTION ERRORS

Refraction errors result from the bending of light within an atmospheric path. When a target and an optical instrument both are within atmospheric strata of substantial density, the light suffers terrestrial refraction. Terrestrial refraction is prevalent when the elevation angle of the line of slight is less than 3 degrees. At higher angles it is absent sometimes; it generally decreases with increasing elevation angle until the effect disappears at elevation angles near 90 degrees.

Photographic data are corrected for refraction according to local range experience and test data requirements. A local standard atmosphere is often defined and applied to basic calculations. Current local meteorological measurements are used to modify the standard atmosphere assumption in refined computations. The amount of refractive error, expressed in radians, is related primarily to the vertical height of the observed object and to its horizontal distance from the optical instrument (Figure F-1). In the expression which follows, local meteorology is neglected:

$$r = \frac{bD}{aH^2} e^{-aA} \left[aH + e^{-aH} - 1\right] \qquad (1)$$

where $a = 3.16 \times 10^5$

$b = 2.77 \times 10^4$

H = vertical height (in feet) of the object above the horizontal plane containing the observer

A = vertical height (in feet) of the observer above sea level

D = horizontal component of distance (in feet) between object and observer

Angular errors calculated from the foregoing expression range from 80 sec of arc to 90 sec of arc as the elevation angle decreases from 25 degrees to a horizontal angle of 0 degrees and the slant range is kept constant at about 100,000 ft.

If the test range catalogs its local meteorological data, refinements of the general relationship can be accomplished by the introduction of empirical coefficients into practical equations. It may well be too costly to stage special calibration operations, but control of errors can be improved gradually if all test data are sampled, reviewed, and processed expressly for the purpose of error reduction.

Another expression has been developed for computation of refraction where temperature corrections are found to be important:

$$r = c(\cot E)\left\{1 + \frac{RT_o}{A}\left[\left(1 + \frac{LH}{T_o}\right)^{-1/LR} - 1\right]\right\} \qquad (2)$$

where $c = 2.762 \times 10^4$

$R = 53.4 ft/°F$

T_o = ground temperature gradient (-0.0035°F/ft)

A = altitude of the object in feet, measured from sea level

E = elevation angle

For more practical computations of the refractive error, the particular test range may have associated with it, a graph similar to that of Figure F-2. In this case, the refractive error can be determined for any particular range distance by use of the equation:

$$r = (r_{1000yd})\frac{D}{1000} \qquad (3)$$

For example, consider a captive balloon held some 2000 feet above a ground position 15,000 yards from an optical instrument. From Figure F-2, $r_{1000yd} = .044$ and from equation No. 3, the total refractive error for 15,000yds and 2000 ft altitude is r = (.044)(15) = .660 minutes of arc. The number of feet the target would appear displaced upward (h) for this example is given by:

$$h = \frac{9.897r\ (D \times 10^{-3})}{\cos^2 E} \qquad (4)$$

The angular elevation, E, measured in this example was 2° 31" thus,

$$h = \frac{9.879\ (0.660)(15)}{(0.999)^2} \approx 9 \text{ feet}$$

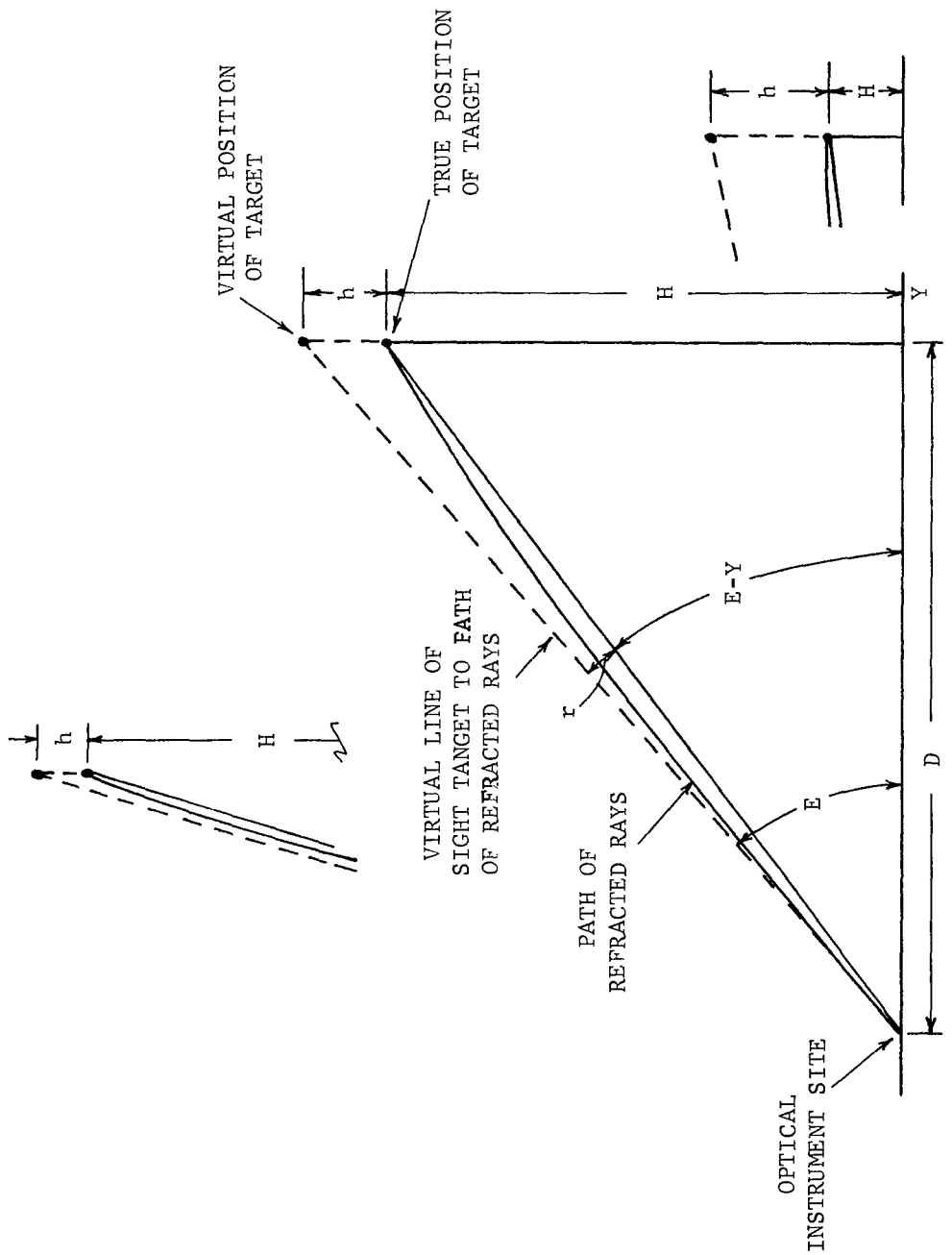

Figure F-1. Effect of Refraction on Virtual Position of an Object Observed from a Single Instrument. E = elevation angle, r = error in elevation angle, H = true altitude above horizontal, h = error in altitude, D = horizontal distance.

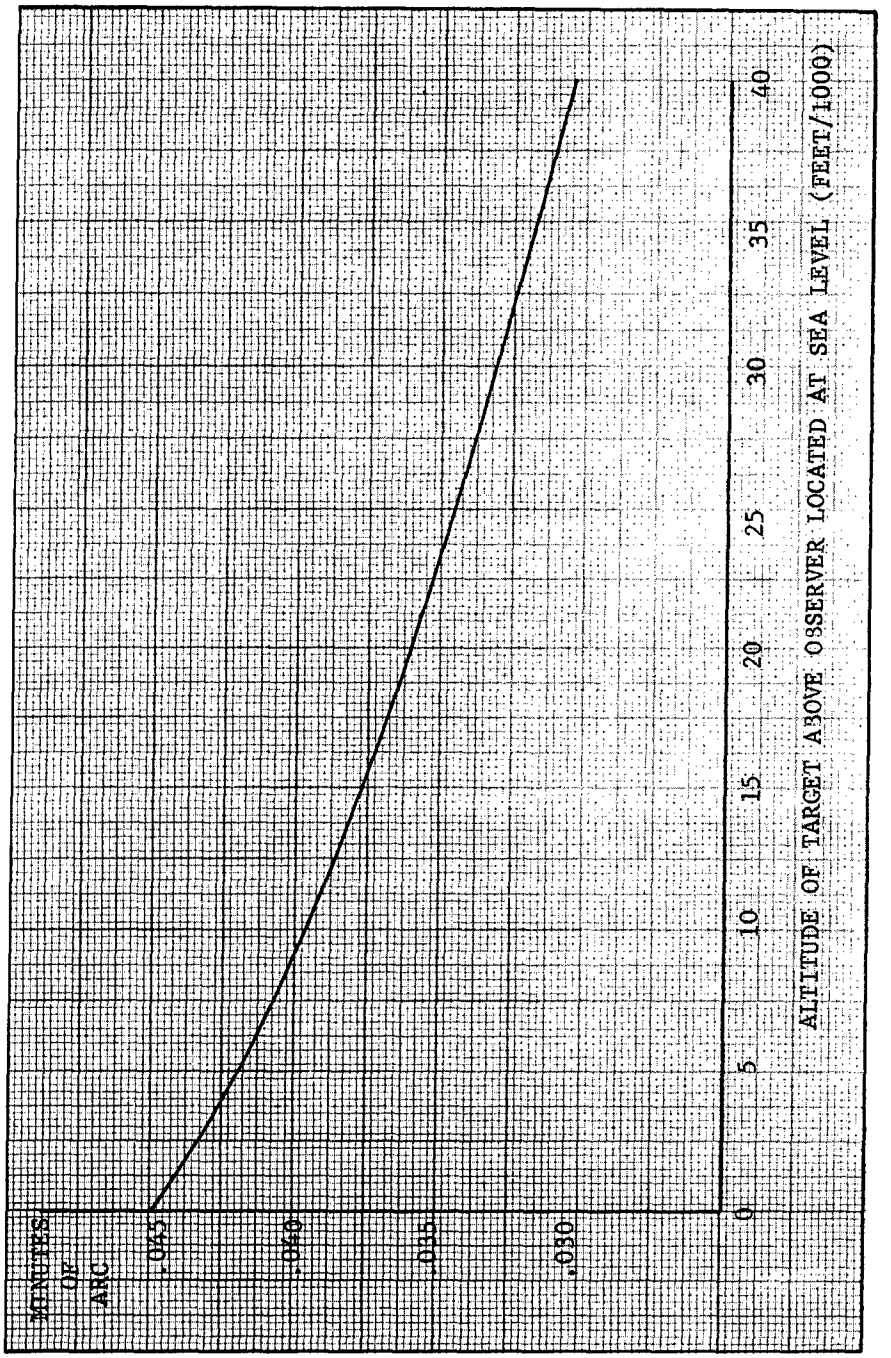

Figure F-2. Terrestrial Refraction Per 1000 Yards of Horizontal Range.