ESD-TR-70-352

ESD RECORD COPY
TRI Call No. RETURN TO
SCIENTIFIC & TECHNICAL INFORMATION DIVISION
Copy No. (TRI), Building 1210 cys.

ESD ACCESSION LIST
TRI Call No. 72180
Copy No. 1 of 2 cys.

ESD RECORD COPY
RETURN TO
SCIENTIFIC & TECHNICAL INFORMATION DIVISION
(TRI), Building 1210

Quarterly Technical Summary

Air Traffic Control

15 November 1970

Prepared under Electronic Systems Division Contract F19628-70-C-0230 by

Lincoln Laboratory

MASSACHUSETTS INSTITUTE OF TECHNOLOGY

Lexington, Massachusetts

AD0716816

This document has been approved for public release and sale;
its distribution is unlimited.

Quarterly Technical Summary

Air Traffic Control

15 November 1970

Issued 28 December 1970

Prepared under Electronic Systems Division Contract F19628-70-C-0230 by

Lincoln Laboratory

MASSACHUSETTS INSTITUTE OF TECHNOLOGY

Lexington, Massachusetts

This document has been approved for public release and sale; its distribution is unlimited.

The work reported in this document was performed at Lincoln Laboratory, a center for research operated by Massachusetts Institute of Technology, with the support of the Department of the Air Force under Contract F19628-70-C-0230.

This report may be reproduced to satisfy needs of U.S. Government agencies.

Non-Lincoln Recipients

PLEASE DO NOT RETURN

Permission is given to destroy this document when it is no longer needed.

INTRODUCTION

Major effort has continued on the development of improved surveillance and communication subsystems to meet the demands of the automated NAS/ARTS Air Traffic Control system. Field measurements of the beacon interference environment were completed and studies to upgrade sensor efficiency were intensified. Effort toward the development of a discrete address interrogator with a data link was concentrated upon the core problem of designing the signaling waveforms for both up and down links of the system. Particular attention is being given to system performance in the interference and multipath environment, as well as to system and equipment compatibility with ATCRBS.

The project to develop an airborne situation display of NAS/ARTS data has reached the stage for definition of an experimental system. The computer simulated cockpit display has evoked enthusiastic response from experienced pilots and traffic controllers. Preliminary work on the laser beam warning system for Logan Airport was completed with successful demonstration of the prototype hardware in the Laboratory.

Much of the development activity at the Laboratory in advanced electronic systems, radars, communication techniques, signal processing, computer applications, phased-array technology and satellites is directly applicable to ATC (see Frontispiece). While members of the Laboratory continue to express interest and participate in meetings on instrument landing systems, time-ordered navigation and communication techniques, data links, weather radar, and satellite applications, funding constraints have made it necessary to limit the work of the present program to a few specific tasks. Direct DOT or FAA support would permit the more effective application of the technology developed by the military to the ATC problem.

H.G. Weiss
Head, Division 4

15 November 1970

Accepted for the Air Force
Joseph R. Waterman, Lt. Col., USAF
Chief, Lincoln Laboratory Project Office

CONTENTS

	Introduction	iii
	Organization	vii
	Division 4 Reports on Air Traffic Control	ix
I.	SUMMARY	1
II.	BEACON SYSTEM DEVELOPMENT	1
	A. ATCRBS Interrogator Antenna Upgrading	1
	B. ATCRBS Interference Environment	3
	C. Advanced Interrogator Antennas	4
	D. Discrete-Address Interrogator Study	5
	E. Surveillance System Structure	8
III.	AIRBORNE TRAFFIC SITUATION DISPLAY	11
	A. Airborne Traffic Display-Design Studies	11
	B. Display Simulation (Electronic Systems Laboratory, Flight Transportation Laboratory, Man-Vehicle Laboratory)	12
	C. Cockpit Simulator	13
IV.	WARNING SYSTEM FOR RUNWAY 4R AT LOGAN AIRPORT	13

ORGANIZATION

DIVISION OFFICE

Herbert G. Weiss, *Head*
Francis X. Brady, *Assistant*

GROUP 41

Paul R. Drouilhet, Jr., *Leader*
Clarence W. Jones, *Associate Leader*
Melvin L. Stone, *Associate Leader*

H. Berger
J. U. Beusch
H. Blatt
R. W. Bush (MIT ESL)
G. V. Colby
T. J. Goblick
E. J. Kelly
R. J. McAulay
J. D. Welch

Cooperative MIT campus activities are under way at:
Flight Transportation Laboratory — Aeronautics and Astronautics Department
Electronic Systems Laboratory — Electrical Engineering Department
Man-Vehicle Control Laboratory — Aeronautics and Astronautics Department

DIVISION 4 REPORTS ON AIR TRAFFIC CONTROL

1 June through 31 October 1970

PUBLISHED REPORTS

Technical Notes

TN No.				DDC No.
1970-17	A Theory of Multiple Modes in Avalanche Diodes	H. Berger	9 June 1970	DDC AD-711923
1970-19	High Efficiency Modes in Avalanche Diodes	H. Berger R. J. Sasiela	3 August 1970	DDC AD-710201

Journal Article*

JA No.			
3724	Impedance Matching to Self-Resonant Diodes	H. Berger R. J. Sasiela	IEEE Trans. Electron Devices ED-17, 942-943 (1970)

* Reprint available.

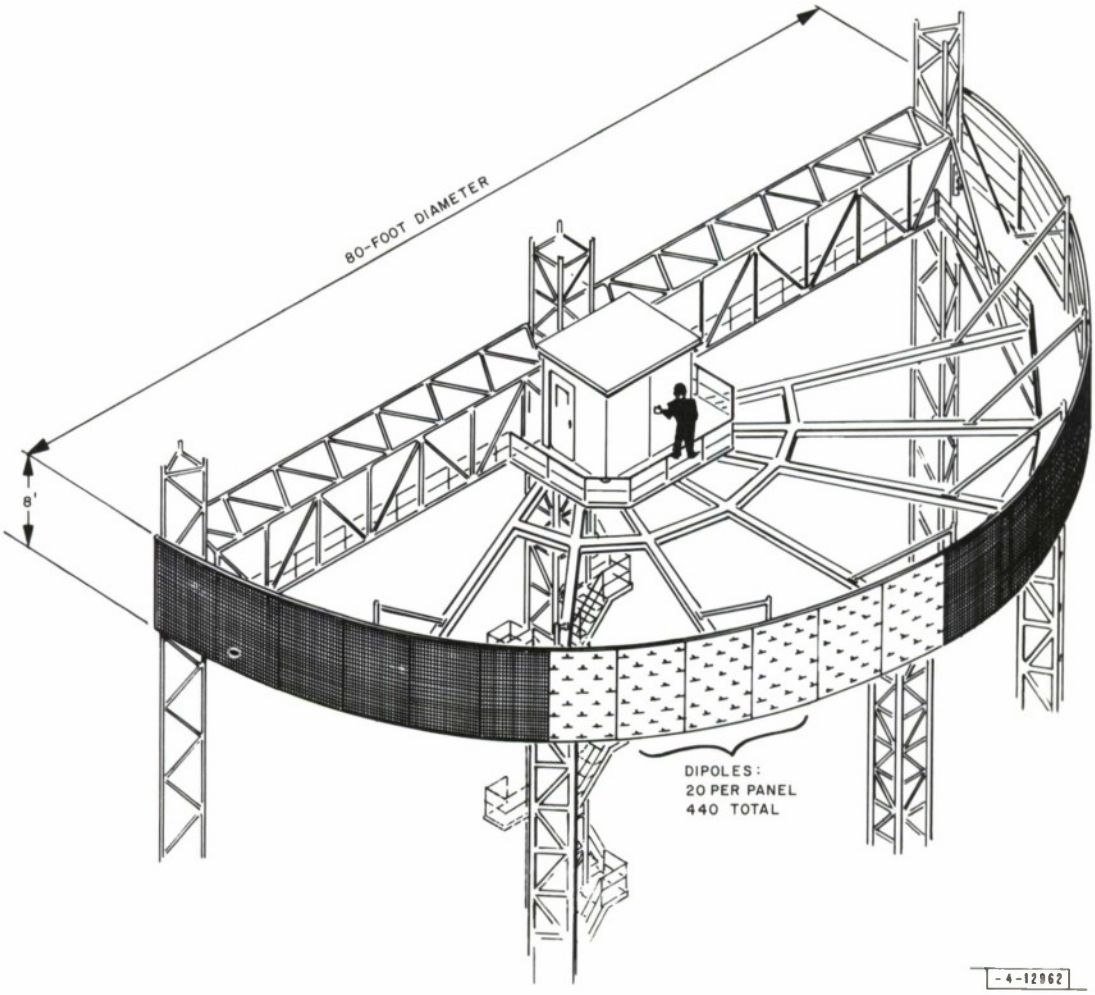

Ultrahigh frequency, steerable, cylindrical antenna array under construction at Lincoln Laboratory for Air Force/ARPA advanced radar. The concepts employed in this antenna are similar to those proposed for an improved ATCRBS interrogator system.

AIR TRAFFIC CONTROL

I. SUMMARY

The Lincoln Laboratory Air Traffic Control program continues to emphasize investigations leading to the development of an improved surveillance and communications capability which will more adequately support the needs of an automated air traffic control system. Recognizing both the long lead time involved in the implementation of major innovations and the evolutionary nature of the present system, our program seeks to develop and demonstrate both improvements to the existing air traffic control system and innovations for the future. The status of our activities to improve the existing sensors, to develop an advanced interrogator antenna, to characterize the beacon interference environment and to improve the processing of surveillance data are reported in Sec. II.

The simulation studies and system planning of an airborne traffic situation display which will provide pilots with a cathode-ray tube presentation of selected information from the Automated Radar Terminal System (ARTS) is continuing. The objective of this phase of the program is to determine whether an integrated presentation of the traffic situation and navigational data will permit pilots to operate more effectively in the terminal area. Operational research and simulation studies using a cockpit mock-up are employed to evaluate the effect of the situation display on terminal area procedures, safety, controller and air crew workload, and terminal area flow. While these studies are being pursued at the Electronic Systems Laboratory and the Aeronautical and Astronautical Department at MIT, the system configuration is being developed at Lincoln Laboratory. These activities are reported in Sec. III.

Assembly and laboratory checkout have been completed on a prototype model of a laser warning system which has been proposed to alert the tower controllers at Logan Airport of the presence of a ship with a tall mast in the shipping channel which crosses the approach path to Runway 4R. Funding support from the Massachusetts Port Authority for performing a series of tests which will evaluate the warning system at a convenient location in Boston Harbor is pending. The technical program is reported in Sec. IV.

II. BEACON SYSTEM DEVELOPMENT

A. ATCRBS Interrogator Antenna Upgrading

A major problem in the present ATCRBS results from the multipath propagation arising from the interception of the antenna beam by the earth. This multipath causes vertical lobing of the antenna pattern, with loss of coverage occurring in the resultant deep nulls. An obvious way of improving the situation is to provide an antenna beam which illuminates the earth less strongly. In the present reporting period methods of providing an improved interrogator response through use of the radar reflector to obtain a greater vertical aperture and reduce illumination of the ground were investigated.

Analytical design of a dual-frequency feed system suitable for incorporation into the ASR to form both the S-band radar and L-band interrogator beams has been completed. The new feed sketched in Fig. 1 will allow monopulse operation of the interrogator and should reduce vertical lobing when the interrogator site overlooks bodies of water or large flat areas. Implementation

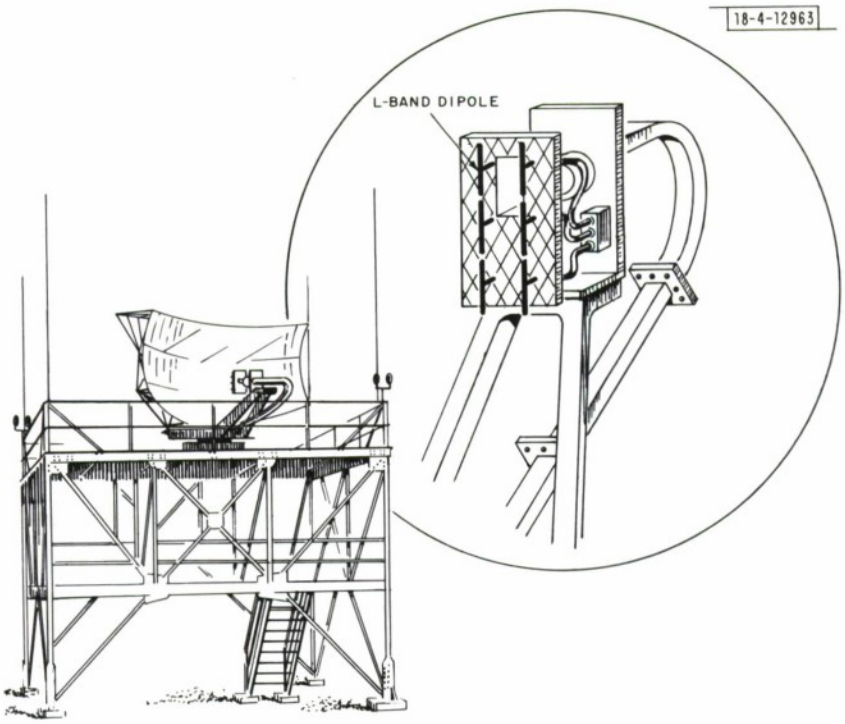

Fig. 1. A dual-frequency feed for the ASR antenna designed to support simultaneous operation as S-band radar and L-band beacon interrogator.

Fig. 2. Mobile test facility for measurement of transponder interference.

of the dual-frequency feed requires evaluation on an antenna pattern range and the development of a prototype modification kit.

The approach in designing a feed for the ARSR antenna which will handle both the L-band radar and interrogator is complicated by the close proximity of the radar and beacon frequencies. The present circular polarizer is not compatible with beacon operation so a different method of generating and switching the radar polarization must be used. Theoretically, it should be possible to develop a single primary horn feed which would be used for both the radar and the beacon, the beacon frequencies being introduced into the feed system through a diplexing filter.

Both the ASR and ARSR employ shaped reflectors which are designed to provide an approximate cosecant-squared antenna pattern. If the interrogator makes use of the radar reflectors in beam forming, the interrogator beam will also be approximately cosecant squared. The effects of the change of beam shape on system performance and operating doctrine is a topic for future study.

B. ATCRBS Interference Environment

The work reported in the past quarter has been continued and expanded in scope. Interference is one of several factors which influences the answers to the following questions:

(1) Can a discrete-address interrogator/transponder system operate on the same frequencies as the existing ATCRBS?

(2) What format should the signals of the discrete-address system have?

(3) What type of signal processing is required to detect and/or suppress the effects of interference?

(4) What type of monopulse is most attractive for the discrete-address system?

(5) Will the addition of a monopulse capability to the present interrogators provide significant improvement in performance of the present system?

1. Measurements in New York Area

Measurements were conducted at Floyd Bennett Field (Naval Air Station, New York) on 12-14 August 1970 utilizing equipment in a mobile test van (Fig. 2). A receiver centered at 1090 mHz and an omnidirectional antenna mounted 30 feet above the ground were used. The antenna was located well away from any structures which could prevent aircraft signals from reaching the receiver. Weather conditions were very good on all three days; a large high pressure area covered the eastern United States during the period. Consequently air traffic was probably typical of that encountered in the area on weekdays under very good weather conditions. The instrumentation counted and recorded the number of transponder replies received above a particular power threshold during each one-second time interval. Measurements were made for four power thresholds which were 6 dB apart. The thresholds were chosen such that the power received from a 500-W transmitter with an isotropic antenna would just equal the threshold if the transmitter were 46, 23, 12, and 6 nmi away. Typical results achieved are shown in Fig. 3. These results are useful in evaluating the effects of interference which enters a receiver through the sidelobes and backlobes of an interrogator antenna.

2. Analytical Model

We have developed an analytical approach to modeling the interference in realistic situations. The model can represent interference due to aircraft in the main, side, and back lobes

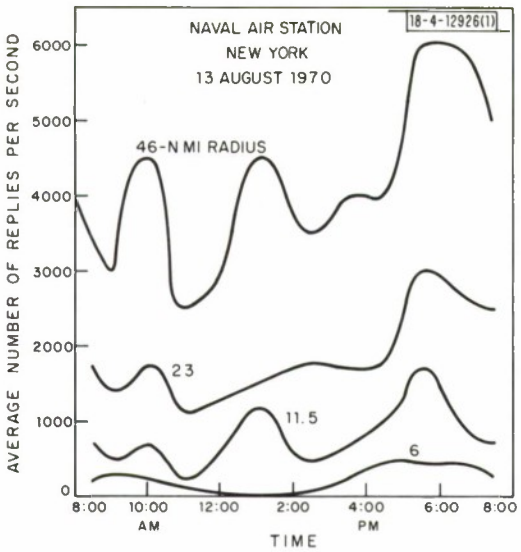

Fig. 3. Transponder replies received on on omnidirectional antenna located at site near J. F. Kennedy Airport.

of the interrogator antenna when they are interrogated by a large number of other interrogators. The model also gives the short-term structure of the interference by taking into account the peaking effect which is likely to occur when the interrogator is pointed in the direction of an unusually dense airspace. Equations have been derived which relate the probability that of N aircraft distributed within the interrogator beam k of them represent potential sources of interference to a downlink message, $k = 0, 1, 2, \ldots, N$. Implicit in these equations are the number, the locations and the beamwidths of the interrogators. The probability that a message will actually be interfered with can then be computed as a function of the length of the digital message. This will provide an extremely important input to the signal format studies.

At the present time the model equations are being programmed and analyzed results will be forthcoming in the next quarter. Further measurements, which will involve counting transponder replies over a time interval much shorter than one second, will be necessary to check the validity of the model. Our present instrumentation is capable of performing these measurements.

C. Advanced Interrogator Antennas

We have undertaken a study of appropriate configurations for advanced interrogator antennas, especially directed at designs suitable for a discrete-address interrogator system. Both rotating and electronically scanned antennas are being considered. Emphasis during this reporting period has been on the following aspects:

Monopulse techniques
Elevation beam-shaping methods
Multiple elevation beams and beam switching
Antenna pattern modification due to reflections from the ground.

In addition there are other topics bearing on system performance and needs which require study since they have impact on the choice of antenna configuration, such as

(1) The most desirable elevation pattern shape
(2) The effects of obstructions on the choice of antenna beam characteristics and the siting of the antenna
(3) The desirability of forming more than one elevation beam, either simultaneous beams or switchable beams.

A summary of the analysis of monopulse systems and the development of a computer program for studying beam lobing versus vertical aperture follows.

1. Off-Boresight Monopulse Analysis

The work reported in the previous quarter on off-boresight monopulse beacon operation has been extended to include, without approximation, nonlinear monopulse error curves with arbitrary nonlinearities. The analysis revealed the potential existence of an off-boresight minimum (within the 3-dB points of the sum beam) in the angular estimation accuracy (σ) which approaches zero under certain conditions. This observation must be supplemented by the comment that the theory makes use of certain approximations (which have been used in the prior literature) concerning the operation of conventional monopulse circuits (without the servo loop) which neglect quantities small compared to unity. These small quantities cannot be neglected when σ approaches zero and lead to a result perhaps an order of magnitude less than the on-boresight value, but not to zero. This material is being added to the report on off-boresight monopulse beacons in preparation.

A by-product of the off-boresight monopulse beacon studies for the search mode has been an investigation into the cause of the wide diversity of prior results for the optimum squint angle in monopulse trackers. The apparent discrepancies have been resolved and the results generalized to include the most realistic condition of nonzero mutual coupling between feeds.

2. Beam Lobing Versus Vertical Aperture

To reduce the time and labor in producing a variety of antenna coverage diagrams needed in studying the vertical aperture problem, a program has been written which produces computer generated diagrams with the curvilinear coordinates required in taking into account some of the effects of the earth's finite curvature. These have been used in a study of the problem of vertical lobing and for assessing quantitatively the improvements resulting from a series of incremental changes in the antenna. A report on this work is in preparation.

3. Multipath/Blockage Effects on Monopulse Performance

In conjunction with our work on interrogator antenna siting,* we are examining the effect of multipath and blockage on the performance of a monopulse system which measures azimuth angle of a transponder equipped aircraft. An obstruction in the main beam of the interrogator will affect the amplitude and phase of the signal received in both beams of the monopulse system. The resulting azimuth angle measurement error will depend on the differential effects between the two beams. In cases encountered in practice, blockage can cause azimuth errors which are a significant fraction of a beamwidth. Reflection multipath can also cause significant errors in a similar manner. A report which contains quantitative results for a number of realistic cases is being prepared.

D. Discrete-Address Interrogator Study

1. Introduction

One of the major recommendations of the Department of Transportation/Air Traffic Control Advisory Report (December 1969) was an evolutionary program to upgrade the basic ATCRBS

* Air Traffic Control Quarterly Technical Summary, Lincoln Laboratory, M.I.T. (15 August 1970), p. 6.

to provide increased reliability, accuracy, and traffic handling capacity necessitated by the anticipated growth of air traffic and automation of traffic control functions. The implementation of a discrete-address feature for aircraft transponders was recommended to allow individual transponders to be interrogated at selected times, thereby effectively combating the code garbling problem as aircraft densities increase. The basic discrete-address feature allows easy addition of digital data transmission from ground to air for Intermittent Positive Control (IPC) messages and other ATC clearances and advisories. The ATCRBS downlink already provides limited digital data transmission (discrete identity code and altitude), and the inclusion of extra information capacity for acknowledgments and other ATC messages presumably would be operationally attractive.

A special study group was formed during the past quarter to examine one of the core problems in implementing the discrete-address/data-link features: that of designing the signaling waveforms for both the up- and down-links of such a system. The major goal of this study is to provide the information necessary for evaluation of the technical and economic feasibility of several alternate signal formats for implementing these new transponder functions. The scope of the study will be broad enough to include investigation of modulation system performance in the interference and multipath environment, equipment compatibility with the ATCRBS transponders and interrogators, and system compatibility, i.e., the coexistence for a significant period of time of both the ATCRBS and the discrete-address beacon system. To further illustrate the scope of this study, some of the specific points to be examined are:

(a) The feasibility of operating the ATCRBS and the new discrete-address beacon system together in the same frequency bands;

(b) The feasibility of a decoder-display device which could be added to the standard beacon receiver to provide the discrete-address and limited up-link data transmissions;

(c) The necessity of changes in the technical specifications of ATCRBS transponders to insure coexistence in the same frequency bands;

(d) The design of signal waveforms and error control coding for ATC message authentication, to function with minimal interference with standard aircraft beacon equipment and multipath interference;

(e) The feasibility of designing a discrete-address system which can also be used to provide reliable and accurate airport surface surveillance with target identity and limited digital communications.

The so-called "superbeacon" (discrete-address/data-link) system signal format study is organized into four basic parts:

(1) Link requirements (determination of required communication reliability, surveillance accuracy, multipath environment)

(2) Interference and compatibility (the effects of the discrete-address system on ATCRBS functioning and vice versa)

(3) Evaluation of candidate signal formats (analysis of the effects of channel noise, multipath ATCRBS interference on various modulation and coding schemes)

(4) System analysis (evaluation of system capacity, reliability, cost and time to implement).

The first three parts of the study are presently under way and are aimed at providing reasonable models and alternatives for further detailed investigation in the systems analysis part of the study. It is anticipated that these three parts will be completed within the next calendar

quarter, after which the systems analysis task will commence. Further discussion of each of these tasks follows.

2. Link Requirements (Message Lengths and Reliabilities)

The present 12-bit discrete-identity code used by the ATCRBS will require a code assignment strategy to minimize code changes by pilots and controllers as traffic volume grows. Permanent assignment of a unique binary code to each aircraft in the future would require on the order of 20-bit addresses. Aircraft tail numbers could be encoded as six alphanumeric characters of 6 bits each. Discrete-address codes are thus bounded between 12 and 36 bits. ATC messages, altitude reporting and error control redundancy will probably result in a minimal message length between 25 and 50 bits. The systems analysis will be performed for assumed message lengths of 25, 50, 100 and 200 bits. The details of message content and discrete-address length will not be addressed until the sensitivity of the system performance has been analyzed for this set of message lengths.

The implementation of error correcting codes would allow reliable message transmission and decoding at higher bit error probabilities out of the demodulator but these decoders are complicated and expensive to implement. Error detection coding which required no errors in a received message block in order to correctly decode and print out a message would require bit error probabilities of the order of 10^{-3} to 10^{-4} to insure that retransmissions occurred less than about 10 percent of the time. This would correspond to the most stringent requirement on bit error probability for a discrete-address system.

3. Interference and Compatibility

The assumption that discrete-address interrogations and messages will be transmitted on the ATCRBS interrogation frequency raises an important interference question. These transmissions can result in (a) false triggering, (b) suppression of transponders, (c) garbling of interrogations, or (d) no interference with ATCRBS. Of these possible effects, triggering of a transponder is the most undesirable. Because of the variety of transponder designs and the absence of specifications on transponder behavior to arbitrary inputs, it is not always possible to predict with assurance the effect of a particular up-link signal on the population of standard transponders. The most straightforward implementation of the discrete-address interrogation is a binary address code which on-off modulates a train of standard ATCRBS interrogator pulses 0.8 μsec apart. The probabilities of triggering and suppressing ATCRBS transponders for this baseline format will be compared with the corresponding probabilities for other candidate modulation formats.

Another approach to the problem of sharing the up-link channel is to reduce the probability of triggering a transponder by intentionally suppressing it by transmitting decoy sidelobe interrogations. However, it may not be possible to decrease the false triggering probability to zero in this way because the transponder suppression interval has a very loose tolerance (35 ± 10 μsec) and may be short compared to an up-link message. Thus changes to the technical specifications and modifications to ATCRBS transponders may be needed to reduce false triggering probabilities to an acceptable level.

The assumption that discrete-address transmissions will use the ATCRBS frequency also raises equipment compatibility questions. To what extent can transponder components be used in common for ATCRBS and discrete-address functions and what is the minimum ATCRBS

upgrading required to achieve a given level of improved capacity and range accuracy? A detailed study and laboratory measurement of a representative group of commercial ATCRBS transponders is under way to find the answers to these questions.

4. Evaluation of Candidate Signal Formats

Selection of a particular signal format for the "superbeacons" must be made on the basis of many performance indices characterizing both the modulation-coding performance and the combined ATCRBS/superbeacon system performance. The modulation-coding performance will be characterized in terms of the following list of calculations, which will be made for each candidate format:

(a) Time and bandwidth occupancy of modulated signals,

(b) Probability of decoding errors in the presence of channel noise, multipath, and ATCRBS interference,

(c) Range estimation errors,

(d) Amplitude estimation errors (relevant to amplitude monopulse accuracy),

(e) RF phase estimation errors (relevant to phase comparison monopulse accuracy),

(f) Doppler estimation errors (relevant to possible use in air-to-air mode),

(g) Carrier phase acquisition time (for formats in which synchronous demodulation is considered).

The more promising formats will be thoroughly investigated.

E. Surveillance System Structure

1. Sensor Netting

Preliminary evaluation* of the tracking capabilities of the NAS EnRoute Stage A (Model 1) program has shown that highly reliable radar data will be required. In order to achieve the desired blip-scan ratios, Amato has suggested that NAS make more effective use of overlapping radar coverage, so that position reports from a more remote radar can be immediately used in the event of loss of data from the nearest radar. This is an elementary form of sensor netting, requiring the simultaneous availability of data from multiple sources and a consideration of the sensor registration problem, although the aim is chiefly to increase the data reliability.

With the increased implementation of 4096-code beacon transponders, the emphasis in tracking will shift away from the simple maintenance of identity toward the achievement of the greatest possible accuracy attainable from a given network of sensors. The position reports of all sensors on a given target will be used to update and smooth its track, with smoothing constants dependent on the expected accuracy of each report. In the case of a network of skin-tracking radars, one expects accuracy to vary sharply with target range (through the effect of range on signal-to-noise ratio), so that reports from the nearest radar will usually get much larger weight than all others. However, in the beacon system (ATCRBS), the range and bearing accuracies are nearly constant within the coverage area, and this can lead to quite different kinds of weighting, when these sensors are netted. For example, suppose that the beacon range accuracy is 0.2 nmi, while the bearing accuracy is 5 mrad (0.29°) over the coverage range of 200 nmi. Then the radial and tangential (angular) position accuracies become equal at a

* R.A. Amato, "C40/50 Radar Inputs and Tracking Operations, C50 Final Test Report," Technical Report 4415, MITRE Corporation, Bedford, Massachusetts (8 April 1970).

range of 40 nmi, and for more distant targets the range reported from a more distant interrogator may be used to enhance the tangential position accuracy by a factor of two or more. A crude analysis of this effect, using the actual geometry of the Jacksonville Center shows that in an area roughly half that of the Center, the tangential accuracy obtained in the present single-sensor mosaic could be more than doubled by using overlapping data.

Motivated by these and related considerations, we have initiated a modest program to study several aspects of the netting problem:

(a) A comparison of different procedures for combining data from multiple sources, using various models to represent the sensor accuracy and tracking procedures,

(b) A study of the registration problem, including an assessment of the adequacy of the simple model of registration errors used in NAS Stage A,

(c) An evaluation of the feasibility of netting the terminal and enroute radars to provide a common data base for all ATC operations.

2. Use of Improved Tracking Algorithms

The standard $\alpha - \beta$ tracker has been widely employed as the basic tracking algorithm for air traffic monitoring applications. The optimality properties of this tracking scheme depend upon the assumption that the aircraft follows a constant velocity straight-line trajectory. In the enroute phase of the flight, this simple model is most often adequate to describe the aircraft dynamics as the vehicle flies from one fix to another. However, there often arises special situations in which the aircraft dynamics can be described only by an acceleration model. For instance, the aircraft could be in the process of a turn, it could be "hunting" about a nominal ILS course in the process of a landing, or it could be experiencing random accelerations due to wind gusts. In these instances, it is necessary to adopt a slightly more complicated model for the aircraft dynamics, in which an acceleration component is added to the state vector. In this case, the acceleration state variable is driven by a colored Gaussian noise term whose correlation time is chosen to approximate the typical response time of the aircraft under track. The correlation function of this driving noise term is scaled by a maneuverability parameter whose magnitude is related to the type of maneuver being modeled. It is this parameter which provides the key to answering many interesting questions regarding the true state of the nature of the aircraft dynamics, when one is permitted to observe only raw surveillance data.

To elaborate on this point, we shall first consider the following example. An aircraft, traveling at 600 knots adhered to the following flight plan: 30-second straight-line motion, 90 seconds in a 1-deg/sec turn and 30 seconds in straight-line motion. Data were taken every second and were of such quality that the aircraft's position in x-y space could be established to within 500 feet in either direction. With the maneuverability parameter zero, the tracker (essentially an $\alpha - \beta$ tracker) lost track 10 seconds after the aircraft entered the turn. Increasing the maneuverability parameter extended the useful lifetime of the tracker, until finally a point was reached at which the tracker not only maintained track throughout the entire duration of the turn but, in addition, provided a 2-to-1 improvement in the position estimated and a 10-to-1 improvement in the velocity estimate.

We then retained this nonzero value of the maneuverability parameter and redesigned the flight path to represent a simple enroute straight-line path. In this case, this tracker, anticipating acceleration components which were not present, performed 2 to 1 poorer in its

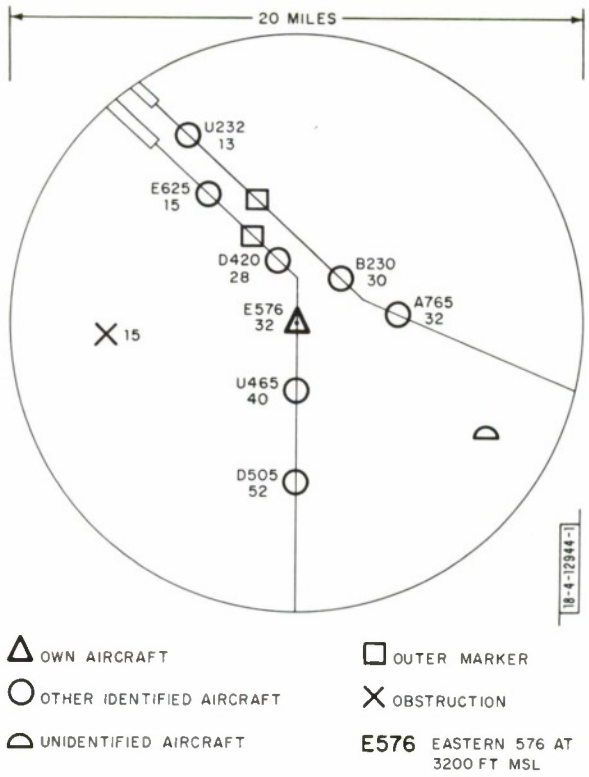

Fig. 4. Typical cockpit presentation produced by the airborne traffic situation display system (scale: 12-mile radius).

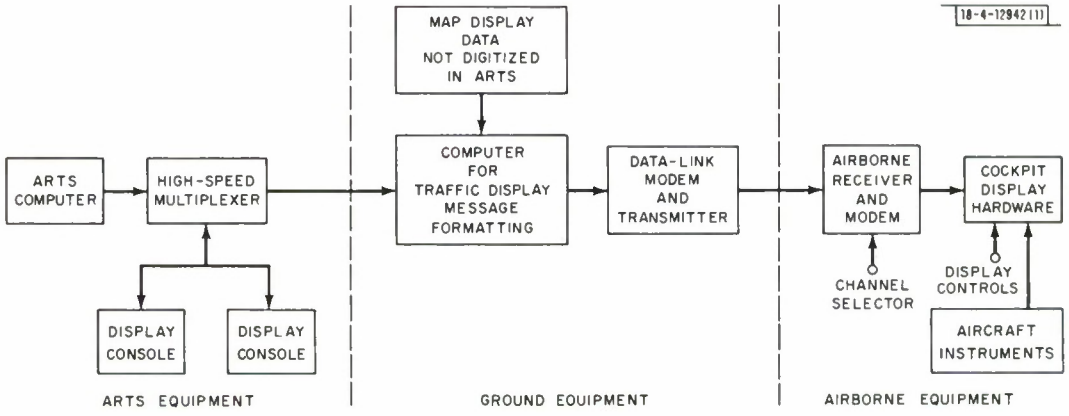

Fig. 5. Airborne traffic situation display system block diagram.

position estimate and 10 to 1 poorer in its estimate of velocity, as compared with the accuracy which could be obtained using the $\alpha - \beta$ tracker. From these results it becomes clear that, for this particular scenario, two tracking models should be used, the constant velocity model during the straight-line portion of the flight and an acceleration model while the aircraft is turning.

Since the ATC system does not have a priori knowledge of the precise instant of time at which the aircraft initiates its turn, nor the magnitude of the rate of turn parameter, the tracking computer does not know when to switch from one tracking model to another, nor does it know how large to make the maneuverability parameter. This suggests that at each data cycle a hypothesis test be performed in an attempt to determine which aircraft dynamical model best fits the sequence of the most recent data. Having then determined which tracking model to apply to the up-coming data, the tracker must still determine what value to assign to the maneuverability parameter, since the magnitude of the maneuver is not a priori knowledge. From recent results in the tracking literature it appears that this problem can also be resolved by implementing an adaptive tracking filter which continually up-dates an estimate of the maneuverability parameter to provide the best fit to the data.

Therefore, by better defining the various functions to which the tracker is to be applied, it appears that operating on the raw measurement data with statistical decision theoretical tests can lead to useful a posteriori estimates of the actual maneuvers being undertaken by the pilot.

Although we have focused only on the detection and tracking of an aircraft turn, there appear to be many other interesting ATC applications of this hybrid combination of detection and estimation theory. We shall investigate application of this concept in the analysis of many precision surveillance problems related to ATC such as CAS, ILS and beacon surveillance.

III. AIRBORNE TRAFFIC SITUATION DISPLAY

A program is in progress leading to the development of an Airborne Traffic Situation Display which will provide a pilot with selected information derived from the same Automated Radar Terminal System (ARTS) data base which feeds the controller's scope. The concept of relaying traffic information to the pilot has been attempted previously but without the benefit of having the data computer processed either on the ground or in the aircraft. Innovations in the surveillance field, such as the development of ARTS and the growing use of Mode C beacon reporting of altitude, have important implications in contemporary implementation of a situation display. As the ARTS commence operating in the next five years, it will be possible to restore to the pilot much of the data which he loses under IFR conditions. By employing the ground-derived surveillance data, displayed in the cockpit, for stationkeeping, the pilot will be able to maintain IFR traffic flow close to VFR levels. Figure 4 is a sketch of the cockpit display.

Work during the past quarter has been focused on a preliminary design and simulation studies.

A. Airborne Traffic Display-Design Studies

During this reporting period preliminary design studies of the proposed traffic display system were started at Lincoln Laboratory. The system is outlined in Fig. 5. It contains three equipment groups: (1) The ARTS components with which the proposed system will interface; (2) the ground-based equipment that will serve all aircraft, providing common traffic and map

information via data link; and (3) the airborne equipment in each aircraft, including data-link receiver, computer and display facilities. In addition to driving the display, the airborne computer will select from the stream of up-linked data only those items relating to traffic and map information in its vicinity. Preliminary calculations indicate that servicing the data requirements of this system would result in minimal loading of the ARTS. It also seems feasible that a voice channel would be sufficient for the data link.

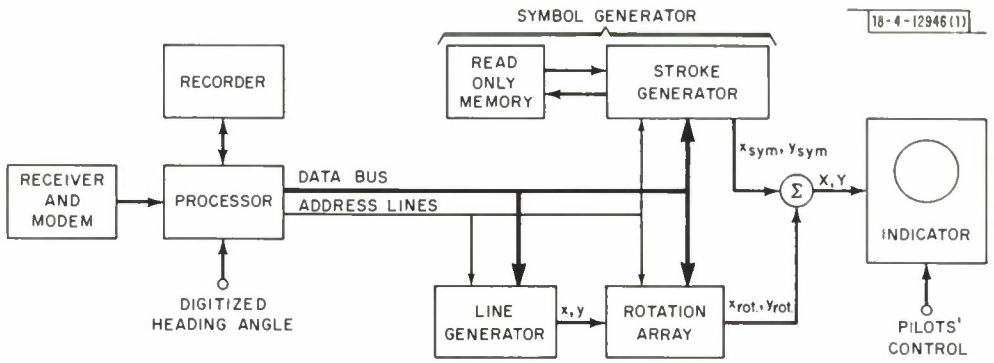

Fig. 6. Cockpit display hardware black diagram, experimental airborne traffic situation display system.

Work has also progressed toward defining the airborne portion of the system. Figure 6 is a block diagram of the airborne hardware for an experimental system which would be constructed to test the usefulness of the system in actual flight.

B. Display Simulation (Electronic Systems Laboratory, Flight Transportation Laboratory, Man-Vehicle Laboratory)

Two display systems are now running:

(1) A 707 simulation capable of constant altitude flight in the speed range of 250 to 600 knots. This model has the following display options:

Heading oriented (map rotates and translates)

North oriented (map translates)

Fixed map with moving aircraft position indicator

Other aircraft can be introduced with random positions and headings or in a unidirectional stream traveling at 350 knots.

Scale choice for full screen distance of 6 miles, 12 miles, 25 miles, or 50 miles.

(2) A display simulation system consisting of a simple linear aircraft model with map information to allow a 3-dimensional instrument approach to runway 4R at Logan Airport. To this has been added moving "buckets" which start at a holding fix about 20 miles from the airport and make a normal approach, flying a speed and heading profile which a controller might typically specify. These buckets are labeled and will eventually carry altitude and air-speed information.

Work is also in progress on modeling an accurate 3-dimensional transport of the 707 class to replace the simple 2D and 3D representations now in use.

C. Cockpit Simulator

A transport aircraft cockpit simulator was obtained, at no expense, from Boeing Aircraft Company and, after modification and installation at the Electronic Systems Laboratory, will be integrated with the display simulator. The cockpit mockup, including essential controls will allow evaluation of pilot performance under realistic pilot workloads when performing normal landing tasks while stationkeeping and merging.

IV. WARNING SYSTEM FOR RUNWAY 4R AT LOGAN AIRPORT

The proposed program for the evaluation of a laser-gate alerting system, for the detection of ships entering the approach zone at Logan Airport, is awaiting acceptance by the Massachusetts Port Authority. In the meantime, technical plans have been completed and a major portion of the required hardware has been developed, assembled and checked out.

The experimental program will utilize two laser beams across Boston Inner Harbor; one beam at 65 feet above mean sea level, and the second beam at 25 feet (msl). Automatic time-lapse photography will insure that no ships pass undetected during experimental periods. Interruption of either laser beam will trigger telescopic cameras on opposite sides of the harbor. Laser signal strength and equipment performance will be automatically recorded. From the radiometric, photometric and meterological data obtained in the experimental program, the feasibility of the laser-gate alerting system concept will be evaluated.

The first laser-gate system has been assembled, installed and tested on the Lincoln Laboratory roof. A demonstration of this initial system has been given to Massport and FAA representatives. Work continues on the second laser-gate system and on the photographic systems. Preparation of the Boston Harbor sites and initial field measurements await the approval of the program by the Massachusetts Port Authority. Preliminary studies of a future operational alerting system are under way. An artist's conception of such a system is shown in Fig. 7.

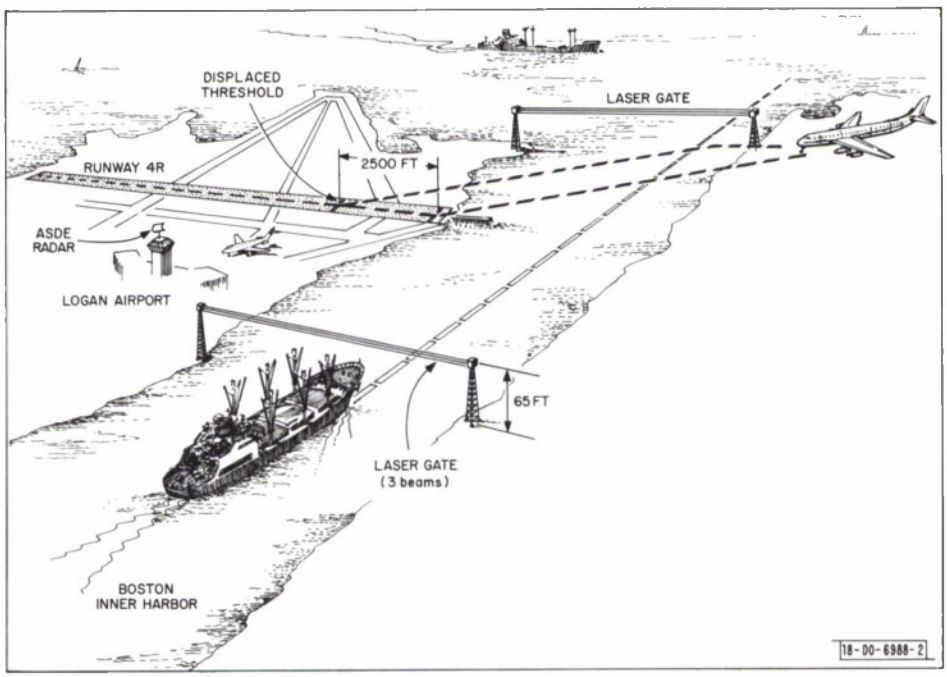

Fig. 7. A laser system for detecting shipping in approach zone at Logan airport.

DOCUMENT CONTROL DATA – R&D

(Security classification of title, body of abstract and indexing annotation must be entered when the overall report is classified)

1. ORIGINATING ACTIVITY *(Corporate author)* Lincoln Laboratory, M.I.T.	2a. REPORT SECURITY CLASSIFICATION Unclassified 2b. GROUP None
3. REPORT TITLE Air Traffic Control Quarterly Technical Summary	
4. DESCRIPTIVE NOTES *(Type of report and inclusive dates)* Quarterly Technical Summary, 1 August through 31 October 1970	
5. AUTHOR(S) *(Last name, first name, initial)* Weiss, Herbert G.	
6. REPORT DATE 15 November 1970	7a. TOTAL NO. OF PAGES 24 7b. NO. OF REFS 2
8a. CONTRACT OR GRANT NO. F19628-70-C-0230 b. PROJECT NO. 649L c. d.	9a. ORIGINATOR'S REPORT NUMBER(S) Air Traffic Control QTS 15 November 1970 9b. OTHER REPORT NO(S) *(Any other numbers that may be assigned this report)* ESD-TR-70-352
10. AVAILABILITY/LIMITATION NOTICES This document has been approved for public release and sale; its distribution is unlimited.	
11. SUPPLEMENTARY NOTES None	12. SPONSORING MILITARY ACTIVITY Air Force Systems Command, USAF

13. ABSTRACT

Major effort has continued on the development of improved surveillance and communication subsystems to meet the demands of the automated NAS/ARTS Air Traffic Control system. Field measurements of the beacon interference environment were completed and studies to upgrade sensor efficiency were intensified. Effort toward the development of a discrete address interrogator with a data link was concentrated upon the core problem of designing the signaling waveforms for both up and down links of the system. Particular attention is being given to system performance in the interference and multipath environment, as well as to system and equipment compatibility with ATCRBS.

The project to develop an airborne situation display of NAS/ARTS data has reached the stage for definition of an experimental system. The computer simulated cockpit display has evoked enthusiastic response from experienced pilots and traffic controllers. Preliminary work on the laser beam warning system for Logan Airport was completed with successful demonstration of the prototype hardware in the Laboratory.

Much of the development activity at the Laboratory in advanced electronic systems, radars, communication techniques, signal processing, computer applications, phased-array technology and satellites is directly applicable to ATC. While members of the Laboratory continue to express interest and participate in meetings on instrument landing systems, time-ordered navigation and communication techniques, data links, weather radar, and satellite applications, funding constraints have made it necessary to limit the work of the present program to a few specific tasks. Direct DOT or FAA support would permit the more effective application of the technology developed by the military to the ATC problem.

14. KEY WORDS

air traffic control
data acquisition
communications
discrete-address beacon transponder
Automated Radar Terminal System (ARTS)
Air Traffic Control Radar Beacon System (ATCRBS)