AD716751

Technical Note N-1127

FLAT DISC ACRYLIC PLASTIC WINDOWS FOR MAN-RATED HYPERBARIC CHAMBERS AT THE USN EXPERIMENTAL DIVING UNIT

By

J. D. Stachiw

November 1970

This document has been approved for public release and sale; its distribution is unlimited.

NAVAL CIVIL ENGINEERING LABORATORY
Port Hueneme, California 93041

DDC
RECEIVED
JAN 15 1971
C

Reproduced by
NATIONAL TECHNICAL
INFORMATION SERVICE
Springfield, Va. 22151

41

FLAT DISC ACRYLIC PLASTIC WINDOWS FOR MAN-RATED HYPERBARIC CHAMBERS AT THE USN EXPERIMENTAL DIVING UNIT

Technical Note N-1127

56-020

by

J. D. Stachiw

ABSTRACT

Flat disc acrylic plastic windows have been designed, fabricated, evaluated and delivered to EDU for replacement of glass windows used to date. The large (D_o = 6.950 inches; t = 1.650 inches) and the small (D_o = 4.450 inches, t = 1.040 inches) windows have been found on the basis of an extensive evaluation program to be more than adequate for man-rated service under 450 psi maximum operational pressure in steel flanges with D_i (diameter of opening in flange) of 5.000 and 3.000 inches. All windows were prooftested to 675 psi pressure at 120°F ambient temperature prior to delivery.

ACCESSION for
CFSTI WHITE SECTION ☑
DDC BUFF SECTION ☐
UNANNOUNCED ☐
JUSTIFICATION .....
BY .....
DISTRIBUTION/AVAILABILITY CODES
DIST. | AVAIL. and/or SPECIAL
1

This document has been approved for public release and sale; its distribution is unlimited.

INTRODUCTION

The Supervisor of Salvage, USN, requested the Naval Civil Engineering Laboratory to design, fabricate, evaluate and deliver flat disc acrylic plastic windows for replacement of glass windows currently utilized by the EDU (Experimental Diving Unit) at Washington, D. C. In view of the fact that the pressure vessels into which the windows were to be installed are man-rated, the windows also had to be subjected to a sufficiently exhaustive testing program that would justify man-rating them. This report is a brief summary of the systematic window and material testing program to which the acrylic plastic windows for the EDU chambers were subjected to insure their acceptability for man-rated service in a USN installation.

DISCUSSION

Since the main objective of an evaluation program for windows applicable to man-rated service is establishment of confidence in the installed windows, all the phases of the evaluation program had to contribute to the attainment of this objective. Thus, confidence had to be established in the design, material, fabrication, quality control and service life of such windows under stated operational conditions; 450 psi maximum pressure and 120°F ambient temperature.

Design

The design of the windows was based on the destructive short-term hydrostatic tests performed previously by NCEL in 75°F ambient environment on flat disc acrylic plastic windows.[1] Since the short-term loading conditions are distinctly different from long-term sustained or cyclic pressure tests, a conservative conversion factor had to be used in applying the short-term test data to the design of windows for the more severe sustained and cyclic pressure operational service conditions at 120°F temperature. The conversion factor chosen was 12, considered to be sufficiently large to take into account not only the difference in loading conditions (short-term vs. cyclic and long-term loading) but also the need for a safety margin of at least 300 percent.

Using the conversion factor of 12, the t/D_i (thickness to flange opening diameter ratio) was found* to be 0.325. This value gave the

*When the 450 psi operational pressure is multiplied by the conversion factor of 12, the result is 5400 psi. Using Figure 10 in NCEL Technical Report TR-527, one finds that a t/D_i (thickness to flange opening diameter) ratio of about 0.325 is required in order for windows to fail at 5500 psi under short-term loading conditions at 75°F.

proper design ratio between the window thickness and the unsupported diameter of the window. Because acrylic plastic plate stock varies in thickness from specified values, the actual t/D_i ratio of finished windows varies from the specified one (Figure 1). Since previous tests have shown that a 1.5 ratio between the flange opening and the outer window diameters is desirable the existing EDU window flanges (Figure 2) were checked for conformance. They were found to conform approximately to this ratio. It was found, however, that modification of the existing retaining ring (Figure 3) for the EDU chamber flange with the 7.000-inch diameter seat was required to accommodate the 1.650-inch thick acrylic plastic window. No further changes in the EDU window flanges were found to be necessary to accommodate the acrylic plastic windows chosen on the basis of 0.325 t/D_i ratio. The sealing arrangement consisting of flat rubber gaskets used previously with glass windows was retained unchanged for acrylic plastic windows.

Material Selection

Since the utility grade of acrylic plastic Plexiglas G (MIL-P-21105C) has been found in previous studies to be acceptable for man-rated windows under hydrostatic loading, it could be utilized for EDU windows without any further material selection tests. But if the fabricator of windows would rather supply an equivalent or better grade of acrylic plastic for the windows, it could be utilized also, providing the typical window performance evaluation tests were performed with windows fabricated from that material.

Because Swedlow Inc., the fabricator of the windows, indicated that he would rather use Swedlow 350 grade (MIL-P-8184) acrylic plastic, it was chosen for the EDU windows. The advertised mechanical properties of Swedlow 350 acrylic were approximately the same as of Plexiglas G acrylic. Therefore, no fear existed that it may not pass the NCEL specifications (Table 1) for man-rated acrylic plastic windows. The basic difference between Swedlow 350 and Plexiglas G was in the former's better resistance to (1) surface crazing when exposed to harmful chemicals, and (2) deformation at elevated temperatures. Since this difference between Swedlow 350 and Plexiglas G was to EDU's advantage, it was accepted as a desirable feature.

Material Quality Control

Material quality control was exercised by cutting test specimens from the center of the acrylic plastic plates serving as machining stock for the windows. Since the existing specification MIL-P-8184 covered the optical and physical properties of the Swedlow 350 material no need existed to repeat these tests on the plate in stock. Thus, only mechanical properties tests were run on the material test specimens cut from each acrylic plastic plate used as stock for machining of the windows. If the tests showed that the mechanical properties were lower than specified, the acrylic plastic plates from which the test specimens were taken

Table 1. Specified* Properties of Acrylic Plastic For Man-Rated Structures.

Physical Properties		
Property	Typical	Test Method
Hardness, Rockwell M	90	ASTM-D785-62
Hardness, Barcol	90	ASTM-D2583
Specific gravity	1.19 ± 0.01 (2 tests within 0.005)	ASTM-D792-64T
Refractive index; 1/8 inch	1.50 ± 0.01	ASTM-D542-50
Luminous transmittance; 1/8 inch	91%	ASTM-D1003-61
Haze, 1/8 inch	2.3	ASTM-D1003-61
Heat distortion temperature		
+3.6°F/min at 264 psi	200°F	
+3.6°F/min at 66 psi	220°F	
Thermal expansion/°F at 20°F	35×10^{-6}	Fed. Stan. 406 Method 2031
Water absorption; 1/8 inch		ASTM-D570-63T
(a) 25 hours at 73°F	0.3%	
(b) to saturation	1.9%	
Mechanical Properties		
Tensile strength, rupture (0.2 in./min)	9,000 psi (min)	ASTM-D638-64T
Tensile elongation, rupture	2% (min) - 7% (max)	ASTM-D638-64T
Modulus of elasticity, tension	400,000 psi (min)	ASTM-D638-64T
Compressive strength, (0.2 in./min)	15,000 psi (min)	ASTM-D695-63T
Modulus of elasticity, comp.	420,000 psi (min)	ASTM-D695-63T
Flexural strength, rupture	14,000 psi (min)	ASTM-D790-63
Shear strength, rupture	8,000 psi (min)	ASTM-D732-46
Impact strength, 1 zod (per inch of notch)	0.4 ft-lb (min)	ASTM-D256-56
Compressive deformation under load (4,000 psi at 122°F for 24 hours)	2% (max)	ASTM-D621-64

*Specification developed by NCEL for procurement of acrylic plastic plates to be utilized in the fabrication of man-rated pressure resistant windows and pressure hulls.

would be rejected, new plates would be selected from the warehouse, and the material quality control tests repeated.

The acrylic plastic plates chosen for the machining of EDU windows met (Table 2b) the NCEL specification for man-rated acrylic plastic windows and the plates were released for machining of windows.

Window Performance Evaluation

The aim of window performance evaluation tests was to establish the fact that the combination of window dimensions, window material and window flange chosen for EDU hyperbaric chambers is adequate for the service to which the windows are to be subjected. The evaluation tests chosen for a series of EDU windows selected at random from the lot of windows supplied by Swedlow Inc. were: (1) Short-term tests, (2) Long-term tests, and (3) Cyclic tests.

Short-term tests were identical to those performed previously[1] during exploratory evaluation of acrylic plastic flat disc windows. The objective of the short-term hydrostatic tests performed at this time was (1) to confirm the validity of the t/D_i vs p_c (where p_c denotes catastrophic failure pressure) curve for Swedlow 350 acrylic plastic established in previous NCEL tests with Plexiglas G acrylic plastic windows, and (2) to establish the effect of 120°F ambient temperature on p_c established previously at 70°F ambient temperature.

Long-term sustained hydrostatic tests had the objective of establishing that (1) the catastrophic failure of flat disc acrylic plastic windows under long-term sustained hydrostatic loading is predictable, and that (2) the window system chosen for EDU chambers is adequate to withstand any unforeseeable single sustained hydrostatic loading. Proving the first point would permit extrapolating into the future the results of few tests of less than a month's duration. Proving the second point would assure the operators of the hyperbaric chambers at EDU that even if the divers remained inside the chamber for a period of one year, the windows would not catastrophically fail due to visco-elastic creep.

Cyclic hydrostatic tests had the objective of (1) establishing that failure of flat disc acrylic plastic windows under cyclic pressure loading is predictable, and to (2) determine the cyclic fatigue life of the window system selected for EDU chambers. Proving the first point would permit extrapolating into the future the results of few tests of less than a month duration. Establishing the cyclic fatigue life of windows in EDU chambers would permit the chamber operators to establish a window replacement schedule with an adequate margin of safety.

Product Assurance

To assure that each window was indeed safe for operation under stated service conditions all windows were to be subjected for 1 hour to a 50 percent hydrostatic overload proof test at 120°F ambient temperature. After the test, each window was to be carefully inspected for

Table 2. Mechanical Properties of Acrylic Plastic* Plate Used for the Fabrication of EDU Windows.

Property Measured	Minimum	Average	Maximum
Compressive Yield, psi (ASTM D-695)	18,000	18,300	18,700
Compressive Modulus of Elasticity, psi (ASTM D-695)	4.8×10^5	5.4×10^5	6.2×10^5
Deformation Under Compressive Load, percent (ASTM D-621-64; 4000 psi at 122°F for 24 hrs)	0.36	0.51	0.63
Tensile Ultimate Strength, psi (ASTM D-638-64)	11,300	11,600	11,800
Tensile Modulus of Elasticity, psi (ASTM D-638-64)	4.5×10^5	4.7×10^5	4.9×10^5
Tensile Elongation at Failure, percent (ASTM D-638-64)	3.6	4.0	4.3
Flexure Strength, psi (ASTM D-790)	16,900	17,000	17,100
Flexure Modulus of Elasticity, psi (ASTM D-790)	4.9×10^5	4.96×10^5	5.0×10^5
Shear Strength, psi (ASTM D-732)	10,200	10,200	10,200

*Swedlow 350 acrylic plastic meeting MIL-P-8184 specification.

presence of cracks and packed for shipment. This final test just prior to delivery of the windows to EDU was intended to remove any remaining doubts about the quality and safety of the supplied windows.

EXPERIMENTAL TEST PROGRAM

Testing Arrangement

The experimental test program for evaluation of the chosen window design for EDU consisted of testing to destruction under hydrostatic pressure a series of EDU windows. While the type of loading differed from test to test depending on whether the tests were of short-term, long-term, or cyclic nature, the method of loading and the test arrangements were the same in every case (Figure 4).

The 9-inch diameter NCEL pressure vessels were used in every case for the containment of windows. The pressure was raised with positive displacement air operated pumps at 650 psi/minute rate. For long-term tests the desired pressure level was maintained inside the vessel by closing valves leading to the vessel. Only periodically were they opened to adjust the pressure if it deviated more than 50 psi from the desired pressure setting. During cyclic tests the sustained pressure was maintained for 7 hours followed by depressurization proceeding at a rate equal to the pressurization rate. The depressurization was followed always by a 17-hour long relaxation period. The overall 24-hour length of the cycle was patterned on a typical working day.

To eliminate as many extraneous variables as possible from the tests, the windows rested on a 0.025-inch thick nylon fiber reinforced gasket (DuPont's Fairprene 572A) and no retaining rings were used for clamping the windows inside the test flanges.* The sealing was accomplished by placing a bead of room temperature curing silicone rubber around the circumference of the window.

Test Specimens

Test specimens were windows selected at random from the lot supplied by the manufacturer for installation in the EDU test chamber complex. All of the tests except for 6 short-term tests were conducted for economy with the small (4.450 x 1.040 inches, t/D_i = 0.346) windows. The 6 short tests were conducted with the large windows (6.950 x 1.650 inches, t/D_i = 0.330) to determine whether there was a substantial difference between the strengths of the large and the small windows. Also for economy only one window was tested for each of the many chosen long-term and cyclic loading conditions making any subsequent statistical reliability analysis of data impossible.

*Clamping sometimes tends to strengthen the windows. Testing unclamped windows always produces conservative data.

Table 3. Catastrophic Failure of EDU Acrylic Plastic*
Windows Under Short-Term Hydrostatic Loading

Window Diameter D_o	Flange Opening D_i	Thickness t	Temperature	Failure Pressure psi
4.445 inches	3.000 inches	1.042 inches	32°F	7,420
6.957 inches	5.000 inches	1.645 inches	32°F	7,800
4.457 inches	3.000 inches	1.035 inches	54°F	8,100
6.948 inches	5.000 inches	1.640 inches	54°F	7,970
4.453 inches	3.000 inches	1.053 inches	76°F	7,000
6.959 inches	5.000 inches	1.635 inches	76°F	6,960
4.469 inches	3.000 inches	1.030 inches	98°F	7,550
6.950 inches	5.000 inches	1.650 inches	98°F	6,530
4.454 inches	3.000 inches	1.043 inches	120°F	7,000
6.960 inches	5.000 inches	1.630 inches	120°F	6,050

*Swedlow 350 acrylic plastic

NOTE: 1. All windows were pressurized at 650 psi/minute rate till catastrophic failure took place.

2. All windows were tested with 0.025-inch thick neoprene impregnated nylon cloth serving as the bearing gasket on the flange seat.

3. No retaining ring was used to restrain the window in the flange.

FINDINGS

The window evaluation study has conclusively shown that (1) the performance of windows is predictable, and that (2) the window system chosen is more than adequate for the 450 psi 120°F operational service in EDU chambers.

Both the large (t/D_i = 0.330) and the small (t/D_i = 0.346) windows chosen for the EDU chambers imploded (Table 3) under short-term hydrostatic loading at room temperature (70-75°F) in approximately the same pressure range (6900-7200 psi) as Plexiglas G windows tested in previous study (7000-8500 psi). This proved that Swedlow 350 acrylic plastic windows performed as well as Plexiglas G acrylic plastic on which the NCEL specifications for acrylic plastic windows were based.

The mode of failure for the windows tested at 120°F ambient pressure was found to be the same (Figures 5 and 6) as that for windows tested at 70°F ambient pressure (see NCEL Technical Report[1] R-527 Appendix B). First there formed a star shaped system of cracks propagating radially outward from the center of the window's low pressure face. The cracks were the deepest in the center of the window face. The depth of these cracks even at the center of the window face was less than the thickness of the window. Second, the leading edges of the cracks inside the body of the window curved towards the horizontal plane of the window coalescing in a single conical fracture plane. The apex of the cone was centered just below the center of the window's high pressure face. Third, a small hole was punched through the center of the window relieving the hydrostatic pressure inside the vessel.

Comparisons between the 7200 psi implosion pressure of small EDU windows at 76°F and 7000 psi implosion pressure at 120°F has shown that the effect of 120°F temperature on the short-term strength of EDU windows is insignificant. It was found, however, that the temperature appears to have some effect on crack initiation (Figure 7a). There appears to be some difference between the failure pressure of large and small EDU windows as could be predicted from the small difference in their t/D_i ratios. The EDU windows can withstand with confidence a momentary pressure loading of approximately 3600 psi without initiation of major cracks giving the windows a proven safety factor of about 8 under short-term overload (less than 1 minute duration). The displacements of the large EDU windows were larger than those of the small windows, but almost in direct proportion to the ratio of their t/D_i diameters (Figure 7b).

Long-Term Loading

The catastrophic failure of EDU windows has been found to be very predictable (Table 4). The relationship between implosion pressure and duration of a single sustained loading was found to be graphically expressable as a straight line on log-log coordinates (Figure 8) and thus easily to extrapolate into the future. The windows were found capable of withstanding a long-term pressure loading of at least 2250 psi without

Table 4. Catastrophic Failure of EDU Acrylic Plastic Windows Under Sustained Long-Term Hydrostatic Loading

Window Diameter inches (D_o)	Thickness inches (t)	Sustained Pressure psi	Duration of Loading minutes
4.453	1.039	7000	1
4.460	1.042	6000	1.7×10
4.454	1.042	5000	1.275×10^3
4.459	1.036	4500	4.5×10^3
4.460	1.034	4000	3.57×10^4
4.458	1.025	2000	1.02×10^5*

NOTE:

1. All windows were pressurized at 650 psi/minute rate till specified pressure was reached, this pressure was subsequently maintained till failure took place.
2. Ambient temperature for all tests was 120°F.
3. 0.025-inch thick neoprene impregnated cloth was used as the bearing gasket on the flange seat under the window.
4. No retaining ring was used to restrain the window in the flange.
5. *Test was terminated; no cracks were observed in the window.
6. The windows were fabricated from Swedlow 350 acrylic plastic.
7. The opening in the flange (D_i) was 3.000 inches in diameter.

catastrophic explosion failure giving the windows a proven safety factor of 5 under a single sustained long-term overload (approximately 10^{10} minutes duration).

The mode of failure under long-term loading was found to be similar to the mode of failure under short-term loading and thus will not be discussed here in any detail. There was, however, a significant difference in the magnitude of window deformation prior to catastrophic failure. While under short-term loading the maximum displacement of the 1.040-thick window's center just prior to failure was approximately 0.250 to 0.35[illegible] inches, for long-term loading the displacement was 0.400 to 0.500 inches (Figure 9). Surprisingly enough, the maximum displacement prior to catastrophic failure under long-term loading was the same regardless of the magnitude of sustained hydrostatic pressure loading. This substantially proves that the ultimate strength of acrylic windows is not a function of stress but of strain and that calculations of window failure under long-term loading based on stress alone are of little value.

Cyclic Loading

The catastrophic failure of EDU windows under cyclic pressure loading was found to be very predictable (Table 5). The mode of failure was similar to short-term and long-term loadings. The relationship between the implosion pressure and number of cycles could be graphically represented as a straight line on log log coordinates (Figure 10), and thus easy to extrapolate. The windows were found capable of withstanding more than 10^{10} cycles each (7 hours duration at 450 psi pressure) prior to requiring replacement due to catastrophic failure. How many cycles they will withstand at longer, or shorter than 7 hour cycle loadings is not quantitatively known. It is, however, qualitatively known from the NEMO experimental program[2] that if the duration of an individual fatigue cycle on acrylic plastic is less than 7 hours then the fatigue damage to the window for each cycle fatigue will be less, and if the duration of a cycle is longer, the fatigue damage accomplished by each cycle will be greater. But even if the duration of individual cycles was 100 hours, it is estimated that it still would take at least 1000 cycles to failure.

Proof Testing

All windows were proof tested (Figures 11 and 12) under 50 percent overload prior to shipment for installation at EDU. All windows withstood the 1-hour long proof test successfully without visual or photoelastic detectable permanent deformation or cracks.

CONCLUSIONS

The design, material, and fabrication method chosen for EDU windows have been found more than adequate for the service in man-rated hyperbaric chambers designed to operate under 450 psi maximum operational pressure and ambient temperature not to exceed 120°F.

Table 5. Catastrophic Failure of EDU Acrylic Plastic Windows Under Cyclic Pressure Loading

Window Diameter inches (D_o)	Thickness inches (t)	Peak Pressure (psi)	Number of Cycles at Failure
4.446	1.025	5500	1
4.430	1.027	5000	3
4.505	1.038	4500	9
4.460	1.024	4000	14
4.461	1.040	3500	120

NOTE:

1. Duration of a typical pressure cycle was 24 hours. The window was alternately 7 hours under sustained hydrostatic loading and 17 hours under zero pressure.
2. Ambient temperature for all tests was 120°F.
3. 0.025-inch thick neoprene impregnated cloth was used as the bearing gasket on the flange seat under the window.
4. No retaining ring was used to restrain the window in the flange.
5. The opening in the flange (D_i) was 3.000 inches in diameter.
6. The windows were fabricated from Swedlow 350 acrylic plastic.

RECOMMENDATIONS

The acrylic plastic windows supplied by NCEL to EDU should be periodically inspected for presence of cracks. Upon visual discovery of a crack in the window it should be replaced. If properly installed and cleaned only with cleaning solutions approved for acrylic plastic, the minimum crack-free life of the windows should be at least 1000 chamber pressurizations to 450 psi.

ACKNOWLEDGEMENT

The setting up of test equipment and supervision of tests was performed by Mr. K. O. Gray, General Engineer. His assistance in the accomplishment of the tests is appreciated.

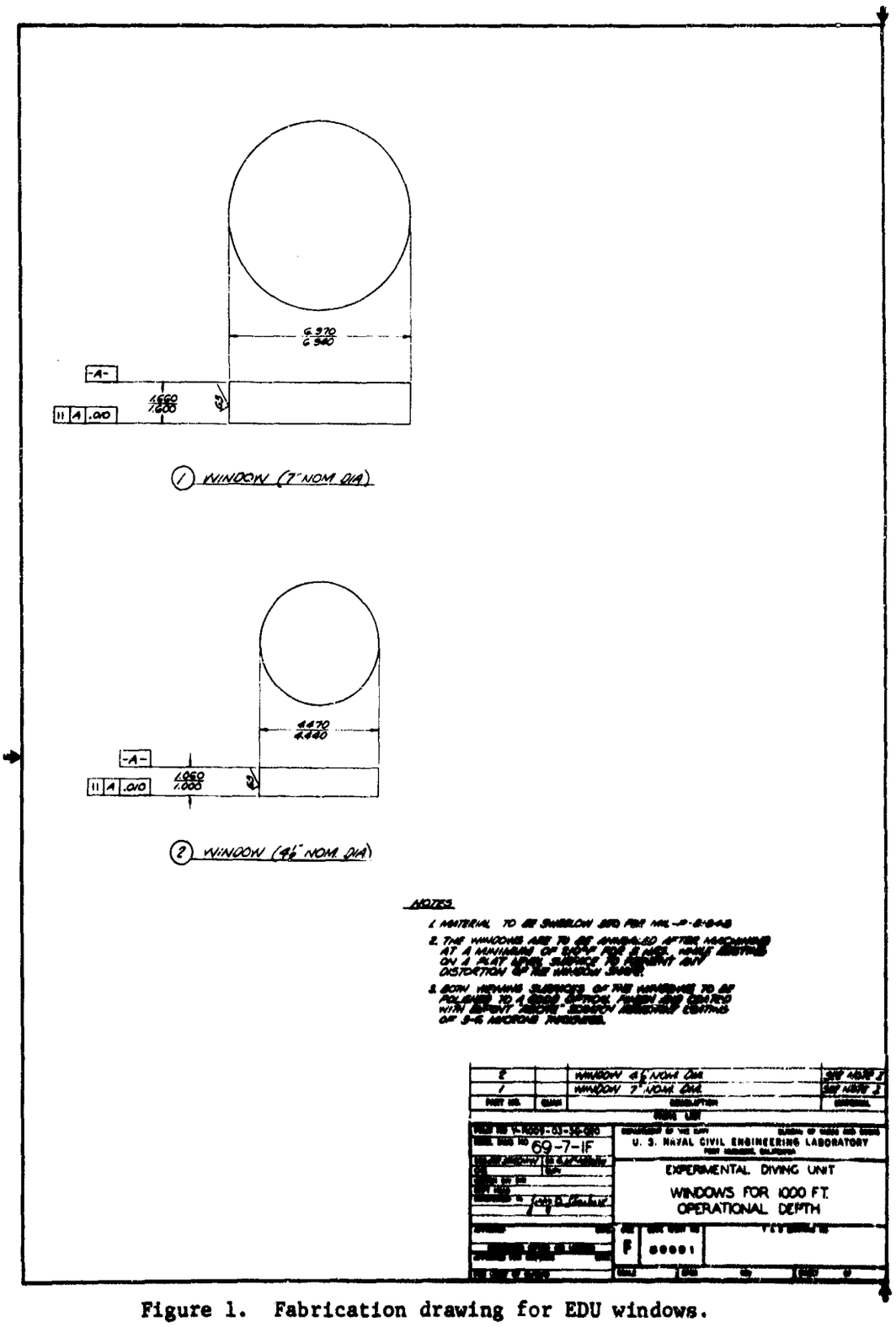

Figure 1. Fabrication drawing for EDU windows.

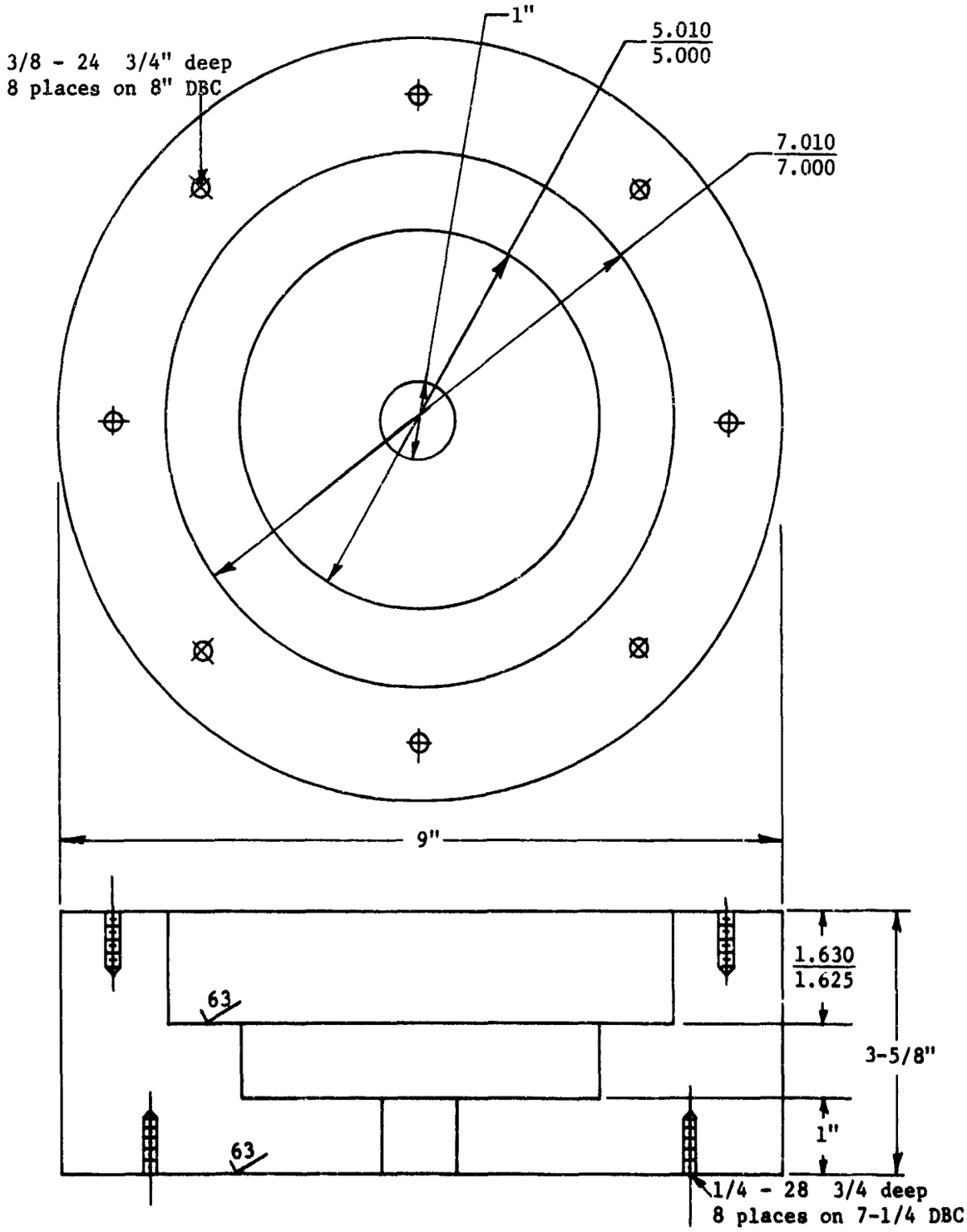

Figure 2a. Dimensions of window seat and opening diameter in the test flange for the 7-inch diameter EDU window, the seat and opening in the test flange are the same as in the EDU chamber window flanges.

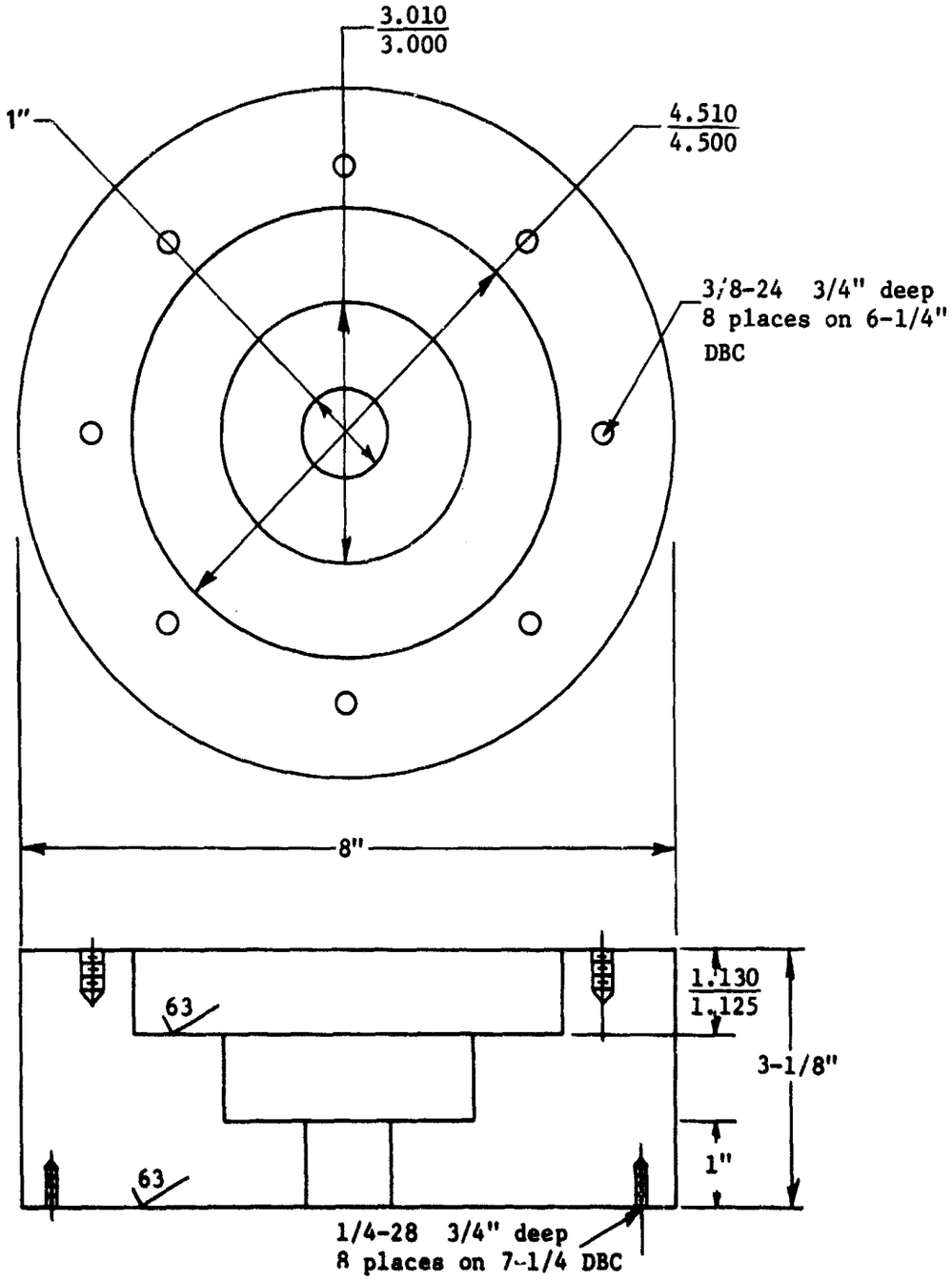

Figure 2b. Dimensions of window seat and opening diameter in the test flange for the 4.5-inch diameter EDU window; the seat and opening in the test flange are the same as in the EDU chamber window flanges.

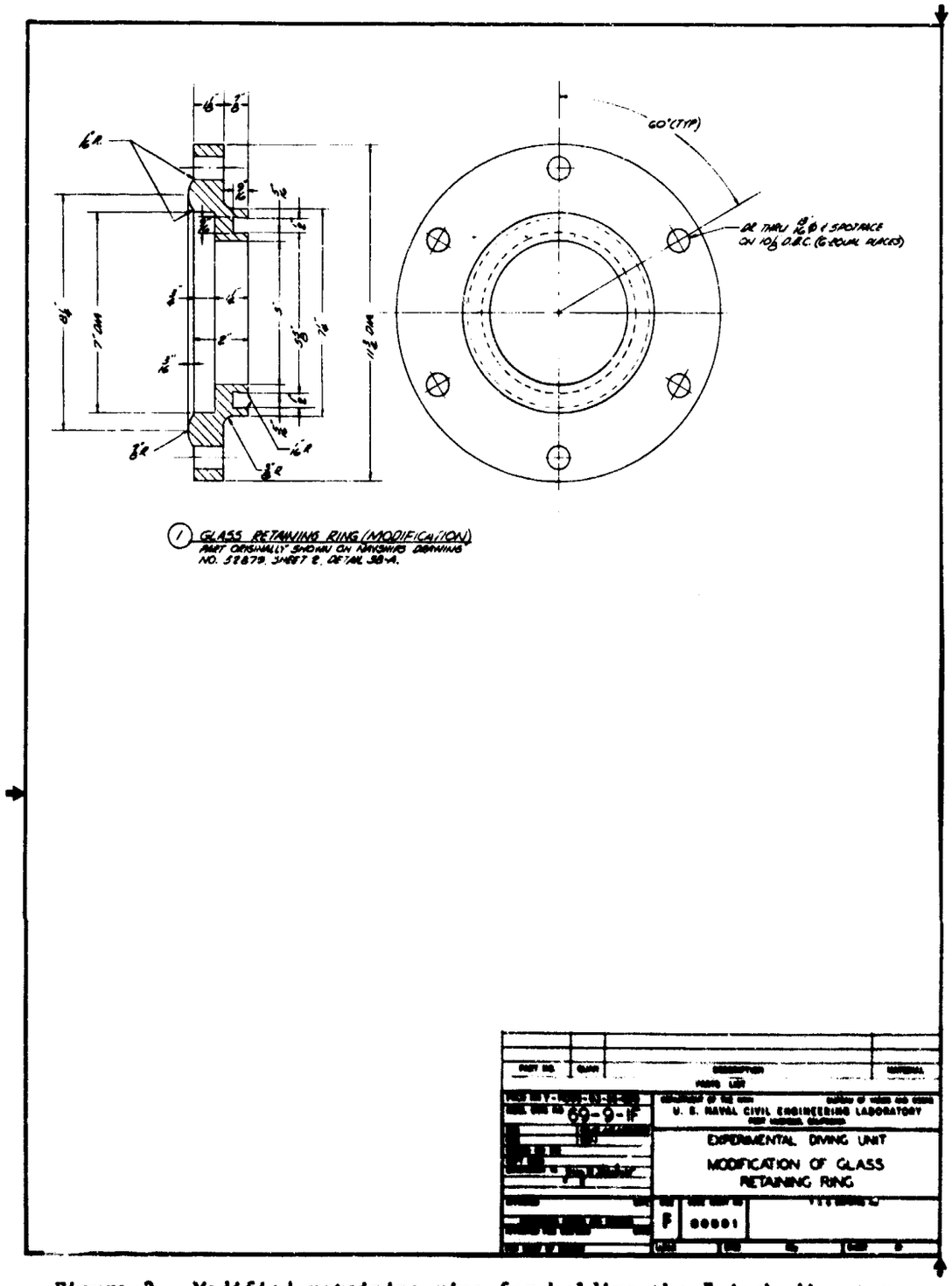

Figure 3. Modified retaining ring for holding the 7-inch diameter acrylic windows in EDU chamber flanges.

Figure 4a. Placement of window into the flange mounted on the pressure vessel end-closure.

Figure 4b. Placement of retaining ring and retaining ring bearing gasket on the window.

Figure 4c. Torq
the re

Figure 4d. Lowering the end-closure assembly into the pressure vessel.

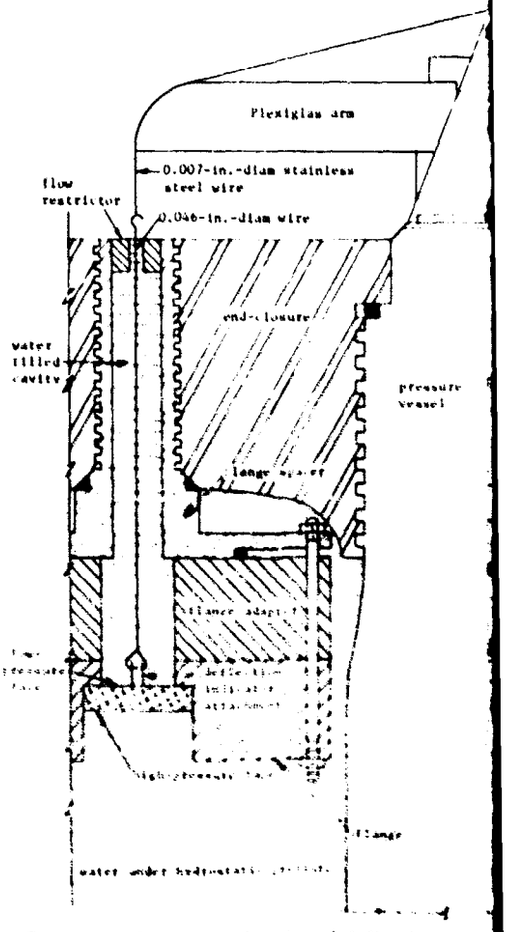

Figure 4e. Schematic drawing of deflection meas
flange mounting used in the testing of

ent of window into
nge mounted on the
e vessel end-closure.

Figure 4b. Placement of retaining ring and retaining ring bearing gasket on the window.

Figure 4c. Torqueing down the retaining ring.

the end-closure assembly into the pressure vessel.

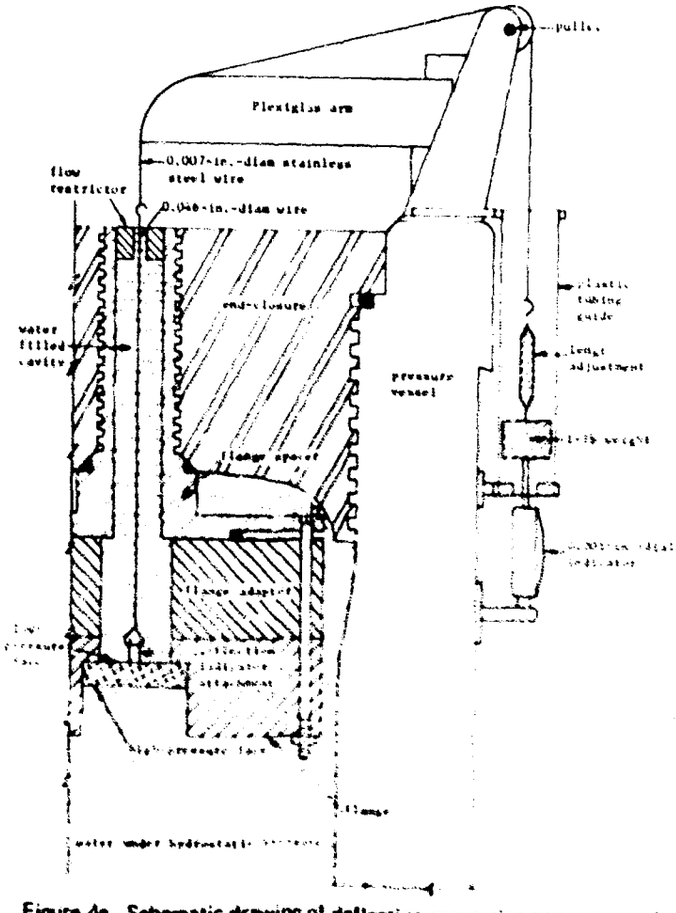

Figure 4e. Schematic drawing of deflection measuring apparatus and flange mounting used in the testing of windows.

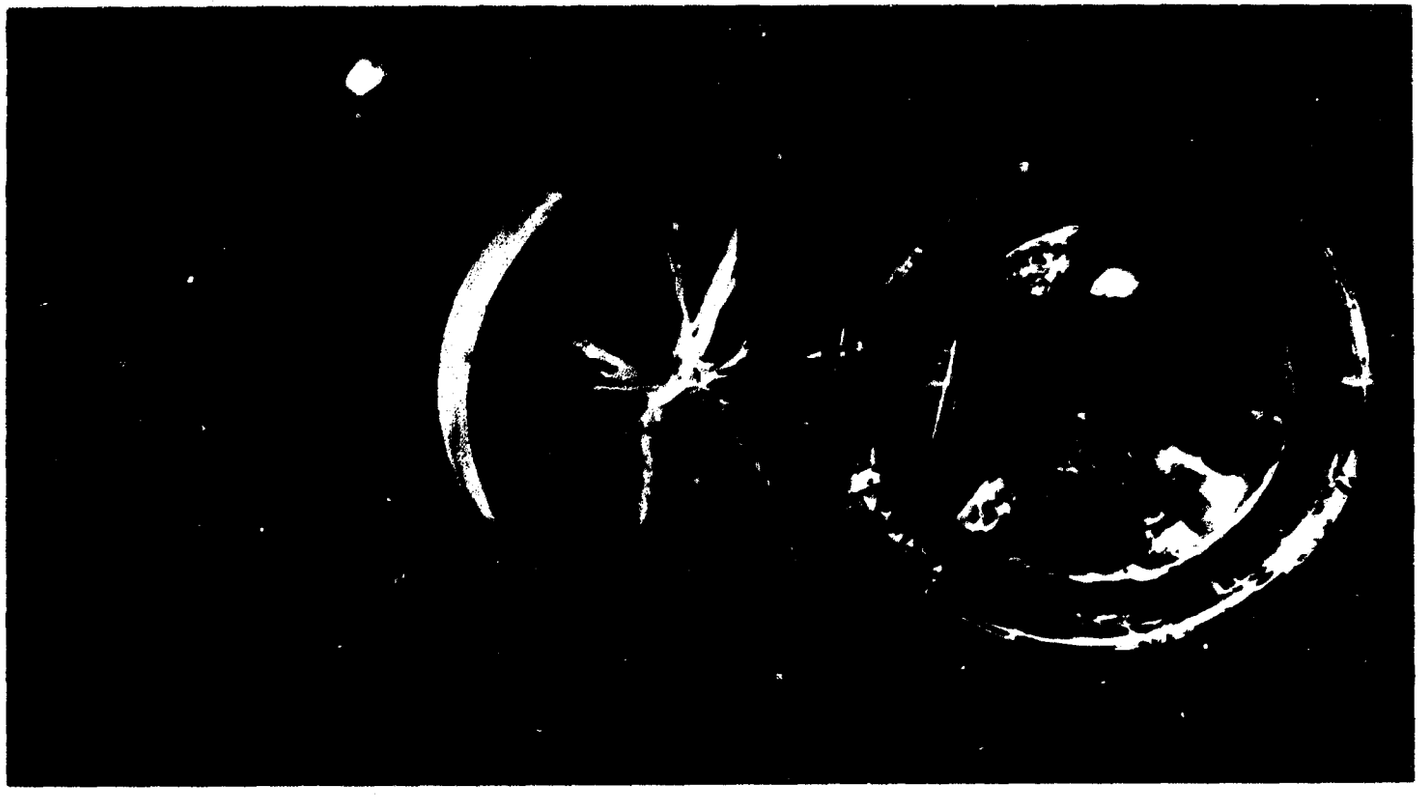

Figure 5. Three conditions of windows during their short-term testing to catastrophic failure; (1) Window under operational pressure of 450 psi, (2) Window under 800 percent overload of 4000 psi, (3) Window after 1400 percent overload of 6900 psi.

Figure 6a. High pressure face of a failed window; note the small opening through which the compressed water penetrated into the conical fracture cavity on the low pressure face of window.

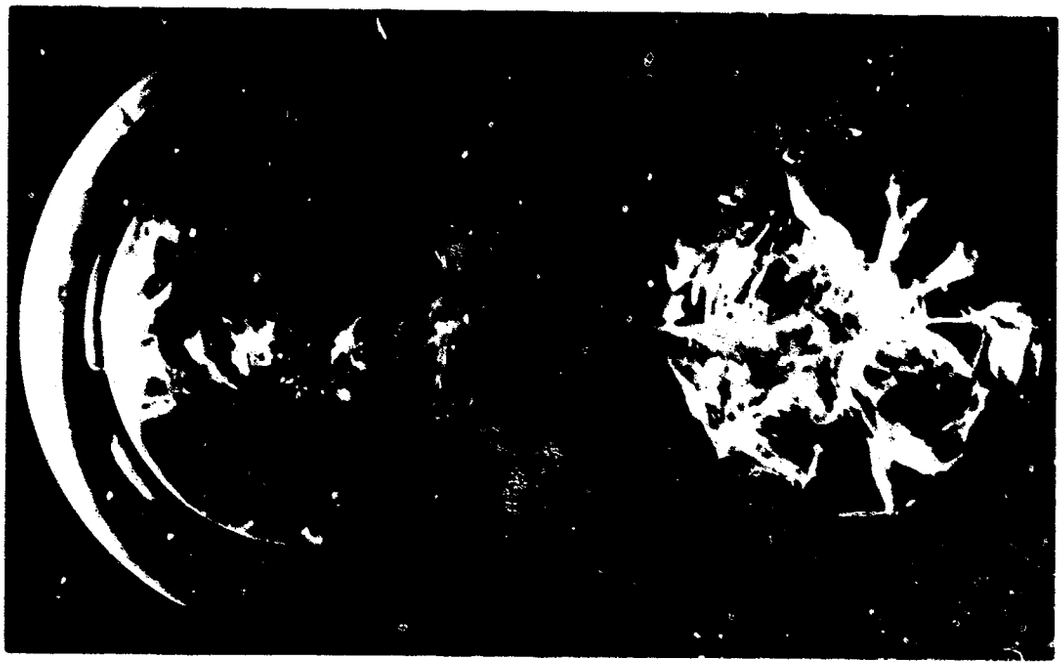

Figure 6b. Low pressure face of a failed window; note the conical fracture cavity from which the cone-shaped plug was ejected by the compressed water entering the cavity through the small hole at its apex.

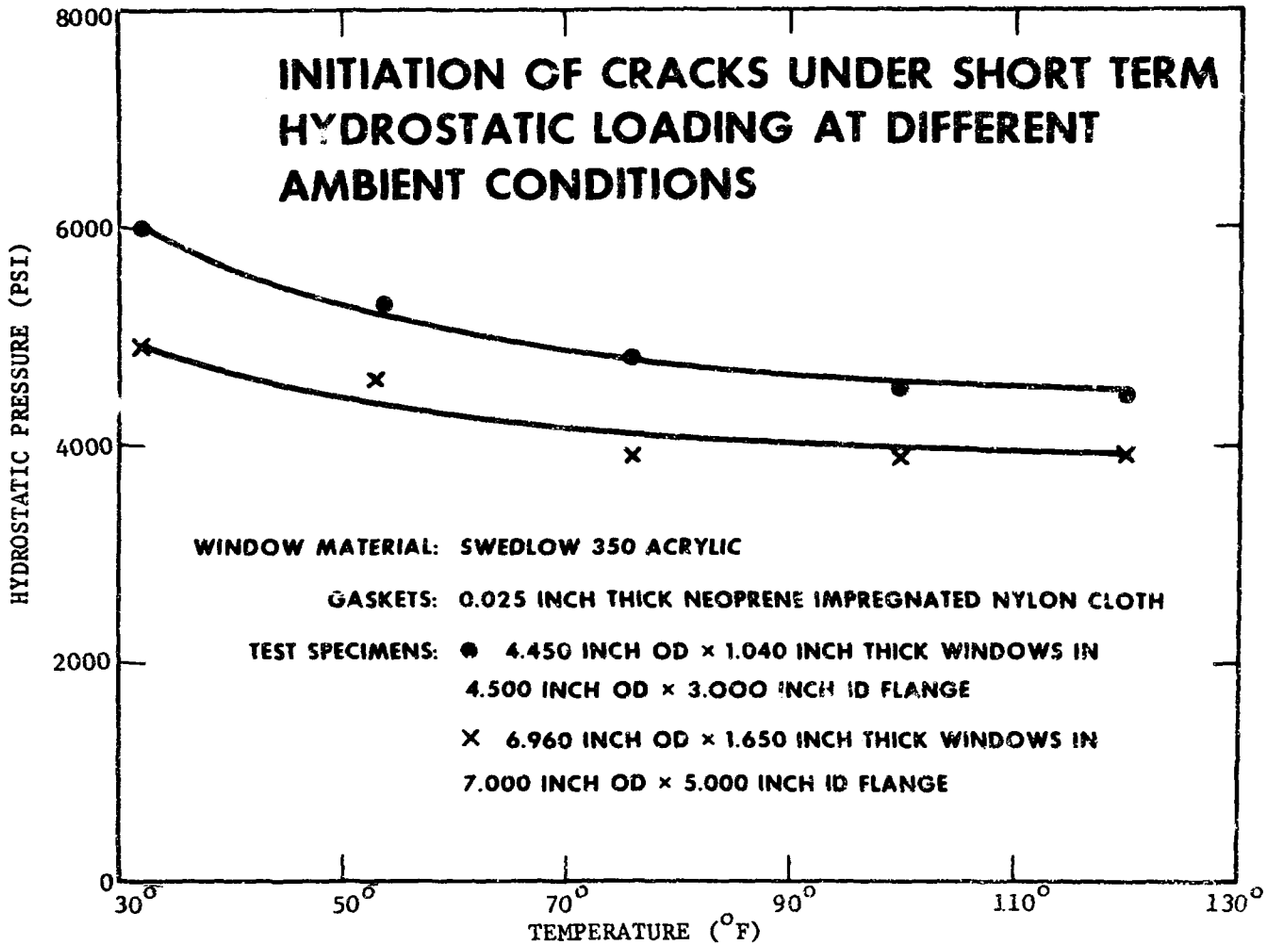

Figure 7a. Effect of temperature on the strength of EDU windows under short-term hydrostatic loading.

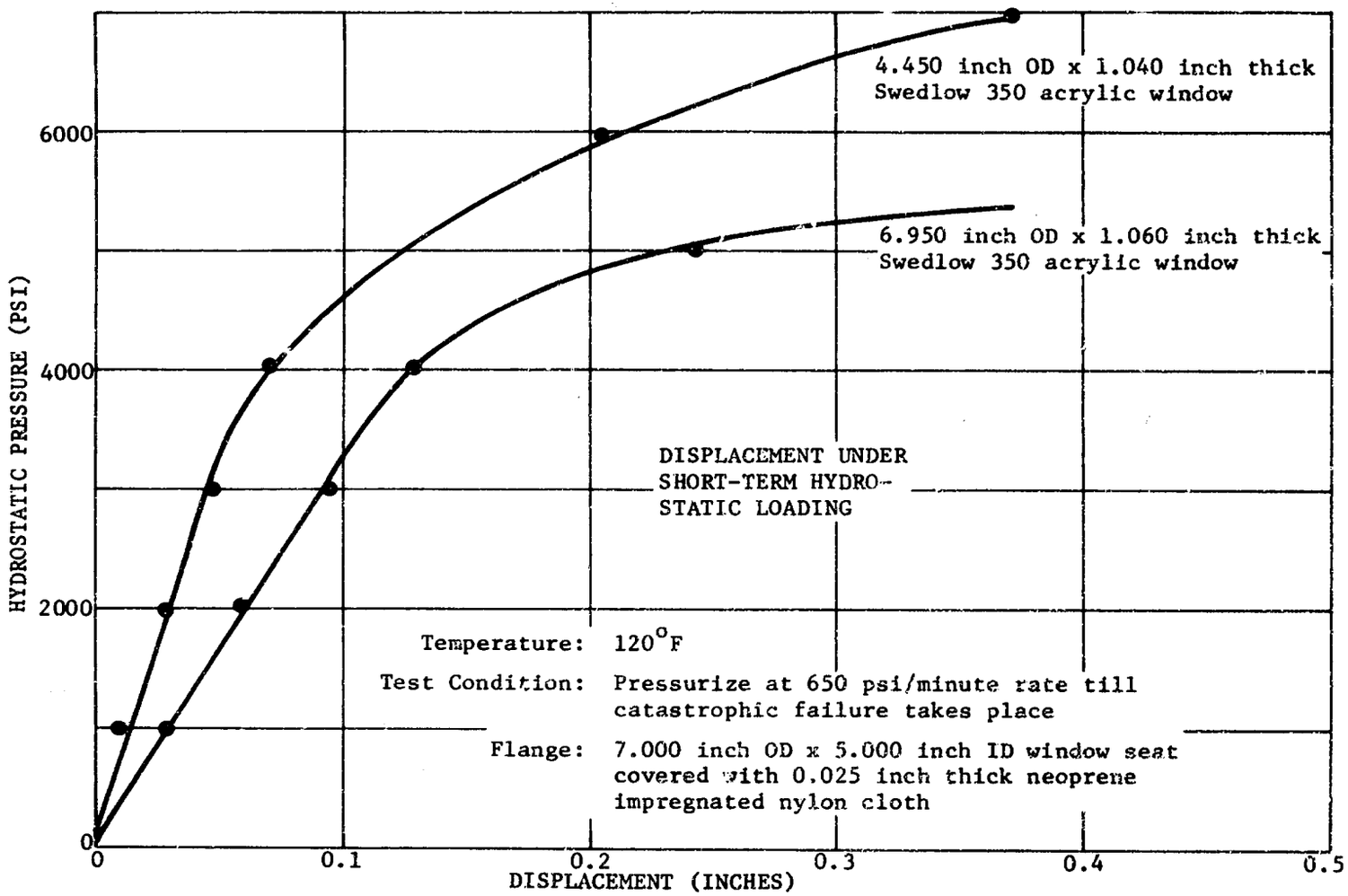

Figure 7b. Displacement of window's low pressure face center under short-term hydrostatic loading to catastrophic failure.

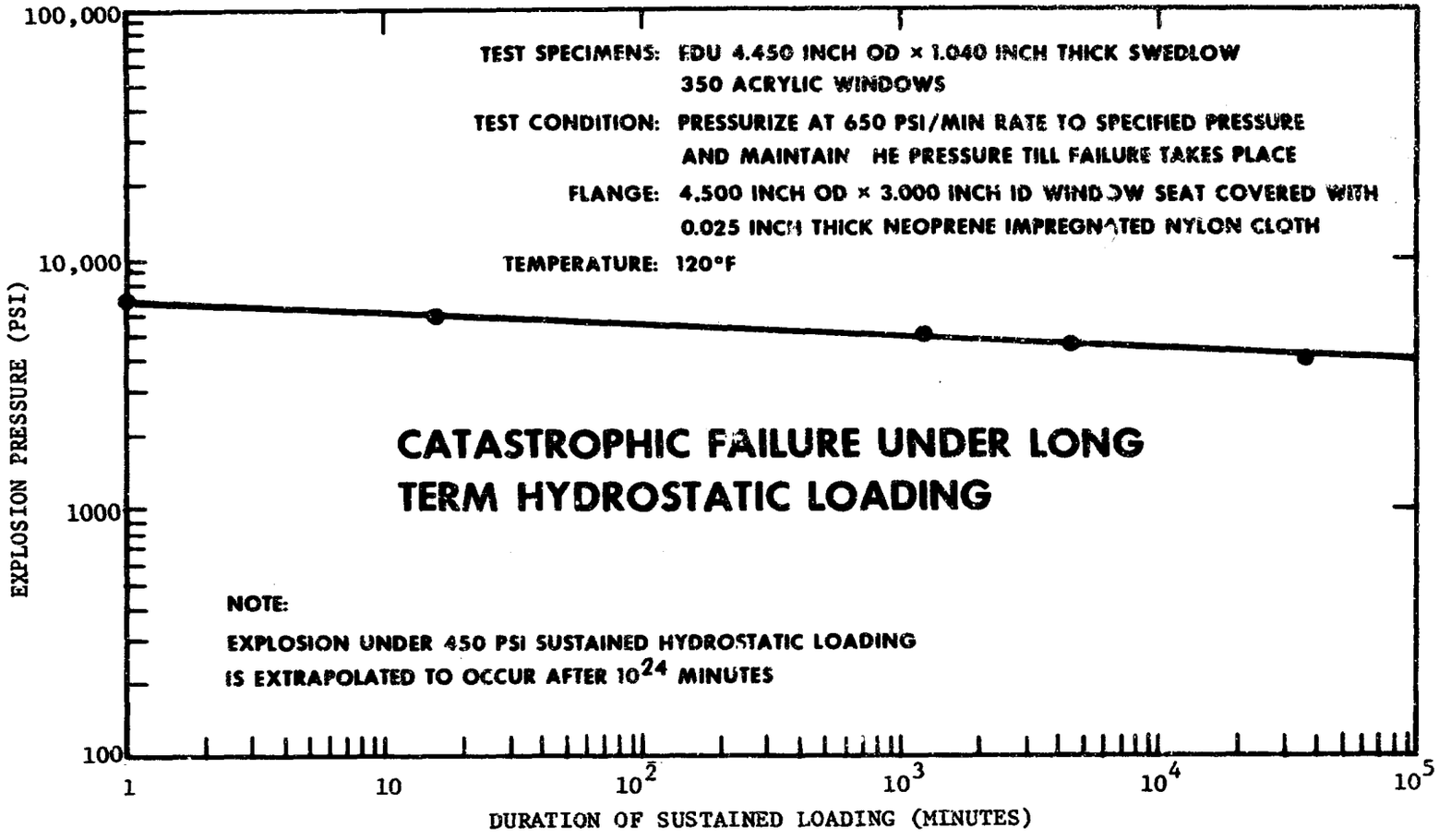

Figure 8. Effect of sustained loading on the catastrophic failure pressure of EDU 4.5-inch diameter windows.

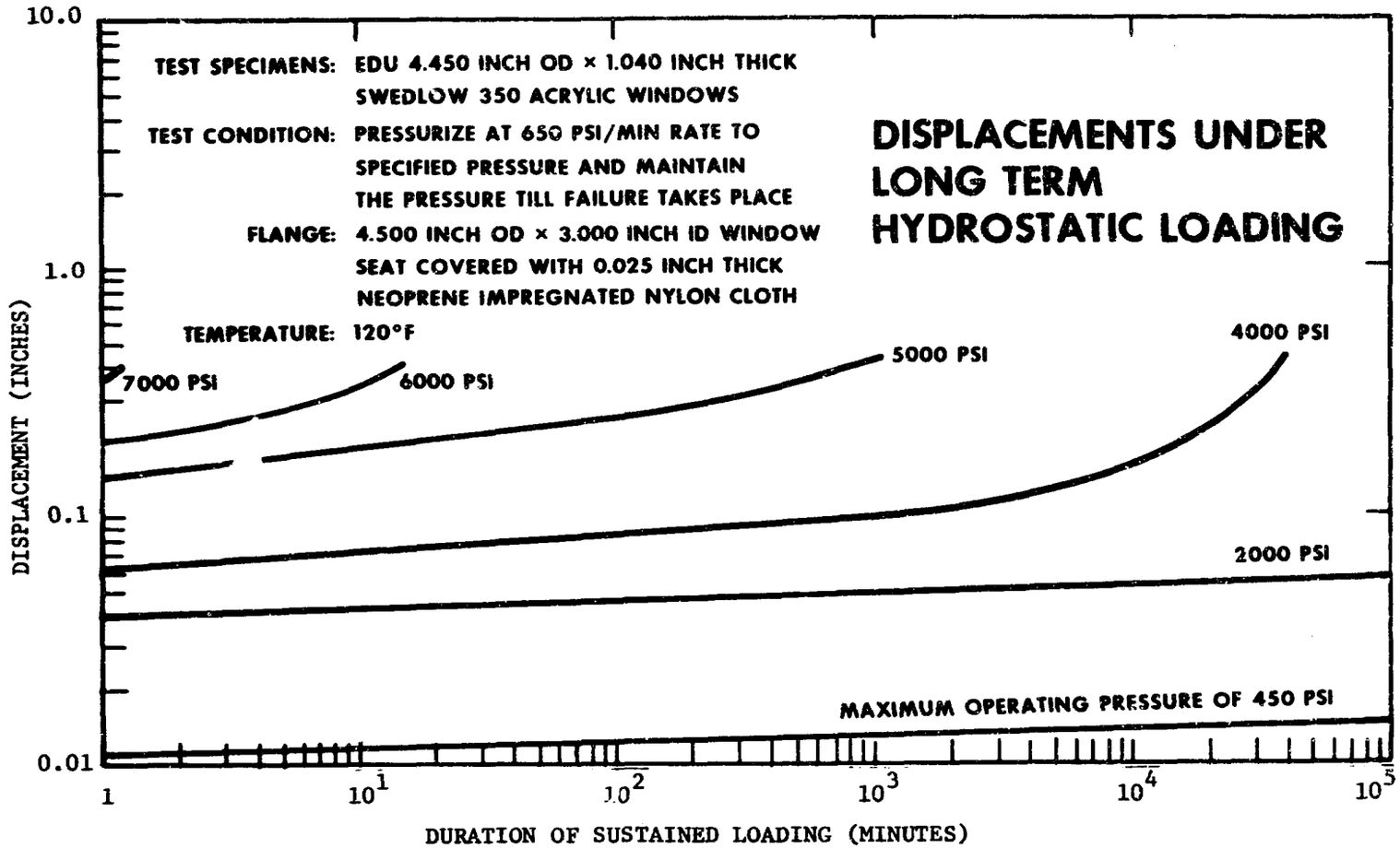

Figure 9. Displacements of window's low pressure face center under sustained hydrostatic loadings of different magnitudes; 4.5-inch diameter EDU windows.

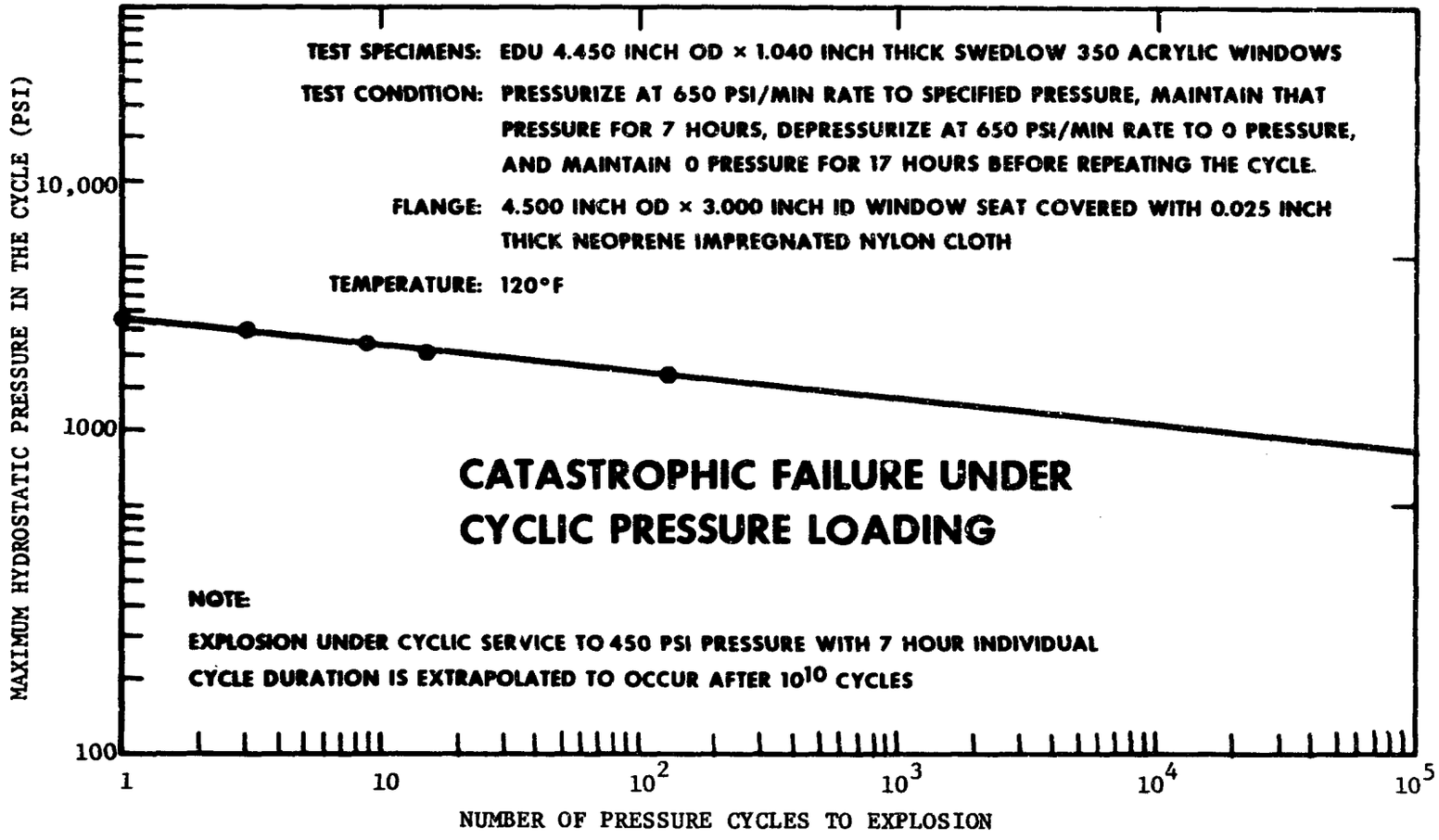

Figure 10. Effect of cyclic loading on the catastrophic failure pressure of EDU 4.5-inch diameter windows.

Figure 11. Arrangement for proof testing of EDU windows in NCEL's 72-inch diameter pressure vessel.

Figure 12. Flange for simultaneous proof testing of 20 EDU windows.

Appendix A

EFFECT OF IMPACT CRACKS ON ACRYLIC PLASTIC HYDROSPACE WINDOWS

The performance of flat disc acrylic plastic windows under short-term loading has been researched in sufficient detail[1] to establish accurately the implosion pressure of such windows. In these tests, considerable pains were taken to insure that no cracks or scratches were present in the windows prior to their implosion testing. Under operational conditions, however, it is very often impossible to prevent the generation of scratches or cracks in the surface of windows. In such cases, a real fear exists that the crack introduced initially into the high pressure face of the window by impact of an external object may serve as the source of catastrophic crack propagation failure at lesser hydrostatic pressures than the window is rated.

For this reason, an exploratory study was conducted. As test specimens four flat disc acrylic plastic windows were used of 6-inch diameter and approximately 1¼-inch thickness (Figure A-1). Two of the windows were of monolithic construction, having been machined from 1.250 thick Plexiglas "G" plate. The other two windows were of laminated construction. The inner layer of the laminated window was 31/32 of an inch thick Plexiglas "G", the outer layer was 7/32 of an inch thick Plexiglas "G", while the layer bonding together the inner and the outer acrylic sheets was cast-in-place Swedlow SS-3330M of 3/32 of an inch thickness. One each of the monolithic and laminated windows were impacted in air with a bullet (.22 caliber long rifle Super X), fired from a distance 6 feet from the window. The other two windows were left untouched for comparison. The laminated window developed a star shaped crack that penetrated only the outer 7/32-inch thick layer, (Figure A-2), while the monolithic window was penetrated by a family of cracks 22/32 of an inch deep (Figure A-3).

All four windows were subjected to hydrostatic pressure in a typical flat window flange with a clear opening of 4 inches, and a 0.005-inch radial clearance between the edge of the window and the flange. The laminated windows were tested with the thin outer acrylic plastic layer serving as the high pressure face, while the fractured monolithic window was placed to have the cracked surface serve as the high pressure face. In this manner, both cracked windows were tested with the cracked surface acting as the high pressure face. Testing of all windows was conducted at 650 psi/min pressurization rate in 68-69°F temperature range.

The windows failed at the following pressures:

Laminated window, no impact crack	= 5500 psi
Laminated window, with impact crack	= 5100 psi
Monolithic window, no impact crack	= 6560 psi
Monolithic window, with impact crack	= 6400 psi

All failed windows exhibited a cone shaped failure surface, with the apex of the cone being located just below the center of the high pressure face of the window. Very little difference was observed between the fracture patterns in the windows with impact cracks and those without (Figure A-4). The comparison of implosion pressures shows that no significant decrease in the window's critical pressure occurred due to the presence of cracks generated prior to pressurization by impact of rifle bullets on the high pressure face. Also the implosion pressures of laminated windows were somewhat lower than those of monolithic windows.

Several tentative conclusions can be drawn from this data. First, a crack on the high pressure face of an acrylic window does not necessarily lead to a catastrophic failure by rapid crack propagation at lesser pressures than the critical pressure of a window without such a crack. Such a crack, however, must not penetrate more than 50 percent of the window thickness and must be located in the center of the window. Second, in view of the fact that the operational pressure rating of an acrylic window generally is only about 1/10 to 1/12 of its critical pressure under short-term loading, no danger exists if the window with cracked high pressure face is inadvertedly subjected only once to its operational depth. Third, a laminated window with a soft bonding layer does not possess as high a critical pressure as a monolithic window of identical diameter and thickness. Fourth, a laminated window with an impact crack on the high pressure face does not possess a higher critical pressure than a monolithic window with an impact crack.

Although it is understood that those conclusions apply directly only to specimens tested under short-term loading, they also apply, in all probability, to flat disc windows of different proportions, as well as to conical windows. It must be emphasized, however, that the above conclusions apply only to cracks on the high pressure face of the window. What the behavior of windows with impact cracks on the low pressure face is has not yet been explored in any detail.

Still, regardless of the encouraging results from this very brief study all impact cracks should be avoided on either the high or the low pressure faces of the window. If cracks do occur, the window should be replaced immediately.

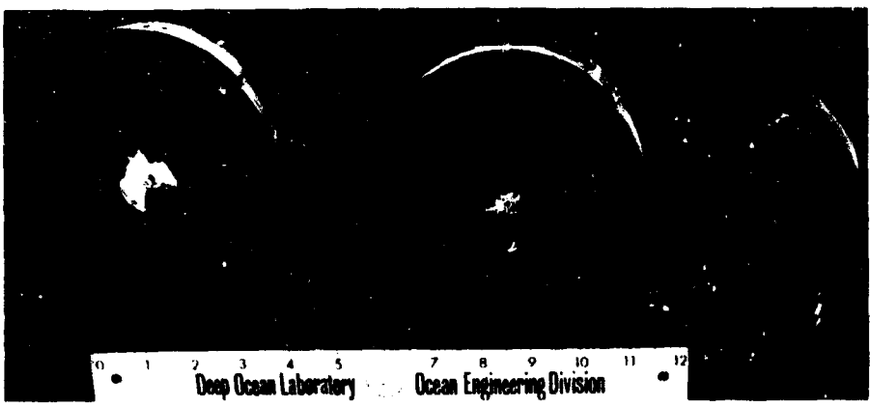

Figure A-1. Flat acrylic disc windows prior to implosion testing. The impacted window on the left is monolithic, while the impacted window on the right is of laminated construction.

Figure A-2. Impacted laminated window prior to hydrostatic testing.

Figure A-3. Impacted monolithic window prior to hydrostatic testing.

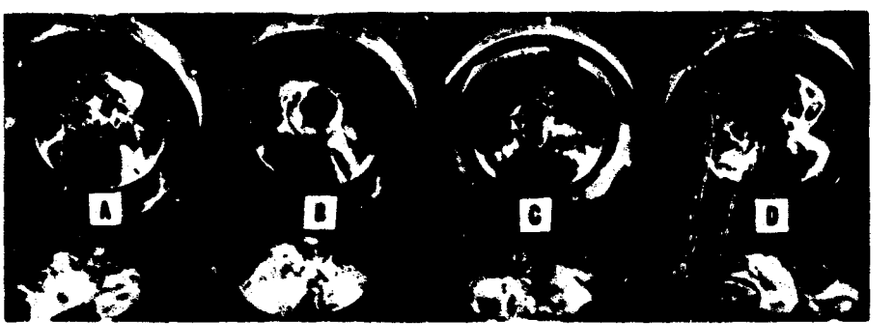

Figure A-4. Flat acrylic disc windows after implosion testing; low pressure faces.
A – non-impacted laminated window
B – impacted laminated window
C – non-impacted monolithic window
D – impacted monolithic window

Appendix B

EFFECT OF GASKETS ON THE SHORT-TERM STRENGTH OF FLAT DISC ACRYLIC WINDOWS

DISCUSSION

Flat disc acrylic plastic windows require for satisfactory performance gaskets either for sealing, or cushioning in the flange. Although sealing may be accomplished by other means besides a gasket, like for example a radially compressed o-ring[1], gaskets are still generally required on the high and low pressure faces of the window for cushioning the window against contact with the metallic flange and the metallic retaining ring. When gaskets are used, the dimensional tolerances on flatness of the flange seat and retaining ring can be relaxed lowering the cost of the flange assembly appreciably. Also, the use of gaskets almost completely eliminates the danger of unforeseen point loads by the flange and retaining ring on the window surface that may serve as crack initiators.

Before the gaskets are chosen for a given window, some consideration has to be given to their effect on the structural performance of the window. Since gaskets may vary in thickness, hardness, and viscoelasticity, some knowledge of their effect on the catastrophic failure of windows is required so that proper gaskets can be specified for each application. A brief review of existing meager literature on flat disc acrylic plastic windows revealed the absence of any experimental or analytical work dealing with the subject of gaskets for such windows. In view of this, a few exploratory tests with different gasket materials were performed at NCEL on flat disc acrylic plastic windows.

TEST PROGRAM

The objective of the test program was to explore the effect of (1) gasket thickness, (2) gasket material, and (3) retaining ring on the short-term strength of flat disc acrylic plastic windows. The scope was limited to only (1) one window thickness, (2) one window diameter, (3) acrylic plastic, (4) three kinds of gasket materials, and (5) three gasket thicknesses (Table B-1 and Figure B-1).

Test specimens were fabricated from shrunk and unshrunk Plexiglas "G" and Swedlow 350 flat disc acrylic plastic windows of 4.450-inch diameter and nominal 1-inch thickness (Table B-2). Because of manufacturer's casting tolerance on thickness, the actual measured thickness varied from 0.944 to 1.092 inches. Thus, the actual thickness of test specimens was sometimes less than thickness of the windows supplied to EDU. Still for the purposes of this exploratory investigation on gaskets, the findings of this exploratory study are applicable directly to the EDU windows.

Test arrangement was identical to the one described in the main body of the report except that a retaining ring was used to restrain the window in the flange (Figure 2) during the hydrostatic tests. The reasons for it were two-fold: (1) to determine whether the presence of the retaining ring has a significant effect on the pressure at which catastrophic failure occurs, and (2) the actual installation of windows in the EDU chamber does require retaining flanges.

The testing of windows was performed at 650 psi/minute rate in 120°F ambient environment till catastrophic failure of the windows took place. Only the failure pressure was recorded for each test.

FINDINGS

All of the following findings apply directly only to EDU windows, although it can be postulated that they may apply also to windows with other t/D_i and t/D_o ratios.

1. There appears to be no significant difference in failure pressure of windows tested with, or without, bearing gaskets on the window seat in the flange.

2. There appears to be no significant difference in failure pressures of windows tested on thin or thick bearing gaskets.

3. There appears to be no significant difference between failure pressures of windows tested on bearing gaskets fabricated from different materials.

4. There appears to be no significant difference between failure pressures of windows fabricated from shrunk Plexiglas "G", unshrunk Plexiglas "G", or Swedlow 350 plastic.

5. There appears to be no significant difference between failure pressures of windows held in flanges with or without retaining rings.

CONCLUSION

In the selection of bearing gaskets for flat disc acrylic windows, other criteria than failure pressure of the window should be used in the selection of gasket material and its thickness.

RECOMMENDATIONS

For future hyperbaric chamber window assembly designs it is recommended that the bearing gaskets on the high and low pressure faces of the window be made of 0.125 thick commercial cork material. The sealing of the window is to be accomplished by radially compressed o-ring contained in a groove around the circumference of the window. A properly bolted retaining ring is to constrain the window inside the flange cavity. A proposed window design for service at 1000-foot simulated depth utilizing the EDU window dimensions is shown in Figure B-3.

Table B-1. Catastrophic Failure Under Short-Term Hydrostatic Loading of Flat Disc Acrylic Windows Resting on Different Gaskets.

Diameter (psi)	Thickness (psi)	Acrylic Plastic In Windows	Bearing Gasket Material	Implosion Pressure (psi)
4.443	0.995	shrunk Plexiglas G	none	5890
4.446	1.025	shrunk Plexiglas G	none	5620
4.451	1.035	shrunk Plexiglas G	none	6000
4.442	1.072	shrunk Plexiglas G	none	5770
4.443	1.021	unshrunk Plexiglas G	0.025 inches	6100
4.440	0.992	unshrunk Plexiglas G	thick nylon	6050
4.443	0.976	unshrunk Plexiglas G	fabric impregnated	6105
4.441	0.985	unshrunk Plexiglas G	with Neoprene	5855
4.451	1.011	shrunk Plexiglas G	0.025 inches thick	5710
4.437	1.026	shrunk Plexiglas G	nylon fabric im-	6405
4.435	1.000	shrunk Plexiglas G	pregnated with	6100
4.439	1.041	shrunk Plexiglas G	Neoprene	5850
4.450	0.946	shrunk Plexiglas G		5350
4.465	0.944	Swedlow 350		5300
6.965	1.534	Swedlow 350		5390
6.946	1.537	shrunk Plexiglas G		5400
4.447	1.011	shrunk Plexiglas G	0.125 thick	5720
4.458	1.035	shrunk Plexiglas G	Neoprene of 90	7110
4.446	1.001	shrunk Plexiglas G	durometer hardness	7580
4.446	1.028	shrunk Plexiglas G		6380
4.448	0.997	shrunk Plexiglas G	0.125 thick	6120
4.443	1.092	shrunk Plexiglas G	cork gasket	5510
4.442	1.016	shrunk Plexiglas G		6000
4.495	1.001	shrunk Plexiglas G		6430
4.442	1.052	shrunk Plexiglas G	0.250 thick	5740
4.441	1.030	shrunk Plexiglas G	Neoprene of	5640
4.445	1.091	shrunk Plexiglas G	90 durometer	5710
4.446	1.049	shrunk Plexiglas G	hardness	5780

NOTE: 1. All windows were tested at 650 psi/minute rate in 119-120°F ambient temperature environment.

2. The opening in the flange for small windows is 3.000 inches, while for large windows it is 5.000 inches.

3. All bolts on the retaining ring were torqued down to 20-foot lbs.

4. The compression gasket under the retaining ring was in every case 0.125 thick cork gasket.

Table B-2. Mechanical Properties of Acrylic Plastic*
Plate Used for the Fabrication of Test Windows

Property Measured	Minimum	Average	Maximum
Compressive Yield, psi (ASTM D-695)	17,300	17,300	17,300
Compressive Modulus of Elasticity, psi (ASTM D-695)	5.1×10^5	5.2×10^6	5.3×10^5
Deformation Under Compressive Load, percent (ASTM D-621-64; 4000 psi at 122°F for 24 hrs.)	0.36	0.51	0.63
Tensile Ultimate Strength, psi (ASTM D-638-64)	10,200	10,500	10,900
Tensile Modulus of Elasticity, psi (ASTM D-638-64)	4.4×10^5	4.5×10^5	4.6×10^5
Tensile Elongation at Failure, percent (ASTM D-638-64)	3.3	3.4	4.2
Flexure Strength, psi (ASTM D-790)	11,500	15,000	16,700
Flexure Modulus of Elasticity, psi (ASTM D-790)	4.7×10^5	4.8×10^5	4.9×10^5
Shear Strength, psi (ASTM D-732)	9,340	9,410	9,470

*Plexiglas G acrylic plastic meeting MIL-P-21105C specification. Test specimens were cut from plate prior to shrinking it at 300°F.

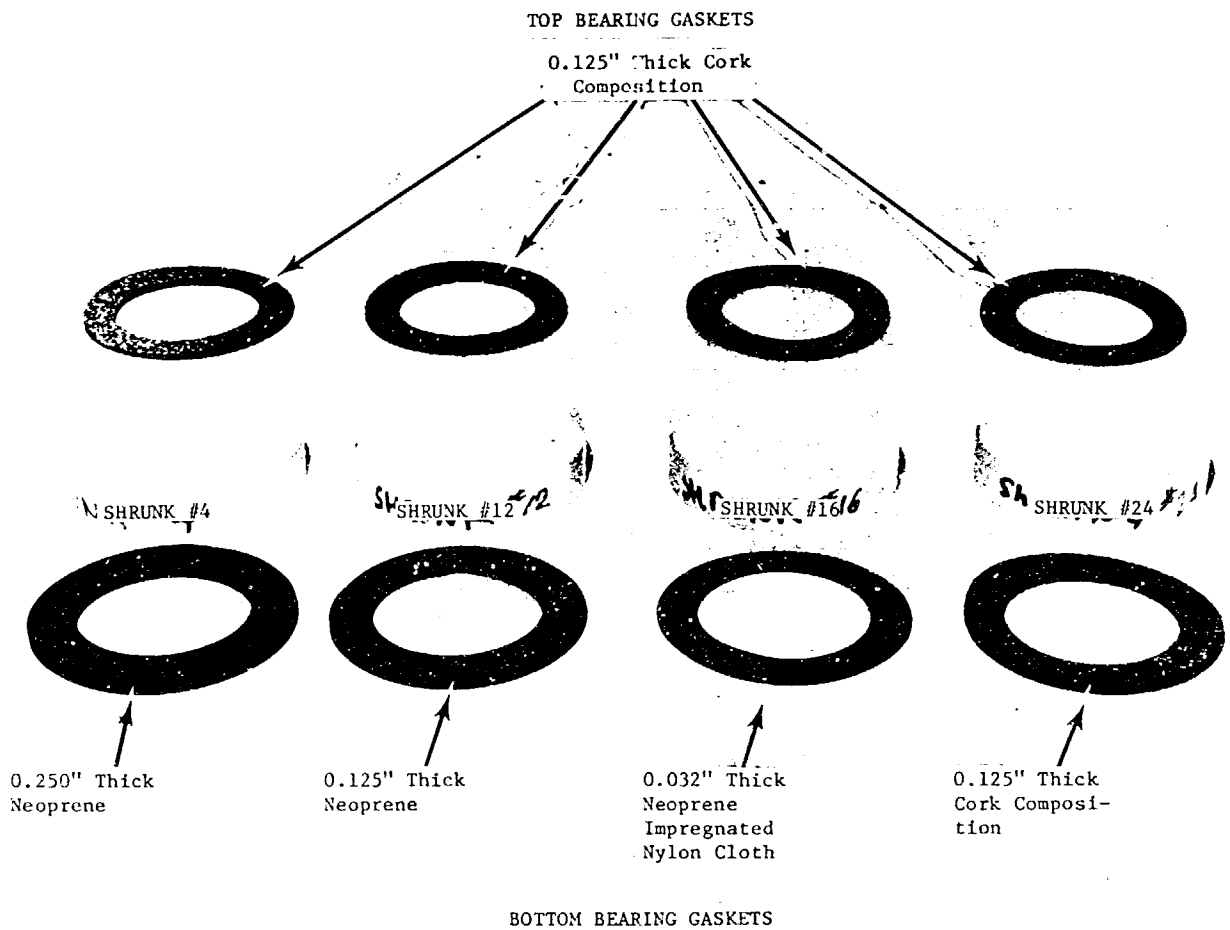

Figure B-1. Typical gaskets used with windows during the gasket evaluation tests.

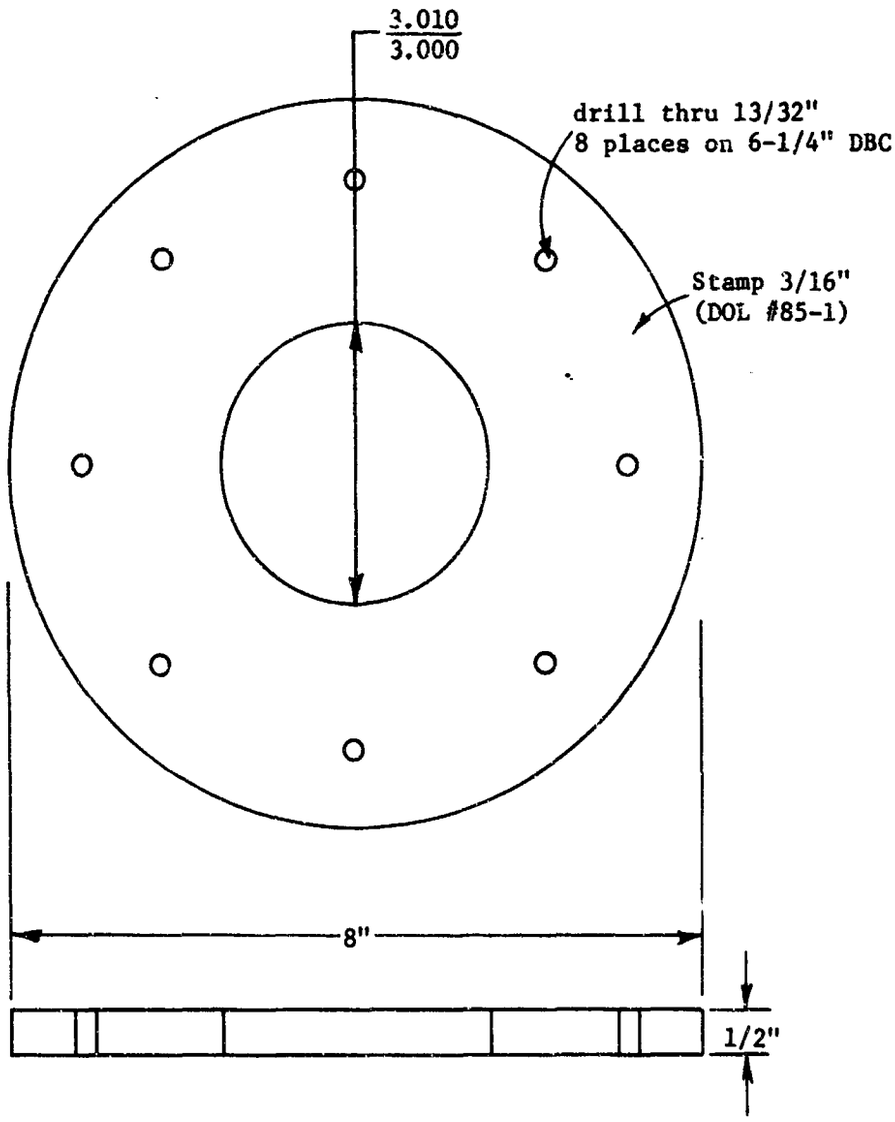

Figure B-2. Retaining ring used in the gasket evaluation tests for compressing the gaskets on the high and low pressure faces of the windows.

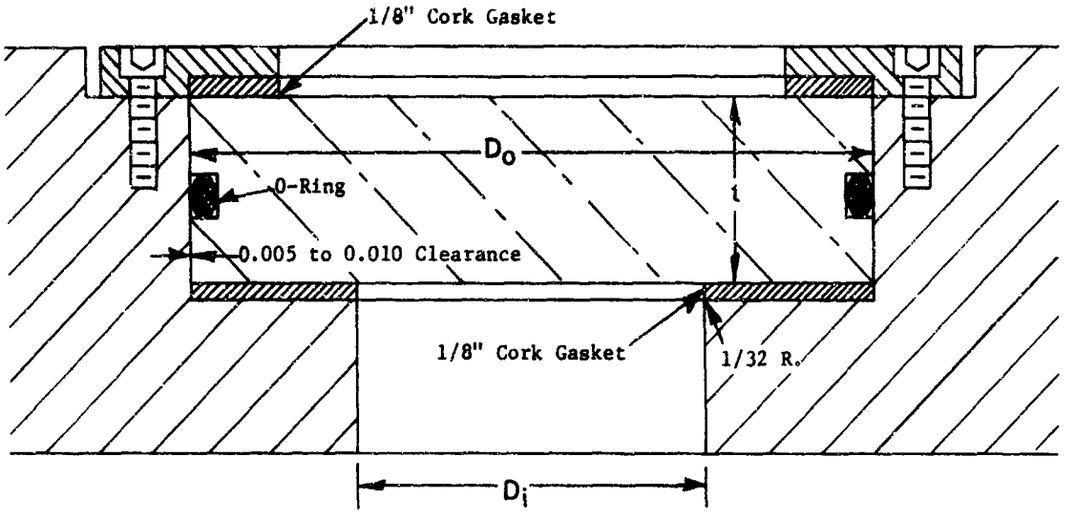

Notes for Windows:

1. Use acrylic plastic MIL-P-21105C, MIL-P-5425 or MIL-P-8184 with mechanical properties satisfying NCEL specifications.
2. All machined surfaces to have 63 or better finish.
3. Use a 1/32-inch radius on all corners, particularly the groove.
4. Anneal after machining for 24 hours at 165°F.
5. For 450 psi service, use $t/D_i \geq 0.325$.

Notes for Flange:

1. D_o/D_i must be in 1.250 - 1.500 range.
2. The surface contacting the O-ring should be 63 or better.

Notes for Gaskets:

1. Use cork, or neoprene with 90 durometer hardness.
2. Do not use grease on bearing surfaces of windows.
3. Bond one gasket to flange seat, the other to retaining ring.

Figure B-3. Proposed window assembly design for future applications in hyperbaric chambers operating at 450 psi.

REFERENCES

1. Technical Report R-527, "Windows for External or Internal Hydrostatic Pressure Vessels; Part II - Flat Acrylic Windows Under Short-Term Pressure Application," by J. D. Stachiw, G. M. Dunn, and K. O. Gray, Naval Civil Engineering Laboratory, May 1967.

2. Technical Report R-676, "Development of A Spherical Acrylic Plastic Pressure Hull for Hydrospace Application," by J. D. Stachiw, Naval Civil Engineering Laboratory, April 1970.

UNCLASSIFIED
Security Classification

DOCUMENT CONTROL DATA - R & D

(Security classification of title, body of abstract and indexing annotation must be entered when the overall report is classified)

1. ORIGINATING ACTIVITY *(Corporate author)* Naval Civil Engineering Laboratory Port Hueneme, California 93041	2a. REPORT SECURITY CLASSIFICATION Unclassified 2b. GROUP

3. REPORT TITLE
FLAT DISC ACRYLIC PLASTIC WINDOWS FOR MAN-RATED HYPERBARIC CHAMBERS AT THE USN EXPERIMENTAL DIVING UNIT

4. DESCRIPTIVE NOTES *(Type of report and inclusive dates)*

5. AUTHOR(S) *(First name, middle initial, last name)*
J. D. Stachiw

6. REPORT DATE November 1970	7a. TOTAL NO. OF PAGES 37	7b. NO. OF REFS 2
8a. CONTRACT OR GRANT NO. b. PROJECT NO. 56-020 c. d.	9a. ORIGINATOR'S REPORT NUMBER(S) TN-1127 9b. OTHER REPORT NO(S) *(Any other numbers that may be assigned this report)*	

10. DISTRIBUTION STATEMENT
This document has been approved for public release and sale; its distribution is unlimited.

11. SUPPLEMENTARY NOTES	12. SPONSORING MILITARY ACTIVITY Supervisor of Salvage

13. ABSTRACT

Flat disc acrylic plastic windows have been designed, fabricated, evaluated and delivered to EDU for replacement of glass windows used to date. The large (D_o = 6.950 inches; t = 1.650 inches) and the small (D_o = 4.450 inches, t = 1.040 inches) windows have been found on the basis of an extensive evaluation program to be more than adequate for man-rated service under 450 psi maximum operational pressure in steel flanges with D_i (diameter of opening in flange) of 5.000 and 3.000 inches. All windows were prooftested to 675 psi pressure at 120°F ambient temperature prior to delivery.

DD FORM 1 NOV 65 1473 (PAGE 1)
S/N 0101-807-6801

UNCLASSIFIED
Security Classification

UNCLASSIFIED
Security Classification

14. KEY WORDS	LINK A ROLE	LINK A WT	LINK B ROLE	LINK B WT	LINK C ROLE	LINK C WT
Acrylic resins						
Plastics						
Windows						
Hyperboric chambers						
Performance tests						
Pressure vessels						
Undersea						
Diver						

DD FORM 1 NOV 65 1473 (BACK)
(PAGE 2)

UNCLASSIFIED
Security Classification