MDC-TR-70-28

AIR FORCE MISSILE DEVELOPMENT CENTER
TECHNICAL REPORT

AD 714554

CALIBRATION AND CHART G
OF THE RAIN SIMULATION FACILITY
AT THE HOLLOMAN AFB TRACK

Hans J. Rasmussen

This document has been cleared
for public release and sale. Its
distribution is unlimited.

DDC
RECEIVED
NOV 25 1970
C

July 1970

HOLLOMAN AIR FORCE BASE
NEW MEXICO

Reproduced by
NATIONAL TECHNICAL
INFORMATION SERVICE
Springfield, Va. 22151

30

MDC-TR-70-28

CALIBRATION AND CHARTING OF THE RAIN SIMULATION FACILITY AT THE HOLLOMAN AFB TRACK

Hans J. Rasmussen

July 1970

AIR FORCE MISSILE DEVELOPMENT CENTER
DIRECTORATE OF TEST TRACK
AIR FORCE SYSTEMS COMMAND
HOLLOMAN AIR FORCE BASE, NEW MEXICO

FOREWORD

The objective of this report is to present some general considerations on rain simulation under field conditions, to discuss selected technical features of the rain simulation facility at the Holloman AFB Test Track which are relevant to calibrating and charting density and droplet size distribution of the simulated rain, and to provide a detailed glossary of terms needed for charting the rain field by means of the ETRI rain counter. Data obtained through this charting effort will be published in separate reports as they become available.

PUBLICATION REVIEW

This technical report has been reviewed and is approved.

TYLER A. REDFIELD
Colonel, USAF
Director of Test Track

ABSTRACT

Some basic considerations governing rain erosion testing on the Holloman AFB Test Track are presented, and the equipment used for generating artificial rain is described to the extent relevant to charting the rain field. Some characteristics governing application of the IITRI rain counter are discussed and the analysis of data obtained by this instrument is outlined.

TABLE OF CONTENTS

A	Introduction	1
B	Rain Field Characteristics	3
C	Rain Counter Characteristics	6

LIST OF ILLUSTRATIONS

1. Particle size distribution of water droplets in a steady rain, based on Handbook of Geophysics and Space Environments
2. Cross section of rain system under "no wind" conditions (schematic)
3. Water flow system of rain simulation facility (schematic)
4. Sampling cross section and optical volume (schematic)

LIST OF SYMBOLS

A	$inch^2$	Sampling cross section
D_i	mm	Mean droplet diameter for size range i
D_{med}	mm	Mass median diameter
ΔD	mm	Droplet diameter increment (for MAG = 8 ΔD - .5 mm
$f_{(corr)}$		Edge correction function (see reference 4, pages 46 ... 59)
h_w	inch	Hood setting (referred to as *opening* in Fortran program
i		Subscript for size range (see reference 4, Table 13)

LWC	gr/m^3	Liquid water content -- total mass of water droplets dispersed in one cubic meter of air space
LWC_i	g/m^3	Specific liquid water content
MAG		Optical volume setting (magnification) 1 : 8, 1 : 5, 1 : 2
n_F		n_F = 7.5 flashes per second
N_i	$\frac{droplets}{m^3}$	Number of droplets of size range i in one cubic meter of air space counted during one specific time increment Δt
$\bar{N}_i$	$\frac{droplets}{m^3}$	Mean number of droplets per size range i, averaged over n samples of duration Δt each
$PLWC_i$	%	Percent of total liquid water content contributed by droplets of size range i
RA	mm/h	Rain rate
RAC	mm/h inch/h	Accumulation rate of simulated rain
Δt	sec	Time increment for each sample; unless otherwise specifically specified Δt = 10 sec
V_i	ft/sec	Terminal velocity of rain droplets of diameter i
x_i		Raw number of droplets of size range i counted in sampling volume V_s per time increment Δt
$x_{i\ corr}$		Raw number of droplets x_i corrected for edge errors $x_{i\ corr} = x_i \cdot f_{(corr)}$
$\bar{\sigma}_i$		Variation coefficient -- standard deviation of droplet counts in size range i over n individual samples, as fraction of mean

LIST OF TABLES

1. Droplet diameter size categories for raindrop analyzer

2. Sample of rain counter data printout

3. Terminal velocity of raindrops (examples, based on equation by Clark and Moyer)

4. Sample of data evaluation format

A. Introduction

The purpose of rain erosion testing on the track is to study the erosive effects of extended supersonic or hypersonic flight through rain clouds on material samples and components of weapons and aerospace systems, and to qualify flight hardware for this flight environment. The Test Track at Holloman AFB, NM, provides a capability for this kind of testing simulating a wide variety of combinations between specified rain environments and specified flight conditions.

There are two basic options for providing realistic test conditions as far as the rain environment is concerned. One possibility is to duplicate the natural environments, the effects of which are to be studied. The alternate approach is to provide simulated rain environments and to define similarity parameters correlating the effects of the simulated rain environment to the effects of the corresponding natural rain. Track testing deals exclusively with the second of these two approaches.

A short review of some essential parameters used in rain simulation is given in reference 1. In erosion testing the basic criteria for the rain per se are the total number and the size of the droplets which the sled-borne test item intercepts while moving through the rain field and the correlation of this number with representative natural rain environments or specified rain conditions. The dominating rain field parameters are, therefore, the rain density (also referred to as concentration), i.e., the total number of rain droplets in a specified reference volume, and the particle size distribution, i.e., the detail breakdown into the fractions of this total number which are contributed by particles of the various sizes.

The rain rate, i.e., the depth of water accumulated per unit time on a specified horizontal surface area (usually expressed in millimeters or inches per hour), is a widely used criterion for natural rain phenomena. The accumulation rate of the artificial rain is, on the other hand, only of very limited value for describing simulated rain conditions, because only the rain density, and the droplet size distribution, not the terminal velocity of the individual droplets are duplicated. Since, however, the velocity of the falling rain droplets is, as a rule, by several orders of magnitude smaller than the velocity of the test system (sled including payload), rain erosion testing on the track involves no primary requirement for duplicating this parameter. Therefore, the accumulation rate of the simulated rain is used mainly as a criterion for the uniformity of different sections of the rain field, not as an environmental criterion.

The liquid water content (LWC); i.e., the total mass of liquid water present in the reference volume, is, in connection with the sled velocity, sometimes used to define the kinetic energy of a given rain environment. Considerable care is, however, needed in using the liquid water content as a criterion for rain erosion testing. It is a meaningful quantity only in connection with the droplet size distribution, because the identical LWCs can be produced by droplets of very different size distribution. Conceivably, all water in the reference volume could be existing in one large drop, making LWC a meaningless quantity.

Natural rains of identical rain rates show considerable variations in droplet size distributions, and a rain observed, e.g., in the Arctic, may have very different characteristics from a rain of similar rate in the tropics. To arrive at a common denominator for defining test conditions, the relationship between rain rate and particle size distribution presented in the chapter on precipitation, clouds and aerosols of the Handbook of Geophysics and Space Environments (reference 2), equations 5-3 and 5-4, is used for correlation purposes. The attached Figure 1 represents this relationship in the form

$$N_\Delta = \frac{2265.3 \cdot \Delta D}{\exp\left(4.078 \frac{D}{R^{0.21}}\right)} \qquad \frac{\text{particles}}{\text{ft}^3 \cdot \text{size range (mm)}}$$

with	ΔD	mm	size range
	D	mm	mean particle diameter per size range
	R	mm/h	rain accumulation rate
	N	$ft^{-3}mm^{-1}$	number of particles in the size range ΔD present in one cubic foot of the reference volume at any particular instant of time

The variability of droplet size distributions in natural rains for identical accumulation rates between different locations, seasons, etc., suggests the use of the standard defined by the Handbook of Geophysics within rather wide tolerances.

To realistically simulate a specified natural rain for test purposes, it is necessary to simultaneously duplicate both the droplet size distribution and the rain density. In track testing, the total number of droplets

intercepted by a test object is limited by the fixed length of the track. For some applications, it is possible to "compress" distance, i.e., to simulate flight through a larger cloud, by increasing the rain density: i.e., by increasing the number of droplets intercepted in the available length while keeping the particle size distribution constant within acceptable tolerances. It is realized that the validity of this procedure is not generally accepted, because it disregards secondary effects, e.g., material relaxation times, which may become important at very high test speeds. However, for a number of applications, a capability to duplicate a given particle size distribution over a range of rain densities is considered advantageous.

For quantitative evaluation of rain tests, it is highly important to define the characteristics of the simulated rain environment for various operational conditions, e.g., various type nozzles, different discharge pressures, etc., to experimentally determine the influence of side wind components on the droplet size distribution, and to establish the cut-off wind velocities above which the droplet size distribution is no longer acceptable for test purposes. This information is compiled and updated by systematic charting of the rain field. A previous attempt to arrive at a rain field calibration by optical means (reference 7) before the rain counter became available was unsuccessful because of inadequate equipment.

B. Rain Field Characteristics

The equipment for generating simulated rain at Holloman AFB, NM, is located on a 6000 foot section of the Test Track. The basic layout of this system is presented in detail in reference 3. A schematic cross section is shown in Figure 2. The simulated rain is supplied by spraying sections, each 400 feet in length. There are 15 of these 400 foot sections on each side of the track, located 9 feet from the centerline of the west rail. Each section contains 50 spray heads spaced 8 feet apart. The spray heads are mounted on 5 foot risers consisting of 1.315 o.d. aluminum pipes. The spray heads are attached to the risers by quick disconnect mounts for easy interchange. In the 400 foot sections, water is distributed through 4 inch (o.d.) aluminum irrigation tubing (riser feed line), which in turn feeds the individual 1.315 inch diameter risers.

The 400 foot sections are supplied with water from 6 inch (o.d.) main lines, consisting of aluminum irrigation pipes, on each side of the track. These 6-inch mains are fed through a T-type connection located at the mid-point of the rain area. The length of the mains from the center to the end is 2800 feet. A cut-off valve and a pressure regulator valve are located in the connecting pipes between the 6-inch

main line and each of the 4-inch feeder lines of the spraying sections. The entire aluminum system is portable and can be readily dismantled in 40-foot lengths for storage. The cut-off valves at the inlet to each spraying section are normally in the full open position. When less than the entire 6000 feet of the rain environment is required, the appropriate number of 400 foot sections are shut off by closing these gates.

The six inch main lines receive their water through a motor driven pump from a 25,000 gallon reservoir. The flow system is schematically shown in Figure 3. In starting the system, the pump works in a by-pass mode, taking water from the tank and moving it back through the by-pass. For the test, the by-pass is closed and the water supply to the main lines opened. If required for control of the main line pressure, the system can also be operated with the by-pass partially open.

The flow regulators at the entrance to each 400 foot section are designed to set, adjust and monitor the discharge pressure at the spray nozzles and with it the flow rate through these nozzles at a preselected value, and to keep this value constant within ± 0.5 psig independent of upstream pressure fluctuations, and of leaks in the system upstream or downstream of the regulator. This requirement is fulfilled by the use of remote signal operated regulators in which the valve position is controlled by a spring-loaded diaphragm receiving its control signal (reference pressure) from a point downstream of the regulator at which the pressure is equivalent to the discharge pressure at the individual spray nozzles except for the static pressure head due to the elevation of the spray nozzles above the 4-inch diameter riser feed line, and for -- usually negligible -- pressure losses in the feed line and the riser. The reference pressures of all 30 individual 400 foot sections are measured and remotely displayed in the rain field blockhouse. They can be selected at any value between 5 and 15 psig.

Before the current regulators were installed, the rain system was equipped with directly operated control valves for each 400 foot section. In these valves a spring loaded diaphragm controlled the valve position. The diaphragm received its control signal (reference pressure) from a reference point immediately downstream of the regulating gate. This instrument, if working properly, kept the static pressure at its reference point constant. It kept, however, the flow rate constant only for a given set of downstream conditions and changed the flow rate through the nozzles any time the downstream conditions were changed, for instance, due to leaks. This system was abandoned in favor of the currently installed regulators. In selecting the current system, it was also considered that the requirement for a constant rain rate could not be fulfilled by rate of flow controllers of conventional type, because these instruments keep the flow through the regulator, not through the nozzles, constant; and leaks developing downstream must necessarily change the rain rate produced by the spray nozzles.

The rate of flow through each of the 400 foot sections depends on the regulator pressure setting and the type of spray nozzles used. A typical example of a currently used flow rate in one individual section is 140 gallons per minute with a pressure in the 4-inch riser feed line of 11 psig. The maximum allowable water discharge flow rate through any 400 foot spray section is limited to a maximum of 200 gal/min by the layout of the water supply system and the flow regulators. However, in the interest of economy and to alleviate drainage problems, water consumption is generally kept as far as possible below this level by restricting it to the minimum needed to fulfill the system performance requirements.

By being installed in the open air along the track, the existing rain simulation system is highly sensitive to natural winds. As a rule the current system produces a satisfactory rain environment over the west rail only at very low cross wind velocity components which restricts this kind of tests to "no wind" conditions, and leads to severe operational restrictions in rain erosion test programs. One of the major objectives of the rain field charting efforts is to arrive at numerical data on the maximum cross track wind velocities which can be tolerated without impairing test results. Due to the relatively long flight path of the individual droplets and their low vertical velocity component (far below the terminal velocity characteristic for natural rain), the time during which they are subjected to the influence of the wind is relatively long. Another problem is introduced by the inherent cross velocity components of the droplets approaching from both sides of the field (Figure 2). They are insignificant for erosion testing per se, but contribute to the wind sensitivity of the system. While cross wind would shift a set of vertically falling droplets simply to one side, under the current arrangement the droplets coming from the leeward side are subjected to the wind for a shorter portion of their flight path than the others, which changes the ratio to which droplets from both sides "mix," and leads to changes of droplet size distribution even under fairly small side wind components.

One approach to reduce the wind sensitivity of the simulated rain consists of enclosing the system in a tunnel-like structure to eliminate the wind influence completely, or at least to reduce its magnitude by use of track-side wind fences or comparable structures. This possibility is being investigated, however, no practical results are available yet. Another approach is to "widen" the field to such an extent that even a "shift" by several feet under side wind will still provide an acceptable droplet size distribution above the rail. A third approach consists of decreasing the time during which the individual droplets are subjected to the wind.

Reducing the wind sensitivity by "widening" the cross-track dimension of the rain environment such that even under the maximum allowable cross wind component, the droplet density and droplet size

distribution above the rail stay within tolerable limits, is basically feasible, though operationally undesired and uneconomical due to high water consumption.

Reduction of the time during which the droplets are subjected to wind can be achieved by increasing the velocity of fall of the droplets. Unfortunately the idea of raising the height of fall to the point where terminal velocity could be achieved does not appear promising. Not only would the size of such a system make it structurally impractical, but it would also severely interfere with other uses of the track. In addition, the falling droplets would be subjected to the wind environment for a longer time, increasing rather than decreasing their displacement as compared to the current arrangement. It appears, however, feasible to increase the downward speed of the rain droplets by adding the discharge velocity from the spray head to the particle velocity attained under the influence of gravity and air drag. This approach is being studied experimentally.

C. Rain Counter Characteristics

To eliminate the laborious and time consuming procedures involved in conventional methods for measuring droplet size distributions, a special instrument for real time measurements of this parameter has been developed for the Test Track by the Illinois Institute of Technology. It is referred to as the rain counter, occasionally also as the rain drop analyzer or the rain drop spectrometer. Technical information on this device as well as its function and limitations are treated in detail in reference 4. A comprehensive field calibration of the rain counter was conducted in 1969 by Dr. Eugene Mueller, Illinois State Water Survey at the University of Illinois. The results are reported and discussed in detail in reference 5.

Basically the rain counter is an electronic device to measure (1) the total number of water droplets, (2) the distribution of droplet sizes in a defined reference volume by means of an electronic scanning technique. This instrument employs a vidicon viewer. The size of each water droplet is estimated from measurements of the number of vidicon scan lines intersecting the drops, and an analytical correction is applied to the readings to correct for edge errors.

Depending on the optical volume setting (magnification), the instrument detects and categorizes droplets in the diameter size categories shown in Table 1, which is identical to Figure 13 in reference 4.

The optical volume V_o is determined by the sampling cross section A and the hood setting h_H (see Figure 4). The sampling cross section for the three optical volume settings are:

MAG 8: $A = 2.875 \times 3.281 = 9.4616$ in^2

MAG 5: $A = 1.875 \times 2.156 = 4.0425$ in^2

MAG 2: $A = .687 \times .781 = .5366$ in^2

The depth of the optical volume is determined by the hood setting h_H. Its maximum value is 16 inches; however, as a rule, a smaller value is selected, and a hood setting of $h_H = 6$ inches has frequently been used during calibration tests.

A flash tube light source provides illumination against which the drops are viewed. Flash duration is selected to arrest the drop motion; intensity is chosen so that the instrument will operate equally well in night or sunlight conditions; and the flash frequency (7.5 flashes per second) was picked to assure that the time increment between flashes is sufficient to allow a completely new set of droplets to move into the reference volume between subsequent flashes. To achieve this objective, the velocity of the slowest moving droplet has to be large enough to move out of the field of view in less than 1/7.5 sec, regardless of its direction. Assuming motion in a plane perpendicular to the rail only, the minimum droplet velocity has to be:

In case of vertical fall:

$$V_{min} = 2.875 \cdot 7.5 = 21.56 \text{ in/sec} = 1.8 \text{ ft/sec}$$

In case of a transverse velocity component causing motion along the longest possible (diagonal) flight path:

$$V_{min} = 7.5 \cdot \sqrt{2.875^2 + 3.281^2} = 32.718 \text{ in/sec} = 2.726 \text{ ft/sec}$$

Assuming the unlikely case of motion along a diagonal of the optical volume (6 inch hood setting):

$$V_{min} = 7.5 \cdot \sqrt{2.875^2 + 3.281^2 + 6^2} = 55.64 \text{ in/sec} = 4.64 \text{ ft/sec}$$

The optical volume is the air space covered by one individual light flash. The sampling volume is defined as the volume of the air space tested by the counter during one sample of duration Δt at a flash rate of $n_f = 7.5$ flashes per second:

$V_s = A \cdot h_s \cdot n_f \cdot \Delta t$ For: $A = 2.875 \times 3.281\ in^2$
$n_f = 7.5$ flashes/sec
$h_s = 6$ in
$\Delta t = 10$ sec

$V_s = 70.74656 \cdot \Delta t \cdot h_s\ in^3$

$V_s = 4244.6\ in^3 = .06956\ m^3$

The total number of samples for each individual printout can be selected according to specific test needs and is, as a rule, governed by statistical considerations relating the number of samples to specified acceptable errors for various droplet size ranges. In the optical volume setting of 1 : 8, the total number of counts per sample must be kept below 900 to avoid excessive errors due to shielding of specific drops by others.

In the optical volume setting 1 : 8, the instrument categorizes particles having diameters between 1/4 and 4 millimeters. Its results are printed on the spot and are available seconds after completion of the test. The printout provides, besides data pertaining to the operation of the instrument itself, the number of droplets observed in the reference volume in each of the droplet size ranges. An example of the printout format is shown in Table 2.

The device is mounted on a rail-bound carriage and can be used at any fixed position along the track, or in an averaging mode by moving along the track while sampling. The maximum forward velocity of the counter (assuming no wind) is limited by the condition that none of the droplets is displaced to such an extent as to move out of focus. This displacement will obviously affect the slow moving droplets relatively more than the faster moving ones.

Assume the slowest moving droplets recognized by the counter (.25 mm dia) move vertically at their terminal velocity $V_T = 3.18$ ft/sec = 38.17 in/sec. They will travel the length of the vertical dimension of the viewing volume in

$$\Delta t = \frac{2.875}{38.17} = .075317 \text{ sec}$$

At a counter speed of 1 ft/sec, they will be displaced by

$$\Delta s = .0753 \times 12 = .9 \text{ inch}$$

resulting in an angle

$$\gamma = \arc\tan \frac{.9}{2.875} = \arc\tan .313 \approx 17.5 \text{ deg.}$$

At a forward speed of .5 ft/sec the displacement angle would be

$$\tau = \text{arc tan} \frac{.45}{2.875} = \text{arc tan } .156 \approx 8 \text{ deg}$$

Since the forward velocity adds vectorially to any wind component in direction of counter motion, it is somewhat arbitrarily concluded that a counter velocity of 30 ft/min (.5 ft/sec) as used in previous calibrations is adequate.

For charting the rain field by means of the rain counter, the following four types of data need to be collected and recorded:

a. Rain Field Configuration

(1) Nozzle type

(2) Nozzle angular orientation with tolerances

(a) Vertical
(b) Lateral

(3) Nozzle arrangement geometry in case not all nozzles are used (covered or not operated)

(4) Mean or characteristic example of height of nozzle exit above

(a) Rail top surface
(b) Regulator reference point

for both W and E side of the portion of the rain field covered.

(5) Nozzle discharge pressure P_{dis} expressed in terms of

(a) Regulator pressure setting (psig)
(b) Static pressure head due to height of nozzle exit cross section above regulator reference point (h_{stat} - ft)

b. Rain Counter Configuration

Δt	sec	Sampling time (as a rule Δt = 10 sec)
MAG		Optical volume setting (magnification) unless otherwise specifically specified: 1 : 8
h_A	inch	Hood setting

Z	inch	Height of center of sampling cross section above top surface of rail
Y	inch	Lateral displacement of center of sampling cross section from rail center (Y_{east} or Y_{west})

c. Ambient Conditions

V_a	ft/sec (or: mph or: knots)	Wind velocity and wind direction during test; preferably taken both at a point moving along with the counter and at ground-fixed wind recording stations.
T	°F	Air temperature at time of test
P	in Hg	Barometric pressure at time of test
HU	%	Relative humidity of free air (not affected by simulated rain)

d. Data Outputs

V_c	ft/min (or: ft/sec)	Moving velocity of the counter along rail
ℓ	ft	Length of pass along track covered by the counter to be recorded in terms of (a) Track stations between which the counter moved during test (b) Total distance covered by counter in case a section of track is covered going back and forth (c) Number of samples of duration Δt each taken during this pass.
X_i		Rain counter printouts
RAC	inch/h mm/h	Accumulation rate of simulated rain measured at a point moving along with the rain counter in about the same position with respect to height above rail and lateral displacement from rail center as the sampling cross section.

The data analysis of the rain counter readings is performed by means of a computer program developed by Dr. Eugene Mueller of the University of Illinois, which was adapted to a CDC 3600 computer available at Holloman AFB and slightly modified to meet more closely the specific needs of charting the Holloman AFB rain field.

The individual printouts of the rain counter, showing the number of droplets X_i counted for each size range are corrected for edge errors by analytical means. The statistical considerations on which this correction is based and the equations are outlined in detail in reference 4.

As a basis for comparison with other data, the droplet counts X_i for each particular size range are, after applying the edge error corrections, referred to an airspace of one cubic meter, and the droplet counts printed out for each sample are defined as

$$N_i = \frac{X_i \cdot f_{(corr)}}{V_s} \qquad \text{(droplets/m}^3\text{)}$$

For a physical interpretation of this reference volume in terms of sled run parameters, assume a test item of circular cross section of diameter d is moved along the track over a distance ℓ = 1000 ft, sweeping a cylindrical volume of length ℓ and cross section $d^2\pi/4$. For this cylindrical volume to be one cubic meter, the diameter of the circular cross section is

$$d = \sqrt{\frac{V}{\ell} \cdot \frac{4}{\pi}} \qquad \text{with } \ell = 1000 \text{ ft} = 12{,}000 \text{ inch}, \quad V = 1 \text{ m}^3 = 61{,}024.044 \text{ inch}^3$$

$$d = \sqrt{\frac{61{,}024.044}{12{,}000} \cdot \frac{4}{\pi}} = 2.545 \text{ inch}$$

The numbers of droplets counted in each specific droplet size range during subsequent samples show a considerable spread due to various influences; the most significant of which are variations in local cross wind components, inaccuracies in nozzle alignment, and manufacturing tolerances of the discharge cross sections of the individual nozzles. Since during erosion tests, a test item is moved along the length of the rain field, these local fluctuations tend to average out. The mean of the number of droplets per size range, averaged over a large number of samples n while moving the counter along a specified length of travel along the rail is therefore used as a representative figure for the number droplets intercepted by an erosion test item

sweeping a corresponding distance of the rain field. This mean for each droplet size range is expressed as

$$\bar{N}_i = \frac{\sum_{i=5}^{i=4} N_i}{n} \qquad \frac{\text{droplets}}{m^3}$$

and denotes the number of droplets of size range i which a circular test item of d = 2.54 inch diameter can be expected to intercept under the conditions prevailing during the test while moving a distance of 1000 ft through the simulated rain.

An indication of the spread of the individual sample counts around this mean is afforded by a variation coefficient, which is defined as the standard deviation of the numbers of droplets counted in the individual samples as fraction of the mean:

$$\bar{\sigma}_i = \frac{\sigma}{\bar{N}_i}$$

For erosion testing, the liquid water content of the simulated rain field is sometimes of interest. In the following the liquid water content (LWC) is defined as the mass of all water droplets dispersed in one cubic meter of air space. The specific liquid water content LWC_i is intended to mean the mass of all droplets of one particular size range i dispersed in an airspace of one cubic meter. Expressing the LWC in terms of rain counter readings yields:

$$LWC_i = \rho_w \cdot \bar{N}_i \cdot \frac{\pi}{12} \left[\left(D_i - \frac{\Delta D}{2} \right)^3 + \left(D_i + \frac{\Delta D}{2} \right)^3 \right]$$

$$LWC = \sum_{i=5}^{i=4} LWC_i$$

For many purposes it is also useful to know the percent of the total liquid water content contributed by droplets of a specified size range i:

$$PLWC_i\ (\%) = \frac{LWC_i}{LWC} \cdot 100$$

This term also allows definition of the mass median diameter D_{med}, a quantity frequently used by nozzle manufacturers to characterize the droplet distributions produced by different type nozzles. The mass median diameter is the droplet diameter defined by the condition that half of the LWC is contributed by droplets of larger, half by droplets of smaller diameter than D_{med}.

Natural rain usually is characterized by the rain rate, expressed in mm/h, i.e., the height of a column of water which would be accumulated above a specified area parallel to the ground if the rain prevailed for an hour. In natural rain all droplets are falling at their terminal velocity, while in simulated rain, the height of fall is as a rule insufficient for the droplets to reach their terminal velocity. The measured accumulation rate of the simulated rain, RAC, is therefore always lower than the rate of a natural rain having identical liquid water content and droplet size distribution. For correlation between a rain environment determined by the rain counter and a comparable natural rain, a corresponding rain rate RA is defined and calculated in the data evaluation. It is the rate at which the simulated rain would accumulate on the ground if all of its droplets were at their terminal velocity:

$$RA = \sum_{i=.5}^{i=4} (LWC_i \cdot V_{Ti}) \frac{gr}{m^3 \cdot sec}$$

$$= 3.6 \cdot \sum_{i=.5}^{i=4} (LWC_i \cdot V_{Ti}) \frac{mm}{h}$$

For purposes of this rain rate evaluation, the terminal velocity of the drain drops is calculated by the equation of Clark and Moyers which fits the Gunn and Kinser data (reference 6).

$$V_T = -C_0 + C_1 D - C_2 D^2 + C_3 D^3 - C_4 D^4$$

with C_0 =	27.128	D	cm	droplet diameter
C_1 =	5,223.06			
C_2 =	11,075.7	V_T	cm/sec	terminal velocity
C_3 =	11,115.0			
C_4 =	4,688.4	V_T	ft/sec	$\frac{V_T \text{ (cm/sec)}}{30.48}$

Examples for the droplet size ranges covered by the rain counter are shown in Table 3 and in Figure 5, reference 1.

TABLE 1

DROPLET DIAMETER SIZE
CATEGORIES FOR
RAINDROP ANALYZER

Printer channel number	Number of scan lines	Droplet diameter range, mm Optical volume setting 1:2	1:5	1:8
2	5-10	0.01-0.11	0.15-0.45	0.25-0.75
3	11-16	0.11-0.21	0.45-0.75	0.75-1.25
4	17-22	0.21-0.31	0.75-1.05	1.25-1.75
5	23-28	0.31-0.41	1.05-1.35	1.75-2.25
6	29-34	0.41-0.51	1.35-1.65	2.25-2.75
7	35-40	0.51-0.61	1.65-1.95	2.75-3.25
8	41-46	0.61-0.71	1.95-2.25	3.25-3.75
9	47-52	0.71-0.81	2.25-2.55	3.75-4.25

TABLE 2

SAMPLE OF RAIN COUNTER
DATA PRINTOUT

Channel	Data counts	Number of droplets Size range mm	Mean diameter mm
9	003	4.25 ... 3.75	4
8	003	3.75 ... 3.25	3.5
7	006	3.25 ... 2.75	3
6	027	2.75 ... 2.25	2.5
5	080	2.25 ... 1.75	2
4	190	1.75 ... 1.25	1.5
3	198	1.25 ... .75	1
2	292	.75 ... .25	0.5
1	008	Optical volume setting	1:8
0	010	Sampling time	10 sec

TABLE 3

TERMINAL VELOCITY OF RAINDROPS
(Examples, based on equation
by Clark and Moyer)

D	V_T	
mm	cm/sec	ft/sec
4	881.34	28.91
3.5	850.38	27.90
3	805.12	26.41
2.5	741.77	24.34
2	655.88	21.52
1.5	542.27	17.79
1	395.07	12.96
0.5	207.67	6.814
0.25	96.70	3.181

TABLE 4 Sample of Data Evaluation Format

Sample Nr.	Rain Rate		LWC	N(0.5)	N(1.0)	N(1.5)	N(2.0)	N(2.5)	N(3.0)	N(3.5)	N(4)	Concentration
	mm/h	inch/h	gr/cbm									
Mean												
Dev												
Mass Percent												
Mass Percent Accum												
100 - Mass Percent Accum												

Number of Samples: _____

Mass Median Dia: _____ mm

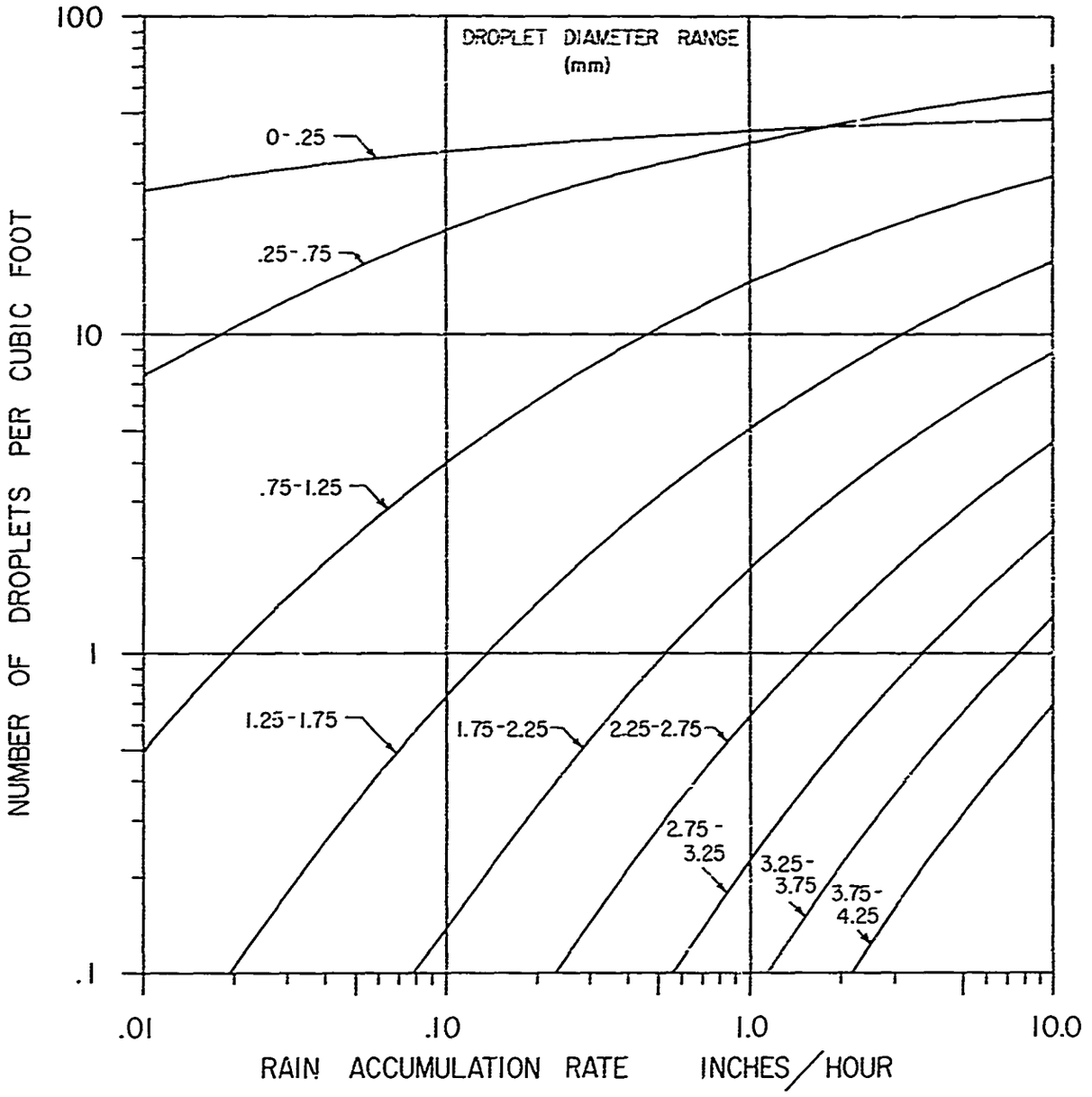

FIGURE 1. DENSITY DISTRIBUTION OF WATER DROPLETS IN A STEADY RAIN

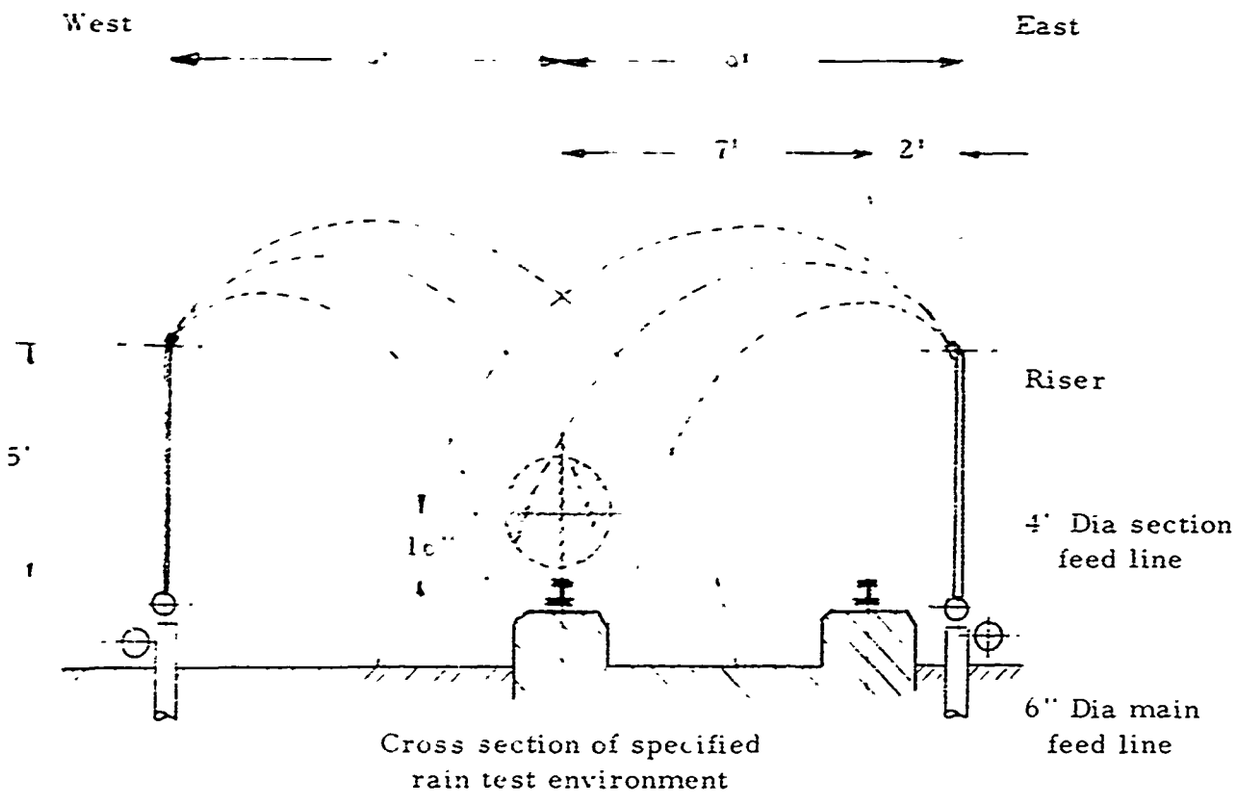

Figure 2 Cross section of current rain system under no wind condition (schematic)

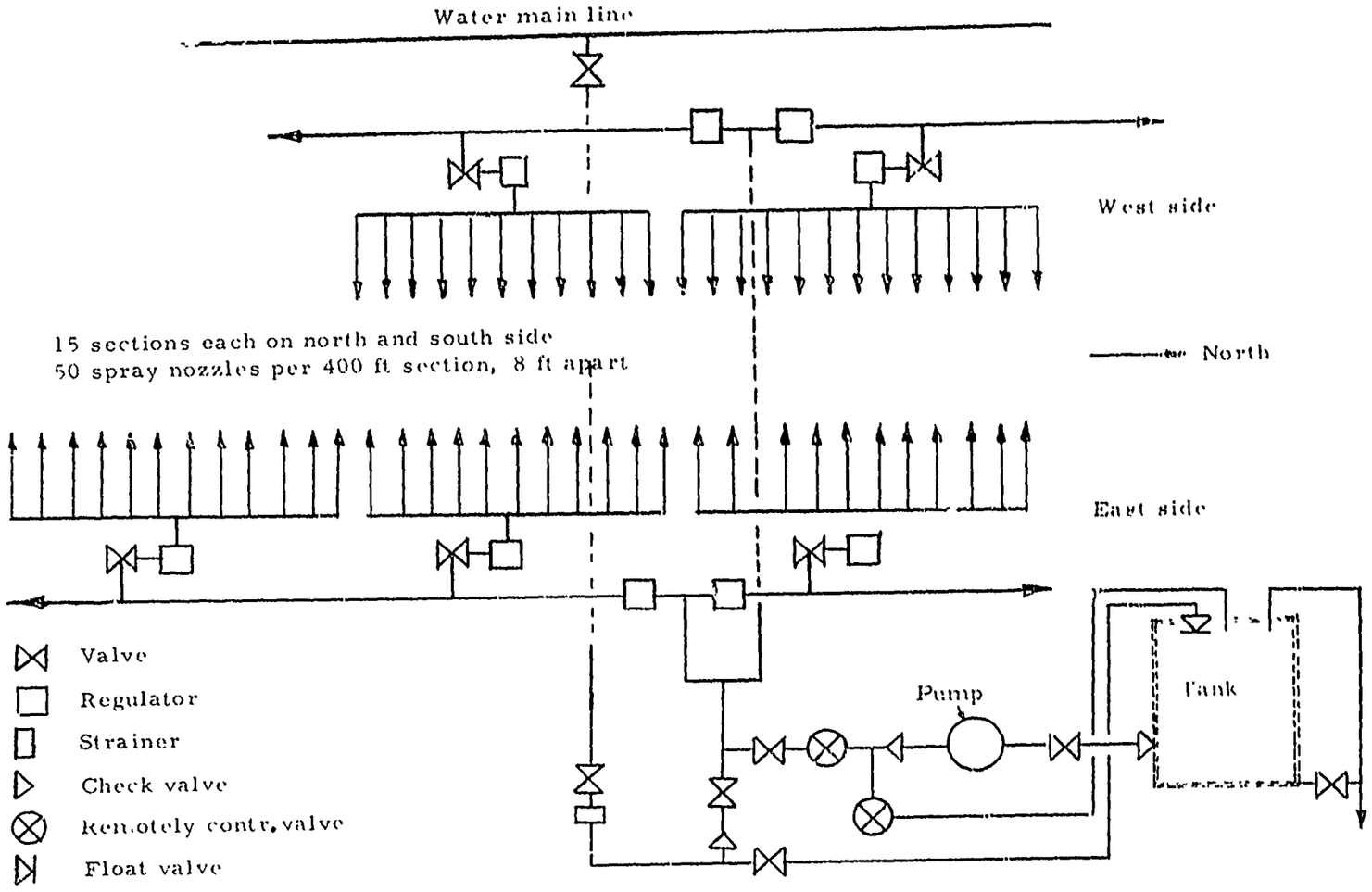

Figure 3 Water flow system of rain simulation facility (schematic)

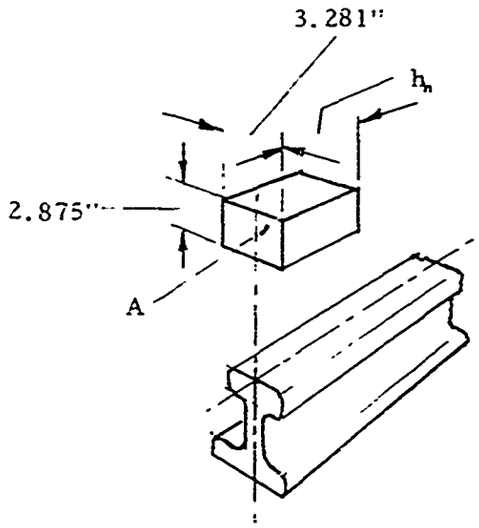

Figure 4 Sampling cross section and optical volume (schematic)

REFERENCES

1. Album, H. H., Rain Field Simulation, Directorate of Test Track, Working Paper, 5 Oct 1966

2. Atlas, D., Precipitation, Clouds and Aerosols," Chapter 5.2 of Handbook of Aerophysics and Space Environments, Air Force Cambridge Research Laboratories

3. Reynolds, M. C., Rain Measurement and Simulation for Supersonic Erosion Studies, Sandia Laboratories, Report SCR-474, Feb 1962

4. Jackson, M. R., et al, Preliminary Design Studies for a Sled-Track Rain-Simulation Facility, Vol I, Technical Design Studies, IIT Research Institute, May 1969

5. Mueller, E. A. and Sims, A. L., Measurement of the Simulated Rainfall at the Holloman Test Track Facility (in process of publication as an AFCRL report) April 1970

6. Gunn, R. and Kinzer, G. D., The Terminal Velocity of Fall of Water Droplets, Journal of Meteorology, Aug 1949

7. Jackson, B. K., Rainfield Calibrations, Directorate of Test Track Working Paper, May 1967

Unclassified
Security Classification

DOCUMENT CONTROL DATA - R & D

(Security classification of title, body of abstract and indexing annotation must be entered when the overall report is classified)

1 ORIGINATING ACTIVITY (Corporate author) AFMDC (MDT) Holloman AFB, NM 88330	2a. REPORT SECURITY CLASSIFICATION Unclassified 2b. GROUP

3 REPORT TITLE

Calibration and Charting of the Rain Simulation Facility at the Holloman AFB Track

4 DESCRIPTIVE NOTES (Type of report and inclusive dates)

5 AUTHOR(S) (First name, middle initial, last name)

Hans J. Rasmussen

6 REPORT DATE July 1970	7a. TOTAL NO. OF PAGES 20	7b. NO. OF REFS 7
8a. CONTRACT OR GRANT NO b. PROJECT NO c. N/A d.	9a. ORIGINATOR'S REPORT NUMBER(S) MDC-TR-70-28 9b. OTHER REPORT NO(S) (Any other numbers that may be assigned this report) N/A	

10 DISTRIBUTION STATEMENT

This document has been cleared for public release and sale.
Its distribution is unlimited.

11 SUPPLEMENTARY NOTES n/a	12 SPONSORING MILITARY ACTIVITY Air Force Missile Development Center Air Force Systems Command Holloman Air Force Base, NM 88330

13. ABSTRACT

Some basic considerations governing rain erosion testing on the Holloman AFB Test Track are presented, and the equipment used for generating artificial rain is described to the extent relevant to charting the rain field. Some characteristics governing application of the IITRI rain counter are discussed and the analysis of data obtained by this instrument is outlined.

DD FORM 1 NOV 65 1473

Unclassified
Security Classification

Unclassified
Security Classification

14 KEY WORDS	LINK A ROLE	LINK A WT	LINK B ROLE	LINK B WT	LINK C ROLE	LINK C WT
Rain simulation						
Rain density						
Droplet size distribution						
Rain field calibration						
Wind sensitivity of rain field						

Unclassified
Security Classification