AD 713934

RDTR No. 170
1 September 1970

Conversion of Hobart Model C-100 Electric Mixer to Air Drive for Use In Mixing Pyrotechnic Compositions

Reproduced by
NATIONAL TECHNICAL
INFORMATION SERVICE
Springfield, Va. 22151

DDC
RECEIVED
NOV 4 1970
C

PREPARED BY

RESEARCH & DEVELOPMENT DEPARTMENT
Naval Ammunition Depot, Crane, Indiana

This document has been approved for public release and sale; its distribution is unlimited.

28

NAVAL AMMUNITION DEPOT
Crane, Indiana 47522

RDTR No. 170
1 September 1970

CONVERSION OF HOBART MODEL C-100 ELECTRIC MIXER TO AIR DRIVE FOR USE IN MIXING PYROTECHNIC COMPOSITIONS

By

PATRICK L. ARVIN

and

SHERMAN E. DARE

This report was reviewed for adequacy and technical accuracy by Robert E. Sloan, Mechanical Engineer.

Released

S. M. FASIG, Director
Research and Development Department

TABLE OF CONTENTS

Page

I. Introduction 1

II. Material Required 1

III. Removal of the Electric Motor and Electrical Components . 2

IV. Modification of Rotor Assembly 3

V. Modification of Gast Air Motor Model 6AM-NRV-11 4

VI. Assembly of the Air Motor to the Mixer 4

VII. The Gast Air Motor 6
A. Operation
B. Performance

VIII. Instructions for Operation and Care of the Model C-100 Hobart Mixer with Gast Air Motor 8

Figure 1. Motor Housing 11

Figure 2. Base and Pedestal Unit 12

Figure 3. Transmission Case Unit 13

Figure 4. Performance Data-Air Motor 14

Figure 5. Air Motor Selection Chart 15

Figure 6. Installation Diagram 16

Figure 7. Graph--Agitator Speed vs Air Motor Speed 17

RDC-3-250 - Shaft, Hobart Model C-100 Mixer, Modified

RDC-3-206 - Spacer

RDC-3-208 - Coupler

RDC-3-209 - Hobart Mixer Air Motor Adaptation (10 Qt)

RDC-3-207 - Support, Bearing

I. INTRODUCTION

A. During development of a Catalyst Generator at Naval Ammunition Depot, Crane, Indiana, a special need arose for a somewhat universal mixer to thoroughly blend pyrotechnic mixes of various types under special conditions.

The search for a mixer which could be used to mix these pyrotechnic mixes of approximately 10 lbs. in size, on a reproducible as well as a productive basis led to the Model C-100 (Planetary Action) Mixer manufactured by the Hobart Manufacturing Company, Troy, Ohio.

B. Preliminary testing of this mixer, with its planetary action, proved that it could meet the criteria already mentioned. One problem remained however, the Model C-100 Mixer is equipped from the factory with the standard type electrical motor and related equipment which would not permit the Model C-100 to be used to mix pyrotechnic mixes because of safety requirements.

Since this mixer provided the proper mixing action, it was suggested that the electrical motor and related controls (switches) be replaced with an air motor to adapt this mixer to meet the safety requirements involved.

The following is a description of how the Model C-100 Mixer was converted from electrically to air driven power.

II. MATERIAL REQUIRED

A. Hobart Model C-100 Mixer (with or without electrical motor). If the mixer is without the KFB-C-100 motor, Hobart Part No. P-22275-86 (Rotor Assembly) will also be needed. This should include the grease deflector (M-62489) and ball bearing (BB-16-1).

B. Gast Air Motor Model 6AM-NRU-11 (flange mounting)

C. Bearing (Norma-Hoffmann 204-KK) - .7874 inch I.D., 1.8504 inch O.D. (Two required - one should come with mixer)

D. Bearing Support (RDC-3-207)

E. Spacer (RDC-3-206)

F. Coupler (RDC-3-208)

G. 3/16" square key - length as required

H. Screw-Round Head #8-32 x 2 1/4" long (4 required)

I. Washer for #8 screw (4 required)

III. REMOVAL OF THE ELECTRIC MOTOR AND ELECTRICAL COMPONENTS

A. First remove the back bearing bracket. Part of the centrifugal switch will stay intact with this bracket (see Figure 1). Next remove the two wires from this part of the centrifugal switch. The rotor assembly is now ready to be extracted. This is done by pulling directly out while slowly turning the agitator shaft on the mixer. This assembly will include the rotor, shaft, ball bearing, grease deflector, worm gear, and part of the centrifugal starting switch (see Figure 1). Now remove the data plate on the back of the mixer (Part #18 - Figure 2). This permits access to the capacitor which is mounted inside. Disconnect the two wires from the capacitor and remove the capacitor and capacitor bracket. The two wires removed from the capacitor can now be pulled up into the motor housing to the stator assembly. Next disconnect the two wires from the plug-in cord. One wire is located at the manual switch (Part #15 - Figure 3) on the side of the machine next to the gear selector. This necessitates the removal of the shifter handle.

While the switch plate is off, disconnect the two wires and remove the switch. Also remove the ground wire from the housing inside.

The other wire from the input cord is connected to the stator. With this wire disconnected the stator is ready to be removed. Four studs on the outer perifery of the stator which held the back bearing plate are all that secures the stator. With these studs removed the stator can be removed by pulling directly out while tapping on the housing.

The only thing remaining to be removed is the input cord. Remove the fiber bushing and strain relief from the cord and pull the cord out through the hole in the housing.

IV. MODIFICATION OF ROTOR ASSEMBLY

A. The shaft of the rotor assembly which was extracted from the mixer must be modified to comply with Drawing No. RDC-3-250. This assembly includes the rotor, shaft, ball bearing, grease deflector, worm gear, and part of the centrifugal starting switch (see Figure 1). The rotor and the centrifugal switch must be pressed off the shaft. This may be done with or without the bearing and grease deflector in place on the shaft. Care should be taken so that the worm gear, bearing, grease deflector, and shaft are not damaged in this process. With the rotor and centrifugal switch off of the shaft, the shaft can be chucked in a lathe and modified.

V. MODIFICATION OF GAST AIR MOTOR MODEL 6AM-NRV-11

A. Modification of Gast Air Motor requires disassembly of the motor. The shaft must be shortened to comply with the .418 inch dimension appearing on Dwg. No. RDC-3-209. This requires measurement of the shaft extension before disassembly. This should comply with the drawing included with the performance data given which is supplied by the Gast Manufacturing Company. The keyway on this shaft must now be cut another .50 inches toward the rotor.

With the air motor apart, the front mounting flange can be modified. This requires that the outside diameter of 6 1/2 inches be machined down to a diameter of 5.995 inches, the same as the outside diameter of the bearing support (RDC-3-207). This permits entry into the mixer housing. The flange must also be faced to a thickness of .400 inches as seen in Dwg. No. RDC-3-209. This leaves a flat surface for the four mounting screws to secure the assembly.

VI. ASSEMBLY OF THE AIR MOTOR TO THE MIXER

A. First of all, press the ball bearing and grease deflector, if removed, back onto the modified worm gear shaft in the same position as previously occupied. Next, press a second ball bearing (Norma-Hoffmann 204-KK) in appropriate position into the bearing support (RDC-3 207) as shown in Dwg. No. RDC-3-209. This bearing and bearing support can now be pressed onto the other end of the

modified worm gear shaft. Only light pressure should be required to press either bearing into position. This assembly which should include the worm gear shaft, two ball bearings, the grease deflector, and the bearing support is ready for insertion into the mixer housing.

To insure proper position of the four outer holes in the bearing support, the studs which held the old stator assembly may be used for proper alignment. Turning of the agitator shaft on the mixer during insertion of the worm gear assembly helps draw the assembly firmly into place. Inspection through the hole by the shifter handle insures proper seating of the bearing support and also the inner bearing. The 3/16" square key and coupler (RDC-3-208) can now be added to the worm gear shaft with the relieved end outward (see RDC-3-209).

Next, the spacer (RDC-3-206) can be pressed onto the modified Gast Air Motor, as shown in Dwg. No. RDC-3-209. This need not be a press fit but the press fit helps to hold the assembly in place and insures proper positioning of the spacer in the final assembly. This air motor and spacer assembly is now ready for insertion into the mixer housing against the bearing support. The key-ways must be lined up prior to insertion by turning either of the two shafts. Sharp edges should be filed and may be filed to a slight taper to ease alignment. The four alignment studs may now be replaced by four 2 1/4 inch, #8-32 round head screws with flat washers. These four screws will secure the entire assembly (see RDC-3-209).

VII. THE GAST AIR MOTOR

A. Operation

The Gast Air Motor can be used in any position providing adequate lubrication is administered through an air line oiler and end thrust is kept to absolute minimum. For best results, assemble the air motor so that the inlet and exhaust ports are on top since this is where the oilers are for intermittent operation of the air motor. For continuous operation, the air line oiler must be used. Gast Manufacturing Company recommends use of their accessories for the Model 6AM Air Motor for longer life, proper operation, and dependability. These accessories include filter, regulator, lubricator, and lubricating oil, part numbers 4F103, 4R001G, 4L002, and AD220, respectively.

For moderate speeds (under 2,000 r.p.m.) or intermittent operation, 1 squirt of oil in bearing oilers per day will suffice. If the duty is continuous or speed is high, use an automatic air line oiler set to feed 1-3 drops per minute. The bearings will receive oil from the rotor chamber during automatic oiling. Lubrication is necessary for the bearings, shaft seals, and rust prevention. Excessive moisture in the air line can cause rust formation in motor and might also cause ice to form on muffler due to expansion of air through the motor. The moisture problem can be corrected by installing a moisture separator in the line and also by installing an aftercooler between the compressor and air receiver.

If the motor is sluggish or inefficient, try flushing with kerosene in well ventilated area. Disconnect the air line and muffler and add several teaspoonsful of kerosene. Rotate the shaft by hand in both directions for a few minutes, again connect the air line and apply pressure slowly until there is no trace of kerosene in exhaust air. (Keep face away from exhaust air) Check the muffler felts for grease, dirt, etc. If dirty, wash them in solvent. Replace the felts and connect the muffler. Relubricate the motor with a squirt of oil in the chamber and bearing oilers.

B. Performance

The speed of the air motor can be easily adjusted to operate from 300 to 3000 rpm. The Gast Model 6AM delivers up to 3 horsepower, as seen on the performance data sheet. This provides more than enough power to mix most pyrotechnic mixes since it replaces a 1/4 horsepower electrical motor previously in the mixer. Certain characteristics should be known about the air motor; however.

(1) Horsepower of an air motor is relative to RPM and to air line pressure.

(2) An air motor slows down when load increases at the same time its torque increases to a point where it matches the load. It will continue to provide increased torque all the way to stall condition. It can maintain the stalled condition without any harm to the motor.

(3) As the load is reduced, an air motor will increase speed and the torque will decrease to match the reduced load.

(4) When the load on an air motor is either increased or decreased, speed can be controlled by increasing or decreasing air pressure.

(5) Starting torque of an air motor is lower than running torque. While this provides smooth, no-shock starting, it is necessary to have additional airline pressure for starting under heavy loads.

(6) Air consumption increases as speed and air pressure are increased.

(7) It's simple to change horsepower and speed of an air motor by throttling the air inlet. Therefore, the best rule of thumb for selecting an air motor is to choose one that will provide the horsepower and torque required using only 2/3 of the line pressure available. The full airline pressure will then be available for overloads and starting.

This explains why the Model 6AM Air Motor was chosen to replace the low horsepower electric motor. The next smaller model is the 4AM which develops less than 1/4 horsepower at 300 RPM, as can be seen from the air motor selection chart.

VIII. INSTRUCTIONS FOR OPERATION AND CARE OF THE MODEL C-100 HOBART MIXER WITH GAST AIR MOTOR

A. As before with the electrical motor, the air motor must be stopped to shift the mixer to a different speed to prevent damage

to the gears in the mixer.

B. The transmission gearing is packed with a special grease that will last for several years. When grease is needed for replacement, it should be ordered from the Hobart Manufacturing Company. Lubricate the bowl slideways occasionally by applying a very small amount of oil with the tip of your finger. Only mineral oils are suitable for this type of lubrication. The polished drip cup is a safe-guard to prevent any lubricant that might work out of the planetary gearing from dropping into the bowl. Take off the drip cup (by removing the two screws) periodically and wipe it clean.

C. To raise the bowl, pull the long lever on the side of the mixer down until it catches in the detent which holds it in position. It is necessary to lower the bowl in order to change agitators and also makes the bowl more accessible for filling.

D. The replaced electric motor was operated at a speed of 1725 RPM. This gave the mixer three positive speeds for the agitator. These three speeds are as follows:

(GEAR)	(AGITATOR SPEED)
Low	144 RPM
Intermediate	258 RPM
High	450 RPM

The mixer now has a wide range of speeds since the air motor speed can be varied. Caution should be taken not to exceed the engineered design limits of the mixer. With the wide range (25-500 RPM)

of speeds for the agitator, there should be no reason to exceed the speed of the electrical motor, 1725 RPM, which was replaced. The graph of agitator speed vs air motor speed shows this speed range. As noted, this agitator speed does not include the planetary action of the agitator.

MOTOR

REPLACEMENT PARTS

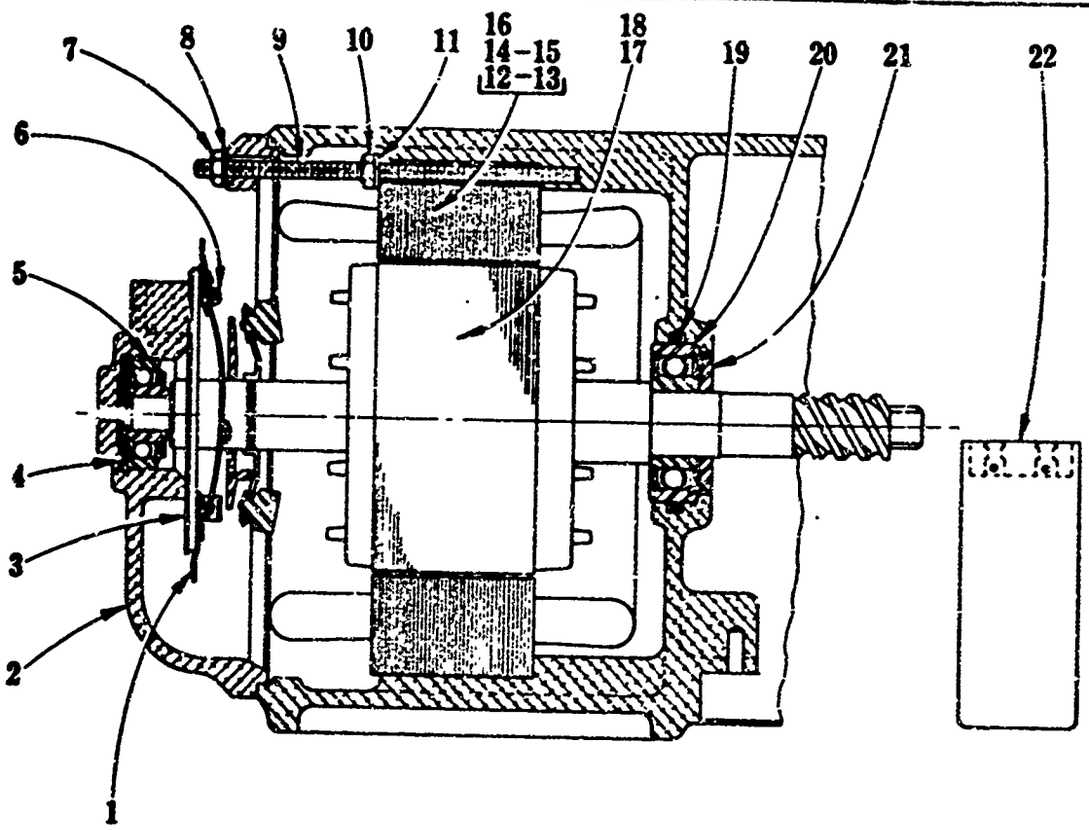

Type of Motor - KFB-C-100 **Motor ML16341-A,B,C,L,M**

Motor type and ML number are stamped on motor (sometimes under name plate).

When ordering motor replacement parts, in addition to motor Type and ML No., give Serial No., Model, ML, and all electrical data shown on machine name plate.

Illus. No.	Part No.	Name of Part	Amt.
1	M-74268-1	Switch - Starting (Stationary Part)	1
2	R-20647-2	Bracket - Bearing	1
3	M-78437	Insulator - Starting Switch	1
4	SL-2-2	Loading Spring - N. D. #S-12	2
5	BB-16-1	Ball Bearing - N. D. #C87011	1
6	SC-9-70	Mach. Screw - #6-32 x 1/4" Rd. Hd.	2
7	NS-9-12	Mach. Nut - #8-32 Hex	4
8	WL-7-6	Lock Washer - #8 Ext. Shakeproof	4
9	M-61671	Stator Stud - #8-32 x 4-5/8" Lg.	4
10	NS-9-12	Mach. Nut - #8-32 Hex	4
11	WS-2-15	Washer	4
12	P-65477-12-1	Stator Assy. (115V., 60 Cy., 1 Ph.)(Item #1 not included)	1
13	P-65477-12-2	Stator Assy. (208V., 60 Cy., 1 Ph.)(Item #1 not included)	1
14	P-65477-12-3	Stator Assy. (230V., 60 Cy., 1 Ph.)(Item #1 not included)	1
15	P-65477-13-1	Stator Assy. (115V., 50 Cy., 1 Ph.)(Item #1 not included)	1
16	P-65477-13-2	Stator Assy. (220V., 50 Cy., 1 Ph.)(Item #1 not included)	1
17	P-22275-96	Rotor Assy. (60 Cy.)	1
18	P-22275-97	Rotor Assy. (50 Cy.)	1
19	R-67500-20	"O" Ring	1
20	[illegible]-17-19	Ball Bearing - N. D. #Z99504	1
21	[illegible] 32489	Deflector - Grease	1
22	P-70487-7	Capacitor	1

FIG. 1

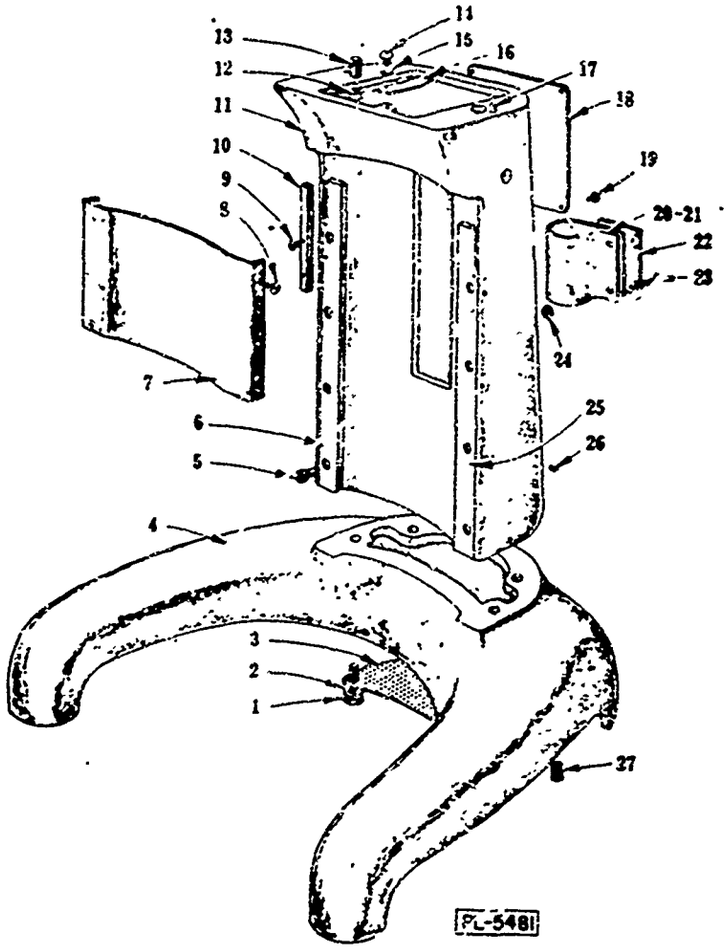

BASE AND PEDESTAL UNIT

ILLUS. PL-5481	PART NO.	NAME OF PART	AMT.
1	SC-36-27	Fin. Bolt - 5/16"-18 x 1" Hex Hd.	4
2	WL-3-44	Lock Washer - 5/16" x .125" x .075"	4
3	P-76507	Screen - Air	1
4	T-61650-1	Base	1
5	SC-40-51	Cap Screw - #8-32 x 1/2" Soc. Fil. Hd.	8
6	P-61638-1	Slideway - Left Hand	1
7	P-61635	Apron	1
8	SC-9-93	Mach. Screw - #6-32 x 1/4" Rd. Hd.	4
9	SC-7-23	Mach. Screw - #6-32 x 3/8" Rd. Hd.	4
10	M-61669	Block - Apron	2
11	T-61683-1	Pedestal	1
12	WL-4-2	Lock Washer - 3/8" x .136" x .070"	2
13	SC-36-57	Fin. Bolt - 3/8"-16 x 1-1/4" Hex Hd.	2
14	SC-7-41	Mach. Screw - #8-32 x 3/8" Rd. Hd.	1
15	WL-3-15	Lock. Washer - #8 x .047" x .031"	1
16	M-61649	Spring - Bowl Lift Detent	1
17	P-11800-88	Dowel	2
18	B-103012	Plate - Mach. Data & Back Cover (Give serial No. & elec. spec.)	1
19	SC-13-26	Mach. Screw - #6-32 x 1/4" Bind. Hd.	4
20	M-20334	Bracket - Capacitor (60 Cy.)	1
21	M-21227	Bracket - Capacitor (50 Cy.)	1
22	M-64228	Support - Capacitor Bracket	1
23	SC-15-36	Mach. Screw - #10-24 x 5/8" Oval Hd.	2
24	NS-9-21	Mach. Nut - #10-24 Hex	2
25	P-61639-1	Slideway - Right Hand	1
26	SC-47-71	Set Screw - #6-32 x 1/8" Soc. Hdls. Flat Pt.	2
27	SC-57-15	Set Screw - 3/8"-16 x 5/8" Hdls. Cup Pt.	4

FIG. 2

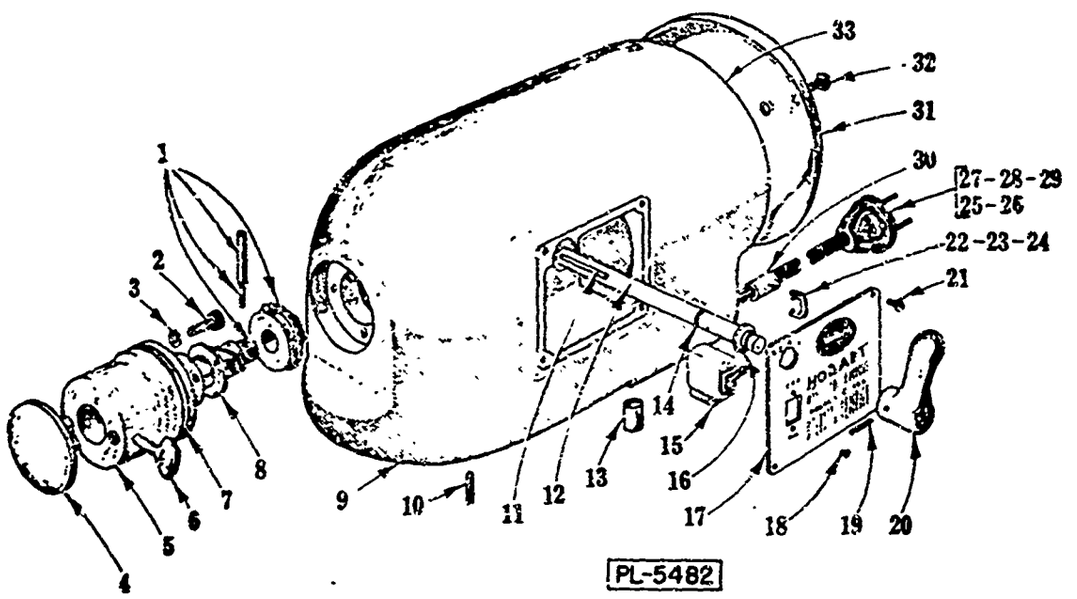

TRANSMISSION CASE UNIT

ILLUS. PL-5482	PART NO.	NAME OF PART	AMT.
1	M-65464	Square Drive Shaft & Zerol Bevel Gear Assy. (23T)	1
2	SC-40-33	Cap Screw - #10-24 x 7/8" Soc. Fil. Hd.	3
3	WL-3-23	Lock Washer - #10 x .070" x .056"	3
4	M-61838	Cover - Attachment Hub	1
5	P-61631	Hub - Attachment	1
6	M-5500	Thumb Screw	1
7	R-67500-20	"O" Ring	1
8	M-61667	Washer - Thrust	1
9	M-62628	Gear Case, Dowel & Bushing Sub-Assy. (Incls. Items #10 & 13)	1
10	P-11800-84	Dowel	1
11	R-12430-3	Key	1
12	M-61653	Rod - Shifter	1
13	M-61672	Bushing (Fiber)	1
14	R-67500-2	"O" Ring	1
15	M-61870	Switch	1
16	RR-4-4	Retaining Ring	1
17	B-102876	Plate - Switch	1
18	SC-9-87	Mach. Screw - #3-48 x 1/4" Rd. Hd.	2
19	PG-3-32	Groov-Pin - Type #1, 1/8" x 3/4"	1
20	M-61677	Handle - Shifter	1
21	SC-15-6	Mach Screw - #6-32 x 1/4" Oval Hd.	4
22	FE-6-15	Strain Relief (For item #23)	1
23	FE-6-16	Strain Relief (For item #26)	1
24	FE-6-32	Strain Relief (For items #27 & 28)	1
25	S-63335-12	Cord & Plug (2 Cond., Under 125 V.)	1
26	S-63335-17	Cord & Plug (2 Cond., 200-250 V.)	1
27	S-63335-30	Cord & Plug (3 Cond., Under 150 V.) (Ground)	1
28	S-63335-43	Cord & Plug (3 Cond., 200-250 V.) (Ground)	1
29	R-64898-4	Cord - Export	1
30	M-61672	Bushing (Fiber)	1
31	P-61634	Cover - Bearing Bracket	1
32	SC-10-13	Mach. Screw - #10-24 x 3/8" Truss Hd.	1
33	--------	Motor (see separate Motor Parts Sheet)	1

FIG. 3

MODEL

6AM

AIR MOTOR

Performance Data: Delivers up to 3 hp. Speed may be varied from 300 to 3000 rpm; hp is relative to rpm. Maximum recommended operating pressure—100 psi. Performance curves shown are for reversible models. Air consumption curves will be slightly lower for single rotation units.

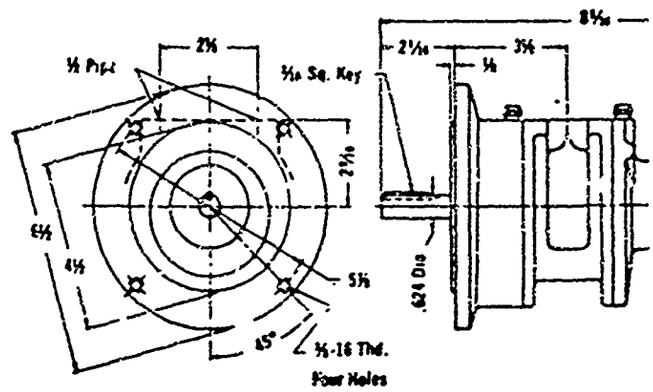

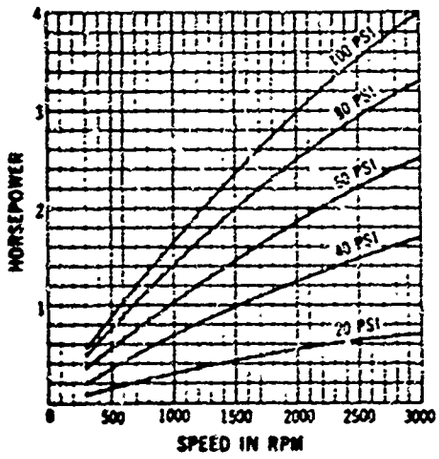

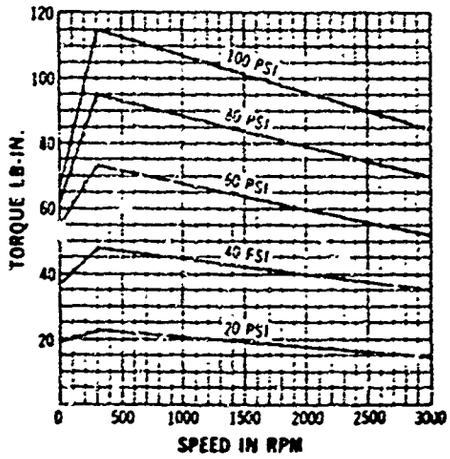

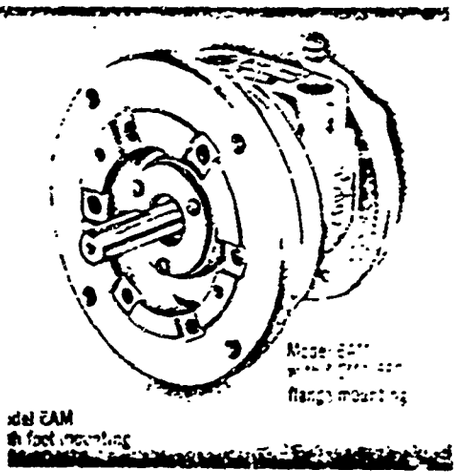

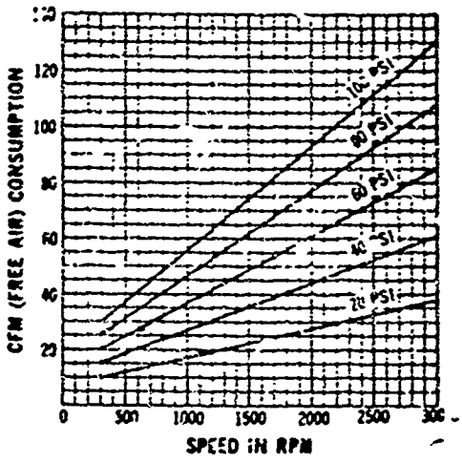

FIGURE 4

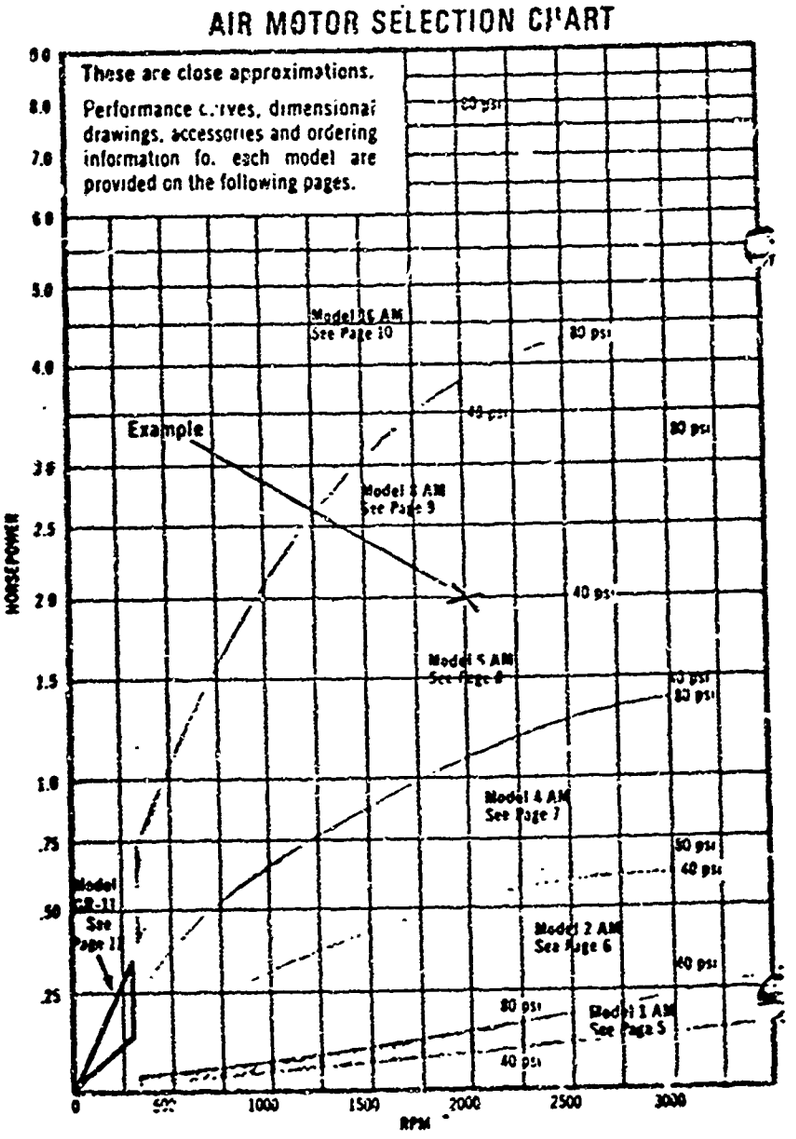
AIR MOTOR SELECTION CHART
These are close approximations.
Performance curves, dimensional drawings, accessories and ordering information for each model are provided on the following pages.
Example
Model 3 AM See Page 9
Model 4 AM See Page 7
Model 2 AM See Page 6
Model 1 AM See Page 5
80 psi
40 psi
50 psi
HORSEPOWER
RPM
0
1000
1500
2000
2500
3000
.25
.50
.75
1.0
1.5
2.0
2.5
3.0
4.0
5.0
7.0
8.0

FIGURE 5

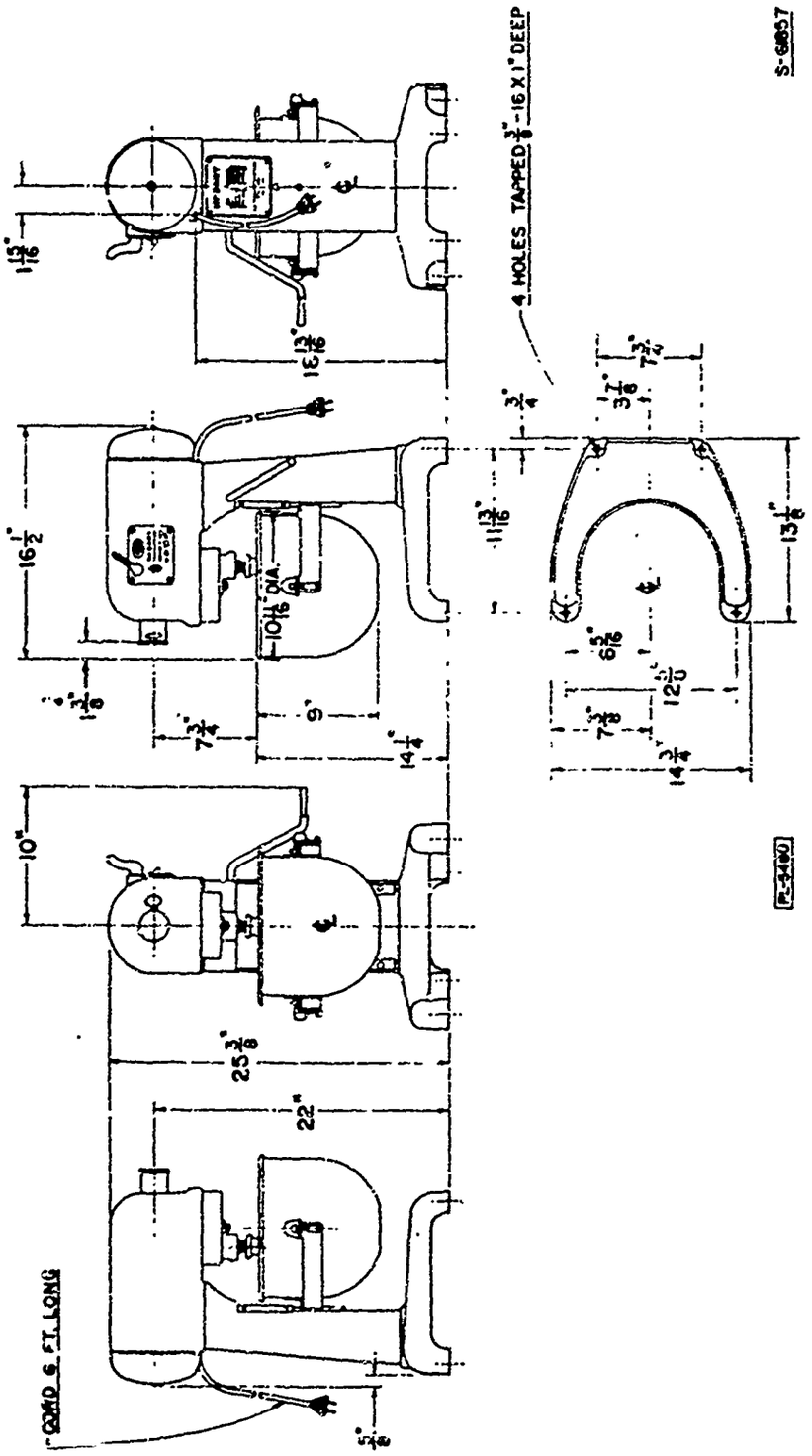

INSTALLATION DIAGRAM

FIGURE 6

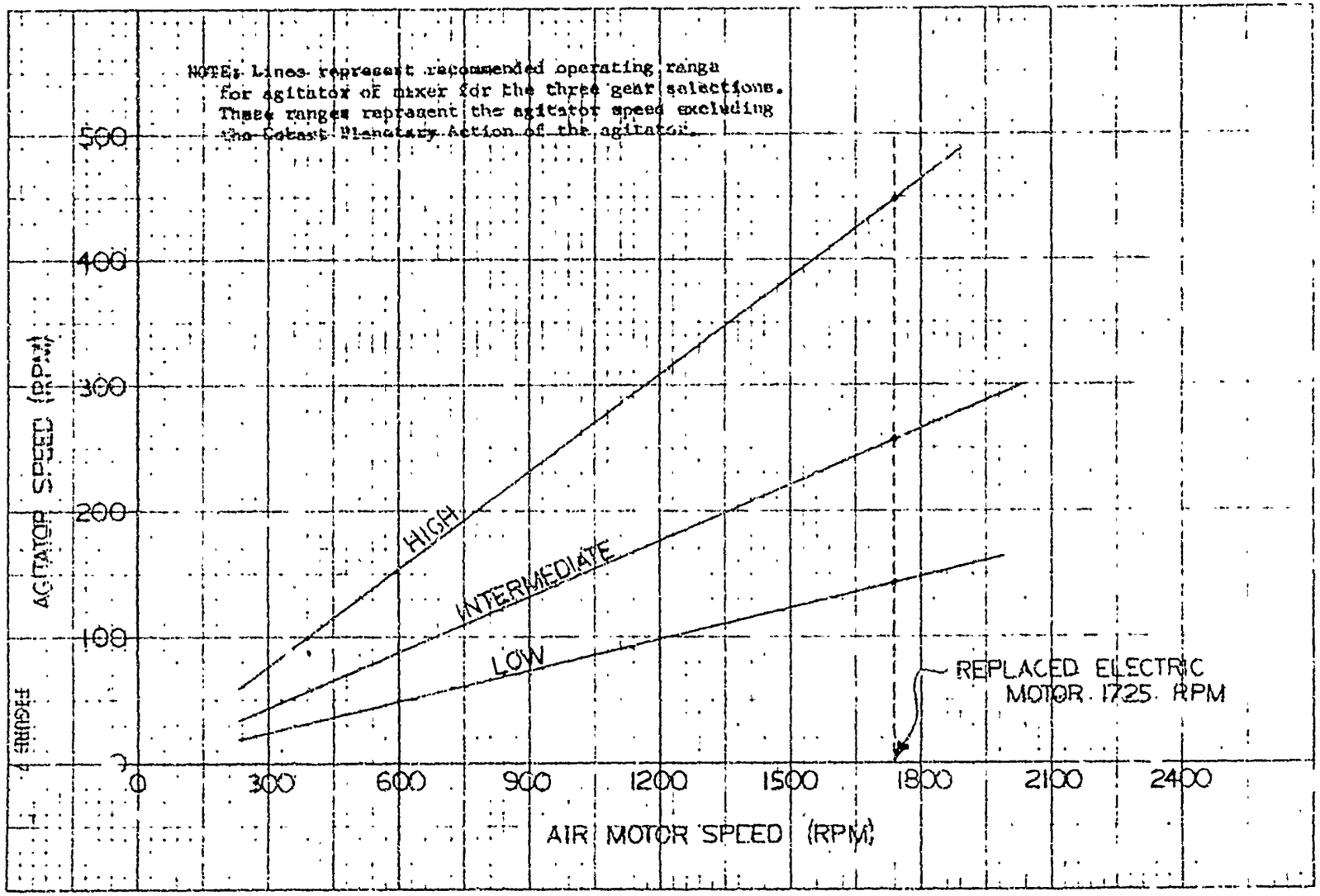
NOTE: Lines represent recommended operating range for agitator of mixer for the three gear selections. These ranges represent the agitator speed excluding the Cobast Planetary Action of the agitator.
AGITATOR SPEED (RPM)
500
400
300
200
100
0
300
600
900
1200
1500
1800
2100
2400
AIR MOTOR SPEED (RPM)
HIGH
INTERMEDIATE
LOW
REPLACED ELECTRIC MOTOR 1725 RPM

FIGURE 7

REVISIONS			
SYM.	DESCRIPTION	DATE	APPROVAL

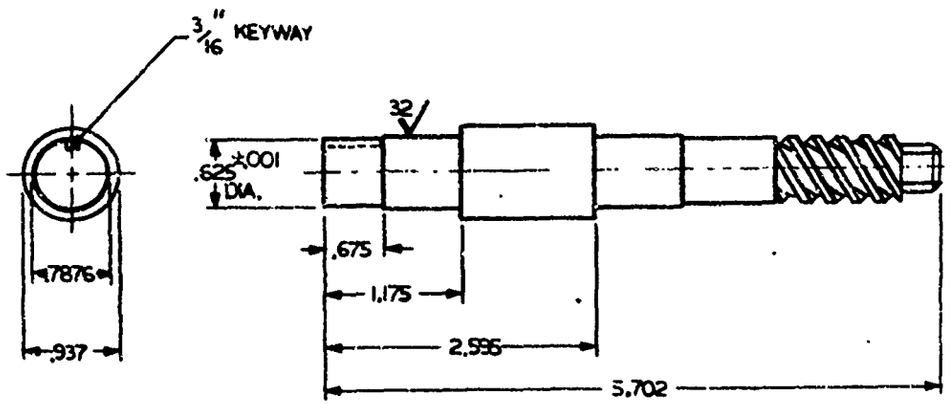

SECURITY INFORMATION

THIS DOCUMENT CONTAINS INFORMATION AFFECTING THE NATIONAL DEFENSE OF THE UNITED STATES WITHIN THE MEANING OF THE ESPIONAGE LAWS, TITLE 18 U.S.C., SECTIONS 793 AND 794. THE TRANSMISSION OR THE REVELATION OF ITS CONTENTS IN ANY MANNER TO AN UNAUTHORIZED PERSON IS PROHIBITED BY LAW.

NEXT ASSY.	USED ON
APPLICATION	

UNLESS OTHERWISE SPECIFIED
REMOVE ALL BURRS AND SHARP EDGES
DIMENSIONS ARE IN INCHES
TOLERANCE ON FRACTIONS ±
DECIMALS ± .005 ANGLES ±

DO NOT SCALE THIS DRAWING

MATERIAL

SPECIFICATIONS OF LATEST ISSUE APPLY

P.L.A. 8-19-64

U. S. NAVAL AMMUNITION DEPOT
CRANE, IND.
APPROVED 19
BY DIRECTION OF THE CHIEF OF BUREAU CAPT., USN

SHAFT, HOBART
MODEL C-100 MIXER,
MODIFIED

SCALE	UNIT WT.	JOB ORDER

BUREAU OF ORDNANCE
DEPARTMENT OF THE NAVY
U. S. NAVAL AMMUNITION DEPOT
CRANE, IND.
PYRO R & D DEPARTMENT

FUORD DRAWING NO.
RDC-3-250

REVISIONS			
LTR	DESCRIPTION	DATE	APPROVED

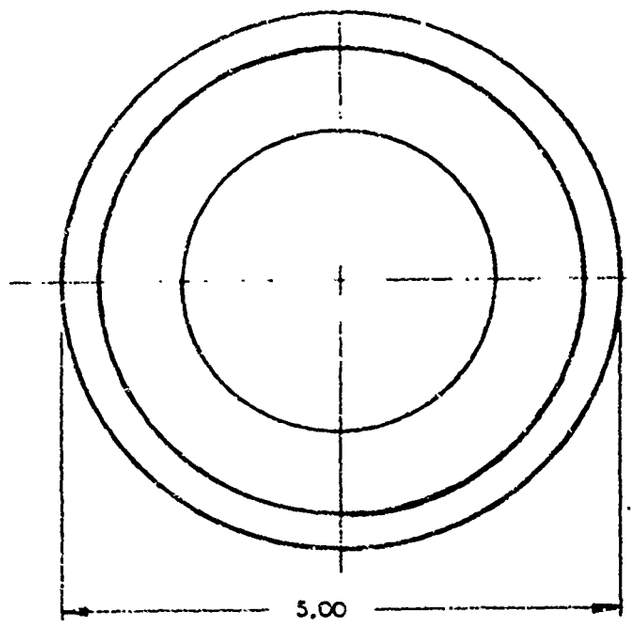

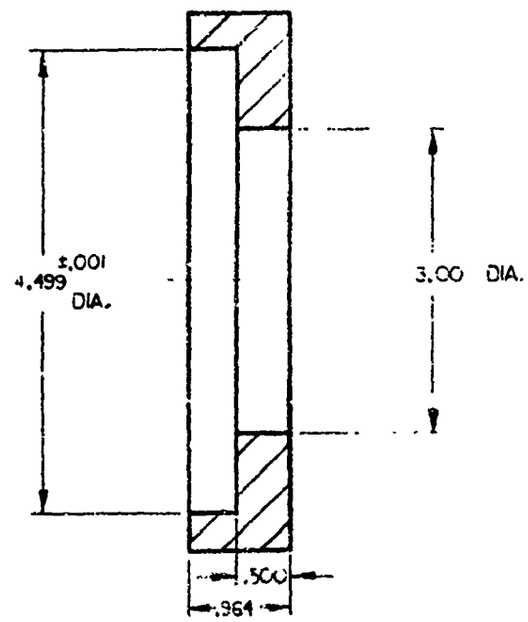

NEXT ASSY	USED ON
APPLICATION	

UNLESS OTHERWISE SPECIFIED DIMENSIONS ARE IN INCHES
TOLERANCES FRACTIONAL ±
2 PLACE DECIMALS ±.03
3 PLACE DECIMALS ±.005
4 PLACE DECIMALS ±.0005
ANGLES ±

DO NOT SCALE THIS DRAWING

MATERIAL:
ALUMINUM
6061-T

NAD CRANE

DESIGN EVALUATION		
INTERCHANGEABILITY		
PRODUCIBILITY		
PROD. METHODS		
PROJ. ENGR		
CHECKED		
PREPARED		

APPROVED FOR NADC

DEPARTMENT OF THE NAVY
NAVAL AIR SYSTEMS COMMAND
WASHINGTON, D.C. 20360

SPACER

SIZE	CODE IDENT	NAVAIR DWG NO
B	30003	RDC-3-206

SCALE | SHEET

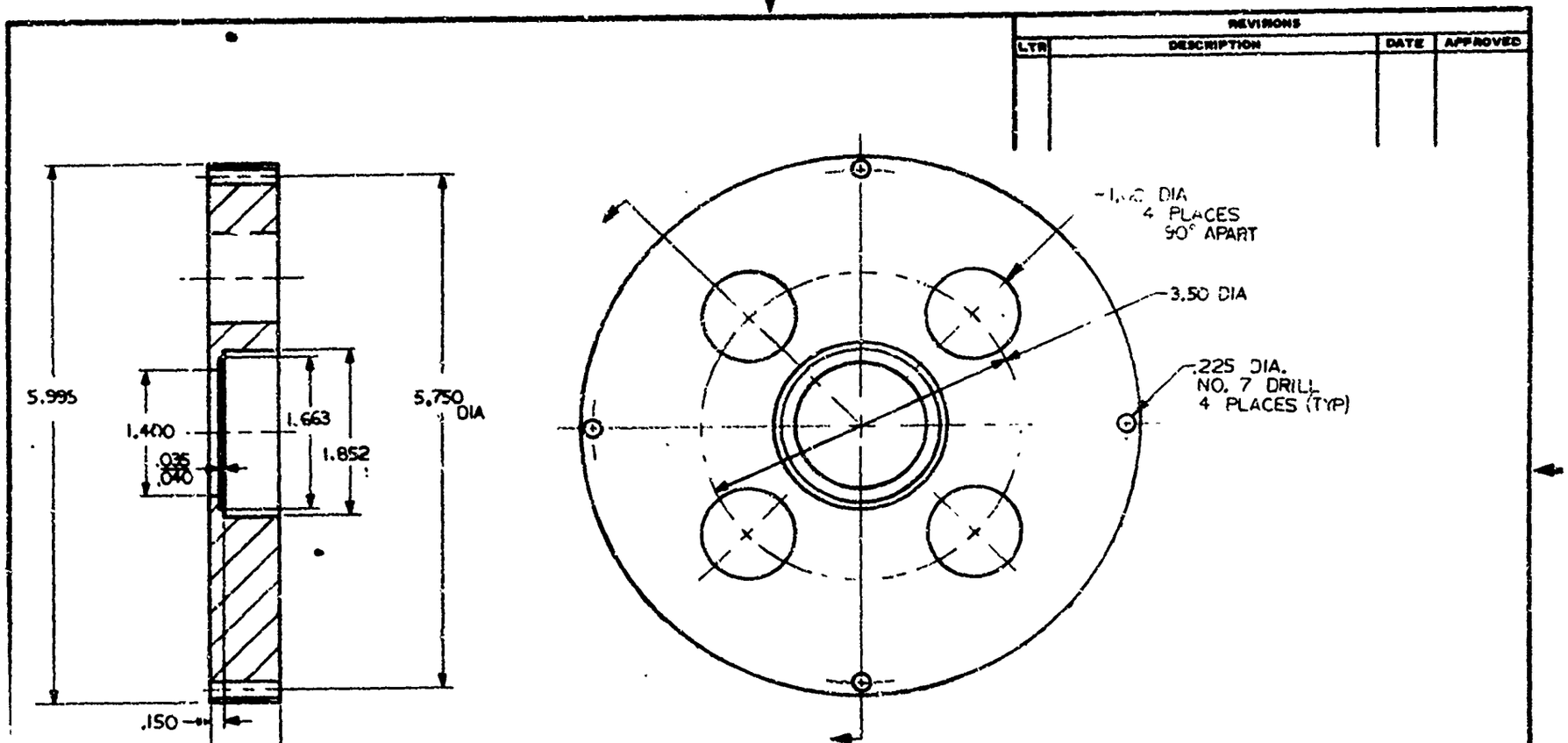

REVISIONS			
LTR	DESCRIPTION	DATE	APPROVED

UNLESS OTHERWISE SPECIFIED DIMENSIONS ARE IN INCHES
TOLERANCES FRACTIONAL ±
2 PLACE DECIMAL ±.002
3 PLACE DECIMAL ±.02
ANGLES ±

DO NOT SCALE THIS DRAWING

MATERIAL:
ALUMINUM
6061-T6

NAD CRANE

DESIGN EVALUATION	RD		
INSPECTABILITY	QA		
PRODUCIBILITY	PE		
PROD. REQ'MENTS	QA		
PROJ. ENG'R	RD		
CHECKED	RD		
PREPARED	RD	A. [illegible]	

APPROVED FOR NASC

DEPARTMENT OF THE NAVY
NAVAL AIR SYSTEMS COMMAND
WASHINGTON, D.C. 20360

SUPPORT, BEARING

SIZE	CODE IDENT.	NAVAIR DWG NO
B	30003	RDC-3-207

SCALE | SHEET

NEXT ASSY	USED ON
APPLICATION	

REVISIONS			
LTR	DESCRIPTION	DATE	APPROVED

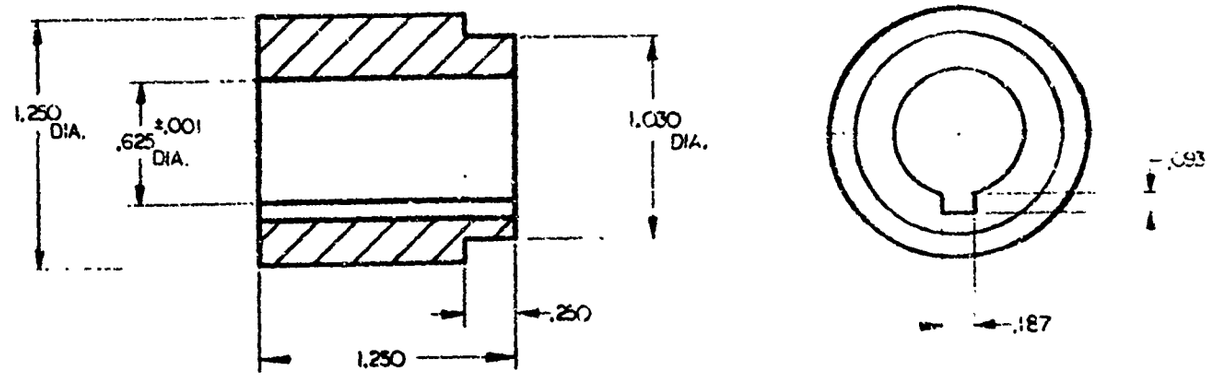

NEXT ASSY	USED ON
APPLICATION	

UNLESS OTHERWISE SPECIFIED DIMENSIONS ARE IN INCHES TOLERANCES: FRACTIONAL ±.005 2 PLACE DECIMAL ±.010 3 PLACE DECIMAL ±.005 ANGLES ±1°

DO NOT SCALE THIS DRAWING

MATERIAL: COLD ROLL STEEL 1030

NAD CRANE		
DESIGN EVALUATION	RP	
INSPECTABILITY	GA	
PRODUCIBILITY	WE	
PROD. METHODS	GR	
PROD. ENG'R	RG	
CHECKED	RO	
PREPARED	RO	

APPROVED FOR NASC

DEPARTMENT OF THE NAVY
NAVAL AIR SYSTEMS COMMAND
WASHINGTON, D.C. 20360

COUPLER

SIZE	CODE IDENT.	NAVAIR DWG NO
B	30003	RDC-3-208

SCALE | SHEET

REVISIONS				
ZONE	LTR	DESCRIPTION	DATE	APPRO.

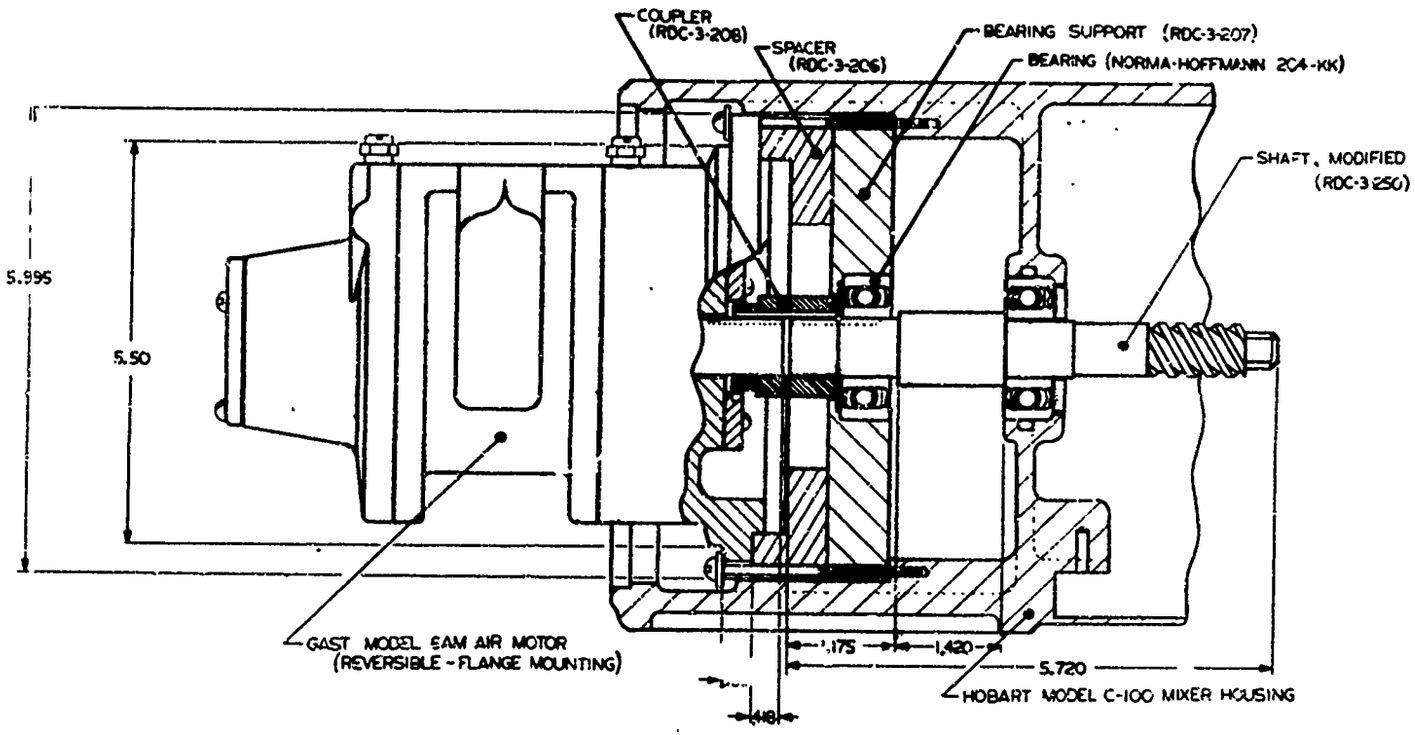

NEXT ASSY.	USED ON	APPLICATION	

UNLESS OTHERWISE SPECIFIED
DIMENSIONS ARE IN INCHES
TOLERANCES FRACTIONS ±
ANGLES ±
2 PLACE DECIMALS ±
3 PLACE DECIMALS ±
DO NOT SCALE THIS DRAWING
MATERIAL

NAD CRANE

DESIGN EVALUATION	RR	
INSPECTABILITY	QA	
PRODUCIBILITY	WG	
PROD. METHODS	QA	
PROJ. ENG'R	RD	
CHECKED	RD	
PREPARED	R. J. A.	9-24-67

APPROVED FOR NASC

DEPARTMENT OF THE NAVY
NAVAL AIR SYSTEMS COMMAND
WASHINGTON, D. C. 20360

HOBART MIXER
AIR MOTOR ADAPTATION
(10 QT.)

SIZE	CODE IDENT NO.	NAVAIR DWG NO.
C	30003	RDC-3-209

SCALE | SHEET OF

UNCLASSIFIED
Security Classification

DOCUMENT CONTROL DATA - R & D

Security classification of title, body of abstract and indexing annotation must be entered when the overall report is classified)

1. ORIGINATING ACTIVITY (Corporate author) Naval Ammunition Depot Crane, Indiana 47522	2a. REPORT SECURITY CLASSIFICATION UNCLASSIFIED 2b. GROUP

3. REPORT TITLE

Conversion of Hobart Model C-100 Electric Mixer to Air Drive for Use in Mixing Pyrotechnic Compositions

4. DESCRIPTIVE NOTES (*Type of report and inclusive dates*)

5. AUTHOR(S) (*First name, middle initial, last name*)

Patrick L. Arvin
Sherman E. Dare

6. REPORT DATE 1 September 1970	7a. TOTAL NO. OF PAGES 22	7b. NO. OF REFS 0
8a. CONTRACT OR GRANT NO b. PROJECT NO c. d.	9a. ORIGINATOR'S REPORT NUMBER(S) RDTR No. 170 9b. OTHER REPORT NO(S) (*Any other numbers that may be assigned this report*)	

10. DISTRIBUTION STATEMENT

Distribution of this document is unlimited.

11. SUPPLEMENTARY NOTES	12. SPONSORING MILITARY ACTIVITY

13. ABSTRACT

During development of a Catalyst Generator at Naval Ammunition Depot, Crane, Indiana, a special need arose for a somewhat universal mixer to thoroughly blend pyrotechnic mixes of various types under special conditions.

The search for a mixer which could be used to mix these pyrotechnic mixes of approximately 10 lbs. in size, on a reproducible as well as a productive basis, led to the Model C-100 (Planetary Action) Mixer manufactured by the Hobart Manufacturing Company, Troy, Ohio.

Preliminary testing of this mixer, with its planetary action, proved that it could meet the criteria already mentioned. One problem remained however, the Model C-100 Mixer is equipped from the factory with the standard type electrical motor and related equipment which would not permit the Model C-100 to be used to mix pyrotechnic mixes because of the safety requirements.

Since this mixer provided the proper mixing action, it was suggested that the electrical motor and related controls (switches) be replaced with an air motor to adapt this mixer to meet the safety requirements involved.

DD FORM 1 NOV 65 1473 (PAGE 1)

0102 014 6600

UNCLASSIFIED
Security Classification

UNCLASSIFIED
Security Classification

14 KEY WORDS	LINK A ROLE	LINK A WT	LINK B ROLE	LINK B WT	LINK C ROLE	LINK C WT
Hobart Model C-100 Mixer						
Centrifugal Switch						
Agitator						
Motor Housing						
Stator Assembly						
Rotor Assembly						
Gast Air Motor Model 6AM-NRV-11						
Bearing Support						
End Thrust						
Pyrotechnic Mixes						
Mixer						
Air Pressure						
Starting Torque						
Air Consumption						
Planetary Gearing						
Positive Speeds						

DD FORM 1 NOV 65 1473 (BACK)
(PAGE 2)

UNCLASSIFIED
Security Classification