AD 711586

NRL Memorandum Report 2156

Fracture Resistance Characteristics of Ti-6Al-2Mo and Ti-6Al-4V in 3 in. Thick Sections

R. W. Judy, Jr., R. W. Huber, R. J. Goode, and C. N. Freed

Strength of Metals Branch
Metallurgy Division

August 1970

D D C
RECEIVED
SEP 22 1970
C

Reproduced by the
CLEARINGHOUSE
for Federal Scientific & Technical
Information Springfield Va 22151

NAVAL RESEARCH LABORATORY
Washington, D.C.

This document has been approved for public release and sale; its distribution is unlimited.

21

CONTENTS

Abstract	ii
Problem Status	ii
Authorization	ii
INTRODUCTION	1
MATERIALS	1
FRACTURE TOUGHNESS TESTS	2
DISCUSSION OF RESULTS	3
INTERPRETATIONS OF FRACTURE TOUGHNESS MEASUREMENTS	4
CONCLUSIONS	5
ACKNOWLEDGMENT	7
REFERENCES	7

ABSTRACT

The fracture resistance properties of Ti-6Al-2Mo (6-2) and Ti-6Al-4V (6-4) alloys in 3 in. (7.6 cm) rolled plate section were investigated using the Dynamic Tear (DT) test and fracture mechanics tests, together with associated Ratio Analysis Diagram (RAD) procedures. The subject materials were low-oxygen (O_2 < 0.08 wt percent) alloys rolled from 12,000 lb. (5450 kg) ingots; the 6-2 alloy was beta forged and beta rolled from 2050°F (1120°C) while the 6-4 alloy was beta forged at 2050°F (1120°C) and alpha-beta rolled at 1750°F (970°C). Full-thickness DT tests and standard 1 in. DT tests of specimens at plate surface and center locations of both plates in the as-rolled condition revealed considerable anisotropy with respect to fracture resistance for both plates. A high degree of variation of toughness properties through the thickness of the as-rolled plates was also recorded; both plates featured higher toughness levels at the center than at the surfaces. Heat-treatment schedules developed for optimization of thinner plate sections did not improve the properties of either plate, though gradient effects were reduced. Indexing DT data and the valid K_{Ic} data on the RAD showed that the full-thickness DT test results and the K_{Ic} values correlated more closely with the tougher plate center properties than with the properties at the plate surfaces for both materials.

PROBLEM STATUS

This report completes one phase of the problem; work is continuing.

AUTHORIZATION

NRL Problem 63M01-25
Project 51-541-005-12393

FRACTURE RESISTANCE CHARACTERISTICS OF Ti-6Al-2Mo AND Ti-6Al-4V IN 3 IN. THICK SECTIONS

R. W. Judy, Jr., R. W. Huber, R. J. Goode, and C. N. Freed

INTRODUCTION

The fracture-safety of large, welded structures requires material having a high inherent resistance to propagation of cracks. This is because cracks or crack-like defects coupled with high residual stresses induced by welding, or due to geometrical discontinuities, can be expected to exist in the structure after fabrication. Such conditions often lead to catastrophic failure due to use of material featuring low crack tolerance characteristics. The most practical design recourse to preclude premature loss of such structures is the selection of a material with an adequate level of fracture resistance. For most engineering cases, adequate fracture resistance is commensurate with the ability of the material to undergo plastic straining in the presence of a flaw of the largest size expected in the structure without the occurrence of fracture.

Titanium alloys as a group have very good strength-to-density properties; in addition, some of these alloys possess high levels of fracture resistance. Other favorable properties of many titanium alloys include good weldability and high resistance to the effects of corrosion and stress-corrosion cracking. Recently, a considerable amount of work has been directed to definition of the fracture characteristics of 1 in. (2.5 cm) thick sections of high-strength titanium alloys. However, since projected applications of titanium alloys require sections sizes significantly greater than 1 in. (2.5 cm), a knowledge of the fracture characteristics of these thicker materials is imperative. This report presents a study of the fracture resistance characteristics of two principal high-strength titanium alloys in the form of commercially produced 3 in. (7.6 cm) thick rolled plate.

MATERIALS

Table 1 gives chemical compositions of the titanium alloys Ti-6Al-2Mo (6-2) and Ti-6Al-4V (6-4) studied in this investigation. A single 12,000 lb (5450 kg) ingot, 32 in. (81.3 cm) diameter, of each alloy was prepared by triple melting using the vacuum arc, consumable electrode process. Both ingots were then forged to discs approximately 80 in. (203 cm) diameter x 15 in. (38 cm) thick; the final forging starting temperature was 2050°F (1120°C), which is well above the beta transus for each alloy.

The final Ti-6Al-2Mo plate was then beta rolled in two stages to the final 3 in. (7.6 cm) thickness. The temperature at the start of rolling was the same as the forging temperature, 2050°F (1120°C). The first stage of rolling consisted of seventeen straight away passes that reduced the plate to an oval shape 7.5 in. (19 cm) thick by 78 in. (198 cm) x 152 in. (387 cm). The reduction per pass was 1/8 in. (3.2 mm) at the first pass and was gradually increased to 1/2 in. (12.7 mm) at the sixth pass. The surface temperature was 1640°F (895°C) at the last pass; the plate was relatively flat and smooth at this point in the rolling operation. For the second stage of rolling, the plate was reheated to 2050°F (1120°C) for one hour. The final reduction to 3 in. (7.6 cm) thickness was accomplished by rolling direction (cross-rolling) to decrease anisotropy; the reductions were 1/8 in. (3.2 mm) to 1/4 in. (6.4 mm) per pass except for the final pass, which was 0.1 in. (2.5 mm). The finished plate was generally oval in shape and had the dimensions of 3.14 in. (8 cm) thick x 151 in. (384 cm) x 181 in. (460 cm). Its surface was slightly crazed, and it was slightly bowed near the center.

The Ti-6Al-4V plate was rolled from 1750°F (970°C) (alpha plus beta) in two stages in the same manner as the Ti-6Al-2Mo alloy. To preclude excessive loading of the rolls, the maximum reduction for this material was 1/4 in. (6.4 mm) per pass. The first stage of rolling reduced the plate to a 7.8 in. (19.8 cm) thick x 80 in. (203 cm) x 150 in. (382 cm) oval, and the finishing temperature for this stage was 1470°F (800°C). The second stage consisted of reheating the plate to 1750°F (960°C) and then cross-rolling with 1/4 in. (6.4 mm) reductions per pass to a final size of 3.13 in. (80 cm) thick x 150 in. (382 cm) x 200 in. (508 cm). The finishing temperature was 1440°F (780°C). The resultant plate was flat and had a smooth surface.

The macro appearance of the cross section for each as-rolled plate is shown in Fig. 1. The microstructure for the 6-2 material was a typical transformed beta structure with some of the large original beta grain boundaries still discernible. The 6-4 material had a deformed alpha plus beta structure as a result of the lower rolling temperature.

FRACTURE TOUGHNESS TESTS

Plane Strain (K_{Ic})

Full-thickness bend specimens of each alloy were used to determine the K_{Ic} fracture toughness values for both 6-2 and 6-4 plates. The recommended practice outlined in Ref. 1 was followed for these studies.

The DT fracture toughness characteristics were investigated for the 6-2 and 6-4 materials in both the as-rolled and heat-treated conditions. A schematic illustration of the DT specimen is shown in Fig. 2 along with the dimensions of the specimen used. Full-thickness DT energy values were obtained for both RW and WR fracture orientations for the as-rolled plates; only the WR direction was investigated for the heat-treated materials. The surface and mid-thickness fracture toughness characteristics of the plate were also examined in the RW and WR fracture orientations for the as-rolled condition using the standard 1 in. (2.5 cm) DT specimen; only the WR orientation was studied for the heat-treated material.

The DT energy values obtained in the fracture toughness studies are presented in Tables 2 and 3 along with the corresponding tensile properties. The solution anneal and aging heat-treatment schedules noted in Tables 2 and 3 were carried out for 3 in. (7.6 cm) thick K_{Ic} and DT specimens in an argon atmosphere for all cases. For each condition noted, full-thickness K_{Ic} and DT specimens were heat treated at the same time. The 1 in. (2.5 cm) DT specimens and tensile specimens were machined from fractured K_{Ic} specimens. The code letters assigned each material in Tables 2 and 3 identify that material in subsequent figures of this report. The fracture surfaces of 3 in. (7.6 cm) and 1 in. (2.5 cm) WR DT specimens are shown in Fig. 3 for 6-2 and 6-4 plates in the as-rolled condition. The 6-2 material had a woody, fibrous appearance typical of beta processed material while the alpha plus beta forged 6-4 plate had a smooth, silky texture.

DISCUSSION OF RESULTS

The 1 in. (2.5 cm) DT results indicate that the plates for both alloys had a significant degree of fracture resistance anisotropy in the as-rolled condition. Also, the longitudinal tensile properties were lower at both mid-thickness and surface than corresponding transverse tensile values for as-rolled plate.

Both plates in the as-rolled condition exhibited considerable variation in fracture toughness at different locations with respect to thickness. Figure 4 illustrates the through-thickness variations as measured by a 1 in. (2.5 cm) DT test. For both alloys, the mid-thickness DT values were significantly higher than for the surface material. The trend for higher DT energies at the center of the plates was also accompanied by a general trend for lower tensile properties at the plate center compared to the surface material. The subsequent heat-treatments were ineffectual in eliminating this through-thickness variability

although they did tend to reduce the range of spread of surface to mid-thickness fracture resistance properties.

INTERPRETATIONS OF FRACTURE TOUGHNESS MEASUREMENTS

Direct interpretations of the 3 in. (7.6 cm) DT energy values in terms of expected critical flaw size-stress level relations to cause fracture are not possible at this time. However, the Ratio Analysis Diagram (RAD) procedure can be utilized for such interpretation of the full-thickness fracture toughness measurements by examining the results of the DT studies involving 1 in. (2.5 cm) specimens cut from the 3 in. (7.6 cm) plate. Alternatively, the flaw size-stress level relationships can be determined using the appropriate fracture mechanics expression and the K_{Ic} value for each plate.

The fracture toughness characteristics of the 6-2 material in as-rolled and various heat-treated conditions are displayed on the RAD in Fig. 5 as zonal regions, each of which encompasses all the 1 in. (2.5 cm) DT energy data for a given condition. The 3 in. (7.6 cm) DT values are also indexed to the RAD according to a preliminary relationship between the two DT tests. Only data for the WR orientation are shown on the RAD.

The DT data for both as-rolled plate and two of the heat-treated 6-2 materials fall in the transition region between the ratio 1.0 and ratio ∞, i.e., the through-the-thickness variations in fracture resistance cover this range. Note in Tables 2 and 3 that for both as-rolled plates, tensile specimens were tested at only one surface, while DT specimens from both surfaces were tested. The shape of the zone for the as-rolled 6-2 alloy results from plotting the surface DT energy value at the lower σ_{ys} value; the small error that may be introduced by this is insignificant in view of the wide range in through-thickness fracture toughness for this material. For an edge-cracked condition, plane strain fracture would begin in the highly constrained center of the plate. Since this material is toughest (near ∞ ratio) in this region, brittle fracture of the 3 in. (7.6 cm) section would be considered unlikely. The position of the DT energy zones significantly above the 1.0 ratio line would also indicate overall non-plane strain ductile type behavior. By appropriate solution anneal-and-aging heat-treatment schedules, overall fracture toughness levels above the ∞ ratio can be attained for 3 in. (7.6 cm) thick sections for the 6-2 alloy. However, investigation of heat-treatment variables would be required to determine if high (optimum) levels of toughness can be obtained in heavy sections for levels of yield strength above the 110-115 ksi (77-81 kgf/mm^2) range.

The fracture resistance properties of the as-rolled 6-4 plate, Fig. 6, also vary between ratios of 1.0 and ∞. As was the case for the 6-2 material, the center portion of the 6-4 plate had a higher level of fracture toughness than the as-rolled plate surfaces. For reasons described earlier, brittle fracture of this material would not be expected due to the high mid-thickness fracture toughness (∞ ratio). However, the heat treatments investigated for this material lowered the fracture toughness properties, particularly for the mid-thickness location, to the extent that brittle fracture could be expected. This is particularly true for the material over 120 ksi (84 kgf/mm^2) yield strength.

The values of K_{Ic} obtained for the heat-treated 6-2 and 6-4 plates are also shown in Figs. 5 and 6. The values obtained for the 1700°F (975°C) and 1650°F (899°C) solution annealed 6-2 materials (followed by 1100°F (590°C) age) were invalid due to non-plane strain conditions resulting from lack of through-thickness constraint (see Table 2) and thus are not presented on the RAD. The remainder of the K_{Ic} studies for both plates met the ASTM proposed requirements for plane strain fracture toughness testing. Calculations of critical surface flaw sizes (3:1 to 10:1 length to depth) at yield strength stress levels show that all the materials for which valid plane strain K_{Ic} values were obtained could be expected to fracture from flaws 0.1-0.3 in. (2.5-7.6 mm) deep. The K_{Ic} values were all lower than the expected values indicated by the DT energy zonal regions. However, studies currently underway aimed at refining the preliminary K_{Ic}-DT relationship developed for 1 in. (2.5 cm) thick titanium alloys indicate that a modest expansion of the RAD K_{Ic} scale relative to the DT may be necessary, which would effectively move the K_{Ic} data points to a position more consistent with the DT data. In any case, it is noteworthy that for 1 in. (2.5 cm) DT energy values corresponding to K_{Ic}/σ_{ys} values of about 1.0, valid K_{Ic} data were obtained for 3 in. (7.6 cm) thick sections. This would be predicted from the RAD interpretation of the 1 in. (2.5 cm) DT results.

CONCLUSIONS

The results obtained from this initial study on the fracture toughness characteristics of 3 in. (7.6 cm) thick Ti-6Al-2Mo and Ti-6Al-4V plate indicate the following:

1. The DT fracture toughness properties for both alloys indicated a considerable degree of anisotropy in the as-rolled

condition. (A study of the anisotropy in the heat-treated materials was beyond the scope of this investigation.) An increased amount of reduction in thickness by cross-rolling would be required to minimize this problem.

2. The plates of both alloys had large through-thickness fracture toughness gradients. For each alloy, the as-rolled and heat-treated plates featured higher DT energy values at the mid-thickness of the plate compared to the values obtained for the surfaces. In addition, the level of fracture toughness for each surface of a plate was substantially different. Consideration of all of these factors would indicate a need for further work concerning effects of processing factor variables on fracture toughness of heavy section plate for producing material with more uniform properties.

3. The most advanced method currently available for interpretation of fracture toughness data for the spectrum of titanium alloys is that provided by the Ratio Analysis Diagram procedure. Such an analysis of the 1 in. (2.5 cm) DT results of this study indicates that the range of fracture toughness of the as-rolled plate of each alloy extended from a ratio of 1.0 for surface location to about ∞ for the mid-thickness location. For this condition, the full-thickness DT results corresponded more closely to the 1 in. (2.5 cm) DT-RAD predictions of performance for the tougher mid-thickness material than for the surface material.

4. The heat treatments employed, which were modifications of those used for optimization of thinner sections, had the effect of reducing, but not eliminating, the extent of the through-thickness fracture toughness gradients. However, they did not result in major improvements in the materials and, in fact, were detrimental to the Ti-6Al-4V alloy. Further work is clearly needed to evolve heat treatments for effective optimization of 3 in. (7.6 cm) thick plates.

5. The full-thickness K_{Ic} results tended to index on the RAD at slightly lower K_{Ic}/σ_{ys} ratios than the DT data. However, valid K_{Ic} values were obtained only for those conditions where the RAD analysis of the 1 in. (2.5 cm) DT results indicated the possibility of brittle fracture for 3 in. (7.6 cm) thicknesses.

ACKNOWLEDGMENT

These investigations were supported in part by the Naval Ship Systems Command, Code 03422.

REFERENCES

1. ASTM Proposed Method of Test for Plane Strain Fracture Toughness of Metallic Materials, ASTM Standards, Part 31, May 1969, pp 1099-1114

2. Judy, Jr., R. W., Goode, R. J., and Huber, R. W., "Preliminary Comparison of 1 in. and 3 in. DT Test Results for Heavy Section Titanium Alloys," Report of NRL Progress, May 1970

TABLE I

CHEMICAL COMPOSITIONS OF TITANIUM ALLOY PLATES

	Al	Mo	V	Fe	C	O_2	N_2
R13	6.2	2.0	-	0.4	0.025	0.06	0.006
R14	6.0	-	4.1	0.5	0.023	0.07	0.008

TABLE 2

MECHANICAL PROPERTIES OF 3 IN. THICK Ti-6Al-2Mo PLATE

Orientation	Code*	Location	Dynamic Tear Energy (ft-lb) 3 in.	1 in.	YS (ksi)	UTS (ksi)	K_{Ic} (ksi$\sqrt{in.}$)	Remarks
RW		S	7200	1376	106.2	122.9		As Rolled
		℄		1734	111.1	124.3		
		S						
WR	A	S	5400	1448	120.0	129.1		As Rolled
		℄		1663	114.3	126.1		
		S		1022				
WR	B	S	6800	1166	113.3	125.7	99.6	1750°F/3 Hr/AC
		℄		1320	115.0	123.2		1100°F/4 Hr/WQ
WR	C	S	7375	1205	119.3	134.6	137.3**	1650°F/3 Hr/WQ
		℄		1706	117.8	133.0		1100°F/4 Hr/AC
WR	D	S	6800	1580	108.1	121.5	144.1**	1700°F/3 Hr/AC
		℄		1832	109.2	124.7		1100°F/3 Hr/WQ

*Code letters identify data in Fig. 5

**Invalid due to insufficient specimen thickness

TABLE 3

MECHANICAL PROPERTIES OF 3 IN. THICK Ti-6Al-4V PLATE

Orientation	Code*	Location	Dynamic Tear Energy (ft-lb) 3 in.	Dynamic Tear Energy (ft-lb) 1 in.	YS (ksi)	UTS (ksi)	K_{Ic} (ksi$\sqrt{in.}$)	Remarks
RW		S	8400	1948	115.8	122.8		As Rolled
		℄		2020	114.3	123.4		
		S						
WR	A	S	6000	1376	123.9	129.2		As Rolled
		℄		1663	117.8	126.5		
		S		1022				
WR	B	S	5500	986	112.7	123.2	99.6	1700°F/3 Hr/AC 1100°F/4 Hr/WQ
		℄		1120	112.6	123.8		
WR	C	S	5850	836	125.6	136.4	101	1750°F/3 Hr/WQ 1100°F/4 Hr/AC
		℄		1205	122.2	133.3		

*Code letters identify data in Fig. 6

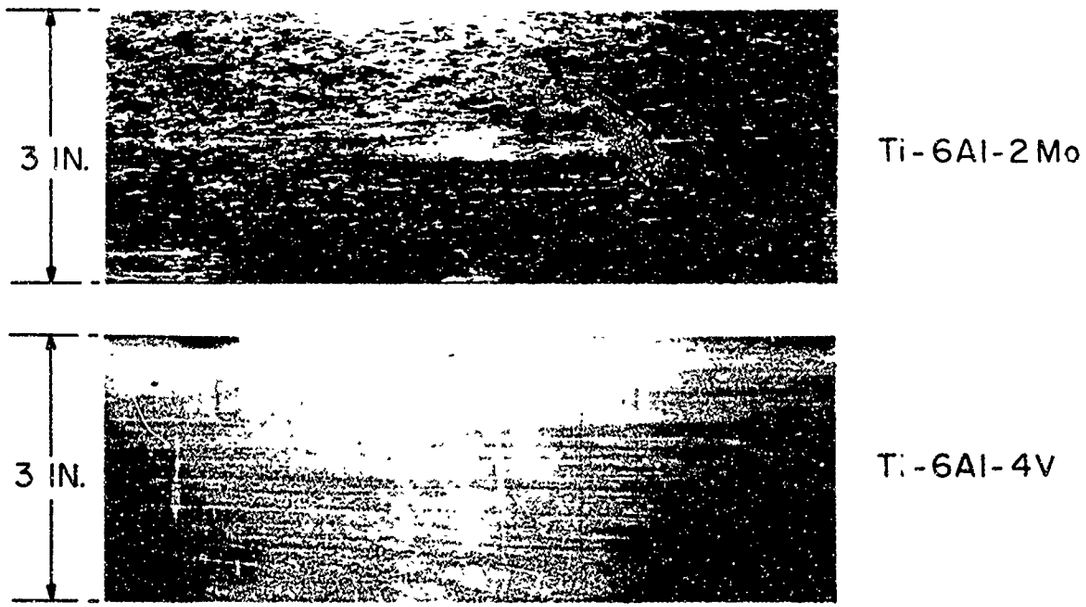

Fig. 1 - Macro appearance of 3 in. (7.6 cm) thick plates of (a) Ti-6A1-2Mo and (b) Ti-6A1-4V

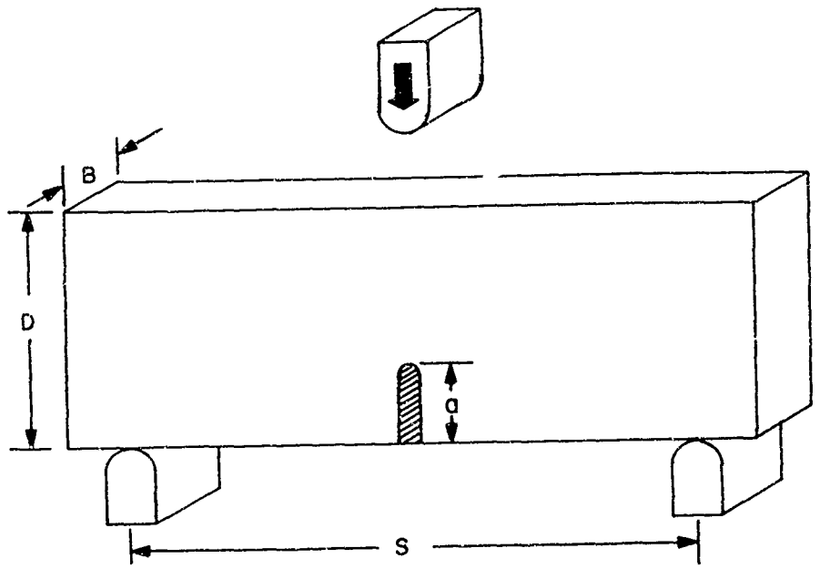

B		D		a		S	
(IN.)	(CM)	(IN.)	(CM)	(IN.)	(CM)	(IN.)	(CM)
1	2.5	4.75	12.1	1.75	4.4	16	40.8
3	7.6	8	20.3	3	7.6	24	61

Fig. 2 - Schematic illustration of the D'T test specimens

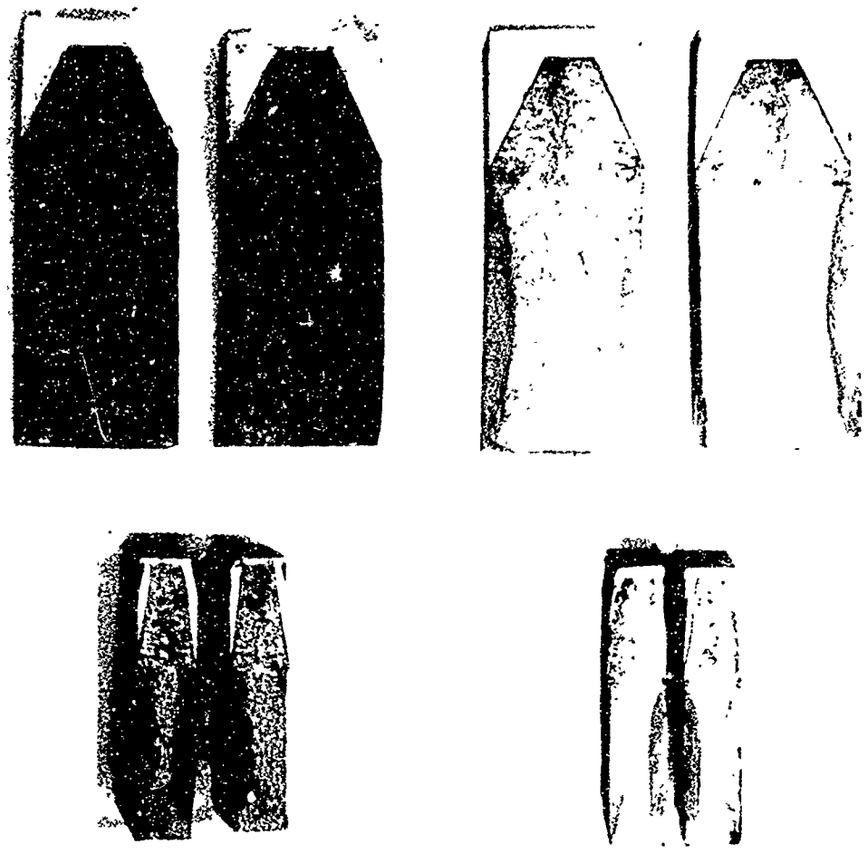

(a) (b)

Ti-6Al-2Mo Ti-6Al-4V

Fig. 3 - Fractured DT specimens of (a) 6-2 and (b) 6-4 materials

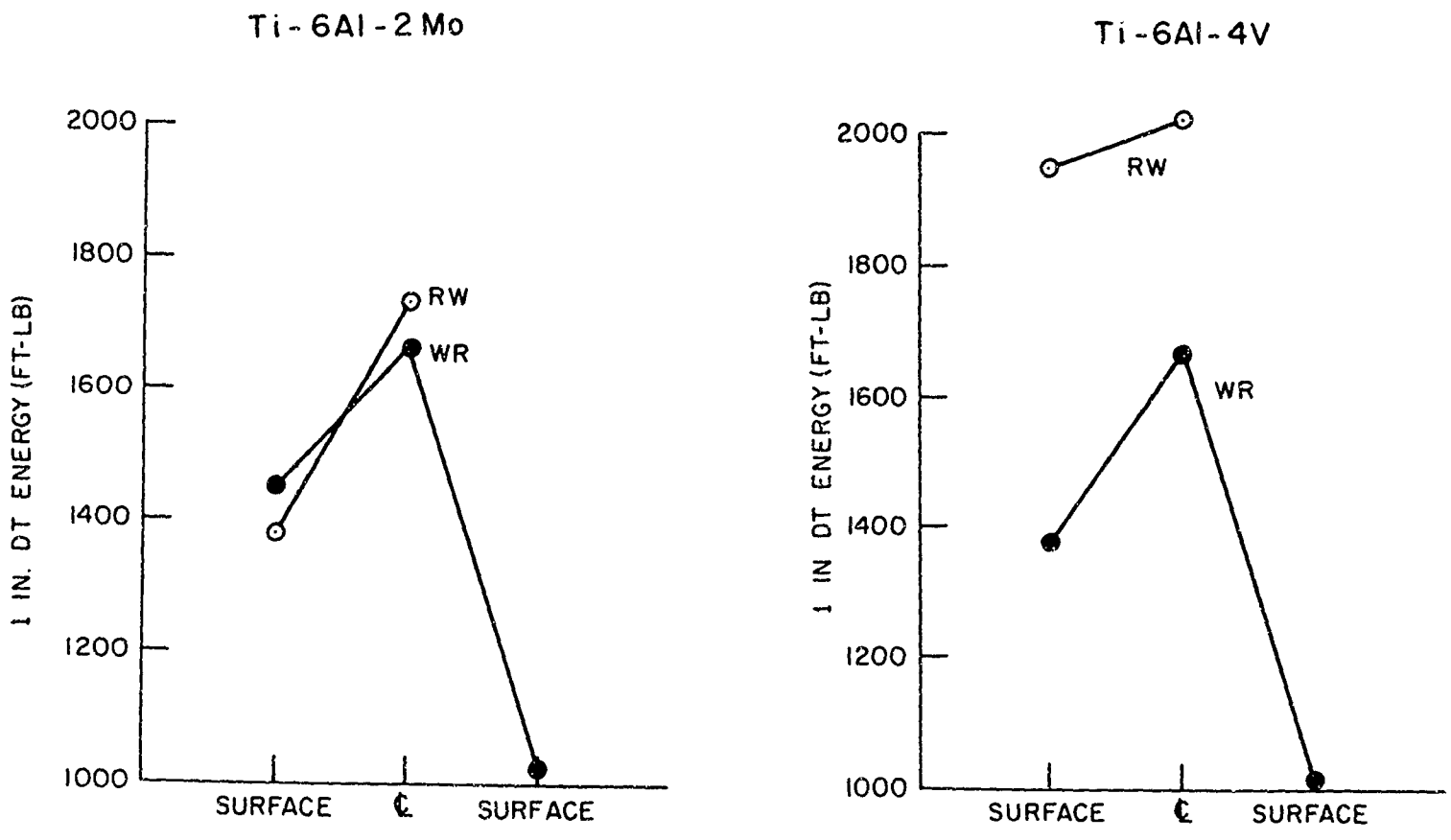

Fig. 4 - Illustration of the toughness gradient and anisotropy of 3 in. (7.6 cm) thick, as-rolled Ti-6Al-4V and Ti-6Al-2Mo plate

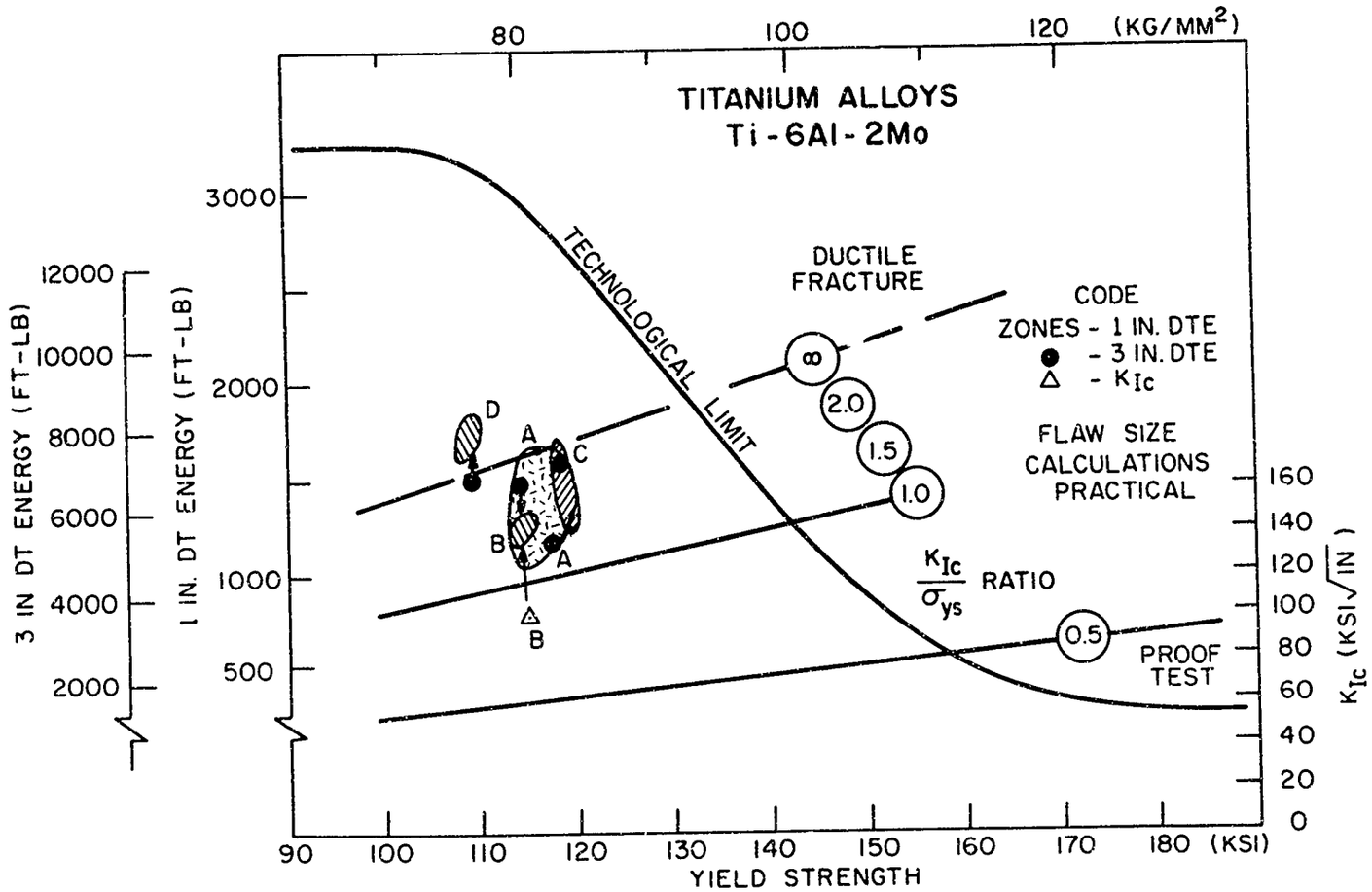

Fig. 5 - RAD analysis of fracture resistance for 3 in. (7.6 cm) thick 6-2 alloy in the as-rolled and heat-treated conditions

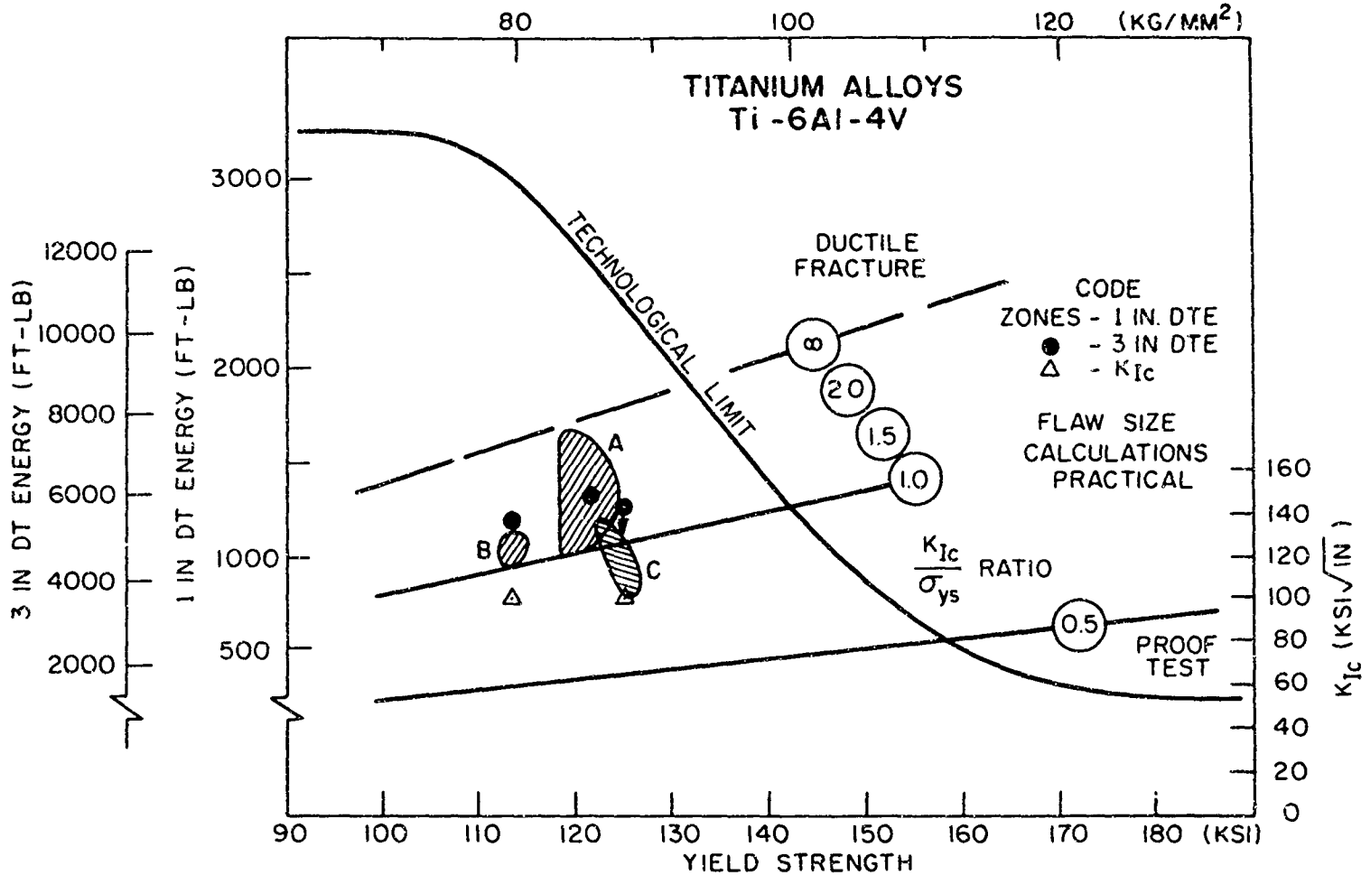

Fig. 6 - RAD analysis of fracture resistance for 3 in. (7.6 cm) thick 6-4 alloy in the as-rolled and heat-treated conditions

Security Classification

DOCUMENT CONTROL DATA - R & D

(Security classification of title, body of abstract and indexing annotation must be entered when the overall report is classified)

1 ORIGINATING ACTIVITY (Corporate author) Naval Research Laboratory Washington, D.C. 20390	2a. REPORT SECURITY CLASSIFICATION UNCLASSIFIED 2b. GROUP

3 REPORT TITLE

FRACTURE RESISTANCE CHARACTERISTICS OF Ti-6A-2Mo and Ti-6A1-4V IN 3 In. THICK SECTIONS

4 DESCRIPTIVE NOTES (Type of report and inclusive dates)

A final report on one phase of a continuing problem.

5 AUTHOR(S) (First name, middle initial, last name)

R. W. Judy, Jr., R. W. Huber, R. J. Goode, and C. N. Freed

6 REPORT DATE August 1970	7a. TOTAL NO OF PAGES 20	7b. NO OF REFS 2
8a. CONTRACT OR GRANT NO NRL Problem M01-25 b. PROJECT NO Project 51-541-005-12393 c. d.	9a. ORIGINATOR'S REPORT NUMBER(S) NRL Memorandum Report 2156 9b. OTHER REPORT NO(S) (Any other numbers that may be assigned this report)	

10 DISTRIBUTION STATEMENT

This document has been approved for public release and sale; its distribution is unlimited.

11 SUPPLEMENTARY NOTES	12 SPONSORING MILITARY ACTIVITY Naval Ship Systems Command Department of the Navy Washington, D.C. 20360

13 ABSTRACT

The fracture resistance properties of Ti-6A1-2Mo (6-2) and Ti-6A1-4V (6-4) alloys in 3 in. (7.6 cm) rolled plate section were investigated using the Dynamic Tear (DT) test and fracture mechanics tests, together with associated Ratio Analysis Diagram (RAD) procedures. The subject materials were low-oxygen (O_2 < 0.08 wt percent) alloys rolled from 12,000 lb. (5450 kg) ingots; the 6-2 alloy was beta forged and beta rolled from 2050°F (1120°C) while the 6-4 alloy was beta forged at 2050°F (1120°C) and alpha-beta rolled at 1750°F (970°C). Full-thickness DT tests and standard 1 in. DT tests of specimens at plate surface and center locations of both plates in the as-rolled condition revealed considerable anisotropy with respect to fracture resistance for both plates. A high degree of variation of toughness properties through the thickness of the as-rolled plates was also recorded; both plates featured higher toughness levels at the center than at the surfaces. Heat-treatment schedules developed for optimization of thinner plate sections did not improve the properties of either plate, though gradient effects were reduced. Indexing DT data and the valid K_{Ic} data on the RAD showed that the full-thickness DT test results and the K_{Ic} values correlated more closely with the tougher plate center properties than with the properties at the plate surfaces for both materials.

DD FORM 1473 (PAGE 1)

S/N 0101-807-6801

Security Classification

Security Classification

14 KEY WORDS	LINK A ROLE	LINK A WT	LINK B ROLE	LINK B WT	LINK C ROLE	LINK C WT
Ti-6Al-2 Mo alloy						
Ti-6Al-4V alloy						
Fracture resistance properties						
Dynamic tear test						
Fracture mechanics test						
Ratio analysis diagram procedures						

DD FORM 1 NOV 65 1473 (BACK)
(PAGE 2)

Security Classification