AD710738

NOLTR 70-36

THE SENSITIVITY OF SELECTED CONVENTIONAL AND HEAT RESISTANT EXPLOSIVES AT LOW TEMPERATURES

By
Calvin L. Scott

12 MAY 1970

NOL

UNITED STATES NAVAL ORDNANCE LABORATORY, WHITE OAK, MARYLAND

NOLTR 70-36

ATTENTION

This document has been approved for public release and sale, its distribution is unlimited.

DDC
RECEIVED
AUG 26 1970
C

Best Available Copy

THE SENSITIVITY OF SELECTED CONVENTIONAL AND HEAT RESISTANT EXPLOSIVES AT LOW TEMPERATURES

by:
Calvin L. Scott

ABSTRACT: The effects of temperature, confinement, and column diameter on the shock sensitivity of some heat resistant and conventional booster-type explosives were studied in a gap test arrangement. As expected, sensitivity decreased with decreasing temperature. Also, as expected, the changes in sensitivity with temperature were small compared to the sensitivity effects of confinement and charge diameter.

PUBLISHED 12 MAY 1970

U.S. NAVAL ORDNANCE LABORATORY
White Oak, Silver Spring, Maryland
Explosions Research Department

THE SENSITIVITY OF SELECTED CONVENTIONAL AND HEAT RESISTANT EXPLOSIVES AT LOW TEMPERATURES

This report presents results of a study of the effects of temperature, confinement, and column diameter on shock sensitivity of some heat resistant and conventional booster-type explosives. The work was performed under AIR TASK A35 532/UF17 353 502, Miniature Explosive Trains. The results of this work should be of interest to persons engaged in the design and development of miniature explosive components.

The identification of commercial materials implies no criticism or endorsement of them by the U. S. Naval Ordnance Laboratory.

GEORGE G. BALL
Captain, USN
Commander

I. Kabik
I. KABIK
By direction

CONTENTS

	Page
INTRODUCTION	1
EXPERIMENTAL PROCEDURE	2
RESULTS AND DISCUSSION	4
CONCLUSIONS	6
REFERENCES	7

TABLES

Table I	Mean Density of Explosives Loaded at 10 K psi	8
Table II	Summary of Data for Acceptors of Heavy Confinement	9
Table III	Shock Pressure Sensitivity for Acceptors of Light Wall Confinement	10

FIGURES

Fig. 1	Small Scale Gap Test Setups	11
Fig. 2	Small Scale Gap Test Setup for Acceptor Exposed to Low Temperature	12
Fig. 3	Small Scale Gap Test Setup for 0.25-inch O.D. Acceptor Cylinder	13
Fig. 4	Fifty Percent Shock Pressure Sensitivity	14

INTRODUCTION

1. Investigations[1,2] have shown that increased inputs are required to initiate explosives at low temperatures. For a donor-acceptor type explosive arrangement a smaller gap is necessary. For an electroexplosive device more electrical energy is required.

2. A recent development expected to increase adverse effects from reduced explosive sensitivity at low temperature is the need in cluster weapons for smaller explosive components. Since smaller explosive components will also have smaller explosive charge diameters, reliable propagation of detonation between these small charges could become critical.

3. This report presents the results of a study of how variation of temperature, wall confinement, and charge diameter of small charges affect explosive sensitivity. Both conventional explosives (CH-6 and tetryl) and heat resistant explosives (explosives stable up to 260°C) were investigated. It is expected that information obtained from this study will be useful in the design and development of miniature explosive components particularly those where explosive charge diameters as small as 0.050 inch might be employed.

EXPERIMENTAL PROCEDURE

4. Small scale gap test arrangements were used to determine the sensitivity of the explosives at reduced temperatures. The test arrangement used is shown in Fig. 1a. It is a modified version of the standardized small scale gap test.[3]

5. The donor-attenuator arrangement had been previously calibrated[4] so that the shock pressure at the end of the spacer was known. The acceptor explosives were subjected to different shock pressures by changing the thickness of the spacer between the donor and the acceptor. The following equation shows the relationship between the shock pressure, P at the end of the spacer, and the spacer thickness, X.

$$P(\text{kbar}) = 3.34 \text{ antilog } \{4.20 - 1.4 \, [\log X(\text{mils})]\}$$

This equation can be rearranged to

$$X = \text{antilog } (3.3741 - \frac{\log P}{1.4})$$

6. The Bruceton Technique[5] was used to obtain the critical shock pressure at the end of the spacer, i.e., that pressure needed to make 50% of the samples detonate. This shock pressure, uncorrected for impedance mismatch, was used as a measure of the sensitivity of the explosive.

7. The criterion for determining whether the acceptor explosive had been detonated was whether or not a dent was produced in the steel block.

8. Shock sensitivity of the acceptor explosive was determined at both room and low temperature using the following confinements:

(a) Heavy wall confinement (1.0 inch O.D. Brass Cylinders)
  (i) 0.100 inch charge diameter x 1.0 inch length
  (ii) 0.054 inch charge diameter x 1.0 inch length

(b) Light wall confinement (0.250 inch O.D. Brass Cylinders)
  (i) 0.100 inch charge diameter x 1.0 inch length.

9. The test explosive was loaded into the acceptor cylinder at 10 K psi. The individual explosive increments had about a 2 to 1 length to diameter ratio. Table I shows the mean density of the acceptor explosives so loaded. The densities of each group of explosive acceptors varied less than 4% of the mean density.

10. The explosives used in this study were tetryl, CH-6, DIPAM, TACOT-Z, HNS-II, and TATB. Some problems were encountered in loading certain explosives in the small diameters. For example, normally-specified 40/60 particle size tetryl was too large for use and had to be recrystallized to obtain a smaller particle size; DIPAM is very fluffy and was difficult to load in the small diameter columns.

11. One-inch O.D. acceptors as shown in Fig. 1(a) and 1(b) were first tested at room temperature. For low temperature testing, the acceptor cylinders were put in styrofoam jackets and were exposed for about 18 hours, to a -68° to -62°C temperature. Upon removal of an acceptor from the cold, it was assembled as in Fig. 2 and tested. The removal operation and the firing operation combined took less than 20 seconds. It was assumed that the temperature change of the explosive was negligible. Figure 3 shows the test set-up of a 0.25 inch O.D. acceptor cylinder assembled in a styrofoam jacket for testing at both the room and the cold temperature (except for CH-6 acceptors at -46°C).

RESULTS AND DISCUSSION

12. The shock pressures necessary for 50% high order initiation of tetryl, CH-6, HNS-II, DIPAM, TACOT-Z, and TATB in the heavy wall confinement test are shown in Table II. There was no case in which detonation in the acceptors was unattainable. The 0.054-inch charge diameter was, therefore, above the critical diameter for all explosives.

13. Table II shows that at 0.100-inch charge diameter at both room and low temperature the decreasing order of sensitivity is tetryl, HNS-II, CH-6, DIPAM, TACOT-Z, and TATB. Figure 4 shows the relative position of the explosives on a shock pressure vs gap thickness curve. The order holds both for the heavy and light confinement (Table III) at both room and cold temperatures.

14. For the 0.054-inch charge diameter, the decreasing sensitivity order was now observed to be HNS-II, tetryl, DIPAM, CH-6, TACOT-Z, and TATB for room temperature and tetryl, HNS-II, DIPAM, TACOT-Z, CH-6, and TATB for the cold temperature. The apparent anomaly of HNS-II being more sensitive than tetryl at room temperature at the 0.054-inch charge diameter is difficult to explain. The mean shock initiating pressures of HNS-II and of tetryl are within about 1 kbar. The limited amount of data used to determine the mean pressures is insufficient to conclusively state whether HNS-II or tetryl is more sensitive.

15. Generally, increased shock initiating pressure was necessary as the temperature decreased for explosives with the same charge diameter at heavy confinement. At the 0.100-inch charge diameter, the average increase in the 50% shock initiating pressure for all explosives was about 18%. The increase in 50% shock initiating pressure range was 14 to 23%. At the 0.054-inch charge diameter, CH-6, HNS-II, DIPAM, and TATB showed an average increase in the shock initiating pressure of about 23% with a range of 16 to 33%. TACOT-Z showed a 4% increase while tetryl showed no increase. More data will have to be obtained on the latter two explosives to say with certainty that at a very small charge diameter, these two explosives are somewhat insensitive to temperature decreases.

16. Table II also shows that at room temperature, as the charge diameter is decreased, the 50% shock initiating pressure in increased. The 50% shock initiating pressure for tetryl and CH-6 increased 26 and 31%, respectively, whereas the heat resistant explosives showed a shock pressure increase of only 11% for HNS-II with essentially no increase observed for DIPAM, TACOT-Z, and TATB.

17. When the above experiments were repeated in the cold, the 50% shock initiating pressure increased for all the explosives except for DIPAM and TACOT-Z. For these two explosives, there was a very slight decrease in the shock initiating pressure. Again, it seems that some heat resistant explosives maintain the same sensitivity over a wide temperature range.

18. Table III shows the 50% shock initiating pressures for the various explosives in a 0.100 charge diameter using less confinement. First, it must be noted that lesser confinement alone caused a decrease in the sensitivity of the explosives at both room and cold temperature (Table II vs. Table III). The sensitivity decrease in terms of initiation shock pressure increase was 16 to 31% for the explosives at room temperature. The shock pressure percentage increases are shown in the parentheses of Column I, Table III. At cold temperature, shock pressure increased, but a quantitative estimate is not given for comparison since the exact temperature at the time of testing was not known.

19. Table III also shows, in all cases, that the mean shock initiating pressure increased as the temperature decreased. The explosives, except for HNS-II, showed about 3-10% increase in initiation shock pressure. The shock pressure increase was about 19% for HNS-II. The shock pressure percentage increases are shown in the parentheses of Column II, Table III. This data and that of paragraph 18 show clearly the change in sensitivity of explosives due to changes in confinement and temperature.

CONCLUSIONS

20. Heat resistant explosives show a lesser decrease in sensitivity when going to smaller charge diameters or to lesser confinement than do conventional explosives.

21. Both high temperature resistant and conventional explosives show about the same sensitivity change with temperature.

22. Significantly reduced sensitivity can be expected of an explosive when used at charge diameters considerably smaller than 0.10-inch.

23. The conclusions of paragraphs 20 and 21 were arrived at on the basis of the few explosives studied. It is unknown whether or not these observations would hold, in general, if the scope of the investigation were widened to include many more explosives.

REFERENCES

1. Shainheit, L. and Wagner, R. L., "Determination of the Feasibility of Initiating PB-RDX Pellets Using the M46 Stab Detonator", PATR 3110 (September 1963).

2. Shainheit, L., "Evaluation of Low Temperature Procedure for Electroexplosive Devices", PATR 3139 (March 1964).

3. Ayres, J. N., "Standardization of the Small Scale Gap Test Used to Measure the Sensitivity of Explosives", NAVWEPS Rpt. 7342 (16 January 1961).

4. Price, D. and Liddiard, T., "The Small Scale Gap Test Calibration and Comparison with the Larger Scale Gap Test", NOLTR 66-87 (7 July 1966).

5. AMP Rpt. No. 101.1R, SRG-P No. 40, "Statistical Analysis for a New Procedure in Sensitivity Experiments", (July 1944).

6. NOLR 1111, Ordnance Explosive Train Designers' Handbook, (April 1952).

TABLE I

MEAN DENSITY OF EXPLOSIVES LOADED AT 10 K PSI

Explosives	Cylinder Dia. (inch)	Density (g/cc)
Tetryl	0.054	1.47
	0.100	1.47
	0.100 L	1.45
CH-6	0.054	1.58
	0.100	1.56
	0.100 L	1.61
HNS-II	0.054	1.45
	0.100	1.44
	0.100 L	1.43
DIPAM	0.054	1.30
	0.100	1.30
	0.100 L	1.28
TACOT-Z	0.054	1.19
	0.100	1.17
	0.100 L	1.18
TATB	0.054	1.65
	0.100	1.65
	0.100 L	1.66

L, approximately 0.075 inch wall thickness; 0.46 inch wall thickness for others.

TABLE II

SUMMARY OF DATA FOR ACCEPTORS OF HEAVY CONFINEMENT*

Explosive		Room Temperature Charge Diameter (inch) 0.100	Room Temperature Charge Diameter (inch) 0.054	Cold Temperature Charge Diameter (inch) 0.100	Cold Temperature Charge Diameter (inch) 0.054
Tetryl	N	25	26	29	16
	log $\overline{P}$	1.1464	1.2473	1.2015	1.2435
	S	0.0086	0.0478	0.0448	0.0476
	CV	0.75	3.83	3.73	3.83
	P	14.01	17.67	15.90	17.52
CH-6	N	50	25	50	24
	log $\overline{P}$	1.1842	1.3035	1.2657	1.3987
	S	0.0106	0.0173	0.0397	0.0753
	CV	0.90	1.33	3.14	5.38
	P	15.28	20.07	18.44	25.04
HNS-II	N	46	25	44	27
	log $\overline{P}$	1.1730	1.2179	1.2377	1.2930
	S	0.0103	0.0098	0.0142	0.0340
	CV	0.88	0.80	1.15	2.63
	P	14.89	16.52	17.29	19.63
DIPAM	N	21	18	26	18
	log $\overline{P}$	1.2535	1.2521	1.3427	1.3182
	S	0.0167	0.0112	0.0242	0.0473
	CV	1.33	0.89	1.80	3.59
	P	17.93	17.87	22.01	20.81
TACOT-Z	N	27	25	27	27
	log $\overline{P}$	1.3226	1.3317	1.3845	1.3483
	S	0.0135	0.0119	0.0114	0.0378
	CV	1.02	0.89	0.82	2.80
	P	21.02	21.46	24.24	22.30
TATB	N	25	25	27	24
	log $\overline{P}$	1.6971	1.7035	1.7837	1.8243
	S	0.0182	0.0172	0.0221	0.0256
	CV	1.07	1.01	1.24	1.40
	P	49.79	50.53	60.77	66.72

N=Sample Size; log $\overline{P}$=Log of Shock Pressure (kbars); S=Standard Deviation (kbar); CV=Coefficient of Variation (Percent); P=Shock Pressure (kbars)
*Wall thickness of approximately 0.46 inch.

TABLE III

SHOCK PRESSURE SENSITIVITY FOR ACCEPTORS OF LIGHT WALL CONFINEMENT*

Explosive	Shock Pressure (kbars)** Room Temperature Test	Low Temperature*** Test
Tetryl	17.58 (25%)#	19.28 (10%)‡
CH-6 ***	20.07 (31%)	21.75 (8%)
HNS-II	17.65 (19%)	21.03 (19%)
DIPAM	21.41 (19%)	23.26 (9%)
TACOT-Z	25.28 (20%)	26.07 (3%)
TATB	57.78 (16%)	61.19 (6%)

*0.075-inch wall thickness; 0.100-inch charge diameter

**25 samples in Bruceton run

***Cold box temperature approximately -65°C except for CH-6 at -46°C

#Percentage increase in shock pressure sensitivity due to decrease in confinement (see Column I, Table II)

‡Percentage increase in shock pressure sensitivity due to decrease in temperature (see Column I, Table III)

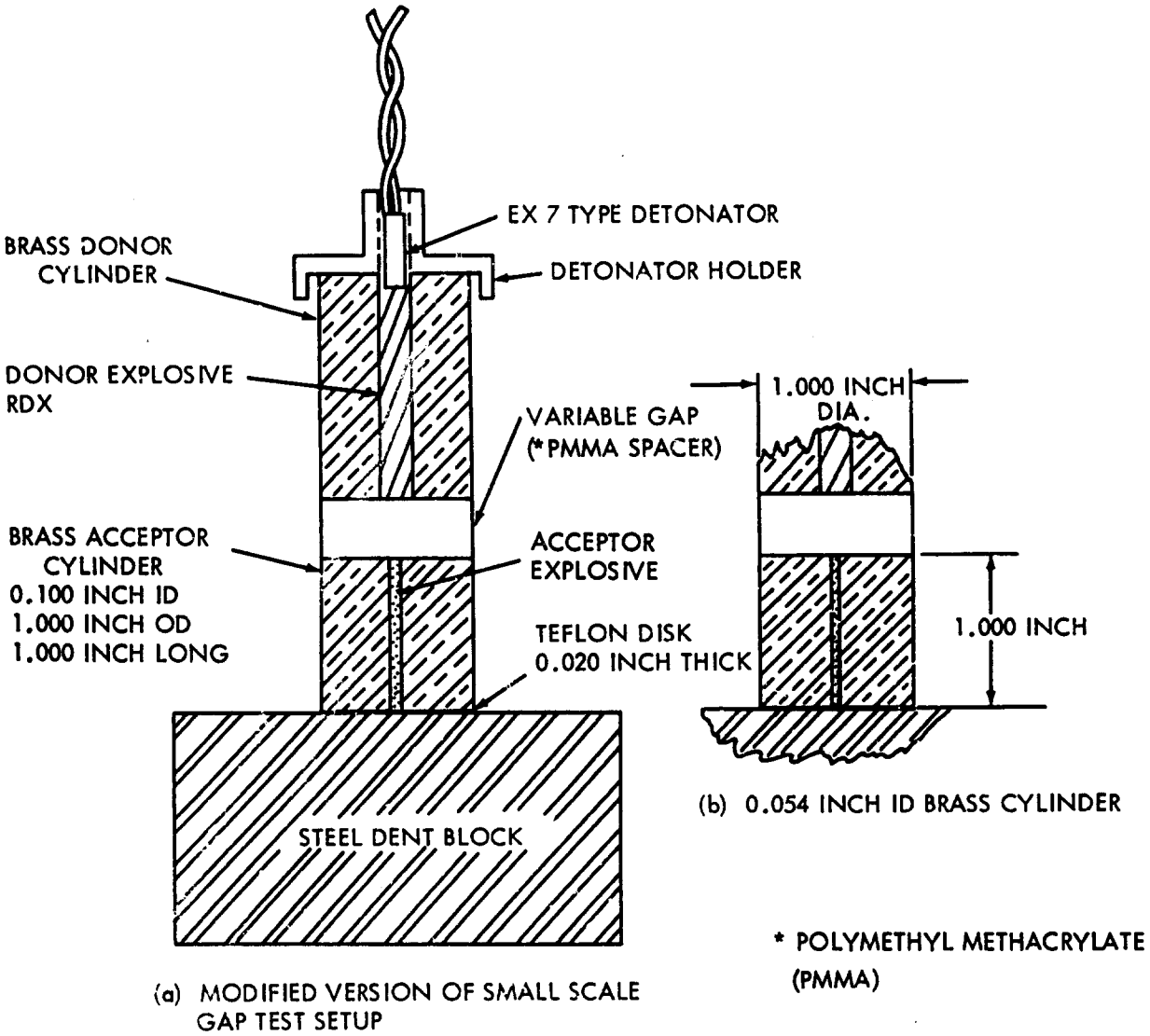

(a) MODIFIED VERSION OF SMALL SCALE GAP TEST SETUP

FIG. 1 SMALL SCALE GAP TEST SETUPS

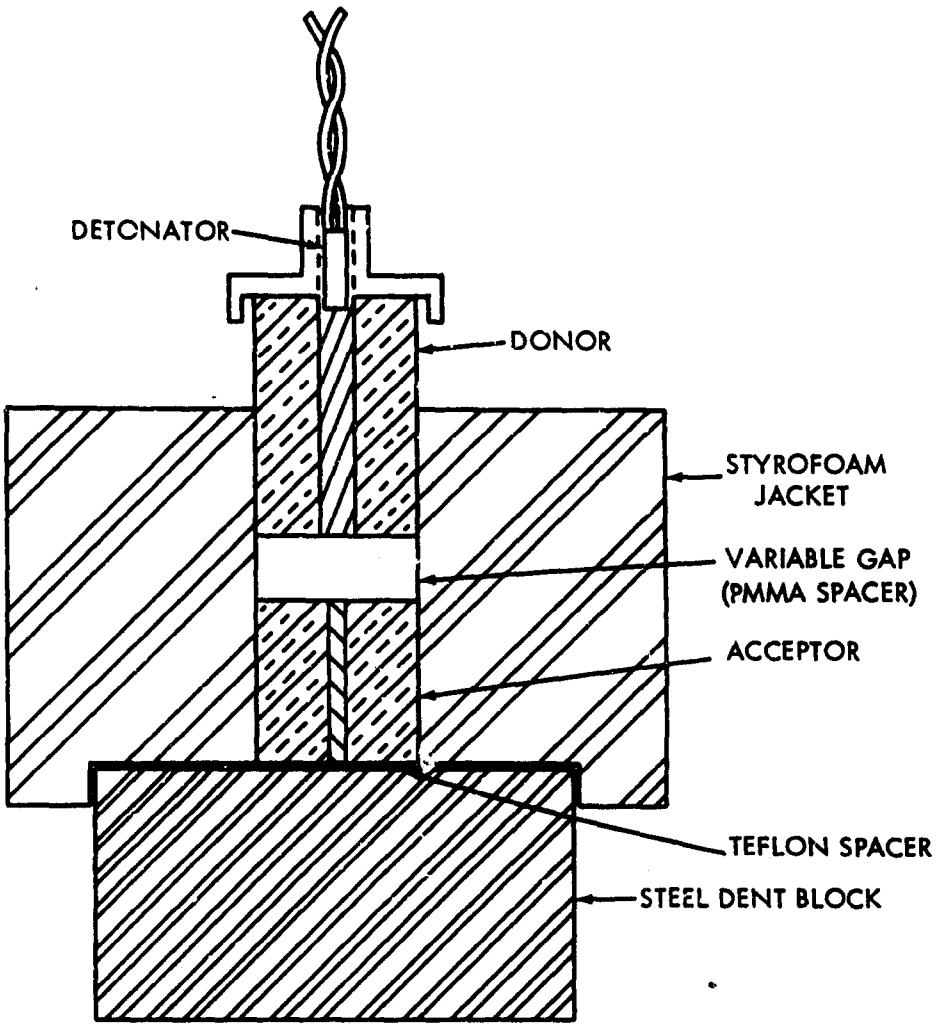

FIG. 2 SMALL SCALE GAP TEST SETUP FOR ACCEPTOR EXPOSED TO LOW TEMPERATURE

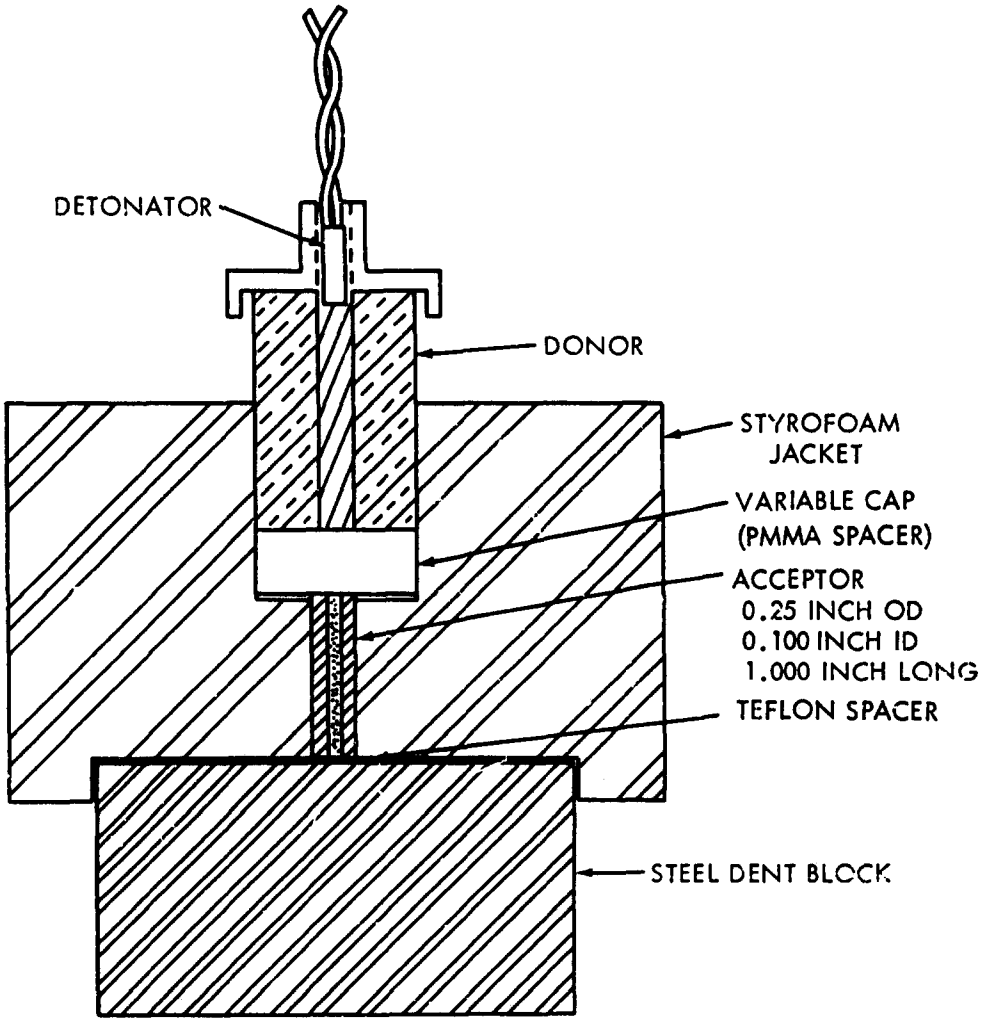

FIG. 3 SMALL SCALE GAP TEST SETUP FOR 0.25 INCH O.D. ACCEPTOR CYLINDER

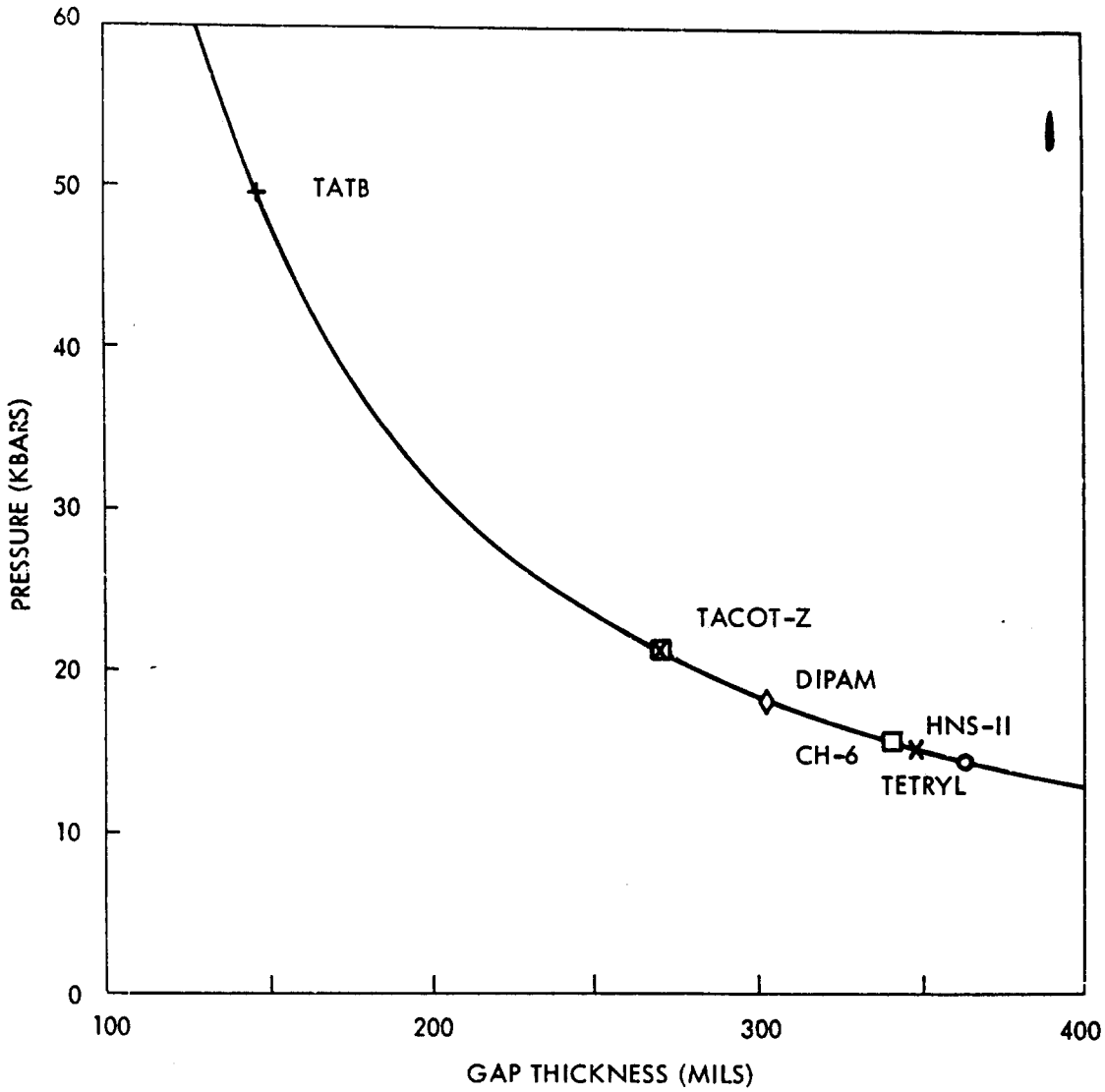

FIG. 4 FIFTY PERCENT SHOCK PRESSURE SENSITIVITY

UNCLASSIFIED
Security Classification

DOCUMENT CONTROL DATA - R & D

(Security classification of title, body of abstract and indexing annotation must be entered when the overall report is classified)

1. ORIGINATING ACTIVITY (Corporate author)

U.S. Naval Ordnance Laboratory
White Oak, Silver Spring, Maryland 20910

2a. REPORT SECURITY CLASSIFICATION

UNCLASSIFIED

2b. GROUP

3. REPORT TITLE

The Sensitivity of Selected Conventional and Heat Resistant Explosives at Low Temperatures

4. DESCRIPTIVE NOTES (Type of report and inclusive dates)

5. AUTHOR(S) (First name, middle initial, last name)

CALVIN L. SCOTT

6. REPORT DATE

12 May 1970

7a. TOTAL NO. OF PAGES

10

7b. NO. OF REFS

6

8a. CONTRACT OR GRANT NO.

b. PROJECT NO.

A35 532/UF17 353 502 Prob 203

c.

d.

9a. ORIGINATOR'S REPORT NUMBER(S)

NOLTR 70-36

9b. OTHER REPORT NO(S) (Any other numbers that may be assigned this report)

10. DISTRIBUTION STATEMENT

This document has been approved for public release and sale, its distribution is unlimited.

11. SUPPLEMENTARY NOTES

12. SPONSORING MILITARY ACTIVITY

Naval Air Systems Command

13. ABSTRACT

The effects of temperature, confinement, and column diameter on the shock sensitivity of some heat resistant and conventional booster-type explosives were studied in a gap test arrangement. As expected, sensitivity decreased with decreasing temperature. Also, as expected, the changes in sensitivity with temperature were small compared to the sensitivity effects of confinement and charge diameter.

DD FORM 1 NOV 65 1473 (PAGE 1)

S/N 0101-807-6801

UNCLASSIFIED
Security Classification

14 KEY WORDS	LINK A ROLE	LINK A WT	LINK B ROLE	LINK B WT	LINK C ROLE	LINK C WT
Shock Sensitivity						
Small Scale Gap Test						
Low Temperature						
Confinement						
Column Diameter						
Charge Diameter						
Tetryl						
CH-6						
DIPAM						
HNS-II						
TACOT-Z						
TATB						