AD 710587

MEMORANDUM
RM-5677-1-PR
MAY 1970

A SIMPLIFIED WEAPONS EVALUATION MODEL

Roger Snow and Margaret Ryan

D D C
RECEIVED
AUG 24 1970
A

PREPARED FOR:

UNITED STATES AIR FORCE PROJECT RAND

The RAND Corporation
SANTA MONICA • CALIFORNIA

THIS DOCUMENT HAS BEEN APPROVED FOR PUBLIC RELEASE AND SALE; ITS DISTRIBUTION IS UNLIMITED.

155

MEMORANDUM

RM-5677-1-PR

MAY 1970

A SIMPLIFIED WEAPONS EVALUATION MODEL

Roger Snow and Margaret Ryan

This research is supported by the United States Air Force under Project RAND—Contract No. F44620-67-C-0015—monitored by the Directorate of Operational Requirements and Development Plans, Deputy Chief of Staff, Research and Development, Hq USAF. Views or conclusions contained in this study should not be interpreted as representing the official opinion or policy of Rand or of the United States Air Force.

The RAND Corporation

PREFACE

This Memorandum, part of Rand's research on the use of airpower in support of ground operations, is one of a series of studies concerned with the prediction of damage to a single or multiple targets. Aspects of the target-weapon relationship, target-weapon errors, and the coverage problem were considered in RM-4566-PR, *FAST-VAL: A Theoretical Approach to Some General Target Coverage Problems*, March 1966 (For Official Use Only); the computer program, originally designed to compute inputs to the Rand FAST-VAL (Forward Air Strike Evaluation) simulation model, was described in a companion study, RM-4567-PR, *FAST-VAL: Target Coverage Model*, March 1966 (For Official Use Only).

From the point of view of production computations, however, the target coverage program had two serious limitations: the length of computer time required to make the computations, and dependence of precision on the size of the integration cell, which in turn depends on the machine capacity available. To alleviate these problems, a model was designed that replaced the empirical damage function used in the general model with a simpler and far less time-consuming analytic expression. The results of this work were described in an interim reference report, RM-5152-PR, *A Simplified Target Coverage Model*, November 1967 (For Official Use Only). As these results have been incorporated in the present study, RM-5152-PR has been withdrawn and replaced by this Memorandum.

The work of simplification continues with the present study, which describes a model that is sufficiently broad to cover almost all problems that arise in the field of nonnuclear weapons evaluation and a machine program that is designed to make coverage computations for some of the problems considered in RM-4567-PR in a fraction of the time previously needed. Without materially reducing the accuracy of the answers, the computer time required for some problems has been reduced by as much as a factor of 100.

After continued use of the model at Rand and at the Air Force Armament Laboratory, further refinements to the program to make it more efficient both as to

time and accuracy were deemed desirable. An improved method for determining the integration step size was implemented with a considerable increase in performance. The method of fitting an empirical bomblet distribution to an analytical distribution used in the program has been changed so that any smoothing necessary in irregular data is done by the machine rather than by the user, thus avoiding possible input errors. The process of using a multiple wing station configuration was also simplified. A direct input is now provided for the numbers of wing stations and the numbers of weapons per impulse per station.

SUMMARY

Two restrictions permit a simplification of the target coverage model and computer program described in *FAST-VAL: A Theoretical Approach to Some General Target Coverage Problems* [1] and in *FAST-VAL: Target Coverage Model* [2]. The problems are restricted to the case of a gaussian aiming error distribution and a rectangular target area (uniform distribution of the target elements in the area). As a result it is possible to reduce the coverage computations to two stages, each involving a double integration, in contrast to the three stages required in the original model. The second restriction concerns both the assumed form of the damage function and the ballistic error distribution. It is necessary that (1) the damage function be an analytic function, rather than an empirical function; (2) the ballistic error distribution be one of three types: gaussian, uniform, or stick* type; and (3) the damage function be integrable in a closed form with respect to the ballistic error distribution. Under these restrictions, the coverage computations are reduced to a single stage, involving only one double integration. For some cases, it is possible to reduce the problem to a summation of functions in closed form with no integration necessary.

Two types of damage functions are considered, corresponding to two different types of weapon-target effects: a fragment-sensitive target, or one in which the major damage mechanism is due to fragments rather than to a direct impact by the weapon; and an impact-sensitive target, or one for which there is a definite geometric figure that must be impacted by the weapon. For the fragment-sensitive target, the empirical function that is usually obtained from a computer program using fragmentation data is replaced by an analytic function, the "gaussian damage function," fitted through the choice of three parameters. For an impact-sensitive target, it is assumed that the target element is a rectangle, and that there is a fixed probability of damage, given a hit on the element. Under these assumptions, the damage function is exact.

---

*Stick distribution is defined in App. B.

The two types of damage function, the aiming and ballistic error distributions, and the basic coverage relation are considered in turn, and the expected coverage $K(X,Y)$ is expressed as one double integration in terms of the damage function and the various forms of the aiming and ballistic error distribution. For various coverage problems that occur in practice, an explicit expression for the coverage is derived in terms of the pertinent parameters. The set of formulas developed for the coverage function provides an answer to the weapon-target effectiveness problem that corresponds to most of the current weapon delivery systems.

The FORTRAN program computes numerical answers for each of the target coverage problems. The output of the program is the particular value of K depending on the parameters considered, such as aiming errors ballistic errors, spacing, and weapon-target effectiveness indices.

CONTENTS

PREFACE iii

SUMMARY v

Section
1. INTRODUCTION 1

2. BASIC FUNCTIONS 5
2.1 Damage Functions 5
2.2 Delivery Errors 7
2.3 The Basic Coverage Relations 10

3. RIPPLE DELIVERY WITH GAUSSIAN DELIVERY ERRORS 13
3.1 Rectangular Target Area: Fragment-sensitive Target 13
3.2 Rectangular Target Area: Impact-sensitive Target 17
3.3 Elliptical Target Area: Fragment-sensitive Target 19

4. DISPENSER-TYPE DELIVERIES AGAINST RECTANGULAR TARGET AREAS 23
4.1 Ripple-type Dispenser Deliveries 23
4.2 Uniform Distribution over a Rectangle 30
4.3 Uniform Distribution over an Ellipse 37
4.4 Uniform Distribution over an Elliptic Annulus 44

5. THE COMPUTER PROGRAM 51
5.1 General Considerations 51
5.2 Ripple of Bombs 57
5.3 Ripple of Fixed Dispensers 59
5.4 Ripple of Patterns 61
5.5 Summary 64
5.6 *QDHP* Program Inputs 66
5.7 Computer Program for Simplified Weapons Evaluation Model 70
5.8 Test Cases for a Ripple of Bombs and for a Ripple of Fixed Dispensers 102
5.9 Test Cases for a Ripple of Dispensers, Rectangular Bomblet Pattern 112
5.10 Test Cases for a Ripple of Dispensers, Elliptic Bomblet Pattern 117
5.11 Test Cases for a Ripple of Dispensers, Elliptic Annulus Bomblet Pattern 121
5.12 Test Cases for a Ripple of Dispensers, Circular Annulus Bomblet Pattern 125

Appendix
A. TRAIN DISTRIBUTION 129
B. STICK DISTRIBUTION 134
C. THE ELLIPTIC COVERAGE FUNCTION 137
D. USEFUL EXPRESSIONS 142

REFERENCES 147

1. INTRODUCTION

A number of general target coverage problems were considered in *FAST-VAL: A Theoretical Approach* [1]. The companion report, *FAST-VAL: Target Coverage Model* [2] presents a machine program designed to make coverage computations for some of the problems formulated in Ref. 1. However, from the point of view of production computations, the target coverage program described in Ref. 1 and Ref. 2 suffers from two serious drawbacks: lengthy computation time and dependence of precision on integration step cell size. In some cases a single problem may require 20 minutes of computer time, and the cell size used is usually limited by the memory capacity of the machine as well as the time element in computation. To alleviate these problems, a model was designed that replaced the empirical damage function used in the general model with a simpler and far less time-consuming analytic expression. The results of this work are described in Ref. 3, *A Simplified Target Coverage Model*, and have been incorporated in the present study.*

Continuing the work of simplification, the present study describes a machine program designed to make coverage computations for some of the problems considered in Ref. 2 in a fraction of the time previously needed. The program in Ref. 2 accomplishes the coverage computations in three stages, each involving a double integration. In contrast, this study restricts the problems to the case of a gaussian aiming error distribution and a rectangular target area (uniform distribution of the target elements in the area). As a result, it is possible to reduce the coverage computations to two stages, each involving a double integration. For most problems, these restrictions are acceptable, and assumptions of a gaussian aiming error distribution and of a rectangular target area are usually valid. The second simplification in this study concerns both the assumed form of the damage function and the ballistic error distribution. It is necessary that (1) the damage function be an analytic function, rather than an empirical function; (2) the ballistic error

---

*Reference 3 will be withdrawn and replaced by this Memorandum.

distribution be one three types: gaussian, uniform, or stick type; and (3) the damage function be integrable in closed form with respect to the ballistic error distribution. Under these restrictions, the coverage computations are reduced to a single stage, involving only one double integration. For some cases it is possible to reduce the problem to a summation of functions in closed form with no integration necessary.

Two types of damage functions are considered, corresponding to two different types of weapon-target effects: a fragment-sensitive target and an impact-sensitive target. For the fragment-sensitive target, the damage function used in the program in Ref. 2 is an empirical function that is usually obtained from a computer program using the fragmentation data (size, velocity, and distribution of fragments) from arena tests. The simplification used here is to replace this matrix function with an analytic function, the "gaussian damage function" [1], fitted through the choice of three parameters. The form of this function fits most of the empirical nonnuclear weapon-effects tables very well. The use of this function is not new. It has been used in work at Sandia Corporation, where it is called the "casualty function." A Ballistic Research Laboratories report [4] considered the function for the special case of an elliptical target. Current work both at the Strategic Air Command and the Naval Weapons Laboratory has involved use of this function. It also occurs naturally as an approximation to the circular coverage function, where it has been referred to as the "Carleton" approximation. In other uses, it has been called the "Carleton" function.

For an impact-sensitive target, i.e., one for which there is a definite geometric figure that must be impacted by the weapon, it is assumed that the target element is a rectangle, and that there is a fixed probability of damage, given a hit on the element. Under these assumptions, the damage function is exact, i.e., the same as would be used in the program of Ref. 2.

Section 2, "Basic Functions," considers in turn the two types of damage functions, the aiming and ballistic error distributions to be used and the basic coverage relation, which expresses the expected coverage $K(X,Y)$ as one double integration

in terms of the damage function and the various forms of the aiming and ballistic error distributions.

Sections 3 and 4 consider various coverage problems that occur in practice. For each of these, there is derived an explicit expression for the coverage $K(X,Y)$ in terms of the pertinent parameters. Section 3 examines the ripple delivery of weapons with gaussian distribution of both the ballistic and aiming errors (air delivered bombs). Included is one case of an elliptical target area for a fragment-sensitive target, since the methods used here are applicable to this case. Various types of dispenser delivery of weapons are considered in Sec. 4. Section 4.1 discusses deliveries for fixed dispensers such as the SUU-7 and SUU-14 (CBU-1, 2, 3, 7, etc.). For these cases, the ballistic distribution in range is usually available as a table obtained from test data and is fed into the model of Ref. 2 in this form. For use in the model in this Memorandum, this empirical distribution is fitted by a stick distribution through the use of two parameters. Section 4.2 considers the case of a ripple of dispensers, released from the carrier, each of which spreads its subweapons uniformly over a rectangular pattern (Hayes dispenser). A ripple of dispensers, released from the carrier, each of which spreads its subweapons uniformly over an ellipse (Rock-eye), is described in Sec. 4.3. Section 4.4 examines the same case for dispensers that spread their subweapons uniformly over an elliptical annulus (self-dispersing subweapons, such as the CBU-24).

Sections 3 and 4 thus derive a set of formulas for the coverage function $K(X,Y)$ that provide the answer to the weapon-target effectiveness problem corresponding to most of the current weapon delivery systems. Section 5 describes a machine program that computes numerical answers for each of these problems. The output of the machine program is the particular value of K depending on the parameters considered (aiming errors, ballistic errors, spacing, weapon-target effectiveness indices, etc.) and is designated by $X(j)$, where j is an index that designates the particular type of problem: X(1), X(11), X(5), and X(15) are answers to the problems considered in Sec. 3, air-delivered bombs; $X(2)$, $X(12)$, $X(3)$,

$X(13)$, $X(4)$, and $X(14)$ are answers to the problems in Sec. 4.1, deliveries from fixed dispensers; $X(103)$, $X(104)$, $X(105)$, and $X(106)$ are answers to problems in Sec. 4.2, dispensers with a uniform pattern over a rectangle; $X(107)$, $X(108)$, and $X(109)$ are answers to problems in Sec. 4.3, dispensers with a uniform pattern over an ellipse; $X(100)$, $X(101)$, $X(102)$, $X(110)$, $X(111)$, and $X(112)$ are answers to problems considered in Sec. 4.4, dispensers with a uniform pattern over an annulus. Each pertinent formula in Secs. 3 and 4 is designated by the proper X designation to correlate it with the corresponding computer output.

Section 5, a description of the machine program, was planned for the person interested only in running the program and can be used without necessarily referring to the previous sections. Thus, some description of the various problems considered in Secs. 3 and 4 is repeated.

2. BASIC FUNCTIONS

2.1. DAMAGE FUNCTIONS

We will be concerned with two types of damage functions, depending on the weapon-target damage mechanism: (1) a fragment-sensitive target and (2) an impact-sensitive target with a defined area in which a hit is necessary for damage, i.e., the probability of damage if hit, p_{dk}, may be less than 1.

2.1.1. Fragment-sensitive Gaussian Damage Function

As the name implies, a fragment-sensitive weapon-target case is one in which the major damage mechanism is due to fragments rather than to a direct impact by the weapon. In general, the damage function will be computed in matrix form. We will assume the form of the damage function to be

$$D(x,y)=D_0 \exp\left(-D_0\left[\frac{x^2}{R^2(1)}+\frac{y^2}{R^2(2)}\right]\right), \tag{2.1}$$

where $D(x,y)$ is the probability that a target element at (x,y) is "killed" (damaged at least to a specified degree), and $R(1)$, $R(2)$, and D_0 are parameters to be obtained from empirical data.

In Ref. 1, Sec. 1.6.3, certain parameters are discussed that may be used to characterize a damage function. The weapon radius R is defined as

$$R^2=\int_{-\infty}^{\infty}\int_{-\infty}^{\infty}\frac{D(x,y)\,dx\,dy}{\pi}.$$

Using (2.1), we find that

$$R^2=R(1)R(2). \tag{2.2}$$

Along any ray θ, the mean square radial damage distance $\overline{r^2}(\theta)$ is, if (2.1) is used,

$$\overline{r^2}(\theta)=2\int_0^{\infty} rD(r\cos\theta, r\sin\theta)\,dr \tag{2.3}$$

$$=\frac{1}{\chi^2(\theta)},$$

where

$$X^2(\theta)=\frac{\cos^2\theta}{R^2(1)}+\frac{\sin^2\theta}{R^2(2)}.$$

Letting $\theta=0^\circ$ and $\theta=90^\circ$, we find that

$$R^2(1)=\int_0^\infty 2xD(x,0)dx=\overline{r^2}(0^\circ),$$

(2.4)

$$R^2(2)=\int_0^\infty 2yD(0,y)dy=\overline{r^2}(90^\circ).$$

Thus, $R(1)$ and $R(2)$ in (2.1) are simply the mean square radial damage distances along the x and y axes, respectively.

Considering the mean radial damage distance $\overline{r}(\theta)$ and using (2.1), we obtain

(2.5)
$$\overline{r}(\theta)=\int_0^\infty D(r\cos\theta,r\sin\theta)dr$$

$$=\frac{\sqrt{\pi D_0}}{2X(\theta)}.$$

The relative damage variance $\Sigma^2(\theta)$ is

$$\Sigma^2(\theta)=1-\frac{[\overline{r}(\theta)]^2}{\overline{r^2}(\theta)}=1-D_0\frac{\pi}{4},$$

(2.6)

$$D_0=\frac{4[1-\Sigma^2(\theta)]}{\pi}.$$

Thus, we can view the three parameters in (2.1) as the triplet $[R(1),R(2),\Sigma]$, where $R(1)$ and $R(2)$ are the mean square radial distances along the x and y axes, and Σ^2 is the relative damage variance. Instead of $R(1)$ and $R(2)$, we can use R and ρ, considering the triplet (R,ρ,Σ), where

$$R^2 = R(1)R(2),$$

(2.7)

$$\rho = \frac{R(1)}{R(2)}.$$

The parameter R is the weapon radius as in (2.2). The function D is an elliptic damage function in that constant probability contours are all ellipses with the same eccentricity, $\sqrt{1-R^2(1)/R^2(2)}$. The parameter ρ thus characterizes the eccentricity of the ellipses, i.e., the eccentricity is equal to $\sqrt{1-\rho^2}$. The parameter Σ characterizes the spread or dispersion of the damage function.

2.1.2. Impact-sensitive Damage Function

We define an impact-sensitive target to be one for which there is a definite geometric figure that must be impacted by the weapon or subweapon; i.e., there is a p_{dk}, the probability of damage if hit, that may be less than 1. In general, we will use a rectangle of half dimensions $B(1)$ and $B(2)$. The damage function D is thus

(2.8) $$D(x,y) = p_{dk}\alpha(x,B(1))\alpha(y,B(2)),$$

where $\alpha(x,B)$ is the cookie-cutter function

(2.9) $$\alpha(x,B) = 1 \quad \text{if} \quad -B \le x \le B$$
$$= 0 \quad \text{otherwise.}$$

We will consider x to be the range direction and y to be the deflection direction. In this study, odd subscripts will refer to dimensions in the x direction and even subscripts to dimensions in the y direction.

2.2. DELIVERY ERRORS

In general, we shall consider the case of multiple delivery of weapons. Each weapon is assumed to be subject to a ballistic error in range and deflection, expressed by a distribution function $T(x,y)$, independent of the other weapons. The whole delivery is considered to be subject to aiming errors in range and deflection, expressed by another distribution function.

2.2.1. Aiming Error Distributions

We shall confine our attention to the case of the aiming error distribution having the form of a noncorrelated bivariate gaussian, i.e.,

$$\text{(2.10)} \qquad \text{Prob}(x \le X, y \le Y) = \int_{-\infty}^{X}\int_{-\infty}^{Y} \exp\left(-\frac{1}{2}\left[\frac{x^2}{t^2(1)} + \frac{y^2}{t^2(2)}\right]\right)\frac{dx\,dy}{2\pi t(1)t(2)},$$

where $t(1)$ and $t(2)$ are the standard deviations in the x and y directions, respectively. For convenience, we define the linear gaussian distribution $G(X)$ and its density function $g(X)=G'(X)$ as follows:

$$\text{(2.11)} \qquad \begin{aligned} G(X) &= \int_{-\infty}^{X} g(x)\,dx = \int_{-\infty}^{X} \exp\left(-\frac{x^2}{2}\right)\frac{dx}{\sqrt{2\pi}}, \\ g(x) &= \frac{\exp(-x^2/2)}{\sqrt{2\pi}}. \end{aligned}$$

Thus, Eq. (2.10) can be written as

$$\text{(2.12)} \qquad \text{Prob}(x \le X, y \le Y) = G\left(\frac{X}{t(1)}\right)G\left(\frac{Y}{t(2)}\right).$$

If we wish to use REP (range probable error) and DEP (deflection probable error), the relations between them and the standard deviations are

$$\text{(2.13)} \qquad \begin{aligned} \text{REP} &= .6744t(1), \\ \text{DEP} &= .6744t(2). \end{aligned}$$

Further, if $t(1)=t(2)=t$, CEP (circular probable error) is given by

$$\text{(2.14)} \qquad \text{CEP} = 1.1774t = 1.7459\text{REP}.$$

2.2.2. Ballistic Error Distributions

We shall assume that the ballistic errors are independent in the x and y directions. Therefore, the ballistic error distribution $T(X,Y)$ is of the form $T(X,Y)=T_1(X)T_2(Y)$. We shall consider three types of linear ballistic error distributions: gaussian, uniform, and stick.

a. Gaussian Ballistic Error. As for the aiming error, we assume for the first ballistic error a linear gaussian error distribution, i.e.,

$$T_1(X)=G\left(\frac{X}{s(1)}\right)=\int_{-\infty}^{X}\exp\left(-\frac{1}{2}\frac{x^2}{s^2(1)}\right)\frac{dx}{\sqrt{2\pi}s(1)},$$

(2.15)

$$T_2(Y)=G\left(\frac{Y}{s(2)}\right).$$

If the errors are gaussian in both directions, we have

(2.16) $$T(X,Y)=G\left(\frac{X}{s(1)}\right)G\left(\frac{Y}{s(2)}\right).$$

b. Uniform Ballistic Error. For the second ballistic error, we assume a uniform distribution, i.e.,

(2.17) $$T_1(X)=\int_{-L}^{X}\alpha(x,L)\frac{dx}{2L},$$

where $\alpha(x,L)$ is defined in (2.9). A similar expression holds in the y direction.

c. Stick Ballistic Error. A third type of ballistic error is the so-called stick type, which is a combination of a uniform and a gaussian distribution, discussed in App. B. As given in (B4), we have

(2.18) $$T_1(X)=H\left(\frac{X}{s},\frac{L}{s}\right)=\int_{-\infty}^{X}h\left(\frac{y}{s},\frac{L}{s}\right)\frac{dy}{s},$$

where

$$H(X,L)=\int_{-\infty}^{X}h(x,L)dx,$$

(2.19)

$$h(x,L)=\frac{1}{2L}\int_{-L}^{L}g(x+y)dy.$$

If Lemma 3 in App. D is used, the function $H(X,L)$ can be evaluated, for $L\neq 0$, as

(2.20) $$H(X,L)=(X+L)G(X+L)-(X-L)G(X-L)+g(X+L)-g(X-L),$$

where $G(X)$ and $g(x)$ are defined in (2.11).

We note the following limits for h and H:

$$\lim_{L\to 0}\frac{h(x/s,L/s)}{s}=\frac{g(x/s)}{s},$$

$$\lim_{s\to 0}\frac{h(x/s,L/s)}{s}=\frac{\alpha(x,L)}{2L},$$

(2.21)

$$\lim_{L\to 0}H\left(\frac{X}{s},\frac{L}{s}\right)=G\left(\frac{X}{s}\right),$$

$$\lim_{s\to 0}H\left(\frac{X}{s},\frac{L}{s}\right)=\int_{-L}^{X}\frac{\alpha(x,L)}{2L}dx.$$

2.3. THE BASIC COVERAGE RELATIONS

Define $K(X,Y)$ as the fractional coverage to a target area with center at (X,Y) inflicted by a pattern of weapons subject to a gaussian aiming error with standard deviations $t(1)$ and $t(2)$. The pattern damage function $D_p(u,v)$ is the kill probability to a target element at (u,v) if the center of the pattern is at (0,0). The function $D_p(u,v)$ depends on the specific problem and will be determined for each case.

Define $K_p(u,v)$ as the point target kill probability to a target element at (u,v) if the aiming point is at (0,0). We obtain

$$K_p(u,v)=\int_{-\infty}^{\infty}\int_{-\infty}^{\infty}D_p(u-x,v-y)g\left(\frac{x}{t(1)}\right)g\left(\frac{y}{t(2)}\right)\frac{dxdy}{t(1)t(2)}. \tag{2.22}$$

The fractional coverage $K(X,Y)$ for a target area A is thus

$$K(X,Y)=\iint_A K_p(u,v)\frac{dudv}{A} \tag{2.23}$$

$$=\iiiint_{-\infty}^{\infty}\int_{-\infty}^{\infty}D_p(u-x,v-y)g\left(\frac{x}{t(1)}\right)g\left(\frac{y}{t(2)}\right)\frac{dxdydudv}{t(1)t(2)A}.$$

Consider a rectangular area of dimensions $[2A(1),2A(2)]$. Using (2.23), we obtain

$$(2.24)\quad K(X,Y)=\int_{X-A(1)}^{X+A(1)}\int_{Y-A(2)}^{Y+A(2)}\int_{-\infty}\int_{-\infty}D_p(u-x,v-y)g\left(\frac{x}{t(1)}\right)g\left(\frac{y}{t(2)}\right)\frac{dxdydudv}{4t(1)t(2)A(1)A(2)}.$$

Through appropriate changes in variable and reversing the order of integration, we obtain

$$(2.25)\quad K(X,Y)=\int_{-\infty}^{\infty}\int_{-\infty}^{\infty}D_p(x+X,y+Y)\left[\frac{1}{2A(1)}\int_{[x-A(1)]/t(1)}^{[x+A(1)]/t(1)}g(u)du\right]$$

$$\left[\frac{1}{2A(2)}\int_{[y-A(2)]/t(2)}^{[y+A(2)]/t(2)}g(v)dv\right]dxdy.$$

Using the definition of $h(x,L)$ from (2.19) in (2.25), we get

$$(2.26)\qquad K(X,Y)=\int_{-\infty}^{\infty}\int_{-\infty}^{\infty}D_p(x+X,y+Y)h\left(\frac{x}{t(1)},\frac{A(1)}{t(1)}\right)h\left(\frac{y}{t(2)},\frac{A(2)}{t(2)}\right)\frac{dxdy}{t(1)t(2)}.$$

If $D_p(x,y)$ can be expressed without integrals, we have thus reduced the problem of obtaining K to a double integration. An alternate form for K used in the numerical procedure is

$$(2.27)\qquad K(X,Y)=\int_{-\infty}^{\infty}\int_{-\infty}^{\infty}D_p[xt(1)+X,yt(2)+Y]h\left(x,\frac{A(1)}{t(1)}\right)h\left(y,\frac{A(2)}{t(2)}\right)dxdy.$$

For a gaussian target, i.e., one whose location (u,v) is subject to a gaussian distribution with variances $t^2(3)$ and $t^2(4)$ and center at (X,Y), the probability of kill $K(X,Y)$ is

$$(2.28)\qquad K(X,Y)=\int_{-\infty}^{\infty}\int_{-\infty}^{\infty}K_p(u,v)g\left(\frac{u-X}{t(3)}\right)g\left(\frac{v-Y}{t(4)}\right)\frac{dudv}{t(3)t(4)},$$

where $K_p(u,v)$ is given in (2.22). Substituting Eq. (2.22) in (2.28) and using Lemma 1 in App. D, we obtain

$$K(X,Y)=\int_{-\infty}^{\infty}\int_{-\infty}^{\infty} D_p(x+X,y+Y)\,g\left(\frac{x}{t(5)}\right)g\left(\frac{y}{t(6)}\right)\frac{dxdy}{t(5)t(6)}, \tag{2.29}$$

where

$$\begin{aligned} t^2(5)&=t^2(1)+t^2(3),\\ t^2(6)&=t^2(2)+t^2(4). \end{aligned} \tag{2.30}$$

Now from (2.21), we get

$$\begin{aligned} \frac{h(x/t(5),0)}{t(5)}&=\frac{g(x/t(5))}{t(5)},\\ \frac{h(y/t(6),0)}{t(6)}&=\frac{g(y/t(6))}{t(6)}. \end{aligned} \tag{2.31}$$

Thus we can put K in (2.29) in the form

$$K(X,Y)=\int_{-\infty}^{\infty}\int_{-\infty}^{\infty} D_p(x+X,y+Y)\,h\left(\frac{x}{t(5)},0\right)h\left(\frac{y}{t(6)},0\right)\frac{dxdy}{t(5)t(6)}. \tag{2.32}$$

When we compare this equation with Eq. (2.26), we see that the problem is equivalent to that of a point target with the aiming error variances equal to the sum of the actual aiming error variances and the target location variances.

3. RIPPLE DELIVERY WITH GAUSSIAN DELIVERY ERRORS

3.1. RECTANGULAR TARGET AREA: FRAGMENT-SENSITIVE TARGET

Let us consider first a single weapon against a target element at (u,v) subject to ballistic errors according to a gaussian distribution with standard deviations $s(1)$ and $s(2)$. If the ballistic center of impact is at (0,0), the kill probability $D_b(u,v)$ is given by

$$D_b(u,v)=\int_{-\infty}^{\infty}\int_{-\infty}^{\infty} D(u-x,v-y)\,g\left(\frac{x}{s(1)}\right)g\left(\frac{y}{s(2)}\right)\frac{dx\,dy}{s(1)s(2)}, \tag{3.1}$$

where $D(x,y)$ is the damage function in (2.1). Substituting for D from (2.1) and integrating, using Lemma 1 of App. D, we obtain

$$D_b(u,v)=\frac{R(1)R(2)}{2q(1)q(2)}\exp\left(-\frac{1}{2}\left\{\left[\frac{u}{q(1)}\right]^2+\left[\frac{v}{q(2)}\right]^2\right\}\right), \tag{3.2}$$

where

$$q^2(1)=\frac{R^2(1)}{2D_0}+s^2(1),$$

$$q^2(2)=\frac{R^2(2)}{2D_0}+s^2(2).$$

Consider the delivery of $N(1)$ weapons against a target element at (u,v). Each weapon is subject to ballistic errors as above. The $N(1)$ weapons will be delivered in a ripple mode. Examine first a zero aiming error. Then the ith weapon will have a center of impact (CI) at (ξ_i,η_i). The array of CI's form the ripple pattern. We will use the center of gravity of the pattern as the pattern reference point; i.e., if the reference point is at (x,y), then

$$x=\frac{1}{N(1)}\sum_{i=1}^{N(1)}\xi_i,\quad y=\frac{1}{N(1)}\sum_{i=1}^{N(1)}\eta_i. \tag{3.3}$$

We will measure a_i and b_i from the reference point, i.e.,

$$a_i=\xi_i-x,$$

$$b_i=\eta_i-y.$$

Thus, we obtain

$$\sum_{i=1}^{N(1)} a_i = \sum_{i=1}^{N(1)} b_i = 0. \tag{3.4}$$

Consider the pattern reference point at (x,y) and a single weapon subject only to ballistic error. The center of impact of the ith weapon is thus at $(x+a_i, y+b_i)$. Let p be the weapon reliability factor, i.e., the probability of the weapon working properly. If the center of the pattern is at (0,0), the kill probability $D_p(u,v)$ due to the pattern is given by

$$D_p(u,v) = 1 - \prod_{i=1}^{N(1)} [1 - pD_b(u-a_i, v-b_i)], \tag{3.5}$$

where D_b is given by (4.2). Explicitly, we have

$$D_p(u,v) = 1 - \prod_{i=1}^{N(1)} \left[1 - \frac{pR(1)R(2)}{2q(1)q(2)} \exp\left(-\frac{1}{2}\left\{\left[\frac{u-a_i}{q(1)}\right]^2 + \left[\frac{v-b_i}{q(2)}\right]^2\right\}\right)\right]. \tag{3.6}$$

Using this expression for D_p in (2.27), we obtain the coverage $K(X,Y)$:

$$K(X,Y) = \int_{-\infty}^{\infty}\int_{-\infty}^{\infty} \left\{1 - \prod_{i=1}^{N(1)} \left[1 - \frac{pR(1)R(2)}{2q(1)q(2)} \exp\left(-\frac{1}{2}\left\{\left[\frac{xt(1)+X-a_i}{q(1)}\right]^2 + \left[\frac{yt(2)+Y-b_i}{q(2)}\right]^2\right\}\right)\right]\right\} h\left(x, \frac{A(1)}{t(1)}\right) h\left(y, \frac{A(2)}{t(2)}\right) dx\,dy. \tag{3.7}$$

Equation (3.7) is the basis for obtaining $X(11)$ in the machine computation program discussed in Sec. 5.

Expanding the product in (3.6), we obtain D_p as a sum, which, when substituted in (2.24), gives an alternate expression for $K(X,Y)$ that can be integrated term by term. Thus, after expansion, we have

$$(3.8)\qquad K(X,Y)=\sum_{k=1}^{N(1)}(-1)^{k-1}\left[\frac{pR(1)R(2)}{2q(1)q(2)}\right]^k\sum_{i_1=1}^{N(1)-k+1}\sum_{i_2=i_1+1}^{N(1)-k+2}\cdots\sum_{i_k=i_{k-1}+1}^{N(1)}$$

$$\times\int_{X-A(1)}^{X+A(1)}\int_{-\infty}^{\infty}\exp\left(-\sum_{j=1}^{k}\frac{(u-a_{i_j}-x)^2}{2q^2(1)}\right)g\left(\frac{x}{t(1)}\right)\frac{dx\,du}{2t(1)A(1)}\int_{Y-B(1)}^{Y+B(1)}\int_{-\infty}^{\infty}$$

$$\times\exp\left(-\sum_{j=1}^{k}\frac{(v-b_{i_j}-y)^2}{2q^2(2)}\right)g\left(\frac{y}{t(2)}\right)\frac{dy\,dv}{2t(2)A(2)}.$$

Using Lemma 5 in App. D to evaluate the inner integrals in (3.8), we obtain

$$(3.9)\qquad K(X,Y)=\sum_{k=1}^{N(1)}(-1)^{k-1}\left[\frac{pR(1)R(2)}{2q(1)q(2)}\right]^k\left[\frac{q(1)q(2)}{kQ(1)Q(2)}\right]$$

$$\times\sum^{\binom{N(1)}{k}}\int_{X-A(1)}^{X+A(1)}\exp\left(-\frac{[u-\bar{a}(i_1,i_2,\ldots,i_k)]^2}{2Q^2(1)}\right)\frac{du}{2A(1)}$$

$$\times\int_{Y-A(2)}^{Y+A(2)}\exp\left(-\frac{[v-\bar{b}(i_1,i_2,\ldots,i_k)]^2}{2Q^2(2)}\right)\frac{du}{2A(1)}$$

$$\times\exp\left(-\frac{k[\overline{a^2}(i_1,i_2,\ldots,i_k)-\bar{a}^2(i_1,i_2,\ldots,i_k)]}{2q^2(1)}\right)$$

$$\times\exp\left(-\frac{k[\overline{b^2}(i_1,i_2,\ldots,i_k)-\bar{b}^2(i_1,i_2,\ldots,i_k)]}{2q^2(2)}\right),$$

where

$$\overline{a^2}(i_1,i_2,\ldots,i_k)=\frac{1}{k}\sum_{j=1}^{k}a_{i_j}^2,\qquad \bar{a}(i_1,i_2,\ldots,i_k)=\frac{1}{k}\sum_{j=1}^{k}a_{i_j},$$

$$\overline{b^2}(i_1,i_2,\ldots,i_k)=\frac{1}{k}\sum_{j=1}^{k}b_{i_j}^2,\qquad \bar{b}(i_1,i_2,\ldots,i_k)=\frac{1}{k}\sum_{j=1}^{k}b_{i_j},$$

(3.10)
$$q^2(1)=\frac{R^2(1)}{2D_0}+s^2(1),$$

$$q^2(2)=\frac{R^2(2)}{2D_0}+s^2(2),$$

$$Q^2(1)=t^2(1)+\frac{q^2(1)}{k}=t^2(1)+\frac{R^2(1)/2D_0+s^2(1)}{k},$$

$$Q^2(2)=t^2(2)+\frac{q^2(2)}{k}=t^2(2)+\frac{R^2(2)/2D_0+s^2(2)}{k},$$

$$\binom{N(1)}{k}=\frac{N(1)!}{k![N(1)-k]!},$$

$$\sum^{\binom{N(1)}{k}}=\sum_{i_1=1}^{N(1)-k+1}\ \sum_{i_2=i_1+1}^{N(1)-k+2}\cdots\sum_{i_k=i_{k-1}+1}^{N(1)}.$$

The sum $\sum^{\binom{N(1)}{k}}$ is the sum over the $\binom{N(1)}{k}$ combinations of the $N(1)$ integers $1,2,3,\ldots,N(1)$ taken k at a time.

If we have a point target, i.e., $A(1)=A(2)=0$, Eq. (3.9) for K becomes

$$(3.11)\quad K(X,Y)=\sum_{k=1}^{N(1)}(-1)^{k-1}\left[\frac{pR(1)R(2)}{2q(1)q(2)}\right]^k\left[\frac{q(1)q(2)}{kQ(1)Q(2)}\right]$$
$$\times\sum^{\binom{N(1)}{k}}\exp\left(-\frac{(X-\bar{a})^2}{2Q^2(1)}\right)\exp\left(-\frac{(Y-\bar{b})^2}{2Q^2(2)}\right)\exp\left(-k\frac{(\overline{a^2}-\bar{a}^2)}{2q^2(1)}\right)\exp\left(-\frac{k(\overline{b^2}-\bar{b}^2)}{2q^2(2)}\right).$$

In the special case of $a_i=b_i=0$, i.e., salvo fire against a point target, the sum $\sum^{\binom{N(1)}{k}}$ in (3.11) is simply $\binom{N(1)}{k}$ since $\overline{a^2}=\bar{a}^2=\overline{b^2}=\bar{b}^2=0$. Thus, we obtain

$$(3.12)\quad K(X,Y)=\sum_{k=1}^{N(1)}(-1)^{k-1}\binom{N(1)}{k}\left[\frac{pR(1)R(2)}{2q(1)q(2)}\right]^k\left[\frac{q(1)q(2)}{kQ(1)Q(2)}\right]\exp\left(-\frac{X^2}{2Q^2(1)}\right)\exp\left(-\frac{Y^2}{2Q^2(2)}\right).$$

For an area target, if the definition of $h(x,L)$ given in (2.19) is used, Eq. (3.9) for K becomes

$$(3.13)\qquad K(X,Y)=\sum_{k=1}^{N(1)}(-1)^{k-1}\left[\frac{pR(1)R(2)}{2q(1)q(2)}\right]^k\frac{2\pi}{k}\left[\frac{q(1)q(2)}{Q(1)Q(2)}\right]$$

$$\times\sum_{k}^{\binom{N(1)}{k}}h\left(\frac{X-\bar{a}}{Q(1)},\frac{A(1)}{Q(1)}\right)h\left(\frac{Y-\bar{b}}{Q(2)},\frac{A(2)}{Q(2)}\right)$$

$$\times\exp\left(-\frac{k[\overline{a^2}(i_1,i_2,\ldots,i_k)-\bar{a}^2(i_1,i_2,\ldots,i_k)]}{2q^2(1)}\right)$$

$$\times\exp\left(-\frac{k[\overline{b^2}(i_1,i_2,\ldots,i_k)-\bar{b}^2(i_1,i_2,\ldots,i_k)]}{2q^2(2)}\right),$$

where the symbols are defined in (3.10).

In the special case of salvo fire, i.e., $a_i=b_i=0$, the expression for $K(X,Y)$ in (3.13) simplifies to

$$(3.14)\qquad K(X,Y)=\sum_{k=1}^{N(1)}(-1)^{k-1}\binom{N(1)}{k}\left[\frac{pR(1)R(2)}{2q(1)q(2)}\right]^k\frac{2\pi}{k}\left[\frac{q(1)q(2)}{Q(1)Q(2)}\right]h\left(\frac{X}{Q(1)},\frac{A(1)}{Q(1)}\right)h\left(\frac{Y}{Q(2)},\frac{A(2)}{Q(2)}\right).$$

Equations (3.13) and (3.14) form the basis for obtaining $X(1)$ in the machine program. Thus, $X(1)$ and $X(11)$ are equivalent expressions in which different computation techniques are used.

3.2. RECTANGULAR TARGET AREA: IMPACT-SENSITIVE TARGET

Consider a single weapon subject only to ballistic errors. Substituting the impact damage function D from (2.8) in the expression for D_b in (3.1), we obtain for $D_b(u,v)$ the equation

$$(3.15)\qquad D_b(u,v)=p_{dk}\int_{u-B(1)}^{u+B(1)}\int_{v-B(2)}^{v+B(2)}g\left(\frac{x}{s(1)}\right)g\left(\frac{y}{s(2)}\right)\frac{dxdy}{s(1)s(2)}.$$

If we define $f(x,y)$ as

$$f(x,y)=G(x+y)-G(x-y), \tag{3.16}$$

D_b from (3.15) becomes

$$D_b(u,v)=p_{dk}f\left(\frac{u}{s(1)},\frac{B(1)}{s(1)}\right)f\left(\frac{v}{s(2)},\frac{B(2)}{s(2)}\right). \tag{3.17}$$

Proceeding exactly as in the preceding section on a fragment-sensitive target for a ripple of $N(1)$ weapons, we obtain an expression for $D_p(u,v)$ corresponding to (3.5):

$$D_p(u,v)=1-\prod_{i=1}^{N(1)}[1-p'D_b(u-a_i,v-b_i)], \tag{3.18}$$

where D_b is given in (3.17) and

$$p'=pp_{dk}, \tag{3.19}$$

i.e., p' is the product of the reliability factor for the weapon and the probability of damage if hit. Using (3.17) in (3.18) and substituting in (2.27), we obtain for $K(X,Y)$

$$K(X,Y)=\int_{-\infty}^{\infty}\int_{-\infty}^{\infty}\left\{1-\prod_{i=1}^{N(1)}\left[1-p'f\left(\frac{xt(1)+X-a_i}{s(1)},\frac{B(1)}{s(1)}\right)f\left(\frac{yt(2)+Y-b_i}{s(2)},\frac{B(2)}{s(2)}\right)\right]\right\} \tag{3.20}$$

$$\times h\left(x,\frac{A(1)}{t(1)}\right)h\left(y,\frac{A(2)}{t(2)}\right)dxdy.$$

Equation (3.20) is the basis for obtaining $K(15)$ in the machine program.

Expanding the product in (3.20), we obtain an alternate expression for K, i.e.,

$$(3.21)\qquad K(X,Y)=\sum_{k=1}^{N(1)}(-1)^{k-1}\sum^{\binom{N(1)}{k}}\int_{-\infty}^{\infty}\prod_{j=1}^{k}f\left(\frac{xt(1)+X-a_{i_j}}{s(1)},\frac{B(1)}{s(1)}\right)h\left(x,\frac{A(1)}{t(1)}\right)dx$$

$$\times\int_{-\infty}^{\infty}\prod_{j=1}^{k}f\left(\frac{yt(2)+Y-b_{i_j}}{s(2)},\frac{B(2)}{s(2)}\right)h\left(y,\frac{A(2)}{t(2)}\right)dy.$$

We note that we have a sum of products involving only a single integration rather than a double integration as in (3.20). For the salvo case, we obtain from (3.21)

$$(3.22)\qquad K(X,Y)=\sum_{k=1}^{N(1)}(-1)^{k-1}\binom{N(1)}{k}$$

$$\times\int_{-\infty}^{\infty}f^{k}\left(\frac{xt(1)+X}{s(1)},\frac{B(1)}{s(1)}\right)h\left(x,\frac{A(1)}{t(1)}\right)dx\int_{-\infty}^{\infty}f^{k}\left(\frac{yt(2)+Y}{s(2)},\frac{B(2)}{s(2)}\right)h\left(y,\frac{A(2)}{t(2)}\right)dy.$$

Equations (3.21) and (3.22) form the basis for obtaining $X(5)$ in the machine program. Again $X(5)$ and $X(15)$ are equivalent expressions for K, but differ in the method of computation.

3.3. ELLIPTICAL TARGET AREA: FRAGMENT-SENSITIVE TARGET

Consider an elliptical target area with axes $A(3)$ and $A(4)$ in the x and y directions. The fraction coverage $K(X,Y)$ for this target area is given by (2.23). Specifically, we have

$$(3.23)\qquad K(X,Y)=\int_{A}\iint_{-\infty}^{\infty}\int_{-\infty}^{\infty}D_p(u-X,v-Y)g\left(\frac{x}{t(1)}\right)g\left(\frac{y}{t(2)}\right)\frac{dxdydudv}{\pi t(1)t(2)A(3)A(4)},$$

where A is defined by

$$\left[\frac{u-X}{A(3)}\right]^2+\left[\frac{v-Y}{A(4)}\right]^2\le 1.$$

For a fragment-sensitive target, the pattern damage function $D_p(u,v)$ is given by Eq. (3.6), the same as was used in Sec. 3.1. Expanding the product in (3.6),

substituting in (3.3), and integrating as in Eq. (3.9), we obtain an expression for K that is similar to (3.9):

$$K(X,Y)=\sum_{k=1}^{N(1)}(-1)^{k-1}\left[\frac{pR(1)R(2)}{2q(1)q(2)}\right]^{k}\left[\frac{q(1)q(2)}{kQ(1)Q(2)}\right]^{\binom{N(1)}{k}}\sum\exp\left(-\frac{k(\overline{a^2}-\overline{a}^2)}{2q^2(1)}\right)\exp\left(-\frac{k(\overline{b^2}-\overline{b}^2)}{2q^2(2)}\right),$$

(3.24)

$$\cdot\iint_A\exp\left(-\frac{1}{2}\left\{\left[\frac{u-\overline{a}}{Q(1)}\right]^2+\left[\frac{v-\overline{b}}{Q(2)}\right]^2\right\}\right)\frac{dudv}{\pi A(3)A(4)},$$

where A is given in (3.23) and the other symbols are as defined in (3.10).

Consider the integral expression I_2 in (3.24); i.e.,

(3.25)
$$I_2=\iint_A\exp\left(-\frac{1}{2}\left\{\left[\frac{u-\overline{a}}{Q(1)}\right]^2+\left[\frac{v-\overline{b}}{Q(2)}\right]^2\right\}\right)\frac{dudv}{\pi A(3)A(4)}$$

$$=\frac{2Q(1)Q(2)}{A(3)A(4)}\left[\iint_{C_1}\exp\left(-\frac{1}{2}(u^2+v^2)\right)\frac{dudv}{2\pi}\right],$$

where

$$C_1:\frac{\{[u-(X-\overline{a})]/Q(1)\}^2}{[A(3)/Q(1)]^2}+\frac{\{[v-(Y-\overline{b})]/Q(2)\}^2}{[A(4)/Q(2)]^2}\le 1.$$

Define the offset ellipse function $P(A,B;x,y)$ as the integral of a gaussian distribution of unit standard deviation over an offset ellipse, center at (x,y), with axes A and B in the x and y directions, respectively; i.e.,

(3.26)
$$P(A,B;x,y)\equiv\iint_{C_2}\exp\left(-\frac{1}{2}(\zeta^2+\eta^2)\right)\frac{d\zeta d\eta}{2\pi},$$

where

$$C_2:\frac{(\zeta-x)^2}{A^2}+\frac{(\eta-y)^2}{B^2}\le 1.$$

Thus, the integral I_2 in (3.25) becomes

$$I_2=\frac{2Q(1)Q(2)}{A(3)A(4)}P\left(\frac{A(3)}{Q(1)},\frac{A(4)}{Q(2)};\frac{X-\bar{a}}{Q(1)},\frac{Y-\bar{b}}{Q(2)}\right).$$

Substituting in (3.24), we obtain the expression for $K(X,Y)$:

$$K(X,Y)=\sum_{k=1}^{N(1)}(-1)^{k-1}\left[\frac{pR(1)R(2)}{2q(1)q(2)}\right]^k\left[\frac{q(1)q(2)}{kA(3)A(4)}\right] \tag{3.27}$$

$$\times\sum^{\binom{N(1)}{k}}\exp\left(-\frac{k}{2}\left[\frac{\overline{a^2}-\bar{a}^2}{q^2(1)}+\frac{\overline{b^2}-\bar{b}^2}{q^2(2)}\right]\right)P\left(\frac{A(3)}{Q(1)},\frac{A(4)}{Q(2)};\frac{X-\bar{a}}{Q(1)},\frac{Y-\bar{b}}{Q(2)}\right),$$

where $P(A,B;X,Y)$ is defined in (3.26). Tables of the offset ellipse function are available in the open literature.

In (3.26), if $A=B=R$, i.e., if the ellipse becomes a circle, the offset ellipse function becomes the offset circle function, i.e.,

$$P(R,R;x,y)=P(R,\sqrt{x^2+y^2}),$$

where $P(R,r)$ is defined as

$$P(R,r)=\int_{x^2+y^2\le R^2}g(x-r)g(y)\,dx\,dy, \tag{3.28}$$

$$=\int_0^R x\,\exp\left(-\frac{1}{2}(x^2+r^2)\right)I_0(rx)\,dx,$$

where $I_0(x)$ is the zero-order Bessel function of the first kind with imaginary argument.

Consider the special case

$$Q(1)=Q(2) \quad \text{and} \quad A(3)=A(4),$$

i.e., the target is a circle of radius $A(3)$.

$$(3.29) \qquad K(X,Y)=\sum_{k=1}^{N(1)}(-1)^{k-1}\left[\frac{pR(1)R(2)}{2q(1)q(2)}\right]^{k}\left[\frac{q(1)q(2)}{kA(3)^{2}}\right]$$

$$\times\sum^{\binom{N(1)}{k}}\exp\left(-\frac{k}{2}\left[\frac{\overline{a^{2}}-\overline{a}^{2}}{q^{2}(1)}+\frac{\overline{b^{2}}-\overline{b}^{2}}{q^{2}(2)}\right]\right)P\left(\frac{A(3)}{Q(1)},\frac{\sqrt{(X-\overline{a})^{2}+(Y-\overline{b})^{2}}}{Q(1)}\right),$$

where $P(R,r)$ is defined in (3.28). For the salvo case, this expression reduces to

$$(3.30) \qquad K(X,Y)=\sum_{k=1}^{N(1)}(-1)^{k-1}\binom{N(1)}{k}\left[\frac{pR(1)R(2)}{2q(1)q(2)}\right]^{k}\left[\frac{q(1)q(2)}{kA(3)^{2}}\right]P\left(\frac{A(3)}{Q(1)},\frac{\sqrt{X^{2}+Y^{2}}}{Q(1)}\right).$$

4. DISPENSER-TYPE DELIVERIES AGAINST RECTANGULAR TARGET AREAS

Let us consider a dispenser-type delivery. This type includes both the mass delivery of a number of weapons and the delivery of a sequence of weapons at timed intervals. The latter type is similar to the ripple delivery of the previous section except that the ballistic dispersion of the individual weapon is not necessarily gaussian, and the number delivered may be much larger than in the case of Sec. 3.

The dispensers themselves may stay with the delivery vehicle (no ballistic errors for the dispenser) or may be released in the ripple mode and thus be subject to dispenser ballistic errors. In either case, the subweapons are distributed according to some type of pattern distribution. In addition to the ballistic distributions of Sec. 3, we will also consider cases in which the subweapons are uniformly distributed over a pattern (rectangle, ellipse, annulus). We will view these pattern distributions as ballistic error distributions for the individual subweapons. Thus, we have cases where there are two ballistic error distributions, one for the dispenser and one for the individual subweapons.

We will consider, in turn, the following types of subweapon distribution functions:

1. Stick distribution in range; gaussian distribution in deflection.
2. Uniform distribution in range and deflection (over a rectangle).
3. Uniform distribution over an ellipse.
4. Uniform distribution over an elliptic annulus.

In this section we restrict ourselves to the consideration of either point targets or rectangular target areas of dimensions $[2A(1),2A(2)]$.

4.1. RIPPLE-TYPE DISPENSER DELIVERIES

We consider first a sequence of $N(2)$ weapons delivered at timed intervals, i.e., with centers of impact forming a pattern $(a_i,b_i), i=1,2,3,\ldots,N(2)$. This type of delivery is similar to the type of delivery of Sec. 3 except that several

patterns may be delivered at once, either with the same aiming points or with offset aiming points, which involve the delivery of several tubes in a container or from several containers. Further, the ballistic data for the subweapon are usually not obtained for each weapon individually. The ballistic errors in deflection are assumed to be gaussian, but the range errors are governed by an empirical distribution.

We assume each of the $N(2)$ weapons to be aimed individually at the center point of the pattern. We fit the empirical data for range dispersion by assuming that its distribution $K_1(X)$ is the stick distribution:

$$K_1(X)=H\left(\frac{X}{q(0)},\frac{L(1)}{q(0)}\right)=\int_{-\infty}^{X} h\left(\frac{x}{q(0)},\frac{L(1)}{q(0)}\right)\frac{dx}{q(0)}, \tag{4.1}$$

where $L(1)$ is the "length" of the stick, and $q(0)$ is a parameter of the distribution. Appendix B contains a discussion of this pattern.

The ballistic distribution in deflection is gaussian with standard deviation $s(2)$. Consider a single weapon against a target element at (u,v). The kill probability $D_b(u,v)$ is given by

$$D_b(u,v)=\int_{-\infty}^{\infty}\int_{-\infty}^{\infty} D(u-x,v-y)h\left(\frac{x}{q(0)},\frac{L(1)}{q(0)}\right)g\left(\frac{y}{s(2)}\right)\frac{dxdy}{s(2)q(0)}, \tag{4.2}$$

where $D(u-x,v-y)$ is the damage function. If $N(2)$ weapons are released from the dispenser with pattern center at (0,0), the kill probability $D_D(u,v)$ to a target element at (u,v) due to a single dispenser is

$$D_D(u,v)=1-[1-pD_b(u,v)]^{N(2)}, \tag{4.3}$$

where $D_b(u,v)$ is as given in (4.2), and p is the subweapon reliability factor. We define r as the probability of a dispenser operating properly, i.e., the dispenser reliability factor. If there are $N(1)$ dispensers with pattern centers at (a_i,b_i), a pattern of dispensers is formed. Thus, the kill probability $D_p(u,v)$ due to the whole pattern is

$$D_p(u,v)=1-\prod_{i=1}^{N(1)}[1-rD_D(u-a_i,v-b_i)] \tag{4.4}$$

$$=1-\prod_{i=1}^{N(1)}[1-r\{1-[1-pD_b(u-a_i,v-b_i)]^{N(2)}\}].$$

4.1.1. Fragment-sensitive Targets

For a fragment-sensitive target, substituting the damage function (2.1) in (4.2), we obtain for $D_b(u,v)$ the expression

$$D_b(u,v)=D_0\int_{-\infty}^{\infty}\exp\left(-D_0\left[\frac{u-x}{R(1)}\right]^2\right)h\left(\frac{x}{q(0)},\frac{L(1)}{q(0)}\right)\frac{dx}{q(0)} \tag{4.5}$$

$$\times\int_{-\infty}^{\infty}\exp\left(-D_0\left[\frac{v-y}{R(2)}\right]^2\right)g\left(\frac{y}{s(2)}\right)\frac{dy}{s(2)}.$$

The integrals are evaluated using App. D; Lemma 6 is used for the first integral and Lemma 1 for the second integral. We obtain

$$D_b(u,v)=\left[\frac{\sqrt{\pi}R(1)}{q(3)}h\left(\frac{u}{q(3)},\frac{L(1)}{q(3)}\right)\right]\left[\frac{R(2)}{\sqrt{2}q(2)}\exp\left(-\frac{v^2}{2q^2(2)}\right)\right], \tag{4.6}$$

where

$$q^2(2)=\frac{R^2(2)}{2D_0}+s^2(2),$$

(4.7)

$$q^2(3)=\frac{R^2(1)}{2D_0}+q^2(0).$$

Using (4.6) in (4.4) to get $D_p(u,v)$ and substituting in (3.27) to obtain the coverage $K(X,Y)$, we have

$$(4.8)\qquad K(X,Y)=\int_{-\infty}^{\infty}\int_{-\infty}^{\infty}\left(1-\prod_{i=1}^{N(1)}\left\{1-r\left[1-\left\{1-\frac{p\sqrt{\pi}R(1)}{q(3)}\right.\right.\right.\right.$$

$$\left.\left.\left.\times h\left(\frac{xt(1)+X-a_i}{q(3)},\frac{L(1)}{q(3)}\right)\frac{R(2)}{\sqrt{2}q(2)}\exp\left(-\frac{1}{2}\left[\frac{yt(2)+Y-b_i}{q(2)}\right]^2\right)\right\}^{N(2)}\right]\right\}\right)$$

$$\times h\left(x,\frac{A(1)}{t(1)}\right)h\left(y,\frac{A(2)}{t(2)}\right)dxdy.$$

If $r=1$, we obtain

$$(4.9)\qquad K(X,Y)=\int_{-\infty}^{\infty}\int_{-\infty}^{\infty}\left[1-\prod_{i=1}^{N(1)}\left\{1-\frac{p\sqrt{\pi}R(1)}{q(3)}h\left(\frac{xt(1)+X-a_i}{q(3)},\frac{L(1)}{q(3)}\right)\right.\right.$$

$$\left.\left.\times\frac{R(2)}{\sqrt{2}q(2)}\exp\left(-\frac{1}{2}\left[\frac{yt(2)+Y-b_i}{q(2)}\right]^2\right)\right\}^{N(2)}\right]h\left(x,\frac{A(1)}{t(1)}\right)h\left(y,\frac{A(2)}{t(2)}\right)dxdy.$$

The expression for $K(X,Y)$ in (4.9) forms the basis for $X(12)$ in the machine program.

For a single dispenser, $N(1)=1$, we expand the expression in (4.9) to obtain

$$(4.10)\quad K(X,Y)=\sum_{k=1}^{N(2)}(-1)^{k-1}\binom{N(2)}{k}\left[\frac{p\sqrt{\pi}R(1)}{q(3)}\right]^k\int_{-\infty}^{\infty}h^k\left(\frac{xt(1)+X}{q(3)},\frac{L(1)}{q(3)}\right)h\left(x,\frac{A(1)}{t(1)}\right)dx$$

$$\times\left[\frac{R(2)}{\sqrt{2}q(2)}\right]^k\int_{-\infty}^{\infty}\exp\left(-\frac{k}{2}\left[\frac{yt(2)+Y}{q(2)}\right]^2\right)h\left(y,\frac{A(2)}{t(2)}\right)dy.$$

The second integral may be evaluated using Lemma 6 of App. D, so that

$$(4.11)\quad K(X,Y)=\sum_{k=1}^{N(2)}(-1)^{k-1}\binom{N(2)}{k}\left[\frac{R(2)}{\sqrt{2}q(2)}\right]^k\sqrt{\frac{2\pi}{k}}h\left(\frac{X}{Q(2)},\frac{A(2)}{Q(2)}\right)\int_{-\infty}^{\infty}h^k\left(\frac{xt(1)+X}{q(3)},\frac{L(1)}{q(3)}\right)h\left(x,\frac{A(1)}{t(1)}\right)dx,$$

where $q(2)$ and $q(3)$ are given in (4.7) and

$$Q^2(2)=\frac{q^2(2)}{k}+t^2(2).$$

Equation (4.11) forms the basis for $X(2)$ in the machine program, and $X(2)$ and $X(12)$ are thus also equivalent except for the difference in computational methods.

4.1.2. Impact-sensitive Targets

For a hard target-type subweapon, substituting the damage function (3.1) in (4.2), we obtain for $D_b(u,v)$

$$D_b(u,v)=p_{dk}\int_{u-B(1)}^{u+B(1)} h\left(\frac{x}{q(0)},\frac{L(1)}{q(0)}\right)\frac{dx}{q(0)}\int_{v-B(2)}^{v+B(2)} g\left(\frac{y}{s(2)}\right)\frac{dy}{s(2)}.$$

Thus, we can express $D_b(u,v)$ as

$$D_b(u,v)=F\left(\frac{u}{q(0)},\frac{B(1)}{q(0)},\frac{L(1)}{q(0)}\right)f\left(\frac{v}{s(2)},\frac{B(2)}{s(2)}\right)p_{dk}, \tag{4.12}$$

where the function $F(x,y,L)$ is defined as

$$F(x,y,L)=H(x+y,L)-H(x-y,L),$$

and $H(x,L)$ is defined in (2.19), and $f(x,y)$ is defined in (3.16). Using (4.12) in (4.4) to obtain $D_p(u,v)$ and substituting in (3.20) to get the coverage $K(X,Y)$, we obtain

$$K(X,Y)=\int_{-\infty}^{\infty}\int_{-\infty}^{\infty}\left\{1-\prod_{i=1}^{N(1)}\left[1-p'F\left(\frac{xt(1)+X-a_i}{q(0)},\frac{B(1)}{q(0)},\frac{L(1)}{q(0)}\right)\right.\right. \tag{4.13}$$

$$\left.\left.\times f\left(\frac{yt(2)+Y-b_i}{s(2)},\frac{B(2)}{s(2)}\right)\right]^{N(2)}\right\}h\left(x,\frac{A(1)}{t(1)}\right)h\left(y,\frac{A(2)}{t(2)}\right)dxdy,$$

where p' is as defined in (3.19). The expression for $K(X,Y)$ in (4.13) forms the basis for $X(14)$ in the machine program.

For a single dispenser, $N(1)=1$, we expand the expression in (4.13) to obtain

$$(4.14)\qquad K(X,Y)=\sum_{k=1}^{N(2)}(-1)^{k-1}\binom{N(2)}{k}(p')^k\int_{-\infty}^{\infty}f^k\left(\frac{xt(1)+X}{q(0)},\frac{B(1)}{q(0)},\frac{L(1)}{q(0)}\right)$$

$$\times h\left(x,\frac{A(1)}{t(1)}\right)dx\int_{-\infty}^{\infty}f^k\left(\frac{yt(2)+Y}{s(2)},\frac{B(2)}{s(2)}\right)h\left(y,\frac{A(2)}{t(2)}\right)dy.$$

The expression for $K(X,Y)$ in (4.14) forms the basis for $X(4)$ in the machine program. Again $X(4)$ and $X(14)$ are equivalent but are computed differently.

4.1.3. Approximate Method: Fragment-sensitive Target

In the problem considered in Sec. 4.1.1 for a fragmentation-type weapon, we can simplify the expression for $K(X,Y)$ if the range offsets $a_i=0$ by an approximation for the range ballistic distribution. Referring to the expression for $D_b(u,v)$ in (4.6), we have

$$\frac{h\left(\frac{u}{q(3)},\frac{L(1)}{q(3)}\right)}{q(3)},$$

which is a density function for a distribution function. If we replace this function by a uniform distribution $\alpha(u,L(5))/2L(5)$, where α is defined in (2.9), we obtain the approximate expression for $D_b(u,v)$:

$$(4.15)\qquad D_b(u,v)=\frac{\sqrt{\pi}R(1)}{2L(5)}\alpha(u,L(5))\left[\frac{R(2)}{\sqrt{2}q(2)}\exp\left(-\frac{v^2}{2q^2(2)}\right)\right].$$

We will demand that the functions $h(u/q(3),L(1)/q(3))/q(3)$ and $\alpha(u,L(5))/2L(5)$ have the same variance. Then $L(5)$ is determined by

$$(4.16)\qquad L^2(5)=L^2(1)+3q^2(3).$$

Using (4.15) in (4.4) to determine $D_D(u,v)$, we obtain

$$D_D(u,v)=\alpha(u,L(5))\left[1-\prod_{i=1}^{N(1)}\left\{1-p\frac{\sqrt{\pi}R(1)}{2L(5)}\frac{R(2)}{\sqrt{2}q(2)}\exp\left(-\frac{1}{2}\left[\frac{v-b_i}{q(2)}\right]^2\right)\right\}^{N(2)}\right].$$

Substituting for $D_D(u,v)$ in (2.27), we obtain the coverage $K(X,Y)$:

$$(4.17)\qquad K(X,Y)=\int_{-\infty}^{\infty}\alpha(xt(1)+X,L(5))h\left(x,\frac{A(1)}{t(1)}\right)dx\int_{-\infty}^{\infty}\left[1-\prod_{i=1}^{N(1)}\left\{1-\frac{p\sqrt{\pi}R(1)R(2)}{2L(5)\sqrt{2}q(2)}\right.\right.$$

$$\left.\left.\times\exp\left(-\frac{1}{2}\left[\frac{yt(2)+Y-b_i}{q(2)}\right]^2\right)\right\}^{N(2)}\right]h\left(y,\frac{A(2)}{t(2)}\right)dy.$$

Using the definition of $F(x,y,L)$ in (4.12), we find that the first integral in (4.17) is

$$F\left(-\frac{X}{t(1)},\frac{L(5)}{t(1)},\frac{A(1)}{t(1)}\right).$$

Since $F(-x,y,L)=F(x,y,L)$, we obtain for $K(X,Y)$ from (4.17)

$$(4.18)\qquad K(X,Y)=F\left(\frac{X}{t(1)},\frac{L(5)}{t(1)},\frac{A(1)}{t(1)}\right)\int_{-\infty}^{\infty}\left[1-\prod_{i=1}^{N(1)}\left\{1-\frac{p\sqrt{\pi}R(1)R(2)}{2L(5)\sqrt{2}q(2)}\right.\right.$$

$$\left.\left.\times\exp\left(-\frac{1}{2}\left[\frac{yt(2)+Y-b_i}{q(2)}\right]^2\right)\right\}^{N(2)}\right]h\left(y,\frac{A(2)}{t(2)}\right)dy.$$

Equation (4.18) forms the basis for $X(13)$ in the machine program.

If $N(1)=1$, expanding the expression in (4.18), we obtain

$$K(X,Y)=F\left(\frac{X}{t(1)},\frac{L(5)}{t(1)},\frac{A(1)}{t(1)}\right)\sum_{k=1}^{N(2)}(-1)^{k-1}\binom{N(2)}{K}\left[\frac{p\sqrt{\pi}R(1)R(2)}{2L(5)\sqrt{2}q(2)}\right]^k$$

$$\times\int_{-\infty}^{\infty}\exp\left(-\frac{k}{2}\left[\frac{yt(2)+Y}{q(2)}\right]^2\right)h\left(y,\frac{A(2)}{t(2)}\right)dy.$$

Evaluating the integral using Lemma 6 of App. D, we obtain

$$(4.19)\qquad K(X,Y)=F\left(\frac{X}{t(1)},\frac{L(5)}{t(1)},\frac{A(1)}{t(1)}\right)\sum_{k=1}^{N(2)}(-1)^{k-1}\binom{N(2)}{k}\left[\frac{p\sqrt{\pi}R(1)R(2)}{2L(5)\sqrt{2}q(2)}\right]^k$$

$$\times\sqrt{\frac{2\pi}{k}}\,\frac{q(2)}{Q(2)}h\left(\frac{Y}{Q(2)},\frac{A(2)}{Q(2)}\right).$$

Equation (4.19) for $K(X,Y)$ forms the basis for $X(3)$ in the machine program. The expressions $X(3)$ and $X(13)$ are equivalent here for K when different computational methods are used.

4.2. UNIFORM DISTRIBUTION OVER A RECTANGLE

We consider a ripple of dispensers whose subweapon distribution is uniform in range and deflection over a rectangle. Each dispenser is assumed subject to ballistic errors according to a gaussian distribution with standard deviations $s(3)$ and $s(4)$. The centers of impact of (a_i,b_i) refer to the center point of the dispenser pattern. Each dispenser is assumed to release the subweapons so that the distribution of the subweapon is uniform over a rectangle $[2L(3),2L(4)]$. If the pattern center is at (0,0), the kill probability $D_b(u,v)$ to a target element at (u,v) due to a specific weapon is

$$D_b(u,v)=\int_{-L(3)}^{L(3)}\int_{-L(4)}^{L(4)} D(u-x,v-y)\frac{dxdy}{4L(3)L(4)}, \tag{4.20}$$

where $D(u-x,v-y)$ is the damage function.

If $N(2)$ weapons are released and if the center point of the pattern is at (0,0), the kill probability from a dispenser, $D_D(u,v)$, is

$$D_D'(u,v)=1-[1-pD_b(u,v)]^{N(2)}, \tag{4.21}$$

where $D_b(u,v)$ is given by (4.20), and p is the subweapon reliability factor. The dispenser is subject to a gaussian ballistic error, so that $D_D(u,v)$, the dispenser kill probability, is given by

$$D_D(u,v)=\int_{-\infty}^{\infty}\int_{-\infty}^{\infty} D_D'(u-x,v-y)g\left(\frac{x}{s(3)}\right)g\left(\frac{y}{s(4)}\right)\frac{dxdy}{s(3)s(4)} \tag{4.22}$$

$$=\int_{-\infty}^{\infty}\int_{-\infty}^{\infty}\left\{1-[1-pD_b(u-x,v-y)]^{N(2)}\right\}g\left(\frac{x}{s(3)}\right)g\left(\frac{y}{s(4)}\right)\frac{dxdy}{s(3)s(4)}.$$

4.2.1. Fragment-sensitive Target

For a fragment-sensitive target, substituting the damage function (2.1) in (4.20), we obtain

$$D_b(u,v)=\int_{-L(3)}^{L(3)}\int_{-L(4)}^{L(4)} D_0 \exp\left(-D_0\left\{\left[\frac{u-x}{R(1)}\right]^2+\left[\frac{v-y}{R(2)}\right]^2\right\}\right)\frac{dxdy}{4L(3)L(4)}$$

$$=\frac{\pi R(1)R(2)}{\gamma(1)\gamma(2)}h\left(\frac{u}{\gamma(1)},\frac{L(3)}{\gamma(1)}\right)h\left(\frac{v}{\gamma(2)},\frac{L(4)}{\gamma(2)}\right),$$

where

$$\gamma^2(1)=\frac{R^2(1)}{2D_0},$$

$$\gamma^2(2)=\frac{R^2(2)}{2D_0}.$$

The expression for $D_D(u,v)$ from (4.22) is thus

$$(4.23)\qquad D_D(u,v)=\int_{-\infty}^{\infty}\int_{-\infty}^{\infty}\left\{1-\left[1-\frac{p\pi R(1)R(2)}{\gamma(1)\gamma(2)}h\left(\frac{u-x}{\gamma(1)},\frac{L(3)}{\gamma(1)}\right)h\left(\frac{v-y}{\gamma(2)},\frac{L(4)}{\gamma(2)}\right)\right]^{N(2)}\right\}$$

$$\times g\left(\frac{x}{s(3)}\right)g\left(\frac{y}{s(4)}\right)\frac{dxdy}{s(3)s(4)}.$$

a. Approximation 1: Ballistic Error, No Edge Effects. The computational methods based on (2.27) will not work if the expression for $D_D(u,v)$ contains an integral. Thus, expression (4.23) must be simplified. One method is to replace the density functions in (4.23):

$$\frac{h\left(\frac{u}{\gamma(1)},\frac{L(3)}{\gamma(1)}\right)}{\gamma(1)} \quad \text{and} \quad \frac{h\left(\frac{v}{\gamma(2)},\frac{L(4)}{\gamma(2)}\right)}{\gamma(2)}$$

by the uniform density functions

$$\frac{\alpha(u,L(5))}{2L(5)} \quad \text{and} \quad \frac{\alpha(v,L(6))}{2L(6)},$$

where $\alpha(x,L)$ is as defined in (2.9) and variances are equal. Thus, $L(5)$ and $L(6)$ are given by

$$L^2(5)=L^2(3)+3\gamma^2(1)=L^2(3)+\frac{3R^2(1)}{2D_0},$$

(4.24)

$$L^2(6)=L^2(4)+3\gamma^2(2)=L^2(4)+\frac{3R^2(2)}{2D_0}.$$

Essentially, we are assuming the ratios $R(1)/L(3)$ and $R(2)/L(4)$ are small. We enlarge the pattern $[2L(3),2L(4)]$ to be $[2L(5),2L(6)]$ and assume no edge effects in the enlarged pattern. Thus, we have

$$(4.25)\qquad D_D(u,v)=\left\{1-\left[1-\frac{p\pi R(1)R(2)}{4L(5)L(6)}\right]^{N(2)}\right\}\frac{1}{4L(5)L(6)}$$

$$\times\int_{-\infty}^{\infty}\int_{-\infty}^{\infty}\alpha(u-x,L(5))\alpha(v-y,L(6))g\left(\frac{x}{s(3)}\right)g\left(\frac{y}{s(4)}\right)\frac{dxdy}{s(3)s(4)}.$$

If $s(3)$ and $s(4)>0$ and we use the definition of $f(x,y)$ in (3.16), the expression for $D_D(u,v)$ becomes

$$(4.26)\qquad D_D(u,v)=\left\{1-\left[1-\frac{p\pi R(1)R(2)}{4L(5)L(6)}\right]^{N(2)}\right\}f\left(\frac{u}{s(3)},\frac{L(5)}{s(3)}\right)f\left(\frac{v}{s(4)},\frac{L(6)}{s(4)}\right).$$

When we use (4.26) for a ripple of $N(1)$ dispensers with CI's at (a_i,b_i), the kill probability $D_p(u,v)$ due to the whole ripple is

$$(4.27)\quad D_p(u,v)=1-\prod_{i=1}^{N(1)}[1-rD_D(u-a_i,v-b_i)]$$

$$=1-\prod_{i=1}^{N(1)}\left[1-r\left\{1-\left[1-\frac{p\pi R(1)R(2)}{4L(5)L(6)}\right]^{N(2)}\right\}f\left(\frac{u-a_i}{s(3)},\frac{L(5)}{s(3)}\right)f\left(\frac{v-b_i}{s(4)},\frac{L(6)}{s(4)}\right)\right],$$

where r is the dispenser reliability factor.

Substituting the expression for $D_p(u,v)$ as given by (4.27) in (2.27), we obtain

$$(4.28)\quad K(X,Y)=\int_{-\infty}^{\infty}\int_{-\infty}^{\infty}\left\{1-\prod_{i=1}^{N(1)}\left[1-r\left\{1-\left[1-\frac{p\pi R(1)R(2)}{4L(5)L(6)}\right]^{N(2)}\right\}f\left(\frac{xt(1)+X-a_i}{s(3)},\frac{L(5)}{s(3)}\right)\right.\right.$$

$$\left.\left.\times f\left(\frac{yt(2)+Y-b_i}{s(4)},\frac{L(6)}{s(4)}\right)\right]\right\}h\left(x,\frac{A(1)}{t(1)}\right)h\left(y,\frac{A(2)}{t(2)}\right)dxdy.$$

Equation (4.28) forms the basis for $X(103)$ in the machine program. For only one dispenser, we can integrate the expression in (4.28), using Lemma 6 of App. D:

$$(4.29)\quad K(X,Y)=r\left\{1-\left[1-\frac{p\pi R(1)R(2)}{4L(5)L(6)}\right]^{N(2)}\right\}F\left(\frac{X}{t(3)},\frac{L(5)}{t(3)},\frac{A(1)}{t(3)}\right)F\left(\frac{Y}{t(4)},\frac{L(6)}{t(4)},\frac{A(2)}{t(4)}\right),$$

where $F(x,y,L)$ is defined in (4.12) and $t(3)$ and $t(4)$ are defined by

$$(4.30)\quad \begin{aligned} t^2(3)&=t^2(1)+s^2(3),\\ t^2(4)&=t^2(2)+s^2(4).\end{aligned}$$

The expression for the coverage $K(X,Y)$ in (4.29) is for the case of a single dispenser rectangular pattern where the ratio of the subweapon MAE (mean effective area) to the pattern area $[4L(3)L(4)]$ is small. It can also be considered as an approximation to the case discussed in Sec. 4.1.3, "Approximate Method: Fragment-sensitive Target." For the range dimension $L(5)$, we use the value obtained in (4.16), i.e.,

$$L^2(5)\approx L^2(1)+3q^2(3)=L^2(1)+3q^2(0)+\frac{3R^2(1)}{2D_0}$$

and equivalently

$$(4.31)\quad L^2(3)=L^2(1)+3q^2(0).$$

We make a similar approximation in deflection, again equating variances, and obtain

$$L^2(6)=3q^2(2)=3s^2(2)+\frac{3R^2(2)}{2D_0},$$

and equivalently

$$L^2(4)=3s^2(2). \tag{4.32}$$

Equation (3.29) with $L(3)$ and $L(4)$ given by (4.31) and (4.32) form the basis for $X(10)$ in the machine program.

b. Approximation 2: Edge Effects, No Ballistic Error. A second approximation for $D(u,v)$ in (4.23) may be made if $s(3)$ and $s(4)$ are small with respect to $L(1)$ and $L(2)$. We then assume $s(3)=s(4)=0$, so that $D_D(u,v)$ is given simply by

$$D_D(u,v)=1-\left[1-\frac{p\pi R(1)R(2)}{\gamma(1)\gamma(2)}h\left(\frac{u}{\gamma(1)},\frac{L(3)}{\gamma(1)}\right)h\left(\frac{v}{\gamma(2)},\frac{L(4)}{\gamma(2)}\right)\right]^{N(2)}. \tag{4.33}$$

For a ripple of $N(1)$ dispensers, the kill probability $D_p(u,v)$ due to the whole ripple is

$$D_D(u,v)=1-\prod_{i=1}^{N(1)}\left[1-r\left\{1-\left[1-\frac{p\pi R(1)R(2)}{\gamma(1)\gamma(2)}h\left(\frac{u-a_i}{\gamma(1)},\frac{L(3)}{\gamma(1)}\right)h\left(\frac{v-b_i}{\gamma(2)},\frac{L(4)}{\gamma(2)}\right)\right]^{N(2)}\right\}\right]. \tag{4.34}$$

Substituting (4.34) in (2.27), we obtain

$$K(X,Y)=\int_{-\infty}^{\infty}\int_{-\infty}^{\infty}\left\{1-\prod_{i=1}^{N(1)}\left[i-r\left\{1-\left[1-\frac{p\pi R(1)R(2)}{\gamma(1)\gamma(2)}h\left(\frac{xt(1)+X-a_i}{\gamma(1)},\frac{L(3)}{\gamma(1)}\right)\right.\right.\right.\right.$$
$$\left.\left.\left.\left.\times h\left(\frac{yt(2)+Y-b_i}{\gamma(2)},\frac{L(4)}{\gamma(2)}\right)\right]^{N(2)}\right\}\right]\right\}h\left(x,\frac{A(1)}{t(1)}\right)h\left(y,\frac{A(2)}{t(2)}\right)dxdy. \tag{4.35}$$

Equation (4.35) forms the basis for $X(104)$ in the machine program. The expressions for $K(X,Y)$ in (4.28) and (4.35) are arswers to the same problem but different approximations are used; i.e., $X(103)$ and $X(104)$ are equivalent.

4.2.2. Impact-sensitive Target

For an impact-sensitive target, by substituting the damage function (2.8) in (4.20), we obtain for $D_b(u,v)$

$$D_b(u,v)=p_{dk}\int_{-L(3)}^{L(3)}\int_{-L(4)}^{L(4)}\alpha(u-x,B(1))\alpha(v-y,B(2))\frac{dxdy}{4L(3)L(4)}. \tag{4.36}$$

We will assume that $L(3)/B(1)>1$ and $L(4)/B(2)>1$. Define $\beta(x,B,L)$ as the integral of two α functions, i.e.,

$$\beta(x,B,L)\equiv\int_{-\infty}^{\infty}\alpha(x-y,B)\alpha(y,L)\,dy. \tag{4.37}$$

Thus, we have

$$\beta(x,B,L)=\begin{cases}1 & |x|<L-B,\\ L+B-x & L-B\le|x|\le L+B,\\ 0 & |x|>L+B.\end{cases} \tag{4.38}$$

The function $\beta(x,B,L)/4BL$ is a density function with variance L^2+B^2. When we use (4.37) and (4.38), $D_b(u,v)$ in (4.36) becomes

$$D_b(u,v)=\frac{p_{dk}\beta(u,B(1),L(3))\beta(v,B(2),L(4))}{4L(3)L(4)}. \tag{4.39}$$

For a single dispenser, $D_D(u,v)$ is given by

$$D_D(u,v)=1-\int_{-\infty}^{\infty}\int_{-\infty}^{\infty}\left[1-p'\beta(u-x,B(1),L(3))\frac{\beta(v-y,B(2),L(4))}{4L(3)L(4)}\right]^{N(2)} \tag{4.40}$$

$$\times g\left(\frac{x}{s(3)}\right)g\left(\frac{y}{s(4)}\right)\frac{dxdy}{s(3)s(4)},$$

where $p'=pp_{dk}$ as in (3.19).

a. Approximation 1: Ballistic Error, No Edge Effects. As for the fragmentation case in Sec. 4.2.1, we must make an approximation for D_D in (4.40). As one approximation, we will replace the density function $\beta(u,B(1),L(3))/4B(1)L(3)$ in (4.40) by the density function $\alpha(u,L(5))/2L(5)$, again requiring equal variances. Thus, we let

(4.41) $$\frac{\beta(u,B(1),L(3))}{4B(1)L(3)}\pm\frac{\alpha(u,L(5))}{2L(5)},$$

where

(4.42) $$L^2(5)=L^2(3)+B^2(1).$$

Similarly, we let

(4.43) $$\frac{\beta(v,B(2),L(4))}{4B(2)L(4)}\pm\frac{\alpha(v,L(6))}{2L(6)},$$

where

(4.44) $$L^2(6)=L^2(4)+B^2(2).$$

Then, in place of (4.40), we have

(4.45) $$D_D(u,v)=1-\int_{-\infty}^{\infty}\int_{-\infty}^{\infty}\left[1-p'\alpha(u-x,L(5))\alpha(v-y,L(6))\frac{B(1)B(2)}{L(5)L(6)}\right]^{N(2)}$$

$$\times g\left(\frac{x}{s(3)}\right)g\left(\frac{y}{s(4)}\right)\frac{dxdy}{s(3)s(4)}$$

$$=\left\{1-\left[1-\frac{p'B(1)B(2)}{L(5)L(6)}\right]^{N(2)}\right\}f\left(\frac{u}{s(3)},\frac{L(5)}{s(3)}\right)f\left(\frac{v}{s(4)},\frac{L(6)}{s(4)}\right).$$

We note that this expression for $D_D(u,v)$ is the same as for a fragmentation weapon in (4.26) except that $4B(1)B(2)$, the area of the target, replaces the $MAE=\pi R(1)R(2)$, and the definitions of $L(5)$ and $L(6)$ in (4.42) and (4.44) are slightly different from those in (4.24). Thus, the expression for $K(X,Y)$ is similar to (4.28):

(4.46) $$K(X,Y)=\int_{-\infty}^{\infty}\int_{-\infty}^{\infty}\left\{1-\prod_{i=1}^{N(1)}\left[1-p\left\{1-\left[1-\frac{p'B(1)B(2)}{L(5)L(6)}\right]^{N(2)}\right\}\right.\right.$$

$$\left.\left.\times f\left(\frac{xt(1)+X-a_i}{s(3)},\frac{L(5)}{s(3)}\right)f\left(\frac{yt(2)+Y-b_i}{s(4)},\frac{L(6)}{s(4)}\right)\right]\right\}h\left(x,\frac{A(1)}{t(1)}\right)h\left(y,\frac{A(2)}{t(2)}\right)dxdy.$$

Equation (4.46) is the basis for $X(105)$ in the machine program. For a single dispenser, we obtain

$$(4.47)\quad K(X,Y)=r\left\{1-\left[1-\frac{p'B(1)B(2)}{L(5)L(6)}\right]^{N(2)}\right\}F\left(\frac{X}{t(3)},\frac{L(5)}{t(3)},\frac{A(1)}{t(3)}\right)F\left(\frac{Y}{t(4)},\frac{L(6)}{t(4)},\frac{A(2)}{t(4)}\right),$$

where $t(3)$ and $t(4)$ are as in (4.30) and $L(3)$ and $L(4)$ as in (4.42) and (4.44).

b. Approximation 2: Edge Effects, No Ballistic Error. A second approximation is to assume $s(3)=s(4)=0$. Then from (4.40) $D_D(u,v)$ is

$$(4.48)\qquad D_D(u,v)=1-\left[1-\frac{p'\beta(u,B(1),L(3))\beta(v,B(2),L(4))}{4L(3)L(4)}\right]^{N(2)}.$$

For a ripple of $N(1)$ dispensers, we obtain, as in (4.35),

$$(4.49)\quad K(X,Y)=\int_{-\infty}^{\infty}\int_{-\infty}^{\infty}\left\{1-\prod_{i=1}^{N(1)}\left[1-r\left\{1-\left[1-p'\right.\right.\right.\right.$$

$$\left.\left.\left.\left.\times\frac{\beta(xt(1)+X-a_i,B(1),L(3))\beta(yt(2)+Y-b_i,B(2),L(4))}{4L(3)L(4)}\right]^{N(2)}\right\}\right]\right\}$$

$$\times h\left(x,\frac{A(1)}{t(1)}\right)h\left(y,\frac{A(2)}{t(2)}\right)dxdy.$$

Equation (4.49) forms the basis for $X(106)$ in the machine program. Thus, expressions (4.46) and (4.49), i.e., $X(105)$ and $X(106)$, are solutions to the same problem using different approximations.

4.3. UNIFORM DISTRIBUTION OVER AN ELLIPSE

We consider the same problem as in the previous section except that the subweapons are assumed to be uniformly distributed over an ellipse with semimajor axis $T(1)$ and semiminor axis $T(2)$. The kill probability $D_b(u,v)$ is

$$(4.50)\qquad D_b(u,v)=\iint_{C_1}D(u-x,v-y)\frac{dxdy}{T(1)T(2)\pi},$$

where C_1 is the area inside the ellipse $[x/T(1)]^2+[y/T(2)]^2=1$. The kill probability $D_D(u,v)$ for a single dispenser against a target element at (u,v) is thus given by (4.22) and (4.21) with $D_b(u,v)$ from (4.50).

4.3.1. Fragment-sensitive Target

For a fragment-sensitive target, substituting the damage function (2.1) in (4.50), we obtain

$$D_b(u,v)=\frac{R(1)R(2)}{T(1)T(2)}\iint_{C_1} g\left(\frac{u-x}{\gamma(1)}\right)g\left(\frac{v-y}{\gamma(2)}\right)\frac{dxdy}{\gamma(1)\gamma(2)}, \tag{4.51}$$

where

$$C_1:\left[\frac{x}{T(1)}\right]^2+\left[\frac{y}{T(2)}\right]^2\le 1,$$

$$\gamma^2(1)=\frac{R^2(1)}{2D_0},$$

$$\gamma^2(2)=\frac{R^2(2)}{2D_0}.$$

In Sec. 3.3, the offset ellipse function $P(A,B;x,y)$ was defined in (3.26) by

$$P(A,B;x,y)=\iint_{C_2} g(\xi)g(\eta)d\xi d\eta, \tag{4.52}$$

where $C_2:[(\xi-x)/A]^2+[(\eta-y)/B]^2\le 1$. We can thus express $D_b(u,v)$ in (4.51) as

$$D_b(u,v)=\frac{R(1)R(2)}{T(1)T(2)}P\left(\frac{T(1)}{\gamma(1)},\frac{T(2)}{\gamma(2)};\frac{u}{\gamma(1)},\frac{v}{\gamma(2)}\right), \tag{4.53}$$

with $P(A,B;x,y)$ as in (4.52). Thus, $D_D(u,v)$, which is similar to (4.23), is

$$D_D(u,v)=\int_{-\infty}^{\infty}\int_{-\infty}^{\infty}\left\{1-\left[1-\frac{pR(1)R(2)}{T(1)T(2)}P\left(\frac{T(1)}{\gamma(1)},\frac{T(2)}{\gamma(2)};\frac{u-x}{\gamma(1)},\frac{v-y}{\gamma(2)}\right)\right]^{N(2)}\right\} \tag{4.54}$$

$$\times g\left(\frac{x}{\beta(3)}\right)g\left(\frac{y}{\beta(4)}\right)\frac{dxdy}{\beta(3)\beta(4)}.$$

a. Approximation 1: Ballistic Error, No Edge Effects. As before, we must simplify (4.54). If $T(1)/\gamma(1)$ and $T(2)/\gamma(2)$ are large, we make the following approximation in (4.53):

$$D_b(u,v)=\begin{cases}\dfrac{R(1)R(2)}{T(1)T(2)} & \text{if } \left[\dfrac{u}{T(1)}\right]^2+\left[\dfrac{v}{T(2)}\right]^2\le 1,\\ 0 & \text{otherwise.}\end{cases} \tag{4.55}$$

Again, this is the approximation often used when we ignore edge effects: The kill probability is the ratio of the MAE to the pattern area inside the pattern and zero outside. Under this approximation, we obtain from (4.22)

$$D_D(u,v)=\iint_{C_3}\left\{1-\left[1-\frac{pR(1)R(2)}{T(1)T(2)}\right]^{N(2)}\right\}g\left(\frac{x}{s(3)}\right)g\left(\frac{y}{s(4)}\right)\frac{dxdy}{s(3)s(4)}, \tag{4.56}$$

where

$$C_3:\left[\frac{x-u}{T(1)}\right]^2+\left[\frac{y-v}{T(2)}\right]^2\le 1.$$

The integral in (4.56) is also an offset ellipse function. Thus, we have

$$D_D(u,v)=\left\{1-\left[1-\frac{pR(1)R(2)}{T(1)T(2)}\right]^{N(2)}\right\}P\left(\frac{T(1)}{s(3)},\frac{T(2)}{s(4)};\frac{u}{s(3)},\frac{v}{s(4)}\right), \tag{4.57}$$

where $P(A,B;x,y)$ is defined in (4.52).

For a ripple of $N(1)$ dispensers with CI's at (a_i,b_i), the kill probability $D_p(u,v)$, which is similar to (4.27), is

$$D_p(u,v)=1-\prod_{i=1}^{N(1)}\left[1-p\left\{1-\left[1-\frac{pR(1)R(2)}{T(1)T(2)}\right]^{N(2)}\right\}P\left(\frac{T(1)}{s(3)},\frac{T(2)}{s(4)};\frac{u-a_i}{s(4)},\frac{v-b_i}{s(4)}\right)\right]. \tag{4.58}$$

Substituting the expression for $D_p(u,v)$ given in (4.58) in (2.27), we obtain

$$(4.59)\quad K(X,Y)=\int_{-\infty}^{\infty}\int_{-\infty}^{\infty}\left\{1-\prod_{i=1}^{N(1)}\left[1-r\left\{1-\left[1-\frac{pR(1)R(2)}{T(1)T(2)}\right]^{N(2)}\right\}\right.\right.$$

$$\left.\left.\times P\left(\frac{T(1)}{s(3)},\frac{T(2)}{s(4)};\frac{xt(1)+X-a_i}{s(3)},\frac{yt(2)+Y-b_i}{s(4)}\right)\right]\right\}h\left(x,\frac{A(1)}{t(1)}\right)h\left(y,\frac{A(2)}{t(2)}\right)dxdy.$$

Equation (4.59) is the basis for $X(107)$ in the machine program.

If the pattern is circular, $T(1)=T(2)=T$, and the dispenser ballistic errors are equal, $s(3)=s(4)=s$, the expression for $K(X,Y)$ in (4.59) becomes

$$(4.60)\quad K(X,Y)=\int_{-\infty}^{\infty}\int_{-\infty}^{\infty}\left\{1-\prod_{i=1}^{N(1)}\left[1-r\left\{1-\left[1-\frac{pR(1)R(2)}{T^2}\right]^{N(2)}\right\}\right.\right.$$

$$\left.\left.\times P\left(\frac{T}{s},\frac{\sqrt{[xt(1)+X-a_i]^2+[yt(2)+Y-b_i]^2}}{s}\right)\right]\right\}h\left(x,\frac{A(1)}{T(1)}\right)h\left(y,\frac{A(2)}{T(2)}\right)dxdy,$$

where $P(R,r)$ is the offset circle function discussed in Sec. 3.3 and defined in (3.28) as

$$(4.61)\qquad P(R,r)=\iint_{x^2+y^2\le R^2} g(x-r)g(y)dxdy.$$

As discussed in Ref. 1, the circular coverage function $P(R,r)$ may be approximated for R large:

$$(4.62)\qquad P(R,r)\doteq\int_{r-\sqrt{R^2-1}}^{\infty} g(u)du=1-G(r-\sqrt{R^2-1}).$$

This approximation is very close for $R\ge 5$ but should not be used for $R<3$. Using this approximation in (4.60), we obtain a second approximation:

$$(4.63)\qquad K(X,Y)=\int_{-\infty}^{\infty}\int_{-\infty}^{\infty}\left\{1-\prod_{i=1}^{N(1)}\left[1-r\left\{1-\left[1-\frac{pR(1)R(2)}{T^2}\right]^{N(2)}\right\}\right.\right.$$

$$\left.\left.\times\left\{1-G\left(\frac{\sqrt{[xt(1)+X-a_i]^2+[yt(2)+Y-b_i]^2}-\sqrt{T^2-s^2}}{s}\right)\right\}\right]\right\}$$

$$\times h\left(x,\frac{A(1)}{t(1)}\right)h\left(y,\frac{A(2)}{t(2)}\right)dxdy.$$

b. Approximation 2: Edge Effects, No Ballistic Error. A second approximation in (4.54) is to set $s(3)=s(4)=0$. Then $D_D(u,v)$ from (4.54) is

$$(4.64)\qquad D_D(u,v)=1-\left[1-\frac{pR(1)R(2)}{T(1)T(2)}P\left(\frac{T(1)}{\gamma(1)},\frac{T(2)}{\gamma(2)};\frac{u}{\gamma(1)},\frac{v}{\gamma(2)}\right)\right]^{N(2)},$$

where $\gamma(1)$ and $\gamma(2)$ are as in (4.51). For a ripple of $N(1)$ dispensers, $D_p(u,v)$ is thus

$$D_p(u,v)=\prod_{i=1}^{N(1)}\left[1-r\left\{1-\left[1-\frac{pR(1)R(2)}{T(1)T(2)}P\left(\frac{T(1)}{\gamma(1)},\frac{T(2)}{\gamma(2)};\frac{u-a_i}{\gamma(1)},\frac{v-b_i}{\gamma(2)}\right)\right]^{N(2)}\right\}\right].$$

Substituting in (2.27), we obtain

$$(4.65)\qquad K(X,Y)=\int_{-\infty}^{\infty}\int_{-\infty}^{\infty}\left\{1-\prod_{i=1}^{N(1)}\left[1-r\left\{1-\left[1-\frac{pR(1)R(2)}{T(1)T(2)}\right.\right.\right.\right.$$

$$\left.\left.\left.\left.\times P\left(\frac{T(1)}{\gamma(1)},\frac{T(2)}{\gamma(2)};\frac{xt(1)+X-a_i}{\gamma(1)},\frac{yt(2)+Y-b_i}{\gamma(2)}\right)\right]^{N(2)}\right\}\right]\right\}$$

$$\times h\left(x,\frac{A(1)}{t(1)}\right)h\left(y,\frac{A(2)}{t(2)}\right)dxdy.$$

Equation (4.65) is the basis for $X(108)$ in the machine program. Equations (4.59) and (4.65) are two approximations to the same thing by different methods.

If the pattern is circular, $T(1)=T(2)=T$ and if $R(1)=R(2)=R$, so that $\gamma(1)=\gamma(2)=\gamma$, Eq. (4.65) for $K(X,Y)$ becomes

$$(4.66)\qquad K(X,Y)=\int_{-\infty}^{\infty}\int_{-\infty}^{\infty}\left(1-\prod_{i=1}^{N(1)}\left\{1-r\left[1-\left\{1-\frac{pR^2}{T^2}\right.\right.\right.\right.$$

$$\left.\left.\left.\times P\left(\frac{T}{\gamma},\frac{\sqrt{[xt(1)+X-a_i]^2+[yt(2)+Y-b_i]^2}}{\gamma}\right)\right\}^{N(2)}\right]\right\}\right)$$

$$\times h\left(x,\frac{A(1)}{t(1)}\right)h\left(y,\frac{A(2)}{t(2)}\right)dxdy,$$

where $P(R,r)$ is the offset circle function as in (4.61). Equation (4.66) corresponds to Eq. (4.60).

Finally, if we use the approximation for $P(R,r)$ in (4.62), we obtain the second approximation, corresponding to (4.63) for $K(X,Y)$:

$$(4.67)\qquad K(X,Y)=\int_{-\infty}^{\infty}\int_{-\infty}^{\infty}\left[1-\prod_{i=1}^{N(1)}\left(1-r\left\{1-\left[1-\frac{pR^2}{T^2}\right.\right.\right.\right.$$

$$\left.\left.\left.\times\left\{1-G\left(\frac{\sqrt{[xt(1)+X-a_i]^2+[yt(2)+Y-b_i]^2}-\sqrt{T^2-\gamma^2}}{\gamma}\right)\right\}^{N(2)}\right]\right\}\right)\right]$$

$$\times h\left(x,\frac{A(1)}{t(1)}\right)h\left(y,\frac{A(2)}{t(2)}\right)dxdy.$$

4.3.2. Impact-sensitive Target

For an impact-sensitive target, substituting (2.8) in (4.50), we obtain

$$(4.68)\qquad D_b(u,v)=\frac{p_{dk}}{\pi T(1)T(2)}\iint_{C_4}\alpha(u-x,B(1))\alpha(v-y,B(2))dxdy,$$

where $C_4:[x/T(1)]^2+[y/T(2)]^2\le 1$. If $T(1)/B(1)$ and $T(2)/B(2)$ are large, we can make an approximation similar to that used in (4.55), i.e., let

$$(4.69)\qquad D_b(u,v)=\begin{cases}p_{dk}\dfrac{4B(1)B(2)}{\pi T(1)T(2)} & \text{if } \left[\dfrac{u}{T(1)}\right]^2+\left[\dfrac{v}{T(2)}\right]^2\le 1,\\ 0 & \text{otherwise.}\end{cases}$$

Thus, if (4.22) is used, $D_D(u,v)$ becomes

$$D_D(u,v)=\left\{1-\left[1-\frac{p'4B(1)B(2)}{\pi T(1)T(2)}\right]^{N(2)}\right\}P\left(\frac{T(1)}{s(3)},\frac{T(2)}{s(4)};\frac{u}{s(3)},\frac{v}{s(4)}\right).$$

This is exactly the same as $D_D(u,v)$ in (4.57) for the fragment-sensitive case, except that we have replaced $R(1)R(2)/T(1)T(2)$ by the ratio $4B(1)B(2)/\pi T(1)T(2)$ and p by p'. Thus, we obtain an expression that corresponds to (4.59):

$$(4.70)\quad K(X,Y)=\int_{-\infty}^{\infty}\int_{-\infty}^{\infty}\left\{1-\prod_{i=1}^{N(1)}\left[1-r\left\{1-\left[1-\frac{p'4B(1)B(2)}{\pi T(1)T(2)}\right]^{N(2)}\right.\right.\right.$$

$$\left.\left.\left.\times P\left(\frac{T(1)}{s(3)},\frac{T(2)}{s(4)};\frac{xt(1)+X-a_i}{s(3)},\frac{yt(2)+Y-b_i}{s(4)}\right)\right\}\right]\right\}h\left(x,\frac{A(1)}{t(1)}\right)h\left(y,\frac{A(2)}{t(2)}\right)dxdy.$$

Equation (4.70) forms the basis for $X(109)$ in the machine program. For the circular case, Eq. (4.60) applies with the above replacement, i.e.,

$$(4.71)\quad K(X,Y)=\int_{-\infty}^{\infty}\int_{-\infty}^{\infty}\left\{1-\prod_{i=1}^{N(1)}\left[1-r\left\{1-\left[1-\frac{p'4B(1)B(2)}{\pi T^2}\right]^{N(2)}\right.\right.\right.$$

$$\left.\left.\left.\times P\left(\frac{T}{s},\frac{\sqrt{[xt(1)+X-a_i]^2+[yt(2)+Y-b_i]^2}}{s}\right)\right\}\right]\right\}h\left(x,\frac{A(1)}{t(1)}\right)h\left(y,\frac{A(2)}{t(2)}\right)dxdy.$$

Finally, for T/s sufficiently large, we obtain an expression similar to (4.63):

$$(4.72)\qquad K(X,Y)\approx\int_{-\infty}^{\infty}\int_{-\infty}^{\infty}\left(1-\prod_{i=1}^{N(1)}\left\{1-r\left[1-\left[1-\frac{p'4B(1)B(2)}{\pi T(1)T(2)}\right]^{N(2)}\right.\right.\right.$$

$$\left.\left.\left.\times\left\{1-G\left(\frac{\sqrt{[xt(1)+X-a_i]^2+[yt(2)+Y-b_i]^2}-\sqrt{T^2-s^2}}{s}\right)\right\}\right]\right\}\right)$$

$$\times h\left(x,\frac{A(1)}{t(1)}\right)h\left(y,\frac{A(2)}{t(2)}\right)dxdy.$$

We note that the approximation ignores the edge effects. If the edge effects are important, i.e., $T(1)/B(1)$ and $T(2)/B(2)$ small, we may transform the elliptical pattern into an equal area rectangular pattern and use the results of Sec. 4.2.2. In this case, we would let

$$L(3)=\frac{\sqrt{\pi}T(1)}{2},$$

(4.73)

$$L(4)=\frac{\sqrt{\pi}T(2)}{2},$$

and use Eq. (4.49).

4.4. UNIFORM DISTRIBUTION OVER AN ELLIPTIC ANNULUS

We consider the same problem as that of Sec. 4.3, "Uniform Distribution over an Ellipse," except that the subweapons are assumed to be uniformly distributed over an elliptic annulus, the area included between the inner ellipse with semiaxes $W(1)$ and $W(2)$ and the outer ellipse of semiaxes $T(1)$ and $T(2)$. The kill probability $D_b(u,v)$ is now

$$D_b(u,v)=\iint_{C_5}\frac{D(u-x,v-y)\,dx\,dy}{\pi[T(1)T(2)-W(1)W(2)]}, \tag{4.74}$$

where C_5 is the area between the ellipses $[x/T(1)]^2+[y/T(2)]^2=1$ and $[x/W^2(1)]+[y/W^2(2)]=1$. The kill probability $D_D(u,v)$ for a single dispenser against a target element at (u,v) is thus given by (4.22) and (4.21) with $D_b(u,v)$ now given by (4.74).

4.4.1. Fragment-sensitive Target

For a fragment-sensitive target, substituting the damage function (2.1) in (4.74), we obtain for $D_b(u,v)$ an expression similar to that of Eq. (4.53):

$$D_b(u,v)=\frac{R(1)R(2)}{T(1)T(2)-W(1)W(2)}\left[P\left(\frac{T(1)}{\gamma(1)},\frac{T(2)}{\gamma(2)};\frac{u}{\gamma(1)},\frac{v}{\gamma(2)}\right)-P\left(\frac{W(1)}{\gamma(1)},\frac{W(2)}{\gamma(2)};\frac{u}{\gamma(1)},\frac{v}{\gamma(2)}\right)\right],$$

where $P(A,B;u,v)$ is the offset ellipse function in (3.26) and $\gamma(1)$ and $\gamma(2)$ are as in (4.51), i.e.,

$$\gamma^2(1)=\frac{R^2(1)}{2D_0},$$

$$\gamma^2(2)=\frac{R^2(2)}{2D_0}.$$

Thus, as with Eq. (4.54), $D_D(u,v)$ is now

$$(4.75)\qquad D_D(u,v)=\int_{-\infty}^{\infty}\int_{-\infty}^{\infty}\left[1-\left\{1-\frac{pR(1)R(2)}{T(1)T(2)-W(1)W(2)}\left[P\left(\frac{T(1)}{\gamma(1)},\frac{T(2)}{\gamma(2)};\frac{u}{\gamma(1)},\frac{v}{\gamma(2)}\right)\right.\right.\right.$$

$$\left.\left.\left.-P\left(\frac{W(1)}{\gamma(1)},\frac{W(2)}{\gamma(2)};\frac{u}{\gamma(1)},\frac{v}{\gamma(2)}\right)\right]\right\}^{N(2)}\right]g\left(\frac{x}{s(3)}\right)g\left(\frac{y}{s(4)}\right)\frac{dxdy}{s(3)s(4)}.$$

<u>a. Approximation i: Ballistic Error, No Edge Effects</u>. If $T(1)/\gamma(1)$, $T(2)/\gamma(2)$, $W(1)/\gamma(1)$, $W(2)/\gamma(2)$ are large, we make the same approximation, as in (4.55), that

$$(4.76)\qquad D_b(u,v)=\frac{R(1)R(2)}{T(1)T(2)-W(1)W(2)}$$

if (u,v) is inside the elliptic annulus C_5 and otherwise zero. Under this approximation, $D_D(u,v)$ becomes

$$(4.77)\qquad D_D(u,v)=\iint_{C_5}\left\{1-\left[1-\frac{pR(1)R(2)}{T(1)T(2)-W(1)W(2)}\right]^{N(2)}\right\}g\left(\frac{x}{s(3)}\right)g\left(\frac{y}{s(4)}\right)\frac{dxdy}{s(3)s(4)}.$$

The integral in (4.77) is the difference of two offset ellipse functions; thus

$$(4.78)\qquad D_D(u,v)=\left\{1-\left[1-\frac{pR(1)R(2)}{T(1)T(2)-W(1)W(2)}\right]^{N(2)}\right.$$

$$\left.\times\left[P\left(\frac{T(1)}{s(3)},\frac{T(2)}{s(4)};\frac{u}{s(3)},\frac{v}{s(4)}\right)-P\left(\frac{W(1)}{s(3)},\frac{W(2)}{s(4)};\frac{u}{s(3)},\frac{v}{s(4)}\right)\right]\right\}.$$

In this equation, $F(A,R;u,v)$ is the offset ellipse function given in Eq. (3.26).

If we proceed as in (4.59), for a ripple of $N(1)$ dispensers with CI's at (a_i, b_i) and a dispenser reliability factor p, the fractional coverage $K(X,Y)$ is

$$(4.79)\quad K(X,Y)=\int_{-\infty}^{\infty}\int_{-\infty}^{\infty}\left\{1-\prod_{i=1}^{N(1)}\left[1-p\left\{1-\left[1-\frac{\Sigma F(1)h(2)}{T(1)T(2)-W(1)W(2)}\right]^{N(2)}\right\}\right.\right.$$

$$\times\left[F\left(\frac{T(1)}{s(3)},\frac{T(2)}{s(4)};\frac{xt(1)+X-a_i}{s(3)},\frac{yt(2)+Y-b_i}{s(4)}\right)-F\left(\frac{W(1)}{s(3)},\frac{W(2)}{s(4)};\frac{xt(1)+X-a_i}{s(3)},\frac{yt(2)+Y-b_i}{s(4)}\right)\right]\Bigg\}$$

$$\times h\left(x,\frac{A(1)}{t(1)}\right)h\left(y,\frac{A(2)}{t(2)}\right)dx\,dy\,.$$

Equation (4.79) is the basis for $X(110)$ in the machine program. It allows a ballistic error but considers no edge effects. Thus, to be valid, the ratios $T(1)/R(1)$ and $T(2)/R(2)$ should be reasonably large, i.e., >5.

If the pattern is a circular annulus, $T(1)=T(2)=T$ and $W(1)=W(2)=W$, and the ballistic errors are equal, $s(3)=s(4)=s$, the expression $K(X,Y)$, which is similar to (4.60), becomes

$$(4.80)\quad K(X,Y)=\int_{-\infty}^{\infty}\int_{-\infty}^{\infty}\left\{1-\prod_{i=1}^{N(1)}\left[1-p\left\{1-\left[1-\frac{\Sigma F(1)h(2)}{T-W}\right]^{N(2)}\right\}\right.\right.$$

$$\times\left\{F\left(\frac{T}{s},\frac{\sqrt{[xt(1)+X-a_i]^2+[yt(2)+Y-b_i]^2}}{s}\right)\right.$$

$$\left.\left.-F\left(\frac{W}{s},\frac{\sqrt{[xt(1)+X-a_i]^2+[yt(2)+Y-b_i]^2}}{s}\right)\right\}\right]\Bigg\}h\left(x,\frac{A(1)}{t(1)}\right)h\left(y,\frac{A(2)}{t(2)}\right)dx\,dy\,,$$

where $F(R,r)$ is the offset circle function as in (4.61).

As a second approximation for T/s and W/s large, using the approximation for $F(R,r)$ in (4.62), we obtain an expression that is similar to (4.63):

$$(4.81)\qquad K(X,Y)=\int_{-\infty}^{\infty}\int_{-\infty}^{\infty}\left\{1-\prod_{i=1}^{N(1)}\left[1-r\left\{1-\left[1-\frac{pR(1)R(2)}{T^2-W^2}\right]^{N(2)}\right\}\right.\right.$$

$$\times\left\{G\left(\frac{\sqrt{[xt(1)+X-a_i]^2+[yt(2)+Y-b_i]^2}-\sqrt{W^2-s^2}}{s}\right)\right.$$

$$\left.\left.\left.-G\left(\frac{\sqrt{[xt(1)+X-a_i]^2+[yt(2)+Y-b_i]^2}-\sqrt{T^2-s^2}}{s}\right)\right\}\right]\right\}$$

$$\times h\left(x,\frac{A(1)}{t(1)}\right)h\left(y,\frac{A(2)}{t(2)}\right)dxdy.$$

Equation (4.81) is the basis for $X(100)$ in the machine program. Again, no edge effects are considered and min $[T/R(1),T/R(2)]$ should be greater than 5. Further, in order that approximation (4.62) be valid, T/s and W/s should be greater than 3.

b. Approximation 2: Edge Effects, No Ballistic Error. The second approximation is to set $s(3)=s(4)=0$. Then, proceeding as in Sec. 4.3.1a for Eqs. (4.64) and (4.65), we obtain for $K(X,Y)$ an equation that corresponds to (4.65):

$$(4.82)\quad K(X,Y)=\int_{-\infty}^{\infty}\int_{-\infty}^{\infty}\left(1-\prod_{i=1}^{N(1)}\left\{1-r\left[1-\left\{1-\frac{pR(1)R(2)}{T(1)T(2)-W(1)W(2)}\right.\right.\right.\right.$$

$$\times\left[P\left(\frac{T(1)}{\gamma(1)},\frac{T(2)}{\gamma(2)};\frac{xt(1)+X-a_i}{\gamma(1)},\frac{yt(2)+Y-b_i}{\gamma(2)}\right)\right.$$

$$\left.\left.\left.\left.-P\left(\frac{W(1)}{\gamma(1)},\frac{W(2)}{\gamma(2)};\frac{xt(1)+X-a_i}{\gamma(1)},\frac{yt(2)+Y-b_i}{\gamma(2)}\right)\right]\right\}^{N(2)}\right]\right\}\right)h\left(x,\frac{A(1)}{t(1)}\right)h\left(y,\frac{A(2)}{t(2)}\right)dxdy,$$

where $\gamma(1)$ and $\gamma(2)$ are defined in Eq. (4.51). Equation (4.82) forms the basis for $X(111)$ in the machine program. Equation (4.82) is used when the edge effects are important, while Eq. (4.79) is used when the ballistic errors are important.

If the pattern is a circular annulus $T(1)=T(2)=T$ and $W(1)=W(2)=W$, we obtain an expression that corresponds to (4.66):

$$(4.83)\quad K(X,Y)=\int_{-\infty}^{\infty}\int_{-\infty}^{\infty}\left[1-\prod_{i=1}^{N(1)}\left(1-r\left\{1-\left[1-\frac{pR^2}{T^2-W^2}\right.\right.\right.\right.$$

$$\times\left\{P\left(\frac{T}{\gamma},\frac{\sqrt{[xt(1)+X-a_i]^2+[yt(2)+Y-b_i]^2}}{\gamma}\right)\right.$$

$$\left.\left.\left.\left.-P\left(\frac{W}{\gamma},\frac{\sqrt{[xt(1)+X-a_i]^2+[yt(2)+Y-b_i]^2}}{\gamma}\right)\right\}\right]^{N(2)}\right\}\right)\right]h\left(x,\frac{A(1)}{t(1)}\right)h\left(y,\frac{A(2)}{t(2)}\right)dxdy.$$

Finally, a second approximation for T/γ and W/γ large that is similar to (4.67) is

$$(4.84)\qquad K(X,Y)=\int_{-\infty}^{\infty}\int_{-\infty}^{\infty}\left[1-\prod_{i=1}^{N(1)}\left(1-r\left\{1-\left[1-\frac{pR^2}{T^2-W^2}\right.\right.\right.\right.$$

$$\times\left\{G\left(\frac{\sqrt{[xt(1)+X-a_i]^2+[yt(2)+Y-b_i]^2}-\sqrt{W^2-\gamma^2}}{\gamma}\right)\right.$$

$$\left.\left.\left.\left.-G\left(\frac{\sqrt{[xt(1)+X-a_i]^2+[yt(2)+Y-b_i]^2}-\sqrt{T^2-\gamma^2}}{\gamma}\right)\right\}\right]^{N(2)}\right\}\right)\right]$$

$$\times h\left(x,\frac{A(1)}{t(1)}\right)h\left(y,\frac{A(2)}{t(2)}\right)dxdy.$$

Equation (4.84) forms the basis for $X(101)$ in the machine program. In this case, T/R and W/R should be larger than 5.

4.4.2. Impact-sensitive Target

For an impact-sensitive target, $D_D(u,v)$ is the same as in (4.68) for the ellipse, except that the elliptic area C_4 is replaced by the elliptic annulus C_5 of (4.74). If $T(1)/B(1)$, $T(2)/B(2)$, $W(1)/B(1)$, and $W(2)/B(2)$ are sufficiently large, we make the same approximation as in (4.69) over C_5, i.e.,

$$D_b(u,v)=\begin{cases}\dfrac{p_{dk}4B(1)B(2)}{\pi[T(1)T(2)-W(1)W(2)]} & \text{if } (u,v) \text{ is inside } C_5,\\[2ex] 0 & \text{otherwise.}\end{cases}$$

Under this approximation, $K(X,Y)$, which is similar to (4.70), is

$$(4.85)\quad K(X,Y)=\int_{-\infty}^{\infty}\int_{-\infty}^{\infty}\left(1-\prod_{i=1}^{N(1)}\left\{1-r\left[1-\left\{1-\frac{p'4B(1)B(2)}{\pi[T(1)T(2)-W(1)W(2)]}\right\}^{N(2)}\right]\right.\right.$$

$$\times\left[P\left(\frac{T(1)}{s(3)},\frac{T(2)}{s(4)},\frac{xt(1)+X-a_i}{s(3)},\frac{yt(2)+Y-b_i}{s(4)}\right)\right.$$

$$\left.\left.\left.-P\left(\frac{W(1)}{s(3)},\frac{W(2)}{s(4)},\frac{xt(1)+X-a_i}{s(3)},\frac{yt(2)+Y-b_i}{s(4)}\right)\right]\right\}\right)h\left(x,\frac{A(1)}{t(1)}\right)h\left(y,\frac{A(2)}{t(2)}\right)dxdy.$$

We note that (4.85) is identical with (4.79) for the fragment-sensitive target except that the ratio $R(1)R(2)/[T(1)T(2)-W(1)W(2)]$ is replaced by $4B(1)B(2)/\pi[T(1)T(2)-W(1)W(2)]$. Equation (4.85) is the basis for $X(112)$ in the machine program.

For the circular case, $T(1)=T(2)=T$ and $W(1)=W(2)=W$, and the ballistic errors $s(3)=s(4)=s$, the expression $K(X,Y)$, which corresponds to (4.81), becomes

$$(4.86)\quad K(X,Y)=\int_{-\infty}^{\infty}\int_{-\infty}^{\infty}\left\{1-\prod_{i=1}^{N(1)}\left[1-r\left\{1-\left[1-\frac{p'4B(1)B(2)}{\pi(T^2-W^2)}\right]^{N(2)}\right\}\right.\right.$$

$$\times\left\{G\left(\frac{\sqrt{[xt(1)+X-a_i]^2+[yt(2)+Y-b_i]^2}-\sqrt{W^2-s^2}}{s}\right)\right.$$

$$\left.\left.\left.-G\left(\frac{\sqrt{[xt(1)+X-a_i]^2+[yt(2)+Y-b_i]^2}-\sqrt{T^2-s^2}}{s}\right)\right\}\right]\right\}h\left(x,\frac{A(1)}{t(1)}\right)h\left(y,\frac{A(2)}{t(2)}\right)dxdy.$$

Again, we note that (4.81) and (4.86) are identical except for the factors

$$\frac{4B(1)B(2)}{\pi(T^2-W^2)}\quad\text{and}\quad\frac{R(1)R(2)}{T^2-W^2}.$$

Equation (4.86) forms the basis for $X(102)$ in the machine program. Since no edge effects are considered, $T/B(1)$ and $T/B(2)$ should be greater than 5; further, in order that approximation (4.62) be valid, T/s and W/s should be greater than 3. If a case occurs in which edge effects are important, i.e., $T/B(1)$ or $T/B(2)$, some other method should be used, e.g., $X(109)$.

5. THE COMPUTER PROGRAM

The simplified weapons evaluation model described here is sufficiently broad to cover almost all problems that arise in the field of nonnuclear weapons evaluation. The FORTRAN program is designed to compute the solutions to most of the effectiveness problems discussed in Secs. 3 and 4. After describing the inputs and computational methods that are generally used for all problem types, we consider each problem type that involves different inputs or different methods.

This section has been planned to permit the user to run the program without referring to previous sections. In the event that further investigation is desired, however, the appropriate references are given for each case discussed.

5.1. GENERAL CONSIDERATIONS

The following list provides the inputs required for the program, with references to the sections in which these inputs, their uses and restrictions, are described. Odd integers in the inputs denote a parameter in the x (range) direction; even integers denote a parameter in the y (deflection) direction.

FORTRAN Inputs	Description	Reference
A3,A4	Target area dimensions	5.1.1
B3,B4	Impact-type target dimensions	5.1.5
R1,R2	Fragment-type target parameters	5.1.5
D1,D2	Fragment-type target parameters	5.1.5
CL1,Q0	Dispenser range ballistic parameters	5.3
GCL3,GCL4	Rectangular pattern half dimensions	5.4
ET1,ET2	Elliptic pattern semiaxes	5.4
W1,W2	Elliptic annulus inner semiaxes	5.4
U1,U2	Number of integration steps	5.1.4
SU1,SU2	Target offsets	5.1.1
S1,S2	Ballistic error standard deviations	5.2
S3,S4	Ballistic error standard deviations for dispenser	5.4
T1,T2	Aiming error standard deviations	5.1.2
A(J),B(J)	Individual weapon aiming point	5.1.3
NXAJ,NXBJ	Flags for aiming point pattern	5.1.3
D,DF	Spacing between successive weapons	5.4
N,NB	Number of weapons, number of subweapons	5.4
SP	Probability of kill if hit, weapon reliability	5.1.5
R	Dispenser reliability	5.4

5.1.1. Target Area: Inputs $A3$, $A4$, $SU1$, $SU2$

The target area in all cases considered is a rectangle with dimensions $A3$ in the x (range) direction and $A4$ in the y (deflection) direction. The inputs $A3$ and/or $A4$ may be zero. The center of the target area may be offset from the aim point at $SU1$, $SU2$, where $SU1$ is the range offset and $SU2$ is the deflection offset.

5.1.2. Aiming Error: Inputs $T1$, $T2$

The aiming error distribution is assumed gaussian (see Sec. 3.2.1) with standard deviations $T1$ and $T2$ in x and y, respectively. In terms of REP and DEP, AREP=.6744$T1$, ADEP=.6744$T2$. If $T1=T2=T$, then CEP=1.1774T.

5.1.3. Aiming Point Array: Inputs $A(J)$, $B(J)$, D, DF, N

The aiming pattern is the array of the N desired center of impacts $[A(J),B(J)]$, $J=1,2,\ldots,N$. (See Sec. 3.1.) The points are so defined that $\Sigma A(J)=0, \Sigma B(J)=0$. The pattern may be a direct input or may be calculated. If the flag $NXAJ=0$, a direct input for the $A(J)$'s is called for and D must be 1; if the flag $NXBJ=0$, the $B(J)$'s are called for and DF must be 1. If $NXAJ=1$, the $A(J)$'s are calculated, using the uniform spacing D; if $NXBJ=1$, the $B(J)$'s are calculated, using the spacing DF.

5.1.4. Integration Routine: Inputs $U1$, $U2$

The basic integration problem (see Sec. 2.3) is the evaluation of the double integral

$$I=\int_{-\infty}^{\infty}\int_{-\infty}^{\infty} K(x,y)h\left(x,\frac{A(1)}{T(1)}\right)h\left(y,\frac{A(2)}{T(2)}\right)dxdy, \tag{5.1}$$

where $K(x,y)$ is a nonnegative integrable function never larger than 1; $A(1)$ and $A(2)$ are the target half dimensions; and $h(x,A)$ is the function defined in Eq. (2.19) as

$$h(x,A)=\frac{1}{2A}\int_{-A}^{A} g(x+z)dz, \tag{5.2}$$

where $g(x)=\exp(-x^2/2)/\sqrt{2\pi}$.

We note the limits

$$\lim_{T\to 0} \frac{h(x/T, A/T)}{T} = \frac{\alpha(x,A)}{2A} = \begin{cases} \frac{1}{2A} & \text{if } |x| \le A, \\ 0 & \text{if } |x| > A, \end{cases}$$

(5.3)

$$\lim_{A\to 0} h(x,A) = g(x).$$

In order to use a numerical integration routine, we must truncate the integrals in (5.1) through an appropriate choice of the truncation limits $E(1)$ and $E(2)$, obtaining the expression

$$I = \int_{-E(1)}^{E(1)} \int_{-E(2)}^{E(2)} K(x,y) h\left(x, \frac{A(1)}{T(1)}\right) h\left(y, \frac{A(2)}{T(2)}\right) dx dy + \varepsilon_1, \tag{5.4}$$

where ε_1 is the truncation error. To obtain $E(1)$ and $E(2)$ we consider in turn two possible choices for truncation limits. The first set, $E(3)$ and $E(4)$, are based on the fact that $K(x,y) \le 1$. For truncation limits $E(3)$ and $E(4)$, the corresponding truncation error ε_2 is

$$\begin{aligned} \varepsilon_2 &\le 4 \int_{E(3)}^{\infty} h\left(x, \frac{A(1)}{T(1)}\right) dx \int_{E(4)}^{\infty} h\left(y, \frac{A(2)}{T(2)}\right) dy \\ &\le 4 \left[1 - H\left(E(3), \frac{A(1)}{T(1)}\right)\right] \left[1 - H\left(E(4), \frac{A(2)}{T(2)}\right)\right], \end{aligned} \tag{5.5}$$

where $H(x,A)$ is defined as

$$H(x,A) = \int_{-\infty}^{x} h(y,A) dy. \tag{5.6}$$

and is evaluated by Eq. (2.20). We determine $E(3)$ and $E(4)$ satisfying the inequalities

$$1-H\left(E(3),\frac{A(1)}{T(1)}\right)\leq 10^{-4},$$

$$1-H\left(E(4),\frac{A(2)}{T(2)}\right)\leq 10^{-4}.$$

Thus the truncation error ε_2 is

$$\varepsilon \leq 4(10)^{-8}. \tag{5.7}$$

The second set $E(5)$ and $E(6)$ is based on the fact that

$$\int_{-\infty}^{\infty} h(x,A)dx=1.$$

Thus for truncation limits $E(5)$ and $E(6)$, the truncation error ε_3 is

$$\varepsilon_3\leq 2\left[\max_{|x|>E(5)} K(x,y)+\max_{|y|>E(6)} K(x,y)\right]. \tag{5.8}$$

We determine $E(5)$ and $E(6)$ for each function $K(x,y)$ satisfying the inequalities

$$\begin{aligned} &\max_{|x|>E(5)} K(x,y)\leq 10^{-4}, \\ &\max_{|y|>E(6)} K(x,y)\leq 10^{-4}, \end{aligned} \tag{5.9}$$

so that the truncation error ε_3 is

$$\varepsilon_3\leq 4(10)^{-4}.$$

The truncation limits $E(1)$ and $E(2)$ are chosen as

$$\begin{aligned} E(1)&=\min(E(3),E(5)), \\ E(2)&=\min(E(4),E(6)). \end{aligned} \tag{5.10}$$

The truncation error ε_1 is thus

$$\varepsilon_1 \le \max(\varepsilon_2, \varepsilon_3).$$

In the numerical integration routine, we choose the number of integration steps $2U(1)$ in the x direction and $2U(2)$ in the y direction. The respective step sizes $e(1)$ and $e(2)$ are thus

$$e(1) = \frac{E(1)}{U(1)}, \qquad e(2) = \frac{E(2)}{U(2)}, \tag{5.11}$$

where $E(1)$ and $E(2)$ are given in (5.10). We designate the centers of the integration rectangles by $[x(j), y(j)]$ and let

$$x(j) = \begin{cases} (2\cdot j-1)\dfrac{e(1)}{2} & \text{if } j \le U(1), \\[2ex] [2\cdot j-1-2U(1)]\dfrac{e(1)}{2} & \text{if } j > U(1), \end{cases}$$

$$y(j) = \begin{cases} (2\cdot j-1)\dfrac{e(2)}{2} & \text{if } j \le U(2), \\[2ex] [2\cdot j-1-2U(2)]\dfrac{e(2)}{2} & \text{if } j > U(2). \end{cases} \tag{5.12}$$

The integral I in (5.4) is thus given approximately by

$$I \doteq \sum_{j=1}^{2U(1)} \sum_{k=1}^{2U(2)} \int_{x(j)-e(1)/2}^{x(j)+e(1)/2} \int_{y(k)-e(2)/2}^{y(k)+e(2)/2} K(\xi,\eta)\, h\left(\xi, \frac{A(1)}{T(1)}\right) h\left(\eta, \frac{A(2)}{T(2)}\right) d\xi\, d\eta. \tag{5.13}$$

Replacing $K(\xi,\eta)$ by its value at the midpoint of the integration rectangle, we find that

$$I = \sum_{j=1}^{2U(1)} \sum_{k=1}^{2U(2)} K(x(j), y(k)) \int_{x(j)-e(1)/2}^{x(j)+e(1)/2} h\left(\xi, \frac{A(1)}{T(1)}\right) d\xi \tag{5.14}$$

$$\times \int_{y(k)-e(2)/2}^{y(k)+e(2)/2} h\left(\eta, \frac{A(2)}{T(2)}\right) d\eta.$$

When we use the expression (5.6) for $H(x,L)$, we obtain for I

$$(5.15)\qquad I=\sum_{j=1}^{2U(1)}\sum_{k=1}^{2U(2)}K(x(j),y(k))\left[H\left(x(j)+\frac{e(1)}{2},\frac{A(1)}{T(1)}\right)-H\left(x(j)-\frac{e(1)}{2},\frac{A(1)}{T(1)}\right)\right]$$

$$\times\left[H\left(y(k)+\frac{e(2)}{2},\frac{A(2)}{T(2)}\right)-H\left(y(k)-\frac{e(2)}{2},\frac{A(2)}{T(2)}\right)\right].$$

We define the function $F(x,y,L)$ as

$$(5.16)\qquad F(x,y,L)=H(x+y,L)-H(x-y,L).$$

Then, I from Eq. (5.15) is

$$(5.17)\qquad I=\sum_{j=1}^{2U(1)}\sum_{k=1}^{2U(2)}K(x(j),y(k))F\left(x(j),\frac{e(1)}{2},\frac{A(1)}{T(1)}\right)F\left(y(k),\frac{e(2)}{2},\frac{A(2)}{T(2)}\right).$$

In terms of the FORTRAN symbols, the integral I is

$$(5.18)\qquad I=\sum_{j=1}^{2U1}\sum_{k=1}^{2U2}K6(x(j),y(k))FF\left(x(j),\frac{SE1}{2},\frac{A1}{T1}\right)FF\left(y(k),\frac{SE2}{2},\frac{A2}{T2}\right).$$

If $K(x,y)$ is symmetric in either x or y, the sum in (5.17) need only be taken to $U(1)$ or $U(2)$. If symmetric in both x and y, we obtain

$$(5.19)\qquad I=4\sum_{j=1}^{U(1)}\sum_{k=1}^{U(2)}K(x(j),y(k))F\left(x(j),\frac{e(1)}{2},\frac{A(1)}{T(1)}\right)F\left(y(k),\frac{e(2)}{2},\frac{A(2)}{T(2)}\right).$$

Equations (5.17) and (5.19) are the basis for the integration routine, subroutine A50. For one dimension, the expressions are single sums and are the basis for the single integration routines.

5.1.5. Damage Functions: Inputs SP, $B3$, $B4$, $R1$, $R2$, $D1$, $D2$

Two types of damage functions are used (see Sec. 2.1). We define an *impact-sensitive target* as one for which there is a definite geometric figure (in our case a rectangle of dimensions $B3$, $B4$), which must be impacted by the weapon or subweapon. A target for which a vulnerable area is given thus belongs in this category. The input parameter SP is the probability of damage if hit. When we define $B1 = B3/2, B2 = B4/2$, D is given by

$$D(x,y) = \begin{cases} SP & \text{if } -B1 \le x \le B1, -B2 \le y \le B2, \\ 0 & \text{otherwise.} \end{cases} \tag{5.20}$$

We note that $B3$ and $B4$ are the dimensions in the ground plane.

We define a *fragment-sensitive target* as one for which a significant portion of the damage effect is due to the fragmentation of the weapon. Usually, the damage function is determined as a damage matrix using a "lethal area" program. This damage function is approximated by an exponential function (see Sec. 2.1) of the form

$$D(x,y) = SP \cdot \sqrt{D1 \cdot D2}\, \exp\left(-\frac{D1x^2}{R1^2} + \frac{D2y^2}{R2^2}\right). \tag{5.21}$$

The parameters $D1$, $D2$, $R1$, and $R2$ are inputs to be obtained from empirical data. First, we require that $\pi R1 \cdot R2 = \text{MAE}$, where the MAE has been determined by some other method. The ratio of $R1$ to $R2$, or the ellipticity of the damage function, may be calculated or estimated. The initial values $D1$ and $D2$ will usually be set equal to one. In this case the input parameter SP is the reliability factor for the individual weapon.

5.2. RIPPLE OF BOMBS: INPUTS $S1$, $S2$, N

We consider a ripple of N weapons delivered with a common aiming error according to an aiming point pattern. Each weapon is subject individually to a ballistic error according to a gaussian distribution with standard deviations

$S1$ and $S2$. The inputs $S1$ and $S2$ may be zero. Again, in terms of REP and DEP, BREP=.6744$S1$, BDEP=.6744$S2$.

Figure 1 presents a flow diagram of the computer program for the ripple of bombs. The fractional coverages $X(1)$, $X(11)$, $X(5)$, and $X(15)$ are answers to the problems considered in Sec. 3. The program is described as follows:

- The fractional coverage for a ripple of bombs against a *fragment-sensitive target* is $X(11)$. Pertinent inputs are $D1$, $D2$, $R1$, $R2$, $S1$, and $S2$, which are obtained from empirical data. The program uses Eq. (3.7).

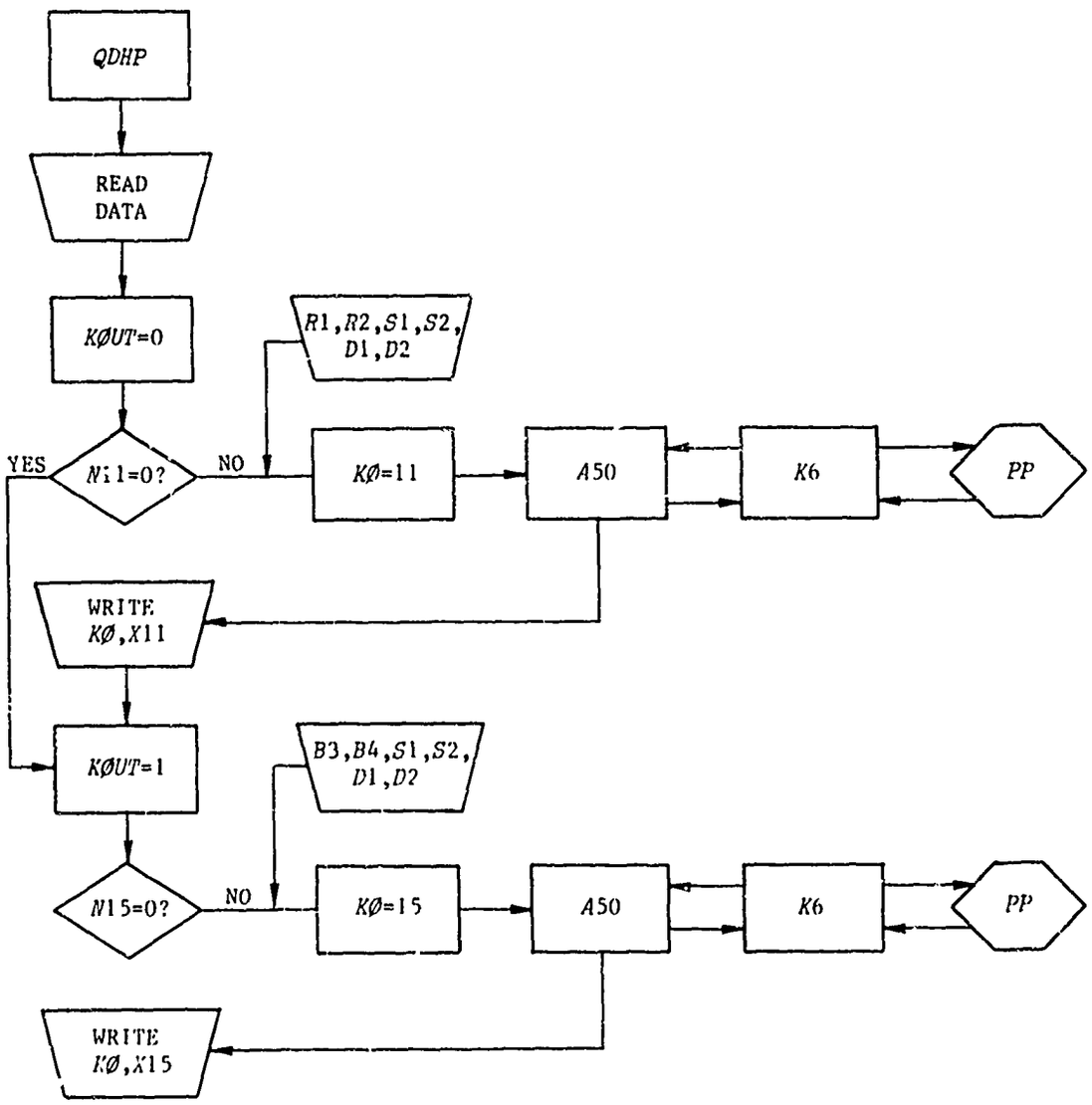

Fig. 1--Ripple of Bombs Delivered with a Common Aiming Error

- The fractional coverage against an *impact-sensitive target* is $X(15)$. This problem uses $B3$ and $B4$ in the computations rather than $R1$, $R2$, $D1$, and $D2$. The program uses Eq. (3.20).
- The fractional coverages $X(1)$ and $X(11)$ are answers to the same problem when different but equivalent expressions are used; $X(5)$ and $X(15)$ are also equivalent. However, $X(1)$ and $X(5)$ are restricted to cases in which the number of weapons, N, is less than or equal to 12. The computation for N very small is faster and more accurate for $X(1)$ and $X(5)$ than it is for $X(11)$ and $X(15)$.
- The flag NO is used to skip parts of the program to compute $X(1)$ or $X(5)$. The code is restricted to the computation of $X(1)$, $X(2)$, $X(3)$, $X(4)$, or $X(5)$ when NO=0; when NO=1, $X(1)$ through $X(5)$ are omitted; there are no restrictions when NO=2. The subroutine *XRØ* computes $X(1)$ through $X(5)$. Equation (3.13) is used to compute $X(1)$ and Eq. (3.21) to compute $X(5)$.
- The basic flow of the computer model is the same for $X(11)$ and $X(15)$. In subroutine *PP*, the $P(x,j)$ function has been redefined for $X(15)$. The flag *KØUT*, which is automatically set and is not a data input, determines which $P(x,j)$ function to use.

5.3. RIPPLE OF FIXED DISPENSERS: INPUTS *NB*, *S2*, TABLE, OR *CL1*, *Q0*

We consider a ripple of N fixed dispensers actuated with a common aiming error according to an aiming point pattern. From each dispenser, NB subweapons are released. In range, the ballistic dispersion for the subweapons within each dispenser is given by an empirical table. In deflection, each subweapon is assumed subject to a gaussian ballistic error with standard deviation $S2$. The range pattern is fitted by an approximating function, the stick distribution $H(x/Q0,CL1/Q0)$, discussed in Sec. 2.2.2c and App. B, through the use of the two parameters $CL1$ and $Q0$.

Figure 2 presents a flow diagram of the computer program for a ripple of fixed dispensers The fractional coverages $X(2)$, $X(12)$, $X(3)$, $X(13)$, $X(4)$, and $X(14)$ are answers to the problems in Sec. 4.1.

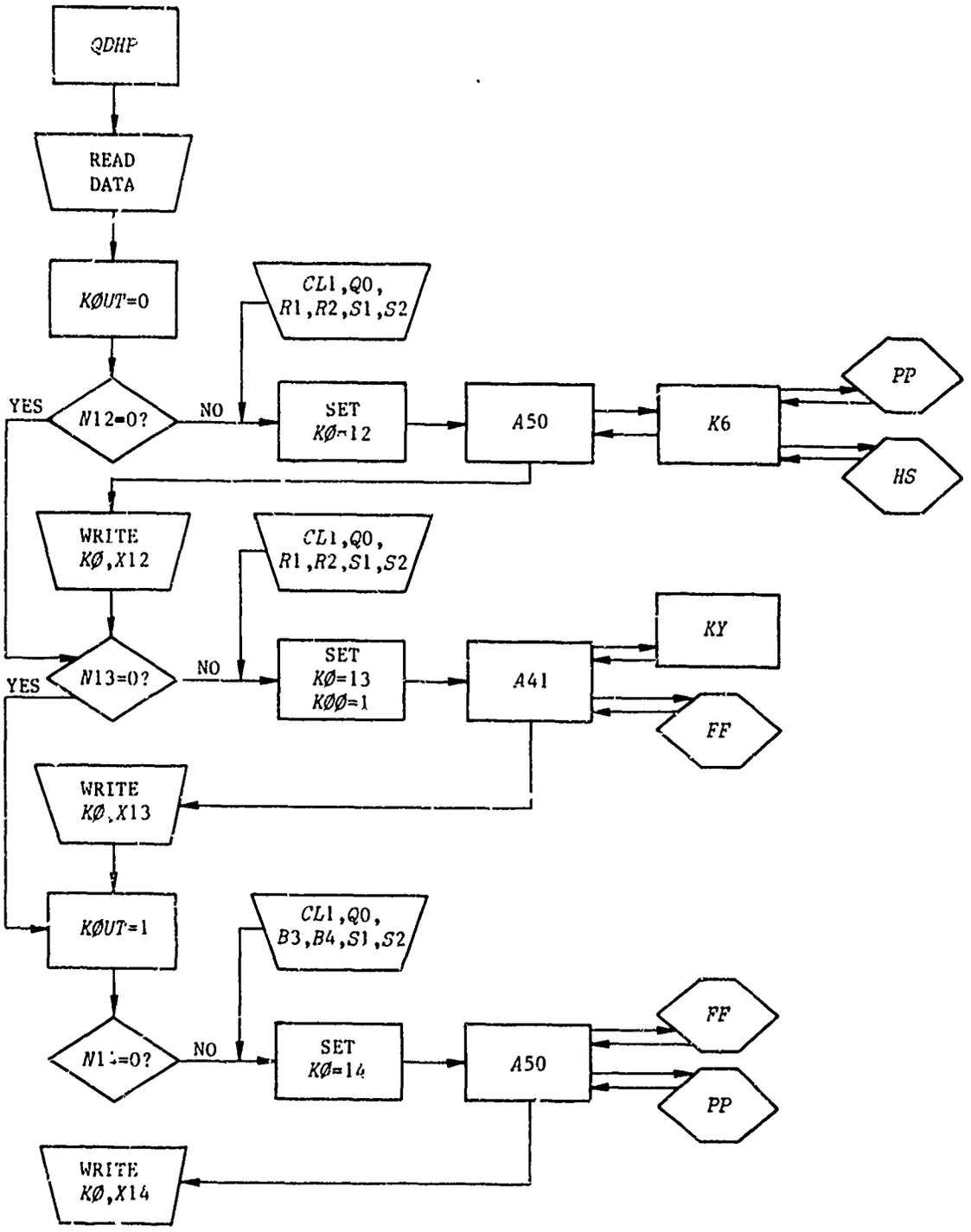

Fig. 2--Ripple of Fixed Dispensers

The program is described as follows:

- The fractional coverage for a ripple of fixed dispensers against a *fragment-sensitive target* is $X(12)$. The inputs are $R1$, $R2$, $D1$, and $D2$; the appropriate reference is Eq. (4.9).
- The approximation to $X(12)$ is $X(13)$. The computation involves only a single integration. It is thus faster than the computation for $X(12)$, but a degree of accuracy is lost. The appropriate reference is Eq. (4.18).
- The fractional coverage for an *impact-sensitive target* is $X(14)$. The inputs $B3$ and $B4$ are necessary. The appropriate reference is Eq. (4.13).
- The fractional coverages $X(12)$, $X(13)$, and $X(14)$ use $CL1$ and $Q0$, which are dispenser range ballistic parameters. If the ballistic data are in tabular form, i.e., $CNPT=1$, and the table is read as an input array, set $CL1=1$ and $Q0=0$. The actual values will then be computed.
- The fractional coverages $X(2)$, $X(3)$, and $X(4)$ are the same as $X(12)$, $X(13)$, and $X(14)$; however, they are restricted to $N=1$ and $NB \leq 30$.

5.4. RIPPLE OF PATTERNS: INPUTS $S3$, $S4$, NB, R

We consider a ripple of N patterns, each containing NB subweapons, delivered with a common aiming error according to an aiming point array for the patterns. The $A(J)$, $B(J)$ of Sec. 5.1.3 are now the pattern aiming points. Each pattern is subject to a gaussian ballistic error with standard deviations $S3$ and $S4$ and to a reliability factor R. The NB subweapons are assumed to be uniformly distributed within the pattern. In the computations we had to make one of two assumptions. The first was that the damage level was uniform throughout the pattern. This assumption ignores the edge effects and is valid whenever the pattern area is much larger (say, 16/1) than the target area $4 \cdot B1 \cdot B2$ or the $MAE = \pi \cdot R1 \cdot R2$. Cases for which this assumption is made will be designated as "no edge effects." For some cases, the edge effects may be considered if the ballistic error standard deviations $S3$ and $S4$ are ignored. These cases will be designated as "edge effects."

5.4.1. Rectangular Patterns: *GCL3*, *GCL4*

Consider a ripple of N rectangular patterns of dimensions $2GCL3$, $2GCL4$, delivered with a common aiming error according to an aiming point array.

Basically, the flow diagram for a ripple of patterns is the same as that for a ripple of fixed dispensers. (See Sec. 5.3.) The coverage $X(103)$ for a fragment-sensitive target, ignoring edge effects, is computed according to Eq. (4.28). The inputs, which are derived from empirical data, are $GCL3$ and $GCL4$, which are the rectangular pattern dimensions; $R1$, $R2$, $D1$, $D2$, R; and $S3, S4 \neq 0$. The coverage $X(103)$ should be restricted to the cases in which $GCL3/R1$ and $GCL4/R2$ are greater than 5. If these ratios are not greater than 5, the coverage $X(104)$ for a fragment-sensitive target, including edge effects (i.e., $S3=S4=0$), should be used. The coverage $X(104)$ is computed according to Eq. (4.35).

The coverage $X(105)$ for an impact-sensitive target, ignoring edge effects, requires inputs $B3$, $B4$, and $S3, S4 \neq 0$. The ratios $2GCL3/B3$ or $2GCL4/B4$ must be greater than 5. If they are less than 5, the coverage $X(106)$ for an impact-sensitive target, including edge effects, should be used. The coverage $X(105)$ is computed according to Eq. (4.46) and $X(106)$ according to Eq. (4.49).

5.4.2. Ripple of Elliptic Patterns

The flow diagram for the following three cases is the same as that for the corresponding rectangular cases. The coverage $X(107)$ for a ripple of N elliptic patterns against an area of fragment-sensitive targets, ignoring edge effects, is computed according to Eq. (4.59). The coverage $X(107)$ should not be used if the ratios $ET1/R1$ or $ET2/R2$ are less than 5. The coverage $X(108)$ for a ripple of N elliptic patterns against an area of fragment-sensitive targets, including edge effects, should be used instead. The coverage $X(108)$ is computed according to Eq. (4.65).

The coverage $X(109)$ against an area of impact-sensitive targets, ignoring edge effects, is computed according to Eq. (4.70). The coverage $X(109)$ should not be used if the ratios $ET1/B1$ or $ET2/B2$ are less than 5; $S3$ and $S4$ should *not* be zero.

5.4.3. Elliptic Annulus Patterns: *ET*1, *ET*2, *W*1, *W*2, *R*

We consider a ripple of *N* elliptic annulus patterns that are delivered with a common aiming error according to an aiming point array. The axes of the outer ellipses are *ET*1 and *ET*2, while those for the inner ellipse are *W*1 and *W*2. The computation for the elliptic patterns involves the elliptic coverage function, which is time consuming. In each of the following cases, a circular approximation is given, an approach that is fast and in many cases gives a very close approximation. Further, if we are dealing with circular patterns, we may use these approximations in place of the elliptic patterns of the previous section by setting the inner radius to zero.

The coverage *X*(110) for a ripple of *N* elliptic patterns against an area of fragment-sensitive targets, ignoring edge effects, is computed according to Eq. (4.79) if the flag *N*110=1. If the ratios *ET*1/*R*1, *ET*2/*R*2, *W*1/*R*1, or *W*2/*R*2 are less than 5, it is preferable to use *X*(111), which takes edge effects into account.

For the special case in which the ellipses are circles, *R*1=*R*2 and *S*3=*S*4, the special approximation may be used if the ratios *ET*1/*S*3 and *W*1/*S*3 are larger than 3. In this case, the coverage *X*(100) for a ripple of *N* circular annulus patterns, ignoring edge effects, is computed according to Eq. (4.81) if the flag *N*100=1. Again, we may use *X*(100) at times in the elliptic case by converting the ellipses to circles of the same area and converting the ballistic errors to the circular case as above. Likewise, *X*(100) may be used in place of *X*(107) under the same restrictions by setting the inner radius to zero. The coverage *X*(111) for a ripple of *N* elliptic patterns against an area of fragment-sensitive targets, considering edge effects, is computed according to Eq. (4.82), if the flag *N*111=1.

For the special case in which the ellipses are circles and *R*1=*R*2, the coverage *X*(101) for a ripple of *N* circular annulus patterns against an area of fragment-sensitive targets is computed from Eq. (4.84) if the flag *N*101=1. We can use *X*(101) under these conditions in place of *X*(108) by setting the inner radius equal to zero.

The coverage *X*(112) for a ripple of *N* elliptic annulus patterns against an area of impact-sensitive targets, ignoring edge effects, is computed according to

Eq. (4.85) if the flag $N112=1$. In general, $X(112)$ should not be used if the ratios $ET1/B1$, $ET2/B2$ are less than 5. If the ratios $W1/B1$ or $W2/B2$ are less than 5, it is better to set $W1$ and $W2$ to zero and use $X(109)$.

For the special case in which the ellipses are circles, i.e., $ET1=ET2$ and $W1=W2$, and the ballistic error is circular, i.e., $S3=S4$, a special approximation may be used if the ratios $ET1/S3$ and $W2/S3$ are larger than 3. In this case, the coverage $X(102)$ for a ripple of N circular annulus patterns against an area of impact-sensitive targets, ignoring edge effects, is computed according to Eq. (4.87) if the flag $N102=1$. The same restrictions apply as for $X(112)$ for the ratios $ET1/B1$, $ET2/B2$, $W1/B1$, and $W2/B2$. Since the computation time for $X(102)$ is much smaller than for $X(112)$, it is sometimes worthwhile to use $X(102)$ even in the elliptic case by converting the ellipses to circles of the same area, and by converting the ballistic error to a circular case, letting $S=S3=S4$ be the equivalent ballistic standard deviation in both directions. Likewise, we can use $X(102)$ in place of $X(109)$ under the same restrictions by setting the inner radius to zero.

5.5. SUMMARY

The following tabular listings summarize the problems that are coded and provide a reference for further information.

RIPPLE OF BOMBS, SEC. 5.2

Output	*Description*	*Reference*
$X(11)$	Fragment-sensitive target	Eq. (3.7)
$X(1)$	Fragment-sensitive target; limited to the case of $N\leq 12$	Eq. (3.13)
$X(15)$	Impact-sensitive target	Eq. (3.20)
$X(5)$	Impact-sensitive target; limited to the case of $N\leq 12$	Eq. (3.21)

NOTE: The computations for $X(1)$ involve no numerical integrations, merely a finite sum. It is very fast and more accurate than $X(11)$ if N is small.

RIPPLE OF FIXED DISPENSERS, SEC. 5.3

Output	*Description*	*Reference*
$X(12)$	Fragment-sensitive target	Eq. (4.9)
$X(2)$	Fragment-sensitive target; limited to the case of $N=1$ and $NB \leq 30$	Eq. (4.11)
$X(13)$	Approximation for $X(12)$; faster in computation time, but not as accurate	Eq. (4.18)
$X(3)$	Approximation for $X(12)$; limited to the case of $N=1$ and $NB \leq 30$	Eq. (4.19)
$X(14)$	Impact-sensitive target	Eq. (4.13)
$X(4)$	Impact-sensitive target; limited to the case of $N=1$ and $NB \leq 30$	Eq. (4.14)

RIPPLE OF RECTANGULAR PATTERNS, SEC. 5.4.1

Output	*Description*	*Reference*
$X(103)$	Fragment-sensitive target, no edge effects	Eq. (4.28)
$X(104)$	Fragment-sensitive target, with edge effects	Eq. (4.35)
$X(105)$	Impact-sensitive target, no edge effects	Eq. (4.46)
$X(106)$	Impact-sensitive target, with edge effects	Eq. (4.49)

RIPPLE OF ELLIPTIC PATTERNS, SEC. 5.4.2

Output	*Description*	*Reference*
$X(107)$	Fragment-sensitive target, no edge effects	Eq. (4.59)
$X(108)$	Fragment-sensitive target, with edge effects	Eq. (4.65)
$X(109)$	Impact-sensitive target, no edge effects	Eq. (4.70)

RIPPLE OF ELLIPTIC ANNULUS PATTERNS, SEC. 5.4.3

Output	*Description*	*Reference*
$X(110)$	Fragment-sensitive target, no edge effects	Eq. (4.79)
$X(111)$	Fragment-sensitive target, with edge effects	Eq. (4.82)
$X(112)$	Impact-sensitive target, no edge effects	Eq. (4.85)

RIPPLE OF CIRCULAR ANNULUS PATTERNS, SEC. 5.4.3

Output	*Description*	*Reference*
$X(100)$	Fragment-sensitive target, no edge effects	Eq. (4.81)
$X(101)$	Fragment-sensitive target, with edge effects	Eq. (4.84)
$X(102)$	Impact-sensitive target, no edge effects	Eq. (4.86)

5.6. *QDHP* PROGRAM INPUTS

The entire data deck for the *QDHP* program is read as an array. Space has been provided for up to 1200 entries. A brief description of the entries follows.

Data (1)=*PRO*=number of problems to be processed.
Data (2)=*CN*=number of weapons.
Data (3)=*CNB*=number of bomblets per dispenser.
Data (4)=*CNVI*=number of intervals in the ballistic pattern density distribution table plus 1.
Data (5)=*CXAJ*=1 if the aiming pattern offsets in range are uniform;
=0 if the aiming pattern offsets are not uniform and must be read in.
Data (6)=*CXBJ*=1 if the aiming pattern offsets in deflection are uniform;
=0 otherwise. Must be read in.
Data (7)=*CNPT*=1 if there is a ballistic distribution table to be read in;
=0 otherwise.
Data (8)=*CNCP*=1 if the distribution of the density values in the ballistic table is cumulative;
=0 otherwise.
Data (9)=*FIMP*=the number of weapons per DPI (desired point of impact). This allows more than one weapon to be assigned per DPI; i.e., *CN*/(*FIMP***AJJ*) must be an integer ≥ 1. *FIMP***AJJ* must equal *CN* if the weapons are being dropped one at a time.
Data (10)=*ANNO*=a special flag to skip parts of the program. Set = 0 to compute any *X* between *X*(1) and *X*(5). Set = 1 to compute any other *X* and set = 2 to compute a combination of *X*(1) through *X*(5) and any other *X* values.
Data (11)=*AN*1=1. Compute *X*(1). Otherwise, set to 0. This definition of 1 that means "compute" and 0 that means "do not compute" is followed for all flags on the *X* values. The *AN* number corresponds to the *X* number to be computed. *X*(1) is used for fragment-sensitive targets. Restriction *CN*≤12. For larger *CN*, use *X*(11).
Data (12)=*AN*2=1. Compute *X*(2). Case of a long, narrow, fixed, dispenser-type pattern. Restrictions (*CN*=1, *CNB*≤30). Otherwise, use *X*(12).
Data (13)=*AN*3=1. Compute *X*(3). An expansion case of *X*(13). (*CN*=1, *CNB*≤30).
Data (14)=*AN*4=1. Compute *X*(4). Used for a dispenser pattern against a hard target. (*CN*= [illegible] *CNB*≤30). Otherwise, use *X*(14).
Data (15)=*AN*5=1. Compute *X*(5). Impact-sensitive target. (*CN*≤4). Otherwise, use *X*(15).
Data (16)=*AN*10=1. Compute *X*(10). Hand method. Rarely used.
Data (17)=*AN*11=1. Compute *X*(11). Used for fragment-sensitive target with *CN*≥13.
Data (18)=*AN*12=1. Compute *X*(12). Used for a fixed dispenser weapon against a fragment-sensitive target. Needs *R*1, *R*2, *CL*1, *Q*0, *S*1, and *S*2 inputs.
Data (19)=*AN*13=1. Compute *X*(13). An approximation to *X*(12). One assumes a uniform distribution of the bomblets [illegible] range over the distance 2×*CL*3 and a gaussian distribution in deflection.
Data (20)=*AN*14=1. Compute *X*(14). Similar to *X*(12) for a fixed dispenser pattern against a hard target.
Data (21)=*AN*15=1. Compute *X*(15). Used for impact-sensitive target. Needs *B*3 and *B*4 inputs, the target dimensions. (*CN*>4).
Data (22)=*A*100=1. Compute *X*(100). Case of a ripple of dispensers with a doughnut or circular pattern. Used for fragment-sensitive target with no edge effects.
Data (23)=*A*101=1. Compute *X*(101). Fragment-sensitive target with edge effects.
Data (24)=*A*102=1. Compute *X*(102). Vulnerable area, no edge effects
Data (25)=*A*103=1. Compute *X*(103). Series of rectangles. fragment-sensitive target, but no edge effects.

Data (26)=*A*104=1. Compute *X*(104). *S*3 and *S*4 must equal 0. Series of rectangles, fragment-sensitive target with edge effects.
Data (27)=*A*105=1. Compute *X*(105). Series of rectangles, vulnerable area, but no edge effects.
Data (28)=*A*106=1. Compute *X*(106). Series of rectangles, vulnerable area with edge effects. *S*3 and *S*4 set to 0.
Data (29)=*A*107=1. Compute *X*(107). Must have values for *S*3 and *S*4. Series of ellipses, fragment-sensitive target, no edge effects.
Data (30)=*A*108=1. Compute *X*(108). *S*3 and *S*4 equal 0. Series of ellipses, fragment-sensitive target with edge effects.
Data (31)=*A*109=1. Compute *X*(109). *S*3 and *S*4 must be > 0. Series of ellipses, vulnerable area, no edge effects.
Data (32)=*A*110=1. Compute *X*(110). *S*3 and *S*4 must be > 0. Elliptical annulus, fragment-sensitive target, no edge effects
Data (33)=*A*111=1. Compute *X*(111). *S*3 and *S*4 must be 0. Elliptical annulus, fragment-sensitive target with edge effects.
Data (34)=*A*112=1. Compute *X*(112). *S*3 and *S*4 must be > 0. Elliptical annulus, vulnerable area, no edge effects.
Data (35)=*D*=desired spacing in range in feet between bombs.
Data (36)=*DF*=desired spacing in deflection in feet between bombs.
Data (37)=*SP*=the product of the reliability factor and the probability of a kill if hit, providing it is known. Otherwise, 1.
Data (38)=*AJJ*=number of wing stations ≥ 1.
Data (39)=*A*3=target area dimension (length). If you are considering a point target, *A*3=*A*4=0.
Data (40)=*A*4=target area dimension (width).
Data (41)=*B*3=target dimension for a hard target. Length ≥ 1.
Data (42)=*B*4=target dimension for a hard target. Width ≥ 1.
Data (43)=*S*1=bomb ballistic standard error in range. (A fixed dispenser is considered a bomb.)
Data (44)=*S*2=bomb ballistic standard error in deflection.
Data (45)=*S*3=dispenser ballistic standard error in range.
Data (46)=*S*4=dispenser ballistic standard error in deflection.
Data (47)=*T*1=aim standard error in range. σ_x=REP1.4828.
Data (48)=*T*2=aim standard error in deflection.
Data (49)=*SU*1=coordinate of the aim point in the x direction for an offset target.
Data (50)=*SU*2=same as Data (49) but in the y direction.
Data (51)=*U*1=the number of steps used in integration over a quarter of the total space. In general, *U*1=8. If *CL*1 is too small, an increase in *U*1 will solve the problem.
Data (52)=*U*2=*U*1.
Data (53)=*CL*1=one-half the length of the dispenser ballistic table.
Data (54)=*Q*0=standard error of the tabular values in range of the dispenser ballistic table.
Data (55)=*R*1=effectiveness radii in range in the case of an MAE type of effectiveness index, i.e., MAE= ·*R*1·*R*2. *R*1≥1.
Data (56)=*R*2=effectiveness radii in deflection. *R*2≥1.
Data (57)=*D*1=initial value constant when a Carlton-type damage function is used. In general, *D*1=1.
Data (58)=*D*2=*D*1.
Data (59)=*R*=reliability factor for a dispenser, if known. Otherwise, 1.
Data (60)=*W*1=inner semiaxis of a dispenser elliptical annulus in the x direction.
Data (61)=*W*2=inner semiaxis of a dispenser elliptical annulus in the y direction.
Data (62)=*ET*1=outer semiaxis of a dispenser elliptical pattern in the x direction.
Data (63)=*ET*2=outer semiaxis of a dispenser elliptical pattern in the y direction.
Data (64)=*GCL*3=half the dispenser rectangular pattern dimension in the x direction.
Data (65)=*GCL*4=half the dispenser rectangular pattern dimension in the y direction.
Data (66)=*UU*5=number of integration steps for offset ellipse function. Use 40.

Data (67)=*VV* starting point for integration for offset ellipse function. Use 0.
Data (68)=*ANUM*=1 if dispenser deliveries against rectangular target areas are to be computed. *X*(100) through *X*(112). Otherwise, 0.
Data (101)=*A*=[*A*(*J*),*J*=1,*N*] array. Table of aim points if spacing (*D*) is not uniform in range. *CXAJ*=0.
Data (301)=*B*=[*B*(*J*),*J*=1,*N*] array. Table of aim points if spacing (*DF*) is not uniform in deflection. *CXBJ*=0.
Data (501)=*SVI*=*SVI*(*J*),*J*=1,*NVI*. Intervals on the ballistic table. First value must be 0. *NPT*=1.
Data (601)=*BPI*=*BPI*(*J*),*J*=1,*NVI*. Density values on the ballistic table. *CNCP*=0.
Data (701)=*TI*=*TI*(*J*),*J*=1,*NVI*. Cumulative density values on the ballistic table. *CNCP*=1.

5.6.1. Input Method Used in *QDHP* Program

The first card is the number of the first problem to be solved and must be an integer. It is read in on *I*5 format. If the user is cut off because of interval timer overflow before he has processed all his cases, the process allows minimum reassemblage of the data deck without interrupting the run sequence. The entire data array is read in on format (5*I*1,*I*7,5*F*12.11).

The first five entries are flags to read or skip a data field on that card. A blank or zero means read and store, and a one means skip the field. This system of reading data allows the user to read in only the inputs that he wishes changed for subsequent runs. In the second field of each data card is the index of the first data item on that card. The data are read five items per card. For ease of keypunching, left adjust all data items. A minus sign in column 8 of the last data card of the data deck is essential to mark the end of the set. To run additional cases, add the data cards with the changed parameters and the appropriate flags in columns 1 through 5. The last changed card will have a minus sign in column 8.

The listing on the opposite page presents typical data entries for three cases; the computer program for the simplified weapons evaluation model follows:

Columns												
1-5	8	10-12	13	14-24	25	26-36	37	38-48	49	50-60	61	62-72
		1	±	*PRO*	±	*CN*	±	*CNB*	±	*CNVI*	±	*CXAJ*
		6		*CXBJ*		*CNPT*		*CNCP*		*FIMP*		*ANN0*
		11		*AN1*		*AN2*		*AN3*		*AN4*		*AN5*
		16		*AN10*		*AN11*		*AN12*		*AN13*		*AN14*
		21		*AN15*		*A100*		*A101*		*A102*		*A103*
		26		*A104*		*A105*		*A106*		*A107*		*A108*
		31		*A109*		*A110*		*A111*		*A112*		*D*
		36		*DF*		*SP*		*AJJ*		*A3*		*A4*
		41		*B3*		*B4*		*S1*		*S2*		*S3*
		46		*S4*		*T1*		*T2*		*SU1*		*SU2*
		51		*U1*		*U2*		*CL1*		*Q0*		*R1*
		56		*R2*		*D1*		*D2*		*R*		*W1*
		61		*W2*		*ET1*		*ET2*		*GCL3*		*GCL4*
		66		*UU5*		*VV5*		*ANUM*				
		101		*A*								
		301		*B*								
		501		*SVI*								
		601		*BPI*								
	-	701		*TI*								
10011	-	46				*T1*		*T2*				
10010		1				*CN*						
11101		6								*FIMP*		
10011	-	46				*T1*		*T2*				

5.7. COMPUTER PROGRAM FOR SIMPLIFIED WEAPONS EVALUATION MODEL (For System 360/65)

```
C     UPDATED MASTER DECK  QDHP PROGRAM RM-5677 AS LOADED ON DISC AT RAND
      DIMENSION A(200),B(200),A22(200),B22(200),DATA(1200)
      DIMENSION SVI(100),BPI(100),TI(100)
      COMMON DATA
      COMMON SE4,SE3,U3,U4,Z,SQ1,SQ2,Q1,Q2,CL2,PI,SPI,SQ3,C,CL3,AT1,AT2
      COMMON BS1,BS2,SE12,SE22,S5,C45,SW3,SW4,ST1,SU3,SU4,AL1,AL2,SW1
      COMMON FCL3,FCL4,ES1,ES2,ER1,ER2,ETB1,ETB2,WR1,WR2,WB1,WB2,WS1,WS2
      COMMON A22,B22,A1,A2,B1,B2
      COMMON SQR2,SPI2,PI2,AJMX,BJMX,TU1,TU2,T12,T22
      COMMON R32,RD1,RD2,SPR,SW12,SW22,SRR
      COMMON SN100,SN101,SN102,SN110,SN112,X112
      COMMON X100,X101,X102,X103,X104,X105,X106,X107,X108,X109,X110,X111
      COMMON N100,N101,N102,N110,N112,INUM
      COMMON KK,KOUT,KOO,KO,K11,LU3,LU4,N,NB,LU5
      EQUIVALENCE (DATA(1),PRO),(DATA(2),CN),(DATA(3),CNB),(DATA(4),CNVI
     1 ),(DATA(5),CXAJ),(DATA(6),CXBJ),(DATA(7),CNPT),(DATA(8),CNCP),
     2 (DATA(9),FIMP),(DATA(10),ANNO),(DATA(11),AN1),(DATA(12),AN2),
     3 (DATA(13),AN3),(DATA(14),AN4),(DATA(15),AN5),(DATA(16),AN10),
     4 (DATA(17),AN11),(DATA(18),AN12),(DATA(19),AN13),(DATA(20),AN14),
     5 (DATA(21),AN15),(DATA(22),A100),(DATA(23),A101),(DATA(24),A102),
     6 (DATA(25),A103),(DATA(26),A104),(DATA(27),A105),(DATA(28),A106),
     7 (DATA(29),A107),(DATA(30),A108),(DATA(31),A109),(DATA(32),A110)
      EQUIVALENCE (DATA(33),A111),(DATA(34),A112),(DATA(35),D),(DATA(36)
     1 ,DF),(DATA(37),SP),(DATA(38),AJJ),(DATA(39),A3),(DATA(40),A4),
     2 (DATA(41),B3),(DATA(42),B4),(DATA(43),S1),(DATA(44),S2),(DATA(45)
     3 ,S3),(DATA(46),S4),(DATA(47),T1),(DATA(48),T2),(DATA(49),SU1),
     4 (DATA(50),SU2),(DATA(51),U1),(DATA(52),U2),(DATA(53),CL1),
     5 (DATA(54),Q0),(DATA(55),R1),(DATA(56),R2),(DATA(57),D1),(DATA(58)
     6 ,D2),(DATA(59),R),(DATA(60),W1),(DATA(61),W2),(DATA(62),ET1),
     7 (DATA(63),ET2),(DATA(64),GCL3),(DATA(65),GCL4)
      EQUIVALENCE  (DATA(66),UU5),(DATA(67),VV5),(DATA(68),ANUM)
      EQUIVALENCE (DATA(101),A),(DATA(301),B),(DATA(501),SVI),(DATA(601)
     1 ,BPI),(DATA(701),TI)
    2 FORMAT (8F10.4)
    3 FORMAT (1H0,6X,1HD9X,2HDF,8X,2HSP,9X,1HN,9X,2HNB,7X,3HNVI,7X,3HNN4
     1/3F10.2,4I10)
    4 FORMAT (1H03X,13HALL A(J) = 0.)
    5 FORMAT (1H03X,13HALL B(J) = 0.)
    6 FORMAT(6E20.8)
    7 FORMAT(2A4,1X,I1,6I5)
    8 FORMAT (1H1,1X,2I10,6I5)
    9 FORMAT (1H05X,3HCL1,7X,2HQ0,8X,2HU3,8X,2HU4,8X,3HSE3,7X,3HSE4,9X,1
     1HE,9X,1HC/1H 2X,8F10.5)
   10 FORMAT (1H0,4X,2HA3,8X,2HA4,8X,2HB3,8X,2HB4,8X,2HS1,8X,2HS2,8X,2HS
     13,8X,2HS4/8F10.4)
   11 FORMAT (1H0,4X,2HT1,8X,2HT2,7X,3HSU1,7X,3HSU2,8X,2HU1,8X,2HU2,8X,2
     1HL1,8X,2HQ0/8F10.4)
   12 FORMAT (1H03X,4HA(J))
   13 FORMAT (1H03X,4HB(J))
   14 FORMAT (16I5)
```

```
   15 FORMAT(1H05X,4HX(1),6X,4HX(2),6X,4HX(3),6X,4HX(4),6X,4HX(5)//4X,5F
     110.6)
   16 FORMAT (1H05X,6F10.6,3E20.8)
   17 FORMAT(1H05X,5HX(10),5X,5HX(11),5X,5HX(12),5X,5HX(13),5X,5HX(14),5
     1X,5HX(15),5X,5HX(30)//4X,7F10.6//1H 5X,6HX(100),4X,6HX(101),4X,6HX
     2(.02),4X,6HX(103),4X,6HX(104),4X,6HX(105),4X,6HX(106)//4X,7F10.6//
     31H 5X,6HX(107),4X,6HX(108),4X,6HX(109),4X,6HX(110),4X,6HX(111),4X,
     46HX(112)//4X,7F10.6)
   19 FORMAT (1H0,4X,3HET1,7X,3HET2,6X,4HGCL3,6X,4HGCL4,7X,3HUU5,7X,3HVV
     15/8F10.4)
   22 FORMAT(1H02X,2HN0,3X,2HN1,3X,2HN2,3X,2HN3,3X,2HN4,3X,2HN5,5H  N10,
     15H  N11,5H  N12,5H  N13,5H  N14,5H  N15/16I5)
   24 FORMAT (1H0,4X,2HR1,8X,2HR2,8X,2HD1,8X,2HD2,9X,1HR,8X,2HW1,8X,2HW2
     1/8F10.4)
   25 FORMAT (1H02X,3H N0,5H N100,5H N101,5H N102,5H N103,5H N104,5H N10
     15,5H N106,5H N107,5H N108,5H N109,5H N110,5H N111,5H N112/16I5)
 2006 FORMAT(1H0111H EQUATIONS ARE INCONSISTENT.  CL1 MUST SATISFY BOTH
     1CL1 < OR = TO C*SQRT(3.) AND CL1 > OR = TO 1./2./AJJ. Q0=0./61H IF
     2THE TWO ABOVE VALUES FOR CL1 ARE CLOSE, CHOOSE ONE AND GO.)
 2007 FORMAT(1H0,61H CHECK INPUTS AJJ AND FIMP. CN/(AJJ*FIMP) MUST BE AN
     1 INTEGER.)
  732 FORMAT (1H0,76H    THERE IS NO SOLUTION. THE BOMBLET IMPACT POINTS
     1 ARE BUNCHED MORE THAN IN/1H ,66H A GAUSSIAN DISTRIBUTION. WE HAVE
     2 ASSUMED A GAUSSIAN DISTRIBUTION,/1H ,87H  I.E. WE HAVE SET CL1=0.
     3 AND Q0=C, THE STANDARD DEVIATION OF THE TABULAR DISTRIBUTION.)
  742 FORMAT (1H0,70H   THERE IS NO SOLUTION. PROBABLY THE TABULAR DISTR
     1IBUTION IS BIMODAL./1H ,77H   WE HAVE USED A UNIFORM DISTRIBUTION
     2FOR THE RANGE DISPENSER BOMBLET IMPACT/1H ,47H  PATTERN, I.E. WE S
     3ET Q0=0. AND CL1=C*SQRT(3).)
   32 FORMAT(I2)
   34 FORMAT (1H0,6X,6HSVI(J))
   35 FORMAT (1H0,6X,5HTI(J))
   36 FORMAT (1H0,6X,6HBPI(J))
   39 FORMAT(1H03X,4HKO =I5,F10.6)
      DO 1003 I = 1,1200
      DATA(I) = 0.
 1003 CONTINUE
      PI = 3.14159265
      PI2 = PI * 2.
      SPI = SQRT(PI)
      SPI2 = SPI * .5
      SQR3 = SQRT(3.)
      SQR2 = SQRT(2.)
      READ (5,14) NUM
 1111 CALL DECRD (DATA)
   40 NPRO = PRO + .000001
      N    = CN  + .000001
      NB   = CNB + .000001
      NVI  = CNVI+ .000001
      NXAJ = CXAJ+ .000001
      NXBJ = CXBJ+ .000001
      NPT  = CNPT+ .000001
      NCPT = CNCP+ .000001
      NIMP = FIMP+ .000001
      NN4  = AJJ + .000001
      INUM = ANUM + .000001
      NO   = ANNO+ .000001
      N1   = AN1 + .000001
      N2   = AN2 + .000001
```

```
      N3    = AN3 + .000001
      N4    = AN4 + .000001
      N5    = AN5 + .000001
      N10   = AN10+ .000001
      N11   = AN11+ .000001
      N12   = AN12+ .000001
      N13   = AN13+ .000001
      N14   = AN14+ .000001
      N15   = AN15+ .000001
      IF(INUM.EQ.0) GO TO 55
      N100 = A100+ .000001
      N101 = A101+ .000001
      N102 = A102+ .000001
      N103 = A103+ .000001
      N104 = A104+ .000001
      N105 = A105+ .000001
      N106 = A106+ .000001
      N107 = A107+ .000001
      N108 = A108+ .000001
      N109 = A109+ .000001
      N110 = A110+ .000001
      N111 = A111+ .000001
      N112 = A112+ .000001
   55 LU5 = UU5 + .000001
      WRITE (6,8) NUM,NPRO,NXAJ,NXBJ,NPT,NCPT,NIMP,INUM
      IF(INUM.GT.0) GO TO 57
      WRITE (6,22) N0,N1,N2,N3,N4,N5,N10,N11,N12,N13,N14,N15
      GO TO 56
   57 WRITE(6,25) N0,N100,N101,N102,N103,N104,N105,N106,N107,N108,N109,
     1N110,N111,N112
   56 WRITE(6,3) D,DF,SP,M,NB,NVI,NN4
      ANN4 = AJJ
      ANN3 = CN/(ANN4*FIMP)
      IZ = IFIX(ANN3)
      AIP = IZ
      FP3 = ANN3 - AIP
      IF(FP3.EQ.0.) GO TO 58
       WRITE (6,2007)
      GO TO 392
   58 WRITE(6,10) A3,A4,B3,B4,S1,S2,S3,S4
      WRITE (6,11)T1,T2,SU1,SU2,U1,U2,CL1,Q0
      WRITE (6,24) R1,R2,D1,D2,R,W1,W2
      WRITE (6,19) ET1,ET2,GCL3,GCL4,UU5,VV5
      IF(NPT.EQ.0) GO TO 93
      WRITE(6,34)
      WRITE (6,2) (SVI(J),J=1,NVI)
      IF(NCPT.EQ.0) GO TO 94
      WRITE(6,35)
      WRITE(6,2)(TI(J),J=1,NVI)
      BPI(1) = 0.
      DO 92 K = 2,NVI
      BPI(K) = TI(K) - TI(K-1)
   92 CONTINUE
   94 WRITE(6,36)
      WRITE (6,2) (BPI(J),J=1,NVI)
      TI(1) = 0.
      DO 27 K = 2,NVI
      TI(K) = TI(K-1)+BPI(K)
   27 CONTINUE
```

```
   93 SN100 = 0.
      SN101 = 0.
      SN102 = 0.
      SN110 = 0.
      SN112 = 0.
      IF(T1.EQ.0.) T1= .00000001
      IF(T2.EQ.0.) T2= .00000001
      A1 = A3 * .5
      A2 = A4 * .5
      B1 = B3 * .5
      B2 = B4 * .5
      CN1 = CN - 1.
      CN12= (CN+1.)*.5
      S12 = S1*S1
      S22 = S2*S2
      TU1 = T1*U1
      TU2 = T2*U2
      ST1 = SU1/T1
      T12 = T1*T1
      T22 = T2*T2
      AT1 = A1/T1
      AT2 = A2/T2
      ST2 = SU2/T2
      BT1 = B1/T1
      R12 = R1*R1
      R22 = R2*R2
      BS1 = 0.
      BS2 = 0.
      IF(S1.NE.0.) BS1 = B1/S1
      IF(S2.NE.0.) BS2 = B2/S2
10112 D12 = D1*D1
      D22 = D2*D2
      NK1 = N - 1
      RD1 = R12/(2.*D1)
      RD2 = R22/(2.*D2)
      AL1 = SQRT(RD1)
      AL2 = SQRT(RD2)
      X1 = 0.
      X2 = 0.
      X3 = 0.
      X4 = 0.
      X5 = 0.
      X10 = 0.
      X11 = 0.
      X12 = 0.
      X13 = 0.
      X14 = 0.
      X15 = 0.
      X30 = 0.
      X100 = 0.
      X101 = 0.
      X102 = 0.
      X103 = 0.
      X104 = 0.
      X105 = 0.
      X106 = 0.
      X107 = 0.
      X108 = 0.
      X109 = 0.
```

```
      X11C = 0.
      X111 = 0.
      X112 = 0.
      E = 0.
      C = 0.
      KO = 0
      KPC = 0
      NRST = 0
      DO 300 J = 1,N
      IP = 1 + (J-1)/(NIMP*NN4)
      CIP = IP
      IF(NXAJ.NE.1) GO TO 1798
      A(J) = D*(CIP-ANN3*.5-.5)
      SD3 = D
 1798 A22(J) = A(J)*A(J)
      IF(NXBJ.NE.1) GO TO 1799
      AJ = J
       JF = (AJ-1.)/ANN4
      FPC = JF
      B(J)=((2.*AJ-1.)-ANN4*(2.*FPC+1.))*DF*.5
      SD4 = DF
 1799 B22(J) = B(J)*B(J)
  300 CONTINUE
      IF(NXAJ.EQ.1) GO TO 1795
      IF(N.NE.1)GO TO 301
      SD3 = 0.
      GO TO 1795
  301 AJMX = A(1)
      AJMN = A(1)
      DO 302 J = 2,N
      IF(A(J).GT.AJMX) GO TO 303
      IF(A(J).LT.AJMN) AJMN = A(J)
      GO TO 302
  303 AJMX = A(J)
  302 CONTINUE
      SD3 = (AJMX-AJMN)/CN1
 1795 IF(NXBJ.EQ.1) GO TO 1994
      IF(N.NE.1) GO TO 1796
      SD4 = 0.
      GO TO 1994
 1796 BJMX = B(1)
      BJMN = B(1)
      DO 304 J = 2,N
      IF(B(J).GT.BJMX) GO TO 305
      IF(B(J).LT.BJMN) BJMN = B(J)
      GO TO 304
  305 BJMX = B(J)
  304 CONTINUE
      SD4 = (BJMX-BJMN)/CN1
 1994 IF(SD3.EQ.0.) GO TO 1996
      WRITE(6,12)
      WRITE(6, 2)(A(J),J=1,N)
 1997 IF(SD4.EQ.0.) GO TO 1997
      WRITE(6,13)
      WRITE(6, 2)(B(J),J=1,N)
      GO TO 1995
 1996 WRITE (6,4)
      GO TO 1797
```

```
1997 WRITE (6,5)
1995 IF(CL1.NE.1.) GO TO 312
 700 SZ = 0.
     IF(NPT.EQ.0) GO TO 312
 711 SUSM = 0.
     SMLM = 0.
     KPO = 1
     DO 716 LL = 2,NVI
     V2 = (SVI(LL) + SVI(LL-1))*.5
     SUSM = SUSM + V2*BPI(LL)
     V3 = SVI(LL)*SVI(LL)+SVI(LL)*SVI(LL-1)+SVI(LL-1)*SVI(LL-1)
     SMLM = SMLM + V3/3.*BPI(LL)
 716 CONTINUE
     C = SQRT(SMLM-SUSM*SUSM)
     DO 701 K = 1,NVI
     IF(TI(K).GE..25) GO TO 702
 701 CONTINUE
 702 J = K
     SX1 = SVI(J-1) + (SVI(J)-SVI(J-1))*((.25-TI(J-1))/(TI(J)-TI(J-1)))
     DO 703 K = 1,NVI
     IF(TI(K).GE..75) GO TO 704
 703 CONTINUE
 704 I=K
     SX2 = SVI(I-1)+(SVI(I)-SVI(I-1))*((.75-TI(I-1))/(TI(I)-TI(I-1)))
     SX3 = (SX2-SX1)*.5
     SX3C = SX3/C
     IF(SX3C.GE..6743) GO TO 7028
     WRITE(6,732)
     GO TO 7085
7028 IF(SX3C.LE.(SQR3*.5+.0001)) GO TO 7030
     WRITE(6,742)
     GO TO 708
7030 IF(ABS(SX3C-SQR3*.5).LE..0001) GO TO 708
     IF(ABS(SX3C-.6744).LE..0001) GO TO 7085
     Z1 = 0.
     Z2 = C
     SZ = C*.5
7040 CSZ = SQRT(3.*(C*C-SZ*SZ))
     CALL FF(0.,SX3,CSZ,SZ,AF)
     CK = AF-.5
     IF(ABS(CK).LE..0001) GO TO 707
     IF(CK.LT.0.) Z1=SZ
     IF(CK.GE.0.)Z2=SZ
     SZ = (Z1+Z2)*.5
     IF(ABS(Z1-Z2).LE..01) GO TO 707
     GO TO 7040
 707 Q0 = SZ
     CL1 = SQRT(3.*(C*C-SZ*SZ))
     GO TO 709
 708 Q0 = 0.
     CL1 = SQR3*C
     GO TO 709
7085 CL1 = 0.
     Q0 = C
 709 KPO = 1
 312 Q02 = Q0 * Q0
     SSR = SP * SPI * R1
     SPR = SP*PI*R1*R2
     SQ1 = SQRT(RD1  + S12)
```

```
      SQ3 = SQRT(QQ2 + RD1)
      Q1  = SQRT(SQ1*SQ1 + T12)
      SQ2 = SQRT(R22/(2.*D2)+ S22)
      Q2 = SQRT(SQ2*SQ2 + T22)
 1800 SSU3 = 0.
      SSU4 = 0.
      AJMX = ABS(SU1 - A(1))
      BJMX = ABS(SU2 - B(1))
      IF(N.EQ.1) GO TO 3031
      DO 3030 J = 2,N
      ASU1 = ABS(SU1 - A(J))
      BSU2 = ABS(SU2 - B(J))
      IF(ASU1.GT.AJMX) AJMX = ASU1
      IF(BSU2.GT.BJMX) BJMX = BSU2
 3030 CONTINUE
 3031 DO 306 J = 1,N
      NJ1 = N-J+1
      SSU3 = SSU3 + ABS(A( NJ1)+A(J))
      SSU4   = SSU4 + ABS(B(NJ1)+B(J))
  306 CONTINUE
      SU3 = SU1 + SSU3
      SU4 = SU2 + SSU4
      KK  = 1
      IF(SU3.EQ.0.) GO TO 3165
      U3 = 2.*U1
      GO TO 3166
 3165 U3 = U1
 3166 IF(SU4.EQ.0.) GO TO 3167
      U4 = 2.*U2
      GO TO 317
 3167 U4 = U2
  317 LU3 = U3
      LU4 = U4
      IF(T1.EQ..00000001) GO TO 3192
      SE1 = (4.+AT1)/U1
      SE12 = SE1 * .5
      AK = U3
      GO TO 313
  314 AK = AK - 1.
  313 AX = FXJ(AK)
      CALL H(AX,AT1,HXL)
      AA = 1.- HXL
      IF(AA.GT..0001) GO TO 3175
      GO TO 314
 3175 SE3 =(SE12 + AX)/U1
  318 SE2 = (4.+AT2)/U2
      SE22 = SE2 * .5
      AK = U4
      GO TO 3181
 3182 AK = AK - 1.
 3181 AY = FYJ(AK)
      CALL H(AY,AT2,HXL)
      AA = 1.-HXL
      IF(AA.GT..0001) GO TO 3185
      GO TO 3182
 3185 SE4 =(SE22 + AY)/U2
 3192 IF(NO.EQ.0) GO TO 340
      KOUT = 0
 3002 IF(INUM.GT.0) CALL Z100(N103,N104,N105,N106,N107,N108,N109,N111)
```

```
      IF(N11.EQ.0) GO TO 324
      KO = 11
      IF(T1.EQ..00000001) GO TO 633
      GSE1=(AJMX+4.*SQ1)/TU1
      GSE2 = (BJMX + 4.*SQ2)/TU2
      SE12 = AMIN1(SE3,GSE1)*.5
      SE22 = AMIN1(SE4,GSE2)*.5
  633 CALL A50
  630 X11 = Z
      WRITE (6,39) KO,X11
  324 IF(N12.EQ.0) GO TO 325
      KO = 12
      IF(T1.EQ..00000001) GO TO 723
      GSE1 = (AJMX + CL1 + 4.*SQ3)/TU1
      GSE2 = (BJMX + 4.*SQ2)/TU2
      SE12 = AMIN1(SE3,GSE1)*.5
      SE22 = AMIN1(SE4,GSE2)*.5
  723 C    = SSR/SQ3
      CALL A50
  735 X12 = Z
      WRITE (6,39) KO,X12
  325 IF(N13.EQ.0) GO TO 332
  820 CL3 = SQRT(CL1**2 + 3.*SQ3**2)
      IF(T1.EQ..00000001) GO TO 825
      GSE2 = (BJMX + 4.*SQ2)/TU2
      SE22 = AMIN1(SE4,GSE2)*.5
  825 C = (SSR * .5)/CL3
      KOO = 1
      KO = 13
      CALL A41
  840 X13 = Z
      WRITE (6,39) KO,X13
  332 KOUT = 1
      IF(N15.EQ.0) GO TO 334
      KO = 15
      IF(T1.EQ..00000001) GO TO 3033
      GSE1 = (AJMX + B1 + 4.*S1)/TU1
      GSE2 = (BJMX + B2 + 4.*S2)/TU2
      SE12 = AMIN1(SE3,GSE1)*.5
      SE22 = AMIN1(SE4,GSE2)*.5
 3033 CALL A50
      X15 = Z
      WRITE (6,39) KO,X15
  334 IF(N14.EQ.0) GO TO 335
      KO = 14
      IF(T1.EQ..00000001) GO TO 3341
      GSE1 = (AJMX + CL1 + B1 + 4.*QO)/TU1
      GSE2 = (BJMX + B2 + 4.*S2)/TU2
      SE12 = AMIN1(SE3,GSE1)*.5
      SE22 = AMIN1(SE4,GSE2)*.5
 3341 CALL A50
      X14 = Z
      WRITE (6,39) KO,X14
  335 IF(N10.EQ.0) GO TO 336
 1515 CL3 = SQRT(CL1**2 + 3.*SQ3**2)
      CL4 = SQ2*SQR3
      CALL FF(SU1,CL3,A1,T1,AF)
      ZO = AF
      CALL FF(SU2,CL4,A2,T2,AF)
```

```
      Z = ZO * AF
      SRC = SP*PI/4.*R1/CL3*R2/CL4
  153 X10 = Z * R * (1.-(1.-SRC)**NB)
      CALL FF(SU1,B1,CL3,T1,AF)
      ZO = AF
      CALL FF(SU1,B2,CL4,T2,AF)
      Z  = ZO * AF
      IF(A1.NE.0.) GO TO 1560
      X30 = 1. - (1.-SP*Z)**NB
      GO TO 336
 1560 X30 = 0.
  336 IF(NO.EQ.1) GO TO 392
  340 IF(SD4.NE.0.) GO TO 392
      IF(T1.EQ..00000001) GO TO 3400
      GSE1 = (AJMX + B1+4.*S1)/TU1
      SE12 = AMIN1(SE3,GSE1)*.5
 3400 CALL XRO(X1,X2,X3,X4,X5,SD3,SD4)
      WRITE (6,15) X1,X2,X3,X4,X5
  392 WRITE (6,17) X10,X11,X12,X13,X14,X15,X30,X100,X101,X102,X103,X104,
     1X105,X106,X107,X108,X109,X110,X111,X112
      IF(KPO.EQ.0) GO TO 1112
 1113 CL1 = 1.
      QO = 0.
 1112 IF(NUM.EQ.NPRO) GO TO 2222
      CALL DECRD (DATA)
      NUM = NUM + 1
      IF(SN100.NE.0.) N100 = SN100
      IF(SN101.NE.0.) N101 = SN101
      IF(SN102.NE.0.) N102 = SN102
      IF(SN110.NE.0.) N110 = SN110
      IF(SN112.NE.0.) N112 = SN112
      GO TO 40
 2222 CALL EXIT
      END


       SUBROUTINE Z100(N103,N104,N105,N106,N107,N108,N109,N111)
      DIMENSION A(200),B(200),A22(200),B22(200),DATA(1200)
      COMMON DATA
      COMMON SE4,SE3,U3,U4,Z,SQ1,SQ2,Q1,Q2,CL2,PI,SPI,SQ3,C,CL3,AT1,AT2
      COMMON BS1,BS2,SE12,SE22,S5,C45,SW3,SW4,ST1,SU3,SU4,AL1,AL2,SW1
      COMMON FCL3,FCL4,ES1,ES2,ER1,ER2,ETB1,ETB2,WR1,WR2,WB1,WB2,WS1,WS2
      COMMON A22,B22,A1,A2,B1,B2
      COMMON SQR2,SPI2,PI2,AJMX,BJMX,TU1,TU2,T12,T22
      COMMON RB2,RD1,RD2,SPR,SW12,SW22,SRR
      COMMON SN100,SN101,SN102,SN110,SN112,X112
      COMMON X100,X101,X102,X103,X104,X105,X106,X107,X108,X109,X110,X111
      COMMON N100,N101,N102,N110,N112,INUM
      COMMON KK,KOUT,KOO,KO,K11,LU3,LU4,N,NB,LU5
      EQUIVALENCE (DATA(33),A111),(DATA(34),A112),(DATA(35),D),(DATA(36)
     1 ,DF),(DATA(37),SP),(DATA(38),AJJ),(DATA(39),A3),(DATA(40),A4),
     2 (DATA(41),B3),(DATA(42),B4),(DATA(43),S1),(DATA(44),S2),(DATA(45)
     3 ,S3),(DATA(46),S4),(DATA(47),T1),(DATA(48),T2),(DATA(49),SU1),
     4 (DATA(50),SU2),(DATA(51),U1),(DATA(52),U2),(DATA(53),CL1),
     5 (DATA(54),GO),(DATA(55),R1),(DATA(56),R2),(DATA(57),D1),(DATA(58)
     6 ,D2),(DATA(59),R),(DATA(60),W1),(DATA(61),W2),(DATA(62),ET1),
     7 (DATA(63),ET2),(DATA(64),GCL3),(DATA(65),GCL4)
      EQUIVALENCE (DATA(101),A),(DATA(301),B)
    2 FORMAT (8F10.4)
```

```
    6 FORMAT(6E20.8)
   15 FORMAT (1H0,3X,35HGCL3 AND GCL4 MUST BE > 0. FOR KO =I4)
   30 FORMAT(1H03X,3HSW1,8X,2HS5,8X,2HR3/8F10.4)
   39 FORMAT(1H03X,4HKO =I5,F10.6)
   53 FORMAT(1H02X,38HS3 OR S4 INPUTS ARE NOT VALID FOR KO =I4)
   54 FORMAT(1H02X,4HKO =I5,2X,65HS3 AND S4 MUST BE 0. FOR THIS CASE TO
     1BE VALID.  USE KO-1 CASE.  )
 2001 FORMAT(1H02X,82H N100,N101,N110,N112 HAVE BEEN SET TO ZERO BECAUSE
     1THE MIN(ET1/R1,ET2/R2) WAS LE 5.)
 2002 FORMAT (1H02X,77H N100,N101,N102,N110 HAVE BEEN SET TO ZERO BECAUS
     1E THE MIN(W1/R1,W2/R2) LE 5.)
 2003 FORMAT (1H02X,57H N100,N102 HAVE BEEN SET TO ZERO BECAUSE SW2/S5
     1IS LE 3.)
 2004 FORMAT(1H02X,105H N102,N112 HAVE BEEN SET TO ZERO BECAUSE EITHER
     1THE MIN(ET1/B1,ET2/B2) OR THE MIN(W1/B1,W2/B2) WAS LE 5.)
 2005 FORMAT(1H02X,78H RATIO OF SW1/S5 LT 3. BUT GT. 0. GIVES TOO GREAT
     1AN ERROR FOR X100,X101,X102.)
      R3 = SQRT(R1*R2)
      R32 = R3 * R3
      S5 = SQRT(S3*S4)
      IF(S5.EQ.0.) S5 = .1
      S52 = S5 * S5
      SW2 = SQRT(ET1*ET2)
      SW1 = SQRT(W1*W2)
      SW5 = SW2/S5
      WS14 = SW1/S5
      IF(WS14.EQ.0.) GO TO 1001
      IF(WS14.GE.3.) GO TO 1001
      IF(N100.EQ.1) GO TO 1002
      IF(N101.EQ.1) GO TO 1002
      IF(N102.NE.1) GO TO 1001
 1002 SN100 = N100
      SN101 = N101
      SN102 = N102
      N100 = 0
      N101 = 0
      N102 = 0
      WRITE (6,2005)
 1001 SW12= SW1*SW1
      SW22= SW2*SW2
      WRITE (6,30)SW1,S5,R3
      SSR = SP*SPI*R1
      SRR = SP*R1*R2
      S4BB = SP*4.*B1*B2
      SWSW = SW22-SW12
 3002 ER1 = ET1/R1
      ER2 = ET2/R2
      ETB1= ET1/B1
      ETB2 = ET2/B2
      WR1 = W1/R1
      WR2 = W2/R2
      WB1 = W1/B1
      WB2 = W2/B2
      ER  = AMIN1(ER1,ER2)
      WR  = AMIN1(WR1,WR2)
      EB  = AMIN1(ETB1,ETB2)
      WB  = AMIN1(WB1,WB2)
      IF(S3.EQ.0.) GO TO 3000
      IF(S4.EQ.0.) GO TO 3000
```

```
      WS1 = W1/S3
      WS2 = W2/S4
      ES1 = ET1/S3
      ES2 = ET2/S4
      GO TO 3001
 3000 ES1 = 0.
      ES2 = 0.
      WS1 = 0.
      WS2 = 0.
 3001 IF(ER.GT.5.) GO TO 3086
      IF(N100.EQ.1) GO TO 3006
      IF(N101.EQ.1) GO TO 3006
      IF(N110.NE.1) GO TO 3086
 3006 SN100 = N100
      SN101 = N101
      SN110 = N110
      N100 = 0
      N101 = 0
      N110 = 0
      WRITE (6,2001)
 3086 IF(WR.GT.5.) GO TO 3087
      IF(WR.EQ.0.) GO TO 3087
      IF(SW1.EQ.0.) GO TO 3087
      IF(N100.EQ.1) GO TO 3007
      IF(N101.EQ.1) GO TO 3007
      IF(N102.EQ.1) GO TO 3007
      IF(N110.NE.1) GO TO 3087
 3007 SN100 = N100
      SN101  = N101
      SN102  = N102
      SN110  = N110
      N100 = 0
      N101 = 0
      N102 = 0
      N110 = 0
      WRITE (6,2002)
 3087 IF(SW5.GT.3.) GO TO 3088
      IF(N100.EQ.1) GO TO 3008
      IF(N102.NE.1) GO TO 3088
 3008 SN100 = N100
      SN102  = N102
      N100 = 0
      N102 = 0
      WRITE (6,2003)
 3088 IF(N102.EQ.1)GO TO 3090
      IF(N112.NE.1) GO TO 3192
 3090 IF(EB.LE.5.) GO TO 3089
      IF(WB.GT.5.) GO TO 3192
      IF(SW1.EQ.0.) GO TO 3192
 3089 SN102  = N102
      SN112  = N112
      N102 = 0
      N112 = 0
      WRITE (6,2004)
 3192 IF(N100.EQ.0) GO TO 3265
      KO = 100
      C45 = (1.-(1.-SP*R32/SWSW)**NB) * R
 5210 IF(SW1.EQ.0.) GO TO 4531
      SW3  = SQRT(-1.+SW12/S52)
```

```
      GO TO 4532
 4531 SW3  = 0.
 4532 SW4  = SQRT(-1.+SW22/S52)
      IF(T1.EQ..00000001) GO TO 4533
      GSE1 = (AJMX + ET1 + 4.*S3)/TU1
      GSE2 = (BJMX + ET2 + 4.*S4)/TU2
      SE12 = AMIN1(SE3,GSE1)*.5
      SE22 = AMIN1(SE4,GSE2)*.5
 4533 IF(SW1.EQ.0.) KO = 1001
      IF(N100.EQ.0) GO TO 5211
      CALL A50
      X100 = Z
      WRITE (6,39) KO,X100
 3265 IF(N102.EQ.0) GO TO 3270
      KO = 102
      C45 = R*(1.-(1.-S4BB/(PI*SWSW))**NB)
      IF(N100.EQ.0) GO TO 5210
 5211 IF(SW1.EQ.0.) KO = 1021
      CALL A50
      X102 = Z
      WRITE (6,39) KO,X102
 3270 IF(N101.EQ.0) GO TO 333
      IF(T1.EQ..00000001) GO TO 4534
      GSE1 = (AJMX + ET1 + 4.*AL1)/TU1
      GSE2 = (BJMX + ET2 + 4.*AL2)/TU2
      SE12 = AMIN1(SE3,GSE1)*.5
      SE22 = AMIN1(SE4,GSE2)*.5
 4534 KO = 101
      IF(S3.GT.0.) GO TO 4620
      IF(S4.GT.0.) GO TO 4620
      C45 = (SP*R32)/SWSW
      AL12 = AL1*AL2
      IF(SW1.EQ.0.) GO TO 4615
      SW3 = SQRT(SW12/AL12-1.)
      GO TO 4616
 4615 KO = 1011
      SW3 = 0.
 4616 SW4 = SQRT(SW22/AL12-1.)
      CALL A50
      X101 = Z
      WRITE (6,39) KO,X101
      GO TO 333
 4620 WRITE (6,53) KO
  333 FCL3 = SQRT(GCL3*GCL3 + 3.*RD1)
      FCL4 = SQRT(GCL4*GCL4 + 3.*RD2)
      IF(N103.EQ.0) GO TO 337
      IF(T1.EQ..00000001) GO TO 4535
      GSE1 = (AJMX + FCL3 + 4.*S3)/TU1
      GSE2 = (BJMX + FCL4 + 4.*S4)/TU2
      SE12 = AMIN1(SE3,GSE1)*.5
      SE22 = AMIN1(SE4,GSE2)*.5
 4535 KO = 103
      C45 = R*(1.-(1.-SPR/(4.*FCL3*FCL4))**NB)
      CALL A50
      X103 = Z
      WRITE (6,39) KO,X103
  337 IF(N104.EQ.0) GO TO 338
      IF(T1.EQ..00000001) GO TO 4536
      GSE1 = (AJMX + GCL3 + 4.*AL1)/TU1
```

```
      GSE2 = (BJMX + GCL4 + 4.*AL2)/TU2
      SE12 = AMIN1(SE3,GSE1)*.5
      SE22 = AMIN1(SE4,GSE2)*.5
 4536 KO = 104
      IF(S3.GT.0.) GO TO 3371
      IF(S4.GT.0.) GO TO 3371
      IF(GCL3.EQ.0.) GO TO 3372
      C45 = SPR/(4.*GCL3*GCL4)
      CALL A50
      X104 = Z
      WRITE (6,39) KO,X104
      GO TO 338
 3371 WRITE (6,54) KO
      GO TO 338
 3372 WRITE(6,15) KO
  338 FCL3 = SQRT(GCL3*GCL3 + B1*B1)
      FCL4 = SQRT(GCL4*GCL4 + B2*B2)
      IF(N105.EQ.0) GO TO 339
      IF(T1.EQ..00000001) GO TO 4537
      GSE1 = (AJMX + FCL3 + 4.*S3)/TU1
      GSE2 = (BJMX + FCL4 + 4.*S4)/TU2
      SE12 = AMIN1(SE3,GSE1)*.5
      SE22 = AMIN1(SE4,GSE2)*.5
 4537 KO = 105
      C45 = R*(1.-(1.-(SP *B1*B2)/(FCL3*FCL4))**NB)
      CALL A50
      X105 = Z
      WRITE (6,39) KO,X105
  339 IF(N106.EQ.0) GO TO 341
      IF(T1.EQ..00000001) GO TO 4538
      GSE1 = (AJMX + GCL3 + B1)/TU1
      GSE2 = (BJMX + GCL4 + B2)/TU2
      SE12 = AMIN1(SE3,GSE1)*.5
      SE22 = AMIN1(SE4,GSE2)*.5
 4538 KO = 106
      IF(S3.GT.0.) GO TO 3391
      IF(S4.GT.0.) GO TO 3391
      IF(GCL3.EQ.0.) GO TO 3392
      CALL A50
      X106 = Z
      WRITE (6,39) KO,X106
      GO TO 341
 3391 WRITE (6,54) KO
      GO TO 341
 3392 WRITE(6,15) KO
  341 IF(N107.EQ.0) GO TO 342
      IF(T1.EQ..00000001) GO TO 4539
      GSE1 = (AJMX + ET1 + 4.*S3)/TU1
      GSE2 = (BJMX + ET2 + 4.*S4)/TU2
      SE12 = AMIN1(SE3,GSE1)*.5
      SE22 = AMIN1(SE4,GSE2)*.5
 4539 KO = 107
      IF(S3.EQ.0.) GO TO 3421
      IF(S4.EQ.0.) GO TO 3421
      C45 = R*(1.-(1.-SRR/SW22)**NB)
      CALL A50
      X107 = Z
      WRITE (6,39) KO,X107
      GO TO 342
```

```
3421 WRITE (6,53) KO
 342 IF(N108.EQ.0) GO TO 343
     IF(T1.EQ..00000001) GO TO 4540
     GSE1 = (AJMX + ET1 + 4.*AL1)/TU1
     GSE2 = (BJMX + ET2 + 4.*AL2)/TU2
     SE12 = AMIN1(SE3,GSE1)*.5
     SE22 = AMIN1(SE4,GSE2)*.5
4540 KO = 108
     IF(S3.GT.0.) GO TO 3451
     IF(S4.GT.0.) GO TO 3451
     C45 = SRR/SW22
     CALL A50
     X108 = Z
     WRITE (6,39) KO,X108
     GO TO 343
3451 WRITE (6,53)KO
 343 IF(N109.EQ.0) GO TO 3271
     IF(T1.EQ..00000001) GO TO 4541
     GSE1 = (AJMX + ET1 + 4.*S3)/TU1
     GSE2 = (BJMX + ET2 + 4.*S4)/TU2
     SE12 = AMIN1(SE3,GSE1)*.5
     SE22 = AMIN1(SE4,GSE2)*.5
4541 KO = 109
     IF(S3.EQ.0.) GO TO 3431
     IF(S4.EQ.0.) GO TO 3431
     C45 = R*(1.-(1.-S4BB/(SW22*PI))**NB)
     CALL A50
     X109 = Z
     WRITE (6,39) KO,X109
     GO TO 3271
3431 WRITE (6,53) KO
3271 IF(N110.EQ.0) GO TO 3273
     IF(T1.EQ..00000001) GO TO 4542
     GSE1 = (AJMX + ET1 + 4.*S3)/TU1
     GSE2 = (BJMX + ET2 + 4.*S4)/TU2
     SE12 = AMIN1(SE3,GSE1)*.5
     SE22 = AMIN1(SE4,GSE2)*.5
4542 KO = 110
     IF(S3.EQ.0.) GO TO 3272
     IF(S4.EQ.0.) GO TO 3272
     C45 = R*(1.-(1.-SRR/SWSW)**NB)
     CALL A50
     X110 = Z
     WRITE (6,39) KO,X110
     GO TO 3273
3272 WRITE (6,53) KO
3273 IF(N111.EQ.0) GO TO 3275
     IF(T1.EQ..00000001) GO TO 4543
     GSE1 = (AJMX + ET1 + 4.*AL1)/TU1
     GSE2 = (BJMX + ET2 + 4.*AL2)/TU2
     SE12 = AMIN1(SE3,GSE1)*.5
     SE22 = AMIN1(SE4,GSE2)*.5
4543 KO = 111
     IF(S3.GT.0.) GO TO 3274
     IF(S4.GT.0.) GO TO 3274
     C45 = SRR/SWSW
     CALL A50
     X111 = Z
     WRITE (6,39) KO,X111
```

```
      GO TO 3275
 3274 WRITE (6,53) KO
 3275 IF(N112.EQ.0) GO TO 332
      IF(T1.EQ..00000001) GO TO 4544
      GSE1 = (AJMX + ET1 + 4.*S3)/TU1
      GSE2 = (BJMX + ET2 + 4.*S4)/TU2
      SE12 = AMIN1(SE3,GSE1)*.5
      SE22 = AMIN1(SE4,GSE2)*.5
 4544 KO = 112
      IF(S3.EQ.0.) GO TO 3276
      IF(S4.EQ.0.) GO TO 3276
      C45 = R*(1.-(1.-S4BB/(PI*SWSW))**NB)
      CALL A50
      X112 = Z
      WRITE (6,39) KO,X112
      GO TO 332
 3276 WRITE (6,53) KO
  332 RETURN
      END


      SUBROUTINE A50
      REAL SS(150)/150*0.0/
      DIMENSION DATA(1200)
      DIMENSION A22(200),B22(200)
      COMMON DATA
      COMMON SE4,SE3,U3,U4,Z,SQ1,SQ2,Q1,Q2,CL2,PI,SPI,SQ3,C,CL3,AT1,AT2
      COMMON BS1,BS2,SE12,SE22,S5,C45,SW3,SW4,ST1,SU3,SU4,AL1,AL2,SW1
      COMMON FCL3,FCL4,ES1,ES2,ER1,ER2,ETB1,ETB2,WR1,WR2,WB1,WB2,WS1,WS2
      COMMON A22,B22,A1,A2,B1,B2
      COMMON SQR2,SPI2,PI2,AJMX,BJMX,TU1,TU2,T12,T22
      COMMON R32,RD1,RD2,SPR,SW12,SW22,SRR
      COMMON SN100,SN101,SN102,SN110,SN112,X112
      COMMON X100,X101,X102,X103,X104,X105,X106,X107,X108,X109,X110,X111
      COMMON N100,N101,N102,N110,N112,INUM
      COMMON KK,KOUT,KOO,KO,X11,LU3,LU4,N,NB,LU5
      EQUIVALENCE (DATA(33),A111),(DATA(34),A112),(DATA(35),D),(DATA(36)
     1 ,DF),(DATA(37),SP),(DATA(38),AJJ),(DATA(39),A3),(DATA(40),A4),
     2 (DATA(41),B3),(DATA(42),B4),(DATA(43),S1),(DATA(44),S2),(DATA(45)
     3 ,S3),(DATA(46),S4),(DATA(47),T1),(DATA(48),T2),(DATA(49),SU1),
     4 (DATA(50),SU2),(DATA(51),U1),(DATA(52),U2),(DATA(53),CL1),
     5 (DATA(54),Q0),(DATA(55),R1),(DATA(56),R2),(DATA(57),D1),(DATA(58)
     6 ,D2),(DATA(59),R),(DATA(60),W1),(DATA(61),W2),(DATA(62),ET1),
     7 (DATA(63),ET2),(DATA(64),GCL3),(DATA(65),GCL4)
    1 FORMAT (1H02X,3HSE1,7X,3HSE2/2F10.8)
      IF(T1.EQ..00000001) GO TO 5057
  505 ZSUM = 0.
      DO 51 J = 1,LU3
      AJ = J
      SSUM = 0.
      X = FXJ(AJ)
      DO 512 K = 1,LU4
      AK = K
      Y  = FYJ(AK)
      CALL K6(X,Y,PK6)
      CALL FF(Y,SE22,AT2,1.,AF)
      SSUM = SSUM + PK6 * AF
  512 CONTINUE
   53 SS(J) = SSUM
```

```
      CALL FF(X,SE12,AT1,1.,AF)
      ZSUM = ZSUM + SS(J)*AF
   51 CONTINUE
 5057 IF(T1.GT..00000001) GO TO 5055
      SE1 = A1/U1
      SE12 = SE1*.5
      SE2 = A2/U2
      SE22 = SE2*.5
      ZSUM = 0.
      DO 5100 J = 1,LU3
      AJ = J
      SSUM = 0.
      X = FXJ(AJ)
      DO 5200 K = 1,LU4
      AK = K
      Y = FYJ(AK)
      CALL K6(X,Y,PK6)
      SSUM = SSUM + PK6
 5200 CONTINUE
      SS(J) = SSUM/U4
      ZSUM = ZSUM + SS(J)
 5100 CONTINUE
      Z = ZSUM/U3
      GO TO 507
 5055 Z = ZSUM
      IF(SU3.EQ.0.) Z = 2.*Z
      IF(SU4.EQ.0.) GO TO 506
      GO TO 507
  506 Z = 2.* Z
  507 RETURN
      END


      SUBROUTINE PP(X,J,PXJ)
      DIMENSION DATA(1200)
      DIMENSION A22(200),B22(200)
      COMMON DATA
      COMMON SE4,SE3,U3,U4,Z,SQ1,SQ2,Q1,Q2,CL2,PI,SPI,SQ3,C,CL3,AT1,AT2
      COMMON BS1,BS2,SE12,SE22,S5,C45,SW3,SW4,ST1,SU3,SU4,AL1,AL2,SW1
      COMMON FCL3,FCL4,ES1,ES2,ER1,ER2,ETB1,ETB2,WR1,WR2,WB1,WB2,WS1,WS2
      COMMON A22,B22,A1,A2,B1,B2
      COMMON SQR2,SPI2,PI2,AJMX,BJMX,TU1,TU2,T12,T22
      COMMON R32,RD1,RD2,SPR,SW12,SW22,SRR
      COMMON SN100,SN101,SN102,SN110,SN112,X112
      COMMON X100,X101,X102,X103,X104,X105,X106,X107,X108,X109,X110,X111
      COMMON N100,N101,N102,N110,N112,INUM
      COMMON KK,KOUT,KOO,KO,K11,LU3,LU4,N,NB,LU5
      EQUIVALENCE (DATA(43),S1),(DATA(44),S2),(DATA(55),R1),(DATA(56),R2
     1)
      PXJ = 0.
      IF(KOUT.EQ.1) GO TO 1
      IF(J.EQ.2) GO TO 5
      SQ7 = 7.*SQ1
      IF(X.GT.SQ7) GO TO 100
      PXJ = R1/SQ1*EXP(-(X/SQ1)**2*.5)/SQR2
      GO TO 100
    5 SQ8 = 7.*SQ2
      IF(X.GT.SQ8) GO TO 100
    2 PXJ = R2/SQ2*EXP(-(X/SQ2)**2*.5)/SQR2
```

```
      GO TO 100
    1 IF(J.EQ.2) GO TO 3
      CALL SF(X,B1,S1,SMF)
      PXJ = SMF
      GO TO 100
    3 CALL SF(X,B2,S2,SMF)
      PXJ = SMF
  100 RETURN
      END


      SUBROUTINE XRO(X1,X2,X3,X4,X5,SD3,SD4)
      DIMENSION DATA(1200)
      DIMENSION A(200),B(200),A22(200),B22(200)
      DIMENSION I(200),ISTOP(200),LSTOP(200),KSTOP(200)
      COMMON DATA
      COMMON SE4,SE3,U3,U4,Z,SQ1,SQ2,Q1,Q2,CL2,PI,SPI,SQ3,C,CL3,AT1,AT2
      COMMON BS1,BS2,SE12,SE22,S5,C45,SW3,SW4,ST1,SU3,SU4,AL1,AL2,SW1
      COMMON FCL3,FCL4,ES1,ES2,ER1,ER2,ETB1,ETB2,WR1,WR2,WB1,WB2,WS1,WS2
      COMMON A22,B22,A1,A2,B1,B2
      COMMON SQR2,SPI2,PI2,AJMX,BJMX,TU1,TU2,T12,T22
      COMMON R32,RD1,RD2,SPR,SW12,SW22,SRR
      COMMON SN100,SN101,SN102,SN110,SN112,X112
      COMMON X100,X101,X102,X103,X104,X105,X106,X107,X108,X109,X110,X111
      COMMON N100,N101,N102,N110,N112,INUM
      COMMON KK,KOUT,KOD,KO,K11,LU3,LU4,N,NB,LU5
      EQUIVALENCE (DATA(1),PRO),(DATA(2),CN),(DATA(3),CNB),(DATA(4),CNVI
     1 ),(DATA(5),CXAJ),(DATA(6),CXBJ),(DATA(7),CNPT),(DATA(8),CNCP),
     2 (DATA(9),FIMP),(DATA(10),ANNO),(DATA(11),AN1),(DATA(12),AN2),
     3 (DATA(13),AN3),(DATA(14),AN4),(DATA(15),AN5)
      EQUIVALENCE (DATA(33),A111),(DATA(34),A112),(DATA(35),D),(DATA(36)
     1 ,DF),(DATA(37),SP),(DATA(38),AJJ),(DATA(39),A3),(DATA(40),A4),
     2 (DATA(41),B3),(DATA(42),B4),(DATA(43),S1),(DATA(44),S2),(DATA(45)
     3 ,S3),(DATA(46),S4),(DATA(47),T1),(DATA(48),T2),(DATA(49),SU1),
     4 (DATA(50),SU2),(DATA(51),U1),(DATA(52),U2),(DATA(53),CL1),
     5 (DATA(54),Q0),(DATA(55),R1),(DATA(56),R2),(DATA(57),D1),(DATA(58)
     6 ,D2),(DATA(59),R)
      EQUIVALENCE (DATA(101),A),(DATA(301),B)
      N1   = AN1 + .000001
      N2   = AN2 + .000001
      N3   = AN3 + .000001
      N4   = AN4 + .000001
      N5   = AN5 + .000001
      AU1 = ABS(SU1)
      AU2 = ABS(SU2)
      CN1 = CN - 1.
      NK1 = N - 1
      DO 1 J = 1,N
      I(J) = 0
      ISTOP(J) = 0
      LSTOP(J) = 0
      KSTOP(J) = 0
    1 CONTINUE
      IF(N1.NE.0) GO TO 2
      IF(N5.EQ.0) GO TO 362
    2 DO 390 KK = 1,N
      IF(N.GT.12) GO TO 392
      ONEG = 1.
      LOT = 0
```

```
      KA = KK-1
      FKK= KK
      WX1 = 0.
      W5 = 0.
      IF(MOD(KA,2))1321,1322,1321
 1321 ONEG = -ONEG
 1322 KOO = 2
      IF(T1.EQ..00000001) GO TO 1324
      GSE2 = (AU2+B2+4.*S2)/TU2
      SE22 = AMIN1(SE4,GSE2)*.5
 1324 CALL A41
 1430 W7 = Z
  344 Q2 = SQRT(SQ2**2/FKK+T22)
      Q1 = SQRT(SQ1**2/FKK+T12)
      CALL V(2,SU2,VXJ)
      W6 = VXJ
  350 IF(N5.NE.0) GO TO 510
      LOT = 1
  352 IF(N1.EQ.0) GO TO 388
  410 IF(SD3.NE.0.) GO TO 425
  162 CALL V(1,SU1,VXJ)
      WX1= VXJ*YF(KK)
      O = WX1 * W6
      GO TO 385
  510 IF(SD3.NE.0.) GO TO 520
 1820 K11 = 3
      CALL A40
  184 W5 = Z
      O  = W5*W7
      GO TO 383
  520 CONTINUE
  425 DO 426 J = 1,KK
      KSTOP(J) = N-KK+J
      IF(J.NE.1) GO TO 105
      I(J) = J
      LSTOP(J) = KSTOP(J)
      GO TO 106
  105 I(J) = I(J-1) + 1
      LSTOP(J) = I(1)+NK1-KK+J
  106 ISTOP(J) = MINO(KSTOP(J),LSTOP(J))
  426 CONTINUE
      IF(LOT.EQ.1) GO TO 429
      IF(N5.NE.0)GO TO 192
  429 CALL F(I,ABAR,ASQ,BBAR,BSQ)
      UMA = SU1 - ABAR
      AAM = ASQ - ABAR**2
      SQ11=  2.*SQ1*SQ1
      CALL  V(1,UMA,VXJ)
      Z   = VXJ * EXP(-FKK * AAM/SQ11)
  175 WX1 = WX1+ Z * SP**KK
      GO TO 1107
  192 ZSUM = 0.
 4026 DO 193 IJ = 1,LU3
      AIJ = IJ
      AI  = FXJ(AIJ)
      CALL PKX(I,AI,PO)
      APO = PO
      CALL FF(AI,SE12,AT1,1.,AF)
      ZSUM = ZSUM + APO*AF
```

```
 193 CONTINUE
     Z = ZSUM * SP**KK
     IF(SU1.NE.0.) GO TO 195
     Z = 2.* Z
 195 W5 = W5 + Z
1107 IS = KK
     GO TO 101
 104 IS = IS + 1
     ISS = IS - 1
     I(IS) = I(ISS) + 1
     IF(IS-KK) 107,108,107
 107 LSTOP(IS+1) = I(1) + NK1 - KK +IS +1
     ISTOP(IS+1) = MINO(KSTOP(IS+1),LSTOP(IS+1))
 108 GO TO 102
 101 I(IS) = I(IS) + 1
     IF(IS - KK) 109,102,109
 109 LSTOP(IS+1) = I(1) + NK1 - KK + IS + 1
     ISTOP(IS+1) = MINO(KSTOP(IS+1),LSTOP(IS+1))
 102 IF(I(IS).GT.ISTOP(IS)) GO TO 103
     IF(IS.NE.KK) GO TO 104
     IF(LOT.EQ.1) GO TO 428
     IF(N5.NE.0)GO TO 427
 428 CALL F(I,ABAR,ASQ,BBAR,BSQ)
     UMA = SU1 - ABAR
     AAM = ASQ - ABAR**2
     SQ11=  2.*SQ1*SQ1
     CALL  V(1,UMA,VXJ)
     Z   = VXJ * EXP(-FKK*AAM/SQ11)
     WX1 = WX1+ Z*SP**KK
     GO TO 101
 427 ZSUM = 0.
4276 DO 194 IJ = 1,LU3
     AIJ = IJ
     AI  = FXJ(AIJ)
     CALL PKX(I,AI,PO)
     APO = PO
     CALL FF(AI,SE12,AT1,1.,AF)
     ZSUM = ZSUM + APO*AF
 194 CONTINUE
     Z = ZSUM * SP**KK
     IF(SU3.NE.0.) GO TO 191
     Z = 2. * Z
 191 W5 = W5 + Z
     GO TO 101
 103 IS = IS-1
     IF(IS.EQ.0) GO TO 382
     IF(I(IS).EQ.ISTOP(IS)) GO TO 103
     GO TO 101
 382 IF(LOT-1)383,385,385
 383 X5 = X5 + ONEG*W5*W7
     O = W5*W7
     LOT = 1
     GO TO 352
 385 X1 = X1 + ONEG*WX1*W6
     O = WX1*W6
 388 IF(O.LE..0001) GO TO 362
 390 CONTINUE
 362 IF(N.GT.1) GO TO 392
     IF(NB.GT.30) GO TO 392
```

```
      IF(NB.EQ.0) GO TO 392
      KOUT = 1000
      N4SV = 0
      N3SV = 0
      N2SV = 0
      DO 400 KK = 1,NB
      IF(N4.NE.0) GO TO 404
      IF(N3.NE.0) GO TO 404
      IF(N2.EQ.0) GO TO 405
  404 FKK = KK
      Q2 = SQRT(SQ2**2/FKK+T22)
      Q1 = SQRT(SQ1**2/FKK+T12)
      KA = KK-1
      ONEG = 1.
      IF(MOD(KA,2)) 401,402,401
  401 ONEG = -ONEG
  402 IF(B2.EQ.0.) GO TO 403
      IF(N4.EQ.0) GO TO 403
      KOO = 2
      IF(T1.EQ..00000001) GO TO 1325
      GSE2 = (AU2+B2+4.*S2)/TU2
      SE22 = AMIN1(SE4,GSE2)*.5
 1325 CALL A41
      W7 = Z
  403 CALL V(2,SU2,VXJ)
      W6 = VXJ
      IF(N4.NE.0) GO TO 1320
  347 IF(N3.NE.0) GO TO 1215
  348 IF(N2.NE.0) GO TO 1120
      GO TO 400
 1320 K11 = 2
       IF(T1.EQ..00000001) GO TO 1323
      GSE1 = (AU1+CL1+B1+4.*Q0)/TU1
      SE12 = AMIN1(SE3,GSE1)*.5
 1323 CALL A40
      W4 = Z
      X4 = X4 + ONEG*W4*W7
      O  = W4 * W7
      IF(O.GT..0001) GO TO 347
      N4SV = N4
      N4 = 0
      GO TO 347
 1215 CL3 = SQRT(CL1**2 + 3.* SQ3**2)
      W31=(SPI2 *R1/CL3)**KK
      CALL FF(SU1,CL3,A1,T1,AF)
      W3  = W31 * AF * YF(KK)
      X3  =  X3 + ONEG * W3*W6
      O  = W3 * W6
      IF(O.GT..0001) GO TO 348
      N3SV = N3
      N3 = 0
      GO TO 348
 1120 K11 = 1
      IF(T1.EQ..00000001) GO TO 1121
       GSE1 = (AU1+CL1+4.*SQ3)/TU1
      SE12 = AMIN1(SE3,GSE1)*.5
 1121 CALL A40
      WX2 = Z
      X2 = X2 + ONEG * WX2 * W6
```

```
      O = WX2 * W6
      IF(O.GT..0001) GO TO 400
      N2SV = N2
      N2 = 0
  400 CONTINUE
  405 IF(N4SV.NE.0) N4 = N4SV
      IF(N3SV.NE.0) N3 = N3SV
      IF(N2SV.NE.0) N2 = N2SV
  392 RETURN
      END


      SUBROUTINE A41
      DIMENSION DATA(1200)
      DIMENSION A22(200),B22(200)
      COMMON DATA
      COMMON SE4,SE3,U3,U4,Z,SQ1,SQ2,Q1,Q2,CL2,PI,SPI,SQ3,C,CL3,AT1,AT2
      COMMON BS1,BS2,SE12,SE22,S5,C45,SW3,SW4,ST1,SU3,SU4,AL1,AL2,SW1
      COMMON FCL3,FCL4,ES1,ES2,ER1,ER2,ETB1,ETB2,WR1,WR2,WB1,WB2,WS1,WS2
      COMMON A22,B22,A1,A2,B1,B2
      COMMON SQR2,SPI2,PI2,AJMX,BJMX,TU1,TU2,T12,T22
      COMMON R32,RD1,RD2,SPR,SW12,SW22,SRR
      COMMON SN100,SN101,SN102,SN110,SN112,X112
      COMMON X100,X101,X102,X103,X104,X105,X106,X107,X108,X109,X110,X111
      COMMON N100,N101,N102,N110,N112,INUM
      COMMON KK,KOUT,KOO,KO,K11,LU3,LU4,N,NB,LU5
      EQUIVALENCE (DATA(52),U2)
      ZSUM = 0.
    6 DO 4 J = 1,LU4
      AJ = J
      YJ = FYJ(AJ)
      CALL KY(YJ,ZKY)
      ZK1 = ZKY
      CALL FF(YJ,SE22,AT2,1.,AF)
      ZSUM = ZSUM + ZK1*AF
    4 CONTINUE
      Z = 2.* ZSUM
      IF(SU4.EQ.0.) GO TO 100
      Z = Z * .5
  100 RETURN
      END


      SUBROUTINE V(J,X,VXJ)
      DIMENSION DATA(1200)
      DIMENSION A22(200),B22(200)
      COMMON DATA
      COMMON SE4,SE3,U3,U4,Z,SQ1,SQ2,Q1,Q2,CL2,PI,SPI,SQ3,C,CL3,AT1,AT2
      COMMON BS1,BS2,SE12,SE22,S5,C45,SW3,SW4,ST1,SU3,SU4,AL1,AL2,SW1
      COMMON FCL3,FCL4,ES1,ES2,ER1,ER2,ETB1,ETB2,WR1,WR2,WB1,WB2,WS1,WS2
      COMMON A22,B22,A1,A2,B1,B2
      COMMON SQR2,SPI2,PI2,AJMX,BJMX,TU1,TU2,T12,T22
      COMMON R32,RD1,RD2,SPR,SW12,SW22,SRR
      COMMON SN100,SN101,SN102,SN110,SN112,X112
      COMMON X100,X101,X102,X103,X104,X105,X106,X107,X108,X109,X110,X111
      COMMON N100,N101,N102,N110,N112,INUM
      COMMON KK,KOUT,KOO,KO,K11,LU3,LU4,N,NB,LU5
      EQUIVALENCE  (DATA(55),R1),(DATA(56),R2)
      VXJ = 0.
```

```
      AKK = KK
      P2OK = SQRT(2.*PI/AKK)
      IF(J.EQ.2) GO TO 2
      RP =(R1/(SQ1*SQR2))**KK * P2OK * SQ1/Q1
      AXQ = X/Q1
      AQ1 = A1/Q1
      CALL HS(AXQ,AQ1,SH)
      VXJ = RP * SH
      GO TO 1
    2 AXQ = X/Q2
      AQ2 = A2/Q2
      CALL HS(AXQ,AQ2,SH)
      VXJ =(R2/(SQ2*SQR2))**KK * P2OK * SQ2/Q2 * SH
    1 RETURN
      END


      FUNCTION SMG(XX)
      DIMENSION DATA(1200)
      DIMENSION A22(200),B22(200)
      COMMON DATA
      COMMON SE4,SE3,U3,U4,Z,SQ1,SQ2,Q1,Q2,CL2,PI,SPI,SQ3,C,CL3,AT1,AT2
      COMMON BS1,BS2,SE12,SE22,S5,C45,SW3,SW4,ST1,SU3,SU4,AL1,AL2,SW1
      COMMON FCL3,FCL4,ES1,ES2,ER1,ER2,ETB1,ETB2,WR1,WR2,WB1,WB2,WS1,WS2
      COMMON A22,B22,A1,A2,B1,B2
      COMMON SQR2,SPI2,PI2,AJMX,BJMX,TU1,TU2,T12,T22
      COMMON R32,RD1,RD2,SPR,SW12,SW22,SRR
      COMMON SN100,SN101,SN102,SN110,SN112,X112
      COMMON X100,X101,X102,X103,X104,X105,X106,X107,X108,X109,X110,X111
      COMMON N100,N101,N102,N110,N112,INUM
      COMMON KK,KOUT,KOO,KO,K11,LU3,LU4,N,NB,LU5
      SMG = EXP(-XX*XX*.5)/SQRT(PI2)
    1 RETURN
      END


      FUNCTION YF(KKK)
      DIMENSION DATA(1200)
      DIMENSION A22(200),B22(200)
      COMMON DATA
      COMMON SE4,SE3,U3,U4,Z,SQ1,SQ2,Q1,Q2,CL2,PI,SPI,SQ3,C,CL3,AT1,AT2
      COMMON BS1,BS2,SE12,SE22,S5,C45,SW3,SW4,ST1,SU3,SU4,AL1,AL2,SW1
      COMMON FCL3,FCL4,ES1,ES2,ER1,ER2,ETB1,ETB2,WR1,WR2,WB1,WB2,WS1,WS2
      COMMON A22,B22,A1,A2,B1,B2
      COMMON SQR2,SPI2,PI2,AJMX,BJMX,TU1,TU2,T12,T22
      COMMON R32,RD1,RD2,SPR,SW12,SW22,SRR
      COMMON SN100,SN101,SN102,SN110,SN112,X112
      COMMON X100,X101,X102,X103,X104,X105,X106,X107,X108,X109,X110,X111
      COMMON N100,N101,N102,N110,N112,INUM
      COMMON KK,KOUT,KOO,KO,K11,LU3,LU4,N,NB,LU5
      EQUIVALENCE (DATA(37),SP)
      ANO = N
      IF(KOUT.EQ.1000) ANO = NB
      YF = 1.
      DO 1 J = 1,KKK
      AJ = J
      YF=YF * (ANO-AJ+1.)/AJ * SP
    1 CONTINUE
    2 RETURN
```

```
      END

      FUNCTION FXJ(XX)
      DIMENSION DATA(1200)
      DIMENSION A22(200),B22(200)
      COMMON DATA
      COMMON SE4,SE3,U3,U4,Z,SQ1,SQ2,Q1,Q2,CL2,PI,SPI,SQ3,C,CL3,AT1,AT2
      COMMON BS1,BS2,SE12,SE22,S5,C45,SW3,SW4,ST1,SU3,SU4,AL1,AL2,SW1
      COMMON FCL3,FCL4,ES1,ES2,ER1,ER2,ETB1,ETB2,WR1,WR2,WB1,WB2,WS1,WS2
      COMMON A22,B22,A1,A2,B1,B2
      COMMON SQR2,SPI2,PI2,AJMX,BJMX,TU1,TU2,T12,T22
      COMMON R32,RD1,RD2,SPR,SW12,SW22,SRR
      COMMON SN100,SN101,SN102,SN110,SN112,X112
      COMMON X100,X101,X102,X103,X104,X105,X106,X107,X108,X109,X110,X111
      COMMON N100,N101,N102,N110,N112,INUM
      COMMON KK,KOUT,KOO,KO,K11,LU3,LU4,N,NB,LU5
      EQUIVALENCE (DATA(51),U1)
      IF(XX.NE.0.) GO TO 2
      FXJ = 0.
      GO TO 3
    2 IF(SU3.NE.0.) GO TO 4
      FXJ = (2.*XX-1.) * SE12
      GO TO 3
    4 FXJ = (2.*XX-1.-2.*U1) * SE12
    3 RETURN
      END

      FUNCTION FYJ(XX)
      DIMENSION DATA(1200)
      DIMENSION A22(200),B22(200)
      COMMON DATA
      COMMON SE4,SE3,U3,U4,Z,SQ1,SQ2,Q1,Q2,CL2,PI,SPI,SQ3,C,CL3,AT1,AT2
      COMMON BS1,BS2,SE12,SE22,S5,C45,SW3,SW4,ST1,SU3,SU4,AL1,AL2,SW1
      COMMON FCL3,FCL4,ES1,ES2,ER1,ER2,ETB1,ETB2,WR1,WR2,WB1,WB2,WS1,WS2
      COMMON A22,B22,A1,A2,B1,B2
      COMMON SQR2,SPI2,PI2,AJMX,BJMX,TU1,TU2,T12,T22
      COMMON R32,RD1,RD2,SPR,SW12,SW22,SRR
      COMMON SN100,SN101,SN102,SN110,SN112,X112
      COMMON X100,X101,X102,X103,X104,X105,X106,X107,X108,X109,X110,X111
      COMMON N100,N101,N102,N110,N112,INUM
      COMMON KK,KOUT,KOO,KO,K11,LU3,LU4,N,NB,LU5
      EQUIVALENCE (DATA(52),U2)
      IF(XX.NE.0.) GO TO 2
      FYJ = 0.
      GO TO 3
    2 IF(SU4.NE.0.) GO TO 4
      FYJ = (2.*XX-1.) * SE22
      GO TO 3
    4 FYJ = (2.*XX-1.-2.*U2) * SE22
    3 RETURN
      END

      SUBROUTINE A40
      DIMENSION DATA(1200)
      DIMENSION A22(200),B22(200)
      COMMON DATA
```

```
      COMMON SE4,SE3,U3,U4,Z,SQ1,SQ2,Q1,Q2,CL2,PI,SPI,SQ3,C,CL3,AT1,AT2
      COMMON BS1,BS2,SE12,SE22,S5,C45,SW3,SW4,ST1,SU3,SU4,AL1,AL2,SW1
      COMMON FCL3,FCL4,ES1,ES2,ER1,ER2,ETB1,ETB2,WR1,WR2,WB1,WB2,WS1,WS2
      COMMON A22,B22,A1,A2,B1,B2
      COMMON SQR2,SPI2,PI2,AJMX,BJMX,TU1,TU2,T12,T22
      COMMON R32,RD1,RD2,SPR,SW12,SW22,SRR
      COMMON SN100,SN101,SN102,SN110,SN112,X112
      COMMON X100,X101,X102,X103,X104,X105,X106,X107,X108,X109,X110,X111
      COMMON N100,N101,N102,N110,N112,INUM
      COMMON KK,KOUT,KOO,KO,K11,LU3,LU4,N,NB,LU5
      EQUIVALENCE (DATA(51),U1)
      ASUM = 0.
    6 DO 4 J = 1,LU3
      AJ = J
      XJ = FXJ(AJ)
      CALL KX(XJ,ZKX)
      ZK1 = ZKX
      CALL FF(XJ,SE12,AT1,1.,AF)
      ASUM = ASUM + ZK1*AF
    4 CONTINUE
      Z = 2.*ASUM*YF(KK)
      IF(SU3.EQ.0.) GO TO 100
      Z = Z * .5
  100 RETURN
      END


      SUBROUTINE KX(ZA,ZKX)
      DIMENSION DATA(1200)
      DIMENSION A22(200),B22(200)
      COMMON DATA
      COMMON SE4,SE3,U3,U4,Z,SQ1,SQ2,Q1,Q2,CL2,PI,SPI,SQ3,C,CL3,AT1,AT2
      COMMON BS1,BS2,SE12,SE22,S5,C45,SW3,SW4,ST1,SU3,SU4,AL1,AL2,SW1
      COMMON FCL3,FCL4,ES1,ES2,ER1,ER2,ETB1,ETB2,WR1,WR2,WB1,WB2,WS1,WS2
      COMMON A22,B22,A1,A2,B1,B2
      COMMON SQR2,SPI2,PI2,AJMX,BJMX,TU1,TU2,T12,T22
      COMMON R32,RD1,RD2,SPR,SW12,SW22,SRR
      COMMON SN100,SN101,SN102,SN110,SN112,X112
      COMMON X100,X101,X102,X103,X104,X105,X106,X107,X108,X109,X110,X111
      COMMON N100,N101,N102,N110,N112,INUM
      COMMON KK,KOUT,KOO,KO,K11,LU3,LU4,N,NB,LU5
      EQUIVALENCE (DATA(43),S1),(DATA(47),T1),(DATA(49),SU1),(DATA(53),C
     1L1),(DATA(54),Q0),(DATA(55),R1),(DATA(56),R2)
      ZKX = 0.
      IF(K11.EQ.1) GO TO 1
      IF(K11.EQ.2) GO TO 2
      IF(K11.EQ.3) GO TO 3
    1 XTS =(ZA * T1 + SU1)/SQ3
      CLS = CL1/SQ3
      CALL HS(XTS,CLS,SH)
      ZKX =(SH * SPI * R1/SQ3)**KK
      GO TO 100
    2 XT  = (ZA*T1+SU1)
      CALL FF(XT,B1,CL1,Q0,AF)
      ZKX = AF ** KK
      GO TO 100
    3 XT  =(ZA*T1+SU1)
      CALL SF(XT,B1,S1,SMF)
      ZKX = SMF**KK
```

```
100 RETURN
    END

    SUBROUTINE KY(ZZ,ZKY)
    DIMENSION DATA(1200)
    DIMENSION A(200),B(200),A22(200),B22(200)
    COMMON DATA
    COMMON SE4,SE3,U3,U4,Z,SQ1,SQ2,Q1,Q2,CL2,PI,SPI,SQ3,C,CL3,AT1,AT2
    COMMON BS1,BS2,SE12,SE22,S5,C45,SW3,SW4,ST1,SU3,SU4,AL1,AL2,SW1
    COMMON FCL3,FCL4,ES1,ES2,ER1,ER2,ETB1,ETB2,WR1,WR2,WB1,WB2,WS1,WS2
    COMMON A22,B22,A1,A2,B1,B2
    COMMON SQR2,SPI2,PI2,AJMX,BJMX,TU1,TU2,T12,T22
    COMMON R32,RD1,RD2,SPR,SW12,SW22,SRR
    COMMON SN100,SN101,SN102,SN110,SN112,X112
    COMMON X100,X101,X102,X103,X104,X105,X106,X107,X108,X109,X110,X111
    COMMON N100,N101,N102,N110,N112,INUM
    COMMON KK,KOUT,KOO,KO,K11,LU3,LU4,N,NB,LU5
    EQUIVALENCE  (DATA(44),S2),(DATA(47),T1),(DATA(48),T2),(DATA(49),S
   1U1),(DATA(50),SU2)
    EQUIVALENCE (DATA(101),A),(DATA(301),B)
    ZKY = 0.
    IF(KOO.EQ.1) GO TO 1
    IF(KOO.EQ.2) GO TO 2
  1 ZKK = 1.
    DO 3 J = 1,N
    AJS = SU1 - A(J)
    CALL FF(AJS,CL3,A1,T1,AF)
    ZAF = AF
    YTB = ZZ * T2 - B(J) + SU2
    CALL PP(YTB,Z,PXJ)
    ZKK = ZKK * (1. -   (1.-(1.-C*PXJ)**NB))
  3 CONTINUE
    ZKY = (1. - ZKK) * ZAF
    GO TO 100
  2 YTS = ZZ*T2+SU2
    CALL SF(YTS,B2,S2,SMF)
    ZKY = SMF**KK
100 RETURN
    END

    SUBROUTINE F(I,ABAR,ASQ,BBAR,BSQ)
    DIMENSION DATA(1200),I(200)
    DIMENSION A(200),B(200),A22(200),B22(200)
    COMMON DATA
    COMMON SE4,SE3,U3,U4,Z,SQ1,SQ2,Q1,Q2,CL2,PI,SPI,SQ3,C,CL3,AT1,AT2
    COMMON BS1,BS2,SE12,SE22,S5,C45,SW3,SW4,ST1,SU3,SU4,AL1,AL2,SW1
    COMMON FCL3,FCL4,ES1,ES2,ER1,ER2,ETB1,ETB2,WR1,WR2,WB1,WB2,WS1,WS2
    COMMON A22,B22,A1,A2,B1,B2
    COMMON SQR2,SPI2,PI2,AJMX,BJMX,TU1,TU2,T12,T22
    COMMON R32,RD1,RD2,SPR,SW12,SW22,SRR
    COMMON SN100,SN101,SN102,SN110,SN112,X112
    COMMON X100,X101,X102,X103,X104,X105,X106,X107,X108,X109,X110,X111
    COMMON N100,N101,N102,N110,N112,INUM
    COMMON KK,KOUT,KOO,KO,K11,LU3,LU4,N,NB,LU5
    EQUIVALENCE (DATA(101),A),(DATA(301),B)
    AK = KK
    ABAR = 0.
```

```
      ASQ = 0.
      BBAR = 0.
      BSQ = 0.
      DO 1 J = 1,KK
      M1 = I(J)
      ABAR = ABAR + A(M1)/AK
      ASQ  = ASQ +A22(M1)/AK
      BBAR = BBAR + B(M1)/AK
      BSQ = BSQ +B22(M1)/AK
    1 CONTINUE
      RETURN
      END


      SUBROUTINE PKX(I,AIJ,PO)
      DIMENSION DATA(1200),I(200)
      DIMENSION A(200),B(200),A22(200),B22(200)
      COMMON DATA
      COMMON SE4,SE3,U3,U4,Z,SQ1,SQ2,Q1,Q2,CL2,PI,SPI,SQ3,C,CL3,AT1,AT2
      COMMON BS1,BS2,SE12,SE22,S5,C45,SW3,SW4,ST1,SU3,SU4,AL1,AL2,SW1
      COMMON FCL3,FCL4,ES1,ES2,ER1,ER2,ETB1,ETB2,WR1,WR2,WB1,WB2,WS1,WS2
      COMMON A22,B22,A1,A2,B1,B2
      COMMON SQR2,SPI2,PI2,AJMX,BJMX,TU1,TU2,T12,T22
      COMMON R32,RD1,RD2,SPR,SW12,SW22,SRR
      COMMON SN100,SN101,SN102,SN110,SN112,X112
      COMMON X100,X101,X102,X103,X104,X105,X106,X107,X108,X109,X110,X111
      COMMON N100,N101,N102,N110,N112,INUM
      COMMON KK,KOUT,KOO,KO,K11,LU3,LU4,N,NB,LU5
      EQUIVALENCE (DATA(43),S1),(DATA(47),T1),(DATA(49),SU1)
      EQUIVALENCE (DATA(101),A),(DATA(301),B)
      PO = 1.
      DO 1 J = 1,KK
      M1 = I(J)
      SFX = (AIJ*T1+SU1-A(M1))
      CALL SF(SFX,B1,S1,SMF)
      PO = PO * SMF
    1 CONTINUE
      RETURN
      END


      SUBROUTINE K6(XX,YY,PK6)
      REAL XUA(200)/200*0.0/,YUB(200)/200*0.0/
      DIMENSION DATA(1200)
      DIMENSION A(200),B(200),A22(200),B22(200)
      COMMON DATA
      COMMON SE4,SE3,U3,U4,Z,SQ1,SQ2,Q1,Q2,CL2,PI,SPI,SQ3,C,CL3,AT1,AT2
      COMMON BS1,BS2,SE12,SE22,S5,C45,SW3,SW4,ST1,SU3,SU4,AL1,AL2,SW1
      COMMON FCL3,FCL4,ES1,ES2,ER1,ER2,ETB1,ETB2,WR1,WR2,WB1,WB2,WS1,WS2
      COMMON A22,B22,A1,A2,B1,B2
      COMMON SQR2,SPI2,PI2,AJMX,BJMX,TU1,TU2,T12,T22
      COMMON R32,RD1,RD2,SPR,SW12,SW22,SRR
      COMMON SN100,SN101,SN102,SN110,SN112,X112
      COMMON X100,X101,X102,X103,X104,X105,X106,X107,X108,X109,X110,X111
      COMMON N100,N101,N102,N110,N112,INUM
      COMMON KK,KOUT,KOO,KO,K11,LU3,LU4,N,NB,LU5
      EQUIVALENCE (DATA(33),A111),(DATA(34),A112),(DATA(35),D),(DATA(36)
     1 ,DF),(DATA(37),SP),(DATA(38),AJJ),(DATA(39),A3),(DATA(40),A4),
     2 (DATA(41),B3),(DATA(42),B4),(DATA(43),S1),(DATA(44),S2),(DATA(45)
```

```
     3 ,S3),(DATA(46),S4),(DATA(47),T1),(DATA(48),T2),(DATA(49),SU1),
     4 (DATA(50),SU2),(DATA(51),U1),(DATA(52),U2),(DATA(53),CL1),
     5 (DATA(54),Q0),(DATA(55),R1),(DATA(56),R2),(DATA(57),D1),(DATA(58)
     6 ,D2),(DATA(59),R),(DATA(60),W1),(DATA(61),W2),(DATA(62),ET1),
     7 (DATA(63),ET2),(DATA(64),GCL3),(DATA(65),GCL4)
      EQUIVALENCE (DATA(101),A),(DATA(301),B)
      PK6  = 0.
      PKP  = 1.
      DO 500 J = 1,N
      IF(T1.EQ..00000001) GO TO 501
      XUA(J) = XX * T1 + SU1 - A(J)
      YUB(J) = YY * T2 + SU2 - B(J)
      GO TO 500
  501 XUA(J) = XX + SU1 - A(J)
      YUB(J) = YY + SU2 - B(J)
  500 CONTINUE
      IF(KO.EQ.11)GO TO 11
      IF(KO.EQ.12)GO TO 12
      IF(KO.EQ.14)GO TO 14
      IF(KO.EQ.15)GO TO 11
      IF(KO.EQ.100) GO TO 4
      IF(KO.EQ.1001) GO TO 5
      IF(KO.EQ.101) GO TO 101
      IF(XO.EQ.1011) GO TO 1011
      IF(KO.EQ.102) GO TO 4
      IF(KO.EQ.1021) GO TO 5
      IF(KO.EQ.103) GO TO 103
      IF(KO.EQ.104) GO TO 104
      IF(KO.EQ.105) GO TO 105
      IF(KO.EQ.106) GO TO 106
      IF(KO.EQ.107) GO TO 107
      IF(KO.EQ.108) GO TO 108
      IF(KO.EQ.109) GO TO 109
      IF(KO.EQ.110) GO TO 110
      IF(KO.EQ.111) GO TO 111
      IF(KO.EQ.112) GO TO 112
   11 DO 99 J = 1,N
      XTA = XUA(J)
      CALL PP(XTA,1,PXJ)
      PX1 = PXJ
      YTA = YUB(J)
      CALL PP(YTA,2,PXJ)
      PY1 = PXJ
      PKP = PKP * (1.-PX1*PY1*SP)
   99 CONTINUE
      GO TO 100
   12 HLS = CL1/SQ3
      DO 98 J = 1,N
      YTS = YUB(J)
      CALL PP(YTS,2,PXJ)
      PP1 = PXJ
      XTS = XUA(J)/SQ3
      CALL HS(XTS,HLS,SH)
      PKP = PKP*(1.-PP1*C*SH)**NB
   98 CONTINUE
      GO TO 100
   14 DO 97 J = 1,N
      XTS = XUA(J)
      CALL FF(XTS,B1,CL1,Q0,AF)
```

```
      TJX = SP * AF
      YTS = YUB(J)
      CALL PP(YTS,2,PXJ)
      PKP = PKP*(1.-TJX*PXJ)**NB
   97 CONTINUE
      GO TO 100
    4 DO 96 J = 1,N
      FJXY = SQRT(XUA(J)**2+YUB(J)**2)/S5
      X = FJXY - SW3
      Y = FJXY - SW4
      PKP = PKP * (1.- C45*(BIGG(X)-BIGG(Y)))
   96 CONTINUE
      GO TO 100
    5 DO 95 J = 1,N
      Y = SQRT(XUA(J)**2+YUB(J)**2)/S5 - SW4
      PKP = PKP * (1.-C45*(1.-BIGG(Y)))
   95 CONTINUE
      GO TO 100
  101 AL = SQRT(AL1*AL2)
      DO 86 J = 1,N
      FJXY = SQRT(XUA(J)**2+YUB(J)**2)/AL
      X = FJXY - SW3
      Y = FJXY - SW4
      PKP = PKP*(1.-R*(1.- (1.-C45*(BIGG(X)-BIGG(Y)))**NB))
   86 CONTINUE
      GO TO 100
 1011 AL = SQRT(AL1*AL2)
      DO 83 J = 1,N
      Y = SQRT(XUA(J)**2+YUB(J)**2)/AL -SW4
      PKP = PKP*(1.-R*(1.-(1.-C45*(1.-BIGG(Y)))**NB))
   83 CONTINUE
      GO TO 100
  103 DO 94 J = 1,N
      X = XUA(J)
      Y = YUB(J)
      CALL SF(X,FCL3,S3,SMF)
      SFA = SMF
      CALL SF(Y,FCL4,S4,SMF)
      PKP = PKP * (1.-C45*SFA*SMF)
   94 CONTINUE
      GO TO 100
  104 DO 93 J = 1,N
      X = XUA(J)
      Y = YUB(J)
      CALL SF(X,GCL3,AL1,SMF)
      SFA = SMF
      CALL SF(Y,GCL4,AL2,SMF)
      PKP = PKP*(1.-R*(1.-(1.-C45*SFA*SMF)**NB))
   93 CONTINUE
      GO TO 100
  105 DO 92 J = 1,N
      X = XUA(J)
      Y = YUB(J)
      CALL SF(X,FCL3,S3,SMF)
      SFA = SMF
      CALL SF(Y,FCL4,S4,SMF)
      PKP = PKP * (1.- C45*SFA*SMF)
   92 CONTINUE
      GO TO 100
```

```
106 DO 91 J = 1,N
    XTA = XUA(J)
    YTB = YUB(J)
    CALL FF(XTA,B1,GCL3,0.,AF)
    AF1 =AF
    CALL FF(YTB,B2,GCL4,0.,AF)
    PKP = PKP * (1.-R*(1.-(1.-SP*AF1*AF)**NB))
 91 CONTINUE
    GO TO 100
107 DO 90 J = 1,N
    XTS = XUA(J)/S3
    YTS = YUB(J)/S4
    CALL A113(ES1,ES2,XTS,YTS,P113)
    PKP =  PKP * (1.- C45*P113)
 90 CONTINUE
    GO TO 100
108 TA1 = ET1/AL1
    TA2 = ET2/AL2
    DO 89 J = 1,N
    XTA = XUA(J)/AL1
    YTB = YUB(J)/AL2
    CALL A113(TA1,TA2,XTA,YTB,P113)
    PKP = PKP*(1.-R*(1.-(1.-C45*P113)**NB))
 89 CONTINUE
    GO TO 100
109 DO 88 J = 1,N
    XTA = XUA(J)/S3
    YTB = YUB(J)/S4
    CALL A113(ES1,ES2,XTA,YTB,P113)
    PKP = PKP * (1. - C45*P113)
 88 CONTINUE
    GO TO 100
110 DO 87 J = 1,N
    XTA = XUA(J)/S3
    YTB = YUB(J)/S4
    CALL A113(ES1,ES2,XTA,YTB,P113)
    PA = P113
    CALL A113(WS1,WS2,XTA,YTB,P113)
    PKP = PKP* (1.-C45*(PA-P113))
 87 CONTINUE
    GO TO 100
111 TA1 = ET1/AL1
    TA2 = ET2/AL2
    WA1 = W1/AL1
    WA2 = W2/AL2
    DO 85 J = 1,N
    XTA = XUA(J)/AL1
    YTB = YUB(J)/AL2
    CALL A113(TA1,TA2,XTA,YTB,P113)
    PA = P113
    CALL A113(WA1,WA2,XTA,YTB,P113)
    PKP = PKP * (1.-R*(1.-(1.-C45*(PA-P113))**ND))
 85 CONTINUE
    GO TO 100
112 DO 84 J = 1,N
    XTA = XUA(J)/S3
    YTB = YUB(J)/S4
    CALL A113(ES1,ES2,XTA,YTB,P113)
    PA = P113
```

```
      CALL A113(WS1,WS2,XTA,YTB,P113)
      PKP = PKP * (1.- C45*(PA-P113))
   84 CONTINUE
  100 PK6 = 1.-PKP
      RETURN
      END


      SUBROUTINE A113(AZ,BZ,XX,YY,P113)
      DIMENSION DATA(1200)
      DIMENSION A22(200),B22(200)
      COMMON DATA
      COMMON SE4,SE3,U3,U4,Z,SQ1,SQ2,Q1,Q2,CL2,PI,SPI,SQ3,C,CL3,AT1,AT2
      COMMON BS1,BS2,SE12,SE22,S5,C45,SW3,SW4,ST1,SU3,SU4,AL1,AL2,SW1
      COMMON FCL3,FCL4,ES1,ES2,ER1,ER2,ETB1,ETB2,WR1,WR2,WB1,WB2,WS1,WS2
      COMMON A22,B22,A1,A2,B1,B2
      COMMON SQR2,SPI2,PI2,AJMX,BJMX,TU1,TU2,T12,T22
      COMMON R32,RD1,RD2,SPR,SW12,SW22,SRR
      COMMON SN100,SN101,SN102,SN110,SN112,X112
      COMMON X100,X101,X102,X103,X104,X105,X106,X107,X108,X109,X110,X111
      COMMON N100,N101,N102,N110,N112,INUM
      COMMON KK,KOUT,KOO,KO,K11,LU3,LU4,N,NB,LU5
      EQUIVALENCE  (DATA(66),UU5),(DATA(67),VV5)
      E5 = 2.*PI/UU5
      SK = VV5
      PSUM = 0.
    2 DO 5 J = 1,LU5
      IF(J.EQ.1) GO TO 1
      SK = SK + E5
    1 SSK  = SIN(SK)
      COSK = COS(SK)
      ZK   = BZ * XX * COSK + AZ * YY * SSK + AZ * BZ
      CK   =(AZ * COSK + XX)**2 + (BZ * SSK + YY)**2
      XYZJ = Z113(CK)
      PSUM = PSUM + ZK * XYZJ/UU5
    5 CONTINUE
   10 P113 = PSUM
      RETURN
      END


      FUNCTION BIGG(T)
      S2 = SQRT(2.)
      TA = T/S2
      BIGG = .5 * (1. +    ERF(TA))
    1 RETURN
      END


      SUBROUTINE DECRD(DATA)
C     DECIMAL CARD READ SUBROUTINE
C     MAIN PROGRAM MUST CONTAIN A DIMENSION STATEMENT AND CORRESPONDING
C     EQUIVALENT STATEMENT.
C     ARRAY DATA MUST BE FIRST ENTRY IN BLANK COMMON IN PROGRAM.
      DIMENSION DRBU(5), DATA(1), I1(5)
    9 READ (5,10) (I1(I),I=1,5),I1STL,(DRBU(J),J=1,5)
      J = IABS(I1STL)
      DO 30 I=1,5
      IF (I1(I).NE.0)   GO TO 30
```

```
 20 DATA(J) = DRBU(I)
 30 J = J+1
    IF (I1STL)   50,40,9
 40 WRITE (6,900) (I1(I),I=1,5),I1STL,(DRBU(J),J=1,5)
    CALL EXIT
 50 RETURN
 10 FORMAT (5I1,I7,5F12.11)
900 FORMAT (1H1,86H***ADDRESS PORTION OF IP CARD = ZERO. RUN TERMINAT
   1ED. CARD IN ERROR PRINTED BELOW.***/1H0,5I1,I7,5F12.11)
    END


    SUBROUTINE FF(OX,OY,OL,S,AF)
    AF = 0.
    XPY = OX + OY
    XMY = OX - OY
    OL2 = 2.* OL
    CALL EE(XPY,OL,S,EEE)
    E1 = EEE
    CALL EE(XMY,OL,S,EEE)
    E2 = EEE
    AF = E1-E2
    RETURN
    END


    SUBROUTINE H(YX,YL,HXL)
    HXL = 0.
    IF(YL.EQ.0.) GO TO 1
    XPL = YX + YL
    XML = YX - YL
    HXL = (XPL*BIGG(XPL)-XML*BIGG(XML)+SMG(XPL)-SMG(XML))/(2.*YL)
    GO TO 2
  1 HXL = BIGG(YX)
  2 RETURN
    END


    SUBROUTINE EE(X,CL,S,EEE)
    IF(S.EQ.0.) GO TO 1
    XS = X/S
    SL = CL/S
    CALL   H(XS,SL,HXL)
    EEE= HXL
    GO TO 5
  1 AL = -CL
    IF(X.LT.AL) GO TO 2
    IF(X.GE.CL) GO TO 3
    EEE= (X+CL)/(2.*CL)
    GO TO 5
  2 EEE= 0.
    GO TO 5
  3 EEE= 1.
  5 RETURN
    END


    SUBROUTINE  SF(OX,OY,S,SMF)
    IF(S.EQ.0.) GO TO 1
```

```
      XPY =(OX + OY)/S
      XMY =(OX-OY)/S
      SMF = BIGG(XPY)-BIGG(XMY)
      GO TO 5
    1 IF(ABS(OX).LE.OY) GO TO 2
      SMF = 0.
      GO TO 5
    2 SMF = 1.
    5 RETURN
      END


      SUBROUTINE HS(OX,OL,SH)
      IF(OL.EQ.0.) GO TO 1
      CALL SF(OX,OL,1.,SMF)
      SH = SMF/(2.*OL)
      GO TO 2
    1 SH = SMG(OX)
    2 RETURN
      END


      FUNCTION Z113(SO)
      IF(SO.LE..001) GO TO 1
      Z113 = (1.-EXP(-SO/2.))/SO
      GO TO 2
    1 Z113 = .5 - SO/8. + SO**2/48.
    2 RETURN
      END
```

5.8. TEST CASES FOR A RIPPLE OF BOMBS AND FOR A RIPPLE OF FIXED DISPENSERS

Test Case 1

1	23	1	1	0	0	2	0				
NO	N1	N2	N3	N4	N5	N10	N11	N12	N13	N14	N15
1	0	0	0	0	0	0	1	0	0	0	0

D	DF	SP	N	NB	NVI	NN4
40.00	20.00	0.95	24	1	0	3

A3	A4	B3	B4	S1	S2	S3	S4
400.0000	200.0000	1.0000	1.0000	30.0000	20.0000	0.0	0.0
T1	T2	SU1	SU2	U1	U2	L1	QO
150.0000	100.0000	0.0	0.0	8.0000	8.0000	0.0	0.0
R1	R2	D1	D2	R	W1	W2	
15.0000	30.0000	1.0000	1.0000	0.0	0.0	0.0	
ET1	ET2	GCL3	GCL4	UU5	VV5		
0.0	0.0	0.0	0.0	40.0000	0.0		

A(J)

-60.0000	-60.0000	-60.0000	-60.0000	-60.0000	-60.0000	-20.0000	-20.0000
-20.0000	-20.0000	-20.0000	-20.0000	20.0000	20.0000	20.0000	20.0000
20.0000	20.0000	60.0000	60.0000	60.0000	60.0000	60.0000	60.0000

B(J)

-20.0000	-0.0000	20.0000	-20.0000	-0.0000	20.0000	-20.0000	-0.0000
20.0000	-20.0000	-0.0000	20.0000	-20.0000	-0.0000	20.0000	-20.0000
-0.0000	20.0000	-20.0000	-0.0000	20.0000	-20.0000	-0.0000	20.0000

KO = 11 0.122739

X(10)	X(11)	X(12)	X(13)	X(14)	X(15)	X(30)
0.0	0.122739	0.0	0.0	0.0	0.0	0.0
X(100)	X(101)	X(102)	X(103)	X(104)	X(105)	X(106)
0.0	0.0	0.0	0.0	0.0	0.0	0.0
X(107)	X(108)	X(109)	X(110)	X(111)	X(112)	
0.0	0.0	0.0	0.0	0.0	0.0	

$X(11)$ is the expected fraction damage to an area target from a ripple of $N(1)$ bombs, each subject to a gaussian ballistic error and the whole ripple subject to a gaussian aiming error. The area is rectangular and oriented along and perpendicular to the line of flight. The major damage is fragmentation. $X(11)$ uses $R1$ and $R2$ entries and $B3=B4=1$.

Test Case 2

```
          2        23    1    1    0    0    2    0

 NO   N1   N2   N3   N4   N5  N10  N11  N12  N13  N14  N15
  1    0    0    0    0    0    0    0    0    0    0    1

     D        DF        SP         N         NB        NV1       NN4
   40.00    20.00      0.95        24         1          0         3

   A3        A4        B3        B4        S1        S2        S3        S4
400.0000  200.0000  20.0000   20.0000   30.0000   20.0000    0.0       0.0

   T1        T2        SU1       SU2       U1        U2        L1        Q0
150.0000  100.0000    0.0       0.0      8.0000    8.0000    0.0       0.0

   R1        R2        D1        D2        R         W1        W2
  1.0000    1.0000    1.0000    1.0000    0.0       0.0       0.0

   ET1       ET2       GCL3      GCL4      UU5       VV5
  0.0       0.0       0.0       0.0      40.0000    0.0

  A(J)
-60.0000  -60.0000  -60.0000  -60.0000  -60.0000  -60.0000  -20.0000  -20.0000
-20.0000  -20.0000  -20.0000  -20.0000   20.0000   20.0000   20.0000   20.0000
 20.0000   20.0000   60.0000   60.0000   60.0000   60.0000   60.0000   60.0000

  B(J)
-20.0000   -0.0000   20.0000  -20.0000   -0.0000   20.0000  -20.0000   -0.0000
 20.0000  -20.0000   -0.0000   20.0000  -20.0000   -0.0000   20.0000  -20.0000
 -0.0000   20.0000  -20.0000   -0.0000   20.0000  -20.0000   -0.0000   20.0000

  KO =    15  0.048656

    X(10)     X(11)     X(12)     X(13)     X(14)     X(15)     X(30)

    0.0       0.0       0.0       0.0       0.0       0.048656  0.0

    X(100)    X(101)    X(102)    X(103)    X(104)    X(105)    X(106)

    0.0       0.0       0.0       0.0       0.0       0.0       0.0

    X(107)    X(108)    X(109)    X(110)    X(111)    X(112)

    0.0       0.0       0.0       0.0       0.0       0.0
```

$X(15)$ is the same method of delivery as $X(11)$ but the damage is based on impact (cookie-cutter damage function). $X(15)$ uses $B3$ and $B4$ entries and $R1=R2=1$.

Test Case 3

3	23	1	1	0	0	1	0				
NO	N1	N2	N3	N4	N5	N10	N11	N12	N13	N14	N15
0	1	0	0	0	0	0	0	0	0	0	0

D	DF	SP	N	NB	NVI	NN4
20.00	0.0	0.95	4	1	0	1

A3	A4	B3	B4	S1	S2	S3	S4
400.0000	200.0000	1.0000	1.0000	30.0000	20.0000	0.0	0.0

T1	T2	SU1	SU2	U1	U2	L1	QO
150.0000	100.0000	0.0	0.0	8.0000	8.0000	0.0	0.0

R1	R2	D1	D2	R	W1	W2
15.0000	30.0000	1.0000	1.0000	0.0	0.0	0.0

ET1	ET2	GCL3	GCL4	UU5	VV5
0.0	0.0	0.0	0.0	40.0000	0.0

A(J)			
-30.0000	-10.0000	10.0000	30.0000

ALL B(J) = 0.

X(1)	X(2)	X(3)	X(4)	X(5)
0.031374	0.0	0.0	0.0	0.0

X(10)	X(11)	X(12)	X(13)	X(14)	X(15)	X(30)
0.0	0.0	0.0	0.0	0.0	0.0	0.0

X(100)	X(101)	X(102)	X(103)	X(104)	X(105)	X(106)
0.0	0.0	0.0	0.0	0.0	0.0	0.0

X(107)	X(108)	X(109)	X(110)	X(111)	X(112)
0.0	0.0	0.0	0.0	0.0	0.0

$X(1)$ is the same as $X(11)$. The method of computation is different and is faster than $X(11)$ provided $N(1) \leq 12$. This restriction has been built in to the program.

Test Case 4

```
        4        23    1    1    0    0    1    0

NO   N1   N2   N3   N4   N5  N10  N11  N12  N13  N14  N15
 0    0    0    0    0    1    0    0    0    0    0    0

    D         DF         SP         N         NB        NVI       NN4
  20.00      0.0       0.95         4         1          0         1

   A3        A4        B3        B4        S1        S2        S3        S4
400.0000  200.0000  20.0000   20.0000   30.0000   20.0000   0.0       0.0

   T1        T2        SU1       SU2       U1        U2        L1        Q0
150.0000  100.0000   0.0       0.0       8.0000    8.0000    0.0       0.0

   R1        R2        D1        D2        R         W1        W2
  1.0000    1.0000    1.0000    1.0000    0.0       0.0       0.0

   ET1       ET2       GCL3      GCL4      UU5       VV5
  0.0       0.0       0.0       0.0       40.0000   0.0

  A(J)
-30.0000  -10.0000   10.0000   30.0000

  ALL B(J) = 0.

    X(1)      X(2)      X(3)      X(4)      X(5)

    0.0       0.0       0.0       0.0       0.009736

    X(10)     X(11)     X(12)     X(13)     X(14)     X(15)     X(30)

    0.0       0.0       0.0       0.0       0.0       0.0       0.0

    X(100)    X(101)    X(102)    X(103)    X(104)    X(105)    X(106)

    0.0       0.0       0.0       0.0       0.0       0.0       0.0

    X(107)    X(108)    X(109)    X(110)    X(111)    X(112)

    0.0       0.0       0.0       0.0       0.0       0.0
```

$X(5)$ is the same as $X(15)$. It should be restricted to $N(1) \leq 4$.

Test Case 5

```
          5        23    1    1    1    0    1    0

NO   N1   N2   N3   N4   N5  N10  N11  N12  N13  N14  N15
 1    0    0    0    0    0    0    0    1    0    0    0

    D         DF         SP          N          NB         NVI        NN4
   0.0       30.00      0.95         2         100         15          1

   A3         A4         B3         B4         S1         S2         S3         S4
800.0000   200.0000    1.0000     1.0000     1.0000    20.0000     0.0        0.0

   T1         T2         SU1        SU2        U1         U2         L1         Q0
150.0000   100.0000    0.0        0.0        8.0000     8.0000     1.0000     0.0

   R1         R2         D1         D2         R          W1         W2
  7.5000    15.0000     1.0000     1.0000     0.0        0.0        0.0

   ET1        ET2        GCL3       GCL4       UU5        VV5
  0.0        0.0        0.0        0.0       40.0000     0.0

    SVI(J)
  0.0       100.0000  200.0000  300.0000  400.0000  500.0000  600.0000  700.0000
800.0000    900.0000 1000.0000 1100.0000 1200.0000 1300.0000 1400.0000

    BPI(J)
  0.0       0.0200    0.0400    0.0600    0.0800    0.1000    0.1000    0.1000
  0.1000    0.1000    0.1000    0.0800    0.0600    0.0400    0.0200

  ALL A(J) = 0.

  B(J)
  0.0       0.0

  KO =    12  0.141609

    X(10)     X(11)     X(12)     X(13)     X(14)     X(15)     X(30)

    0.0       0.0       0.141609  0.0       0.0       0.0       0.0

    X(100)    X(101)    X(102)    X(103)    X(104)    X(105)    X(106)

    0.0       0.0       0.0       0.0       0.0       0.0       0.0

    X(107)    X(108)    X(109)    X(110)    X(111)    X(112)

    0.0       0.0       0.0       0.0       0.0       0.0
```

X(12) gives the expected fraction damage to an area target from a ripple of fixed dispensers, where the ballistic dispersion of the bomblets in range is given by a table. The deflection dispersion is gaussian, as is the aiming error. The major damage effect is fragmentation. *R1*, *R2*, *CL1*, *Q0*, *S2*, and *B3*=*B4*=1 are required inputs.

Test Case 6

```
          6         23    1    1    1    0    1    0

 N0   N1   N2   N3   N4   N5  N10  N11  N12  N13  N14  N15
  1    0    0    0    0    0    0    0    0    1    0    0

     D          DF          SP          N          NB         NVI        NN4
   0.0       30.00        0.95          2         100          15          1

   A3         A4         B3         B4         S1         S2         S3         S4
800.0000   200.0000    1.0000     1.0000     1.0000    20.0000     0.0        0.0

   T1         T2         SU1        SU2        U1         U2         L1         Q0
150.0000   100.0000    0.0        0.0        8.0000     8.0000     1.0000     0.0

   R1         R2         D1         D2         R          W1         W2
  7.5000    15.0000     1.0000     1.0000     0.0        0.0        0.0

   ET1        ET2        GCL3       GCL4       UU5        VV5
  0.0        0.0        0.0        0.0       40.0000     0.0

     SVI(J)
  0.0       100.0000  200.0000  300.0000  400.0000  500.0000  600.0000  700.0000
800.0000   900.0000 1000.0000 1100.0000 1200.0000 1300.0000 1400.0000

     BPI(J)
  0.0        0.0200    0.0400    0.0600    0.0800    0.1000    0.1000    0.1000
  0.1000     0.1000    0.1000    0.0800    0.0600    0.0400    0.0200

  ALL A(J) = 0.

  B(J)
  0.0        0.0

  KO =    13  0.139480

    X(10)      X(11)      X(12)      X(13)      X(14)      X(15)      X(30)

    0.0        0.0        0.0        0.139480   0.0        0.0        0.0

    X(100)     X(101)     X(102)     X(103)     X(104)     X(105)     X(106)

    0.0        0.0        0.0        0.0        0.0        0.0        0.0

    X(107)     X(108)     X(109)     X(110)     X(111)     X(112)

    0.0        0.0        0.0        0.0        0.0        0.0
```

$X(13)$ is an approximation to $X(12)$.

Test Case 7

```
        7        23    1    1    1    0    1    0

N0   N1   N2   N3   N4   N5  N10  N11  N12  N13  N14  N15
 1    0    0    0    0    0    0    0    0    0    1    0

    D         DF        SP         N         NB        NVI       NN4
  0.0      30.00      0.95         2        100         15         1

   A3        A4        B3        B4        S1        S2        S3        S4
800.0000  200.0000  15.0000   15.0000    1.0000   20.0000    0.0       0.0

   T1        T2        SU1       SU2       U1        U2        L1        Q0
150.0000  100.0000   0.0       0.0       8.0000    8.0000    1.0000    0.0

   R1        R2        D1        D2        R         W1        W2
 1.0000    1.0000    1.0000    1.0000    0.0       0.0       0.0

   ET1       ET2       GCL3      GCL4      UU5       VV5
  0.0       0.0       0.0       0.0      40.0000    0.0

    SVI(J)
  0.0      100.0000  200.0000  300.0000  400.0000  500.0000  600.0000  700.0000
800.0000  900.0000 1000.0000 1100.0000 1200.0000 1300.0000 1400.0000

    BPI(J)
  0.0       0.0200    0.0400    0.0600    0.0800    0.1000    0.1000    0.1000
  0.1000    0.1000    0.1000    0.0800    0.0600    0.0400    0.0200

  ALL A(J) = 0.

  B(J)
  0.0       0.0

  KO =    14  0.099638

    X(10)     X(11)     X(12)     X(13)     X(14)     X(15)     X(30)

    0.0       0.0       0.0       0.0       0.099638  0.0       0.0

    X(100)    X(101)    X(102)    X(103)    X(104)    X(105)    X(106)

    0.0       0.0       0.0       0.0       0.0       0.0       0.0

    X(107)    X(108)    X(109)    X(110)    X(111)    X(112)

    0.0       0.0       0.0       0.0       0.0       0.0
```

$X(14)$ is for the same type of delivery as $X(12)$ but the damage effect is based on impact (cookie-cutter damage function). Required inputs are $B3$, $B4$, and $R1=R2=1$.

Test Case 8

```
          8          23     1     1     1     0     1     0

 N0    N1    N2    N3    N4    N5   N10   N11   N12   N13   N14   N15
  0     0     1     0     0     0     0     0     0     0     0     0

     D          DF          SP          N          NB         NVI        NN4
   C.0        0.0        0.95          1          30          15          1

   A3         A4         B3         B4         S1         S2         S3         S4
900.0000   200.0000    1.0000     1.0000     1.0000    20.0000     0.0        0.0

   T1         T2         SU1        SU2        U1         U2         L1         Q0
150.0000   100.0000    0.0        0.0        8.0000     8.0000     1.0000     0.0

   R1         R2         D1         D2         R          W1         W2
  7.5000    15.0000     1.0000     1.0000     0.0        0.0        0.0

   ET1        ET2        GCL3       GCL4       UU5        VV5
  0.0        0.0        0.0        0.0       40.0000     0.0

     SVI(J)
  0.0      100.0000   200.0000   300.0000   400.0000   500.0000   600.0000   700.0000
800.0000   900.0000  1000.0000  1100.0000  1200.0000  1300.0000  1400.0000

     BPI(J)
  0.0        0.0200     0.0400     0.0600     0.0800     0.1000     0.1000     0.1000
  0.1000     0.1000     0.1000     0.0800     0.0600     0.0400     0.0200

  ALL A(J) = 0.

  ALL B(J) = 0.

    X(1)       X(2)       X(3)       X(4)       X(5)

    0.0        0.028578   0.0        0.0        0.0

    X(10)      X(11)      X(12)      X(13)      X(14)      X(15)      X(30)

    0.0        0.0        0.0        0.0        0.0        0.0        0.0

    X(100)     X(101)     X(102)     X(103)     X(104)     X(105)     X(106)

    0.0        0.0        0.0        0.0        0.0        0.0        0.0

    X(107)     X(108)     X(109)     X(110)     X(111)     X(112)

    0.0        0.0        0.0        0.0        0.0        0.0
```

$X(2)$ is the same as $X(12)$ except for the method of computation. It applies only to one dispenser and is valid for a small number of bomblets ($NB \leq 30$).

Test Case 9

```
        9        23    1    1    1    0    1    0

NO   N1   N2   N3   N4   N5  N10  N11  N12  N13  N14  N15
 0    0    0    1    0    0    0    0    0    0    0    0

    D        DF        SP         N         NB        NVI       NN4
  0.0       0.0       0.95        1         30         15         1

   A3        A4        B3        B4        S1        S2        S3        S4
800.0000  200.0000   1.0000    1.0000    1.0000   20.0000    0.0       0.0

   T1        T2       SU1       SU2        U1        U2        L1        QO
150.0000  100.0000   0.0       0.0       8.0000    6.0000    1.0000    0.0

   R1        R2        D1        D2         R        W1        W2
 7.5000   15.0000    1.0000    1.0000    0.0       0.0       0.0

   ET1       ET2      GCL3      GCL4       UU5       VV5
  0.0       0.0       0.0       0.0      40.0000    0.0

    SVI(J)
  0.0      100.0000  200.0000  300.0000  400.0000  500.0000  600.0000  700.0000
800.0000  900.0000 1000.0000 1100.0000 1200.0000 1300.0000 1400.0000

    BPI(J)
  0.0       0.0200    0.0400    0.0600    0.0800    0.1000    0.1000    0.1000
  0.1000    0.1000    0.1000    0.0800    0.0600    0.0400    0.0200

  ALL A(J) = 0.

  ALL B(J) = 0.

    X(1)      X(2)      X(3)      X(4)      X(5)

    0.0       0.0       0.027904  0.0       0.0

    X(10)     X(11)     X(12)     X(13)     X(14)     X(15)     X(30)

    0.0       0.0       0.0       0.0       0.0       0.0       0.0

    X(100)    X(101)    X(102)    X(103)    X(104)    X(105)    X(106)

    0.0       0.0       0.0       0.0       0.0       0.0       0.0

    X(107)    X(108)    X(109)    X(110)    X(111)    X(112)

    0.0       0.0       0.0       0.0       0.0       0.0
```

$X(3)$ is the same as $X(13)$ except for the method of computation. It applies only to one dispenser and is valid for a small number of bomblets ($NB \leq 30$).

Test Case 10

```
        10        23    1    1    1    0    1    0

NO   N1   N2   N3   N4   N5  N10  N11  N12  N13  N14  N15
 0    0    0    0    1    0    0    0    0    0    0    0

    D         DF         SP          N          NB         NVI        NN4
   0.0       0.0       0.95          1          30          15          1

   A3         A4         B3         B4         S1         S2         S3         S4
800.0000  200.0000   15.0000   15.0000    1.0000   20.0000    0.0        0.0

   T1         T2        SU1        SU2         U1         U2         L1         Q0
150.0000  100.0000    0.0        0.0        8.0000    8.0000    1.0000     0.0

   R1         R2         D1         D2         R         W1         W2
  1.0000     1.0000     1.0000     1.0000    0.0        0.0        0.0

   ET1        ET2       GCL3       GCL4       UU5        VV5
  0.0        0.0        0.0        0.0      40.0000     0.0

     SVI(J)
  0.0       100.0000  200.0000  300.0000  400.0000  500.0000  600.0000  700.0000
800.0000  900.0000 1000.0000 1100.0000 1200.0000 1300.0000 1400.0000

     BPI(J)
  0.0       0.0200    0.0400    0.0600    0.0800    0.1000    0.1000    0.1000
  0.1000    0.1000    0.1000    0.0800    0.0600    0.0400    0.0200

  ALL A(J) = 0.

  ALL B(J) = 0.

    X(1)      X(2)      X(3)      X(4)      X(5)

    0.0       0.0       0.0       0.018550  0.0

    X(10)     X(11)     X(12)     X(13)     X(14)     X(15)     X(30)

    0.0       0.0       0.0       0.0       0.0       0.0       0.0

    X(100)    X(101)    X(102)    X(103)    X(104)    X(105)    X(106)

    0.0       0.0       0.0       0.0       0.0       0.0       0.0

    X(107)    X(108)    X(109)    X(110)    X(111)    X(112)

    0.0       0.0       0.0       0.0       0.0       0.0
```

$X(4)$ is the same as $X(14)$ except for the method of computation. It applies only to one dispenser and is valid for a small number of bomblets ($NB \leq 30$).

5.9. TEST CASES FOR A RIPPLE OF DISPENSERS, RECTANGULAR BOMBLET PATTERN

The series $X(103)$ through $X(106)$ applies to ripples of dispensers released from the carrier, which provide a rectangular pattern of bomblet impact points. $X(103)$ applies to the case in which the majcr damage effect is frcm fragmentation, while $X(105)$ is for the cookie-cutter damage effect case. The ballistic dispersion is taken into account for these cases. If the MAE of an individual bomblet is appreciable (say, at least a tenth) of the total dispenser pattern area, the edge effects (effect of a bomblet outside the pattern area) become important. In these cases, $X(104)$ is used for the fragmentation case and $X(106)$ for the cookie-cutter case. In both the latter, the dispenser ballistic dispersion is ignored. $S1=S2=S3=S4=0$.

Test Case 11

```
        11          23     1     1     0     0     1     1

 NO N100 N101 N102 N103 N104 N105 N106 N107 N108 N109 N110 N111 N112
 1    0    0    0    1    0    0    0    0    0    0    0    0    0

    D          DF          SP          N          NB         NVI        NN4
   0.0        0.0        1.00          1         300          0          1

   A3         A4         B3         B4         S1         S2         S3         S4
320.0000   320.0000    1.0000     1.0000     0.0        0.0       50.0000    30.0000

   T1         T2         SU1        SU2        U1         U2         L1         Q0
200.0000   150.0000    0.0        0.0        8.0000     8.0000     0.0        0.0

   R1         R2         D1         D2         R          W1         W2
 7.5000    15.0000     1.0000     1.0000     0.9000     0.0        0.0

   ET1        ET2       GCL3       GCL4       UU5        VV5
 0.0        0.0       180.0000   150.0000   40.0000    0.0

 ALL A(J) = 0.

 ALL B(J) = 0.

 SW1        S5         R3
 0.0       38.7298    10.6066

 KO =   103  0.191514

   X(10)      X(11)      X(12)      X(13)      X(14)      X(15)      X(30)

   0.0        0.0        0.0        0.0        0.0        0.0        0.0

   X(100)     X(101)     X(102)     X(103)     X(104)     X(105)     X(106)

   0.0        0.0        0.0        0.191514   0.0        0.0        0.0

   X(107)     X(108)     X(109)     X(110)     X(111)     X(112)

   0.0        0.0        0.0        0.0        0.0        0.0
```

Test Case 12

```
        12          23     1     1     0     0     1     1

NG N100 N101 N102 N103 N104 N105 N106 N107 N108 N109 N110 N111 N112
1    0    0    0    0    0    1    0    0    0    0    0    0    0

    D          DF          SP          N          NB         NVI        NN4
   0.0        0.0        1.00          1         300          0          1

   A3         A4         B3         B4         S1         S2         S3         S4
320.0000   320.0000   10.0000    10.0000     0.0        0.0       50.0000    30.0000

   T1         T2         SU1        SU2        U1         U2         L1         Q0
200.0000   150.0000    0.0        0.0       8.0000     8.0000     0.0        0.0

   R1         R2         D1         D2         R          W1         W2
 1.0000     1.0000     1.0000     1.0000     0.9000     0.0        0.0

   ET1        ET2       GCL3       GCL4       UU5        VV5
  0.0        0.0      180.0000   150.0000   40.0000     0.0

  ALL A(J) = 0.

  ALL B(J) = 0.

  SW1        S5         R3
  0.0       38.7298    1.0000

  KO =  105  0.074095

    X(10)      X(11)      X(12)      X(13)      X(14)      X(15)      X(30)

    0.0        0.0        0.0        0.0        0.0        0.0        0.0

    X(100)     X(101)     X(102)     X(103)     X(104)     X(105)     X(106)

    0.0        0.0        0.0        0.0        0.0        0.074095   0.0

    X(107)     X(108)     X(109)     X(110)     X(111)     X(112)

    0.0        0.0        0.0        0.0        0.0        0.0
```

Test Case 13

```
        13          23    1    1    0    0    1    1

NO N100 N101 N102 N103 N104 N105 N106 N107 N108 N109 N110 N111 N112
1    0    0    0    0    1    0    0    0    0    0    0    0    0

    D          DF          SP          N          NB         NVI        NN4
   0.0        0.0        1.00          1          20          0          1

   A3         A4         B3         B4         S1         S2         S3         S4
320.0000   320.0000   1.0000     1.0000     0.0        0.0        0.0        0.0

   T1         T2         SU1        SU2        U1         U2         L1         QO
200.0000   150.0000   0.0        0.0        8.0000     8.0000     0.0        0.0

   R1         R2         D1         D2         R          W1         W2
30.0000    40.0000    1.0000     1.0000     0.9000     0.0        0.0

   ET1        ET2        GCL3       GCL4       UU5        VV5
 0.0        0.0      180.0000   150.0000   40.0000    0.0

 ALL A(J) = 0.

 ALL B(J) = 0.

 SW1        S5         R3
 0.0        0.1000     34.6410

 KO =  104  0.165298

   X(10)      X(11)      X(12)      X(13)      X(14)      X(15)      X(30)

   0.0        0.0        0.0        0.0        0.0        0.0        0.0

   X(100)     X(101)     X(102)     X(103)     X(104)     X(105)     X(106)

   0.0        0.0        0.0        0.0        0.165298   0.0        0.0

   X(107)     X(108)     X(109)     X(110)     X(111)     X(112)

   0.0        0.0        0.0        0.0        0.0        0.0
```

Test Case 14

14	23	1	1	0	0	1	1

NO	N100	N101	N102	N103	N104	N105	N106	N107	N108	N109	N110	N111	N112
1	0	0	0	0	0	0	1	0	0	0	0	0	0

D	DF	SP	N	NB	NVI	NN4
0.0	0.0	1.00	1	20	0	1

A3	A4	B3	B4	S1	S2	S3	S4
320.0000	320.0000	70.0000	70.0000	0.0	0.0	0.0	0.0

T1	T2	SU1	SU2	U1	U2	L1	Q0
200.0000	150.0000	0.0	0.0	8.0000	8.0000	0.0	0.0

R1	R2	D1	D2	R	W1	W2
1.0000	1.0000	1.0000	1.0000	0.9000	0.0	0.0

ET1	ET2	GCL3	GCL4	UU5	VV5
0.0	0.0	180.0000	150.0000	40.0000	0.0

ALL A(J) = 0.

ALL B(J) = 0.

SW1	S5	R3
0.0	0.1000	1.0000

KO = 106 0.199237

X(10)	X(11)	X(12)	X(13)	X(14)	X(15)	X(30)
0.0	0.0	0.0	0.0	0.0	0.0	0.0
X(100)	X(101)	X(102)	X(103)	X(104)	X(105)	X(106)
0.0	0.0	0.0	0.0	0.0	0.0	0.199237
X(107)	X(108)	X(109)	X(110)	X(111)	X(112)	
0.0	0.0	0.0	0.0	0.0	0.0	

5.10. TEST CASES FOR A RIPPLE OF DISPENSERS, ELLIPTIC BOMBLET PATTERN

$X(107)$ through $X(109)$ apply to ripples of dispensers released from the carrier, which provide an elliptic pattern of bomblet impact points. $X(107)$ applies to the case in which the major damage effect is fragmentation, while $X(109)$ applies to the cookie-cutter type damage effects. The ballistic dispersion is taken into account. If the MAE of an individual bomblet is appreciable compared with the total dispenser pattern area, the edge effects (effect of a bomblet outside the dispenser pattern area) become important. In this case, $X(108)$ is used for a fragmentation effect. For the cookie-cutter effect, one may use an equivalent rectangular pattern (equal area and ratio) in $X(106)$ above.

Test Case 15

```
        15        23    1    1    0    0    1    1

 NO N100 N101 N102 N103 N104 N105 N106 N107 N108 N109 N110 N111 N112
 1    0    0    0    0    0    0    0    1    0    0    0    0    0

    D        DF        SP        N        NB       NVI       NN4
 100.00     0.0       1.00       2       400        0         1

   A3       A4       B3       B4       S1       S2       S3       S4
320.0000 320.0000  1.0000   1.0000    0.0      0.0    50.0000  30.0000

   T1       T2       SU1      SU2      U1       U2       L1       QO
200.0000 150.0000   0.0      0.0    8.0000   8.0000    0.0      0.0

   R1       R2       D1       D2       R        W1       W2
 7.0000   14.0000   1.0000   1.0000   0.9000   0.0      0.0

   ET1      ET2      GCL3     GCL4     UU5      VV5
200.0000 150.0000   0.0      0.0    40.0000   0.0

 A(J)
-50.0000  50.0000

 ALL B(J) = 0.

 SW1      S5       R3
 0.0    36.7298   9.8995

 KO =  107  0.305239

   X(10)     X(11)     X(12)     X(13)     X(14)     X(15)     X(30)

   0.0       0.0       0.0       0.0       0.0       0.0       0.0

   X(100)    X(101)    X(102)    X(103)    X(104)    X(105)    X(106)

   0.0       0.0       0.0       0.0       0.0       0.0       0.0

   X(107)    X(108)    X(109)    X(110)    X(111)    X(112)

   0.305239  0.0       0.0       0.0       0.0       0.0
```

Test Case 16

```
        16        23    1    1    0    0    1    1

 NO N100 N101 N102 N103 N104 N105 N106 N107 N108 N109 N110 N111 N112
 1    0    0    0    0    0    0    0    0    1    0    0    0    0

    D        DF        SP        N        NB       NVI       NN4
 100.00     0.0      1.00        2       400        0         1

  A3       A4       B3       B4       S1       S2       S3       S4
320.0000 320.0000  1.0000   1.0000   0.0      0.0      0.0      0.0

  T1       T2       SU1      SU2      U1       U2       L1       QO
200.0000 150.0000  0.0      0.0      8.0000   8.0000   0.0      0.0

  R1       R2       D1       D2       R        W1       W2
 7.0000  14.0000   1.0000   1.0000   0.9000   0.0      0.0

  ET1      ET2      GCL3     GCL4     UU5      VV5
200.0000 150.0000  0.0      0.0     40.0000   0.0

 A(J)
-50.0000  50.0000

 ALL B(J) = 0.

 SW1      S5       R3
 0.0      0.1000   9.8995

 KO =  108  0.311146

   X(10)     X(11)     X(12)     X(13)     X(14)     X(15)     X(30)

   0.0       0.0       0.0       0.0       0.0       0.0       0.0

   X(100)    X(101)    X(102)    X(103)    X(104)    X(105)    X(106)

   0.0       0.0       0.0       0.0       0.0       0.0       0.0

   X(107)    X(108)    X(109)    X(110)    X(111)    X(112)

   0.0       0.311146  0.0       0.0       0.0       0.0
```

Test Case 17

```
        17          23     1     1     0     0     1     1

  NO N100 N101 N102 N103 N104 N105 N106 N107 N108 N109 N110 N111 N112
  1    0    0    0    0    0    0    0    0    0    1    0    0    0

     D          DF          SP          N          NB         NV1        NN4
  100.00       0.0        1.00          2         400          0          1

   A3         A4         B3         B4         S1         S2         S3         S4
320.0000   320.0000   10.0000    10.0000     0.0        0.0       50.0000    30.0000

   T1         T2         SU1        SU2        U1         U2         L1         QO
200.0000   150.0000     0.0        0.0       8.0000     8.0000     0.0        0.0

   R1         R2         D1         D2         R          W1         W2
  7.0000    14.0000     1.0000     1.0000    0.9000     0.0        0.0

   ET1        ET2        GCL3       GCL4       UU5        VV5
200.0000   150.0000     0.0        0.0       40.0000    0.0

  A(J)
-50.0000    50.0000

  ALL B(J) = 0.

  SW1        S5         R3
  0.0       38.7298    9.8995

  KO =  109  0.166712

    X(10)      X(11)      X(12)      X(13)      X(14)      X(15)      X(30)

    0.0        0.0        0.0        0.0        0.0        0.0        0.0

    X(100)     X(101)     X(102)     X(103)     X(104)     X(105)     X(106)

    0.0        0.0        0.0        0.0        0.0        0.0        0.0

    X(107)     X(108)     X(109)     X(110)     X(111)     X(112)

    0.0        0.0        0.166712   0.0        0.0        0.0
```

5.11. TEST CASES FOR A RIPPLE OF DISPENSERS, ELLIPTIC ANNULUS BOMBLET PATTERN

$X(110)$ through $X(112)$ are the same, respectively, as $X(107)$ through $X(109)$ except that the dispenser pattern is an elliptic annulus. $X(110)$ applies to the fragmentation case while $X(112)$ applies to the cookie-cutter case. $X(111)$ is the fragmentation case when the edge effects must be taken into account.

Test Case 18

```
        18        23    1    1    0    0    1    1

 NO N100 N101 N102 N103 N104 N105 N106 N107 N108 N109 N110 N111 N112
 1    0    0    0    0    0    0    0    0    0    0    0    0    1

    D         DF         SP         N         NB        NVI       NN4
 100.00      0.0        1.00        2        400         0         1

   A3        A4        B3        B4        S1        S2        S3        S4
320.0000  320.0000  10.0000   10.0000    0.0       0.0      50.0000   30.0000

   T1        T2        SU1       SU2       U1        U2        L1        Q0
200.0000  150.0000    0.0       0.0      8.0000    8.0000    0.0       0.0

   R1        R2        D1        D2        R         W1        W2
 7.0000   14.0000    .0000     1.0000    0.9000  100.0000   75.0000

   ET1       ET2       GCL3      GCL4      UU5       VV5
200.0000  150.0000    0.0       0.0      40.0000    0.0

  A(J)
-50.0000   50.0000

  ALL B(J) = 0.

  SW1       S5        R3
 86.6025   38.7298    9.8995

  KO =  112  0.153198

    X(10)     X(11)     X(12)     X(13)     X(14)     X(15)     X(30)

    0.0       0.0       0.0       0.0       0.0       0.0       0.0

    X(100)    X(101)    X(102)    X(103)    X(104)    X(105)    X(106)

    0.0       0.0       0.0       0.0       0.0       0.0       0.0

    X(107)    X(108)    X(109)    X(110)    X(111)    X(112)

    0.0       0.0       0.0       0.0       0.0       0.153198
```

Test Case 19

```
        19        23    1    1    0    0    1    1

 NO N100 N101 N102 N103 N104 N105 N106 N107 N108 N109 N110 N111 N112
  1    0    0    0    0    0    0    0    0    0    0    1    0    0

    D        DF        SP        N        NB       NVI       NN4
 100.00     0.0       1.00       2       400        0         1

  A3       A4       B3       B4       S1       S2       S3       S4
320.0000 320.0000  1.0000   1.0000   0.0      0.0     50.0000  30.0000

  T1       T2       SU1      SU2      U1       U2       L1       Q0
200.0000 150.0000  0.0      0.0     8.0000   8.0000   0.0      0.0

  R1       R2       D1       D2       R        W1       W2
 7.0000   14.0000  1.0000   1.0000   0.9000  100.0000  75.0000

  ET1      ET2      GCL3     GCL4     UU5      VV5
200.0000 150.0000  0.0      0.0     40.0000   0.0

 A(J)
-50.0000  50.0000

 ALL B(J) = 0.

 SW1      S5       R3
86.6025  38.7298   9.8995

 KO =  110  0.268495

   X(10)    X(11)    X(12)    X(13)    X(14)    X(15)    X(30)

   0.0      0.0      0.0      0.0      0.0      0.0      0.0

   X(100)   X(101)   X(102)   X(103)   X(104)   X(105    X(106)

   0.0      0.0      0.0      0.0      0.0      0.0      0.0

   X(107)   X(108)   X(109)   X(110)   X(111)   X(112)

   0.0      0.0      0.0      0.268495 0.0      0.0
```

Test Case 20

```
        20          23    1    1    0    0    1    1

 NO N100 N101 N102 N103 N104 N105 N106 N107 N108 N109 N110 N111 N112
 1    0    0    0    0    0    0    0    0    0    0    0    1    0

    D          DF          SP          N          NB         NVI        NM4
 100.00       0.0        1.00          2          40           0          1

   A3         A4         B3         B4         S1         S2         S3         S4
320.0000   320.0000    1.0000     1.0000     0.0        0.0        0.0        0.0

   T1         T2         SU1        SU2        U1         U2         L1         QO
200.0000   150.0000    0.0        0.0        8.0000     8.0000     0.0        0.0

   R1         R2         D1         D2         R          W1         W2
30.0000    40.0000     1.0000     1.0000     0.9000   100.0000   100.0000

   ET1        ET2        GCL3       GCL4       UU5        VV5
200.0000   200.0000    0.0        0.0       40.0000     0.0

  A(J)
-50.0000    50.0000

  ALL B(J) = 0.

  SW1        S5         R3
100.0000    0.1000    34.6410

  KO =   111   0.383570

    X(10)      X(11)      X(12)      X(13)      X(14)      X(15)      X(30)

    0.0        0.0        0.0        0.0        0.0        0.0        0.0

    X(100)     X(101)     X(102)     X(103)     X(104)     X(105)     X(106)

    0.0        0.0        0.0        0.0        0.0        0.0        0.0

    X(107)     X(108)     X(109)     X(110)     X(111)     X(112)

    0.0        0.0        0.0        0.0        0.383570   0.0
```

5.12. TEST CASES FOR A RIPPLE OF DISPENSERS, CIRCULAR ANNULUS BOMBLET PATTERN

$X(100)$ through $X(102)$ are the same, respectively, as $X(110)$ through $X(112)$ except that the bomblet patterns are circular. Further, an approximation is made that is valid only when the ratio of the pattern radius to the ballistic error is sufficiently large. $X(100)$ applies to the fragmentation case while $X(102)$ applies to the cookie-cutter case. $X(101)$ is the fragmentation case when edge effects must be taken into account.

Test Case 21

```
        21        23    1    1    0    0    1    1

  NO N100 N101 N102 N103 N104 N105 N106 N107 N108 N109 N110 N111 N112
   1    1    0    0    0    0    0    0    0    0    0    0    0    0

     D          DF          SP          N          NB         NVI        NN4
   30.00       0.0        1.00          6         200          0          1

   A3         A4         B3         B4         S1         S2         S3         S4
400.0000   200.0000   1.0000     1.0000     0.0        0.0       30.0000    30.0000

   T1         T2         SU1        SU2        U1         U2         L1         QO
200.0000   150.0000   0.0        0.0        8.0000     8.0000     0.0        0.0

   R1         R2         D1         D2         R          W1         W2
  7.0000    14.0000    1.0000     1.0000     0.9000   100.0000   100.0000

   ET1        ET2        GCL3       GCL4       UU5        VV5
200.0000   200.0000   0.0        0.0       40.0000     0.0

  A(J)
-75.0000  -45.0000  -15.0000   15.0000   45.0000   75.0000

  ALL B(J) = 0.

  SW1        S5         R3
100.0000   30.0000    9.8995

  KO =   100  0.419609

    X(10)      X(11)      X(12)      X(13)      X(14)      X(15)      X(30)

    0.0        0.0        0.0        0.0        0.0        0.0        0.0

    X(100)     X(101)     X(102)     X(103)     X(104)     X(105)     X(106)

    0.419609   0.0        0.0        0.0        0.0        0.0        0.0

    X(107)     X(108)     X(109)     X(110)     X(111)     X(112)

    0.0        0.0        0.0        0.0        0.0        0.0
```

Test Case 22

```
        22        23    1    1    0    0    1    1

 NO N100 N101 N102 N103 N104 N105 N106 N107 N108 N109 N110 N111 N112
 1    0    0    1    0    0    0    0    0    0    0    0    0    0

    D        DF        SP        N        NB       NVI       NN4
  30.00      0.0      1.00       6       200        0         1

   A3       A4       B3       B4       S1       S2       S3       S4
400.0000 200.0000 10.0000. 10.0000   0.0      0.0     30.0000  30.0000

   T1       T2       SU1      SU2      U1       U2       L1       QQ
200.0000 150.0000   0.0      0.0     8.0000   8.0000   0.0      0.0

   R1       R2       D1       D2       R        W1       W2
  1.0000   1.0000   1.0000   1.0000   0.9000 100.0000 100.0000

   ET1      ET2      GCL3     GCL4     UU5      VV5
200.0000 200.0000   0.0      0.0     40.0000   0.0

  A(J)
-75.0000 -45.0000 -15.0000  15.0000  45.0000  75.0000

  ALL B(J) = 0.

  SW1      S5       R3
100.0000  30.0000   1.0000

  KO =  102  0.226833

    X(10)    X(11)    X(12)    X(13)    X(14)    X(15)    X(30)

    0.0      0.0      0.0      0.0      0.0      0.0      0.0

    X(100)   X(101)   X(102)   X(103)   X(104)   X(105)   X(106)

    0.0      0.0      0.226833 0.0      0.0      0.0      0.0

    X(107)   X(108)   X(109)   X(110)   X(111)   X(112)

    0.0      0.0      0.0      0.0      0.0      0.0
```

Test Case 23

```
        23        23    1    1    0    0    1    1

  N0 N100 N101 N102 N103 N104 N105 N106 N107 N108 N109 N110 N111 N112
   1    0    1    0    0    0    0    0    0    0    0    0    0    0

     D        DF        SP        N        NB       NVI       NN4
   30.00      0.0      1.00       6        20         0         1

   A3       A4       B3       B4       S1       S2       S3       S4
400.0000 200.0000  1.0000   1.0000    0.0      0.0      0.0      0.0

   T1       T2      SU1      SU2      U1       U2       L1       Q0
200.0000 150.0000   0.0      0.0    8.0000   8.0000    0.0      0.0

   R1       R2       D1       D2       R       W1       W2
 15.0000  19.0000  1.0000   1.0000   0.9000  100.0000 100.0000

   ET1      ET2     GCL3     GCL4     UU5      VV5
200.0000 200.0000   0.0      0.0    40.0000   0.0

  A(J)
-75.0000 -45.0000 -15.0000  15.0000  45.0000  75.0000

  ALL B(J) = 0.

  SW1      S5       R3
100.0000  0.1000  16.8819

  KO =  101  0.211221

    X(10)     X(11)     X(12)     X(13)     X(14)     X(15)     X(30)

    0.0       0.0       0.0       0.0       0.0       0.0       0.0

    X(100)    X(101)    X(102)    X(103)    X(104)    X(105)    X(106)

    0.0       0.211221  0.0       0.0       0.0       0.0       0.0

    X(107)    X(108)    X(109)    X(110)    X(111)    X(112)

    0.0       0.0       0.0       0.0       0.0       0.0
```

Appendix A

TRAIN DISTRIBUTION

Consider a train of N weapons delivered in a pattern. The ballistic centers of impact forming the pattern are at points $(a_i,b_i), i=1,2,\ldots,N$. The origin is selected such that $\Sigma a_i=\Sigma b_i=0$. Each weapon is subject independently to a ballistic error whose distribution B is assumed to be of the form

$$B(X,Y)=B_1(X)B_2(Y),$$

where $B_1(X)$ is the distribution of ballistic errors in range (x) and $B_2(Y)$ is the distribution in deflection (y). Let $b_1(x)$ and $b_2(y)$ be the corresponding density function, i.e.,

$$B_1(X)=\int_{-\infty}^{X} b_1(x)dx.$$

We shall assume that the distributions have mean zero and standard deviations s_x and s_y, respectively.

The form of the functions b_1 and b_2, the values of s_x and s_y, and the pattern values (a_i,b_i) must be determined through some testing procedure. If the data are sufficiently complete (individual data for each weapon in a train), the individual distributions B_1 and B_2 can be used as required in the methods of Ref. [1]. In general, B_1 and B_2 can be arbitrary distributions. For normal train bombing, the values of a_i and b_i can be determined from the delivery conditions and intervalometer settings. For the methodology of Sec. 3, it is necessary that B_1 and B_2 be gaussian in form, so that only s_x and s_y are needed. The spacings a_i and b_i are, of course, necessary as further inputs. However, for some of the cluster-type weapons, the complete data are not available. Although the complete data are available in other cases, the simplification considered here is usually sufficient.

Let us assume that the test data in range are only sufficient to estimate the expected number of weapons landing in a set of range intervals. Specifically, for a

set of K intervals between the points $X_0, X_1, X_2, \ldots, X_K$, we obtain the corresponding number of weapons $N_1, N_2, \ldots, N_K$, where the total number is $M = \Sigma_{i=1}^{K} N_i$. We form the percentage distribution within intervals

$$w_i = \frac{N_i}{M},$$

and the sample density

$$p_i = \frac{w_i}{X_i - X_{i-1}}, \qquad i = 1, 2, \ldots, K. \tag{A.1}$$

We shall view the p_i as an estimate of the probability density function $\rho(x)$ of a single weapon, where $P(X) = \int_{-\infty}^{X} \rho(x)dx$ is the probability that an individual weapon landed $\leq X$. Basically, we are using as an approximate model one in which each weapon is randomly drawn from the positions in the train. We therefore assume that

$$\begin{aligned} \rho(X) &= p_i, \qquad X_{i-1} \leq X \leq X_i, \\ P(X_j) &= \sum_{i=1}^{j} p_i, \qquad j = 1, 2, 3, \ldots, K. \end{aligned} \tag{A.2}$$

The first moment $\overline{X}$ and variance S^2 of the distribution $P(X)$ are given by

$$\begin{aligned} \overline{X} &= \int z\rho(z)dz = \sum_{i=1}^{K} p_i \left(\frac{X_{i-1} - X_i}{2} \right), \\ S^2 &= \int z^2 \rho(z)dz = \sum_{i=1}^{K} w_i \left(\frac{X_{i-1}^2 + X_i X_{i-1} + X_i^2}{3} \right) - \overline{X}. \end{aligned} \tag{A.3}$$

The above model, in effect, assumes that each weapon in the pattern is aimed at the center of the pattern. For symmetric patterns, the center is estimated as the mean point $\overline{X}$. However, the data are often quite irregular, so that some smooth-

ing must be done. We have chosen to use the quartiles $X_{.25}$ and $X_{.75}$ as characteristics to be used in the fitting process, since their use introduces a type of smoothing. The center X_c then is defined as the midpoint between the quartiles

$$X_c = \frac{X_{.25} + X_{.75}}{2}. \tag{A.4}$$

For symmetric patterns, $X_c = \overline{X}$. Thus $X_{.25}$ and $X_{.75}$ are defined by the equations

$$P(X_{.25}) = .25,$$

$$P(X_{.75}) = .75.$$

Define I and J by the conditions

$$\begin{aligned} &P(X_I) < .25, \qquad P(X_{I+1}) > .25, \\ &P(X_J) < .75, \qquad P(X_{J+1}) > .75. \end{aligned} \tag{A.5}$$

Then $X_{.25}$ and $X_{.75}$ are given by the equations

$$\begin{aligned} X_{.25} &= X_I + \frac{(.25 - P(X_I))(X_{I+1} - X_I)}{P(X_{I+1}) - P(X_I)}, \\ X_{.75} &= X_J + \frac{(.75 - P(X_J))(X_{J+1} - X_J)}{P(X_{J+1}) - P(X_J)}, \end{aligned} \tag{A.6}$$

where $P(X_j)$ is given in (A.2).

Finally, making the change in variable $x = X - X_c$ to center the coordinate system on the pattern center and using (A.4), we obtain the center x_c and the quartiles $x_{.25}$ and $x_{.75}$:

$$x_c = 0,$$

(A.7) $$x_{.75} = X_{.75} - X_c = \frac{X_{.75} - X_{.25}}{2},$$

$$x_{.25} = X_{.25} - X_c = \left(\frac{X_{.25} - X_{.75}}{2}\right) = -x_{.75},$$

where $X_{.25}$ and $X_{.75}$ are given in (A.6). Thus, we have characterized the data by three characteristics: x_c, S, and $x_{.75}$.

In this case, we do not have enough information to determine the form of the ballistic distribution $B_1(X)$ or of the pattern a_i. Let us assume that the form of $B_1(X)$ is gaussian with variance s_x^2 and that the a_i are known. Then, for a delivery of N weapons, the expected number falling short of X is

$$\sum_{i=1}^{N} B_1\left(\frac{x-a_i}{s_x}\right) = \sum_{i=1}^{N} G\left(\frac{x-a_i}{s_x}\right),$$

and the percentage of weapons expected to fall short of X is

$$Q(x) = \frac{1}{N}\sum_{i=1}^{N} G\left(\frac{x-a_i}{s_x}\right).$$

The function $P(x)$ is an approximation to this function, $Q(x)$. We will make the assumption that the N weapons are evenly spaced, i.e.,

(A.8) $$a_i = (2i-N-1)d,$$

where $2d$ is the spacing. We have characterized P by three parameters: $x_c = 0$, variance S^2, and upper quartile $x_{.75}$. We will determine values for d and s_x under the restriction that the distributions $Q(x)$ and $P(x)$ have the same variances and quartiles. Our conditions are thus

$$S^2 = s_x^2 + \frac{d^2}{N}\sum_{i=1}^{N} (2i-N-1)^2,$$

(A.9)
$$\frac{1}{N}\sum_{i=1}^{N} G\left(\frac{x_{.75}-a_i}{s_x}\right)=.75,$$

$$\frac{1}{N}\sum_{i=1}^{N} G\left(\frac{x_{.25}-a_i}{s_x}\right)=.25.$$

Since $x_{.25} = -x_{.75}$, the latter two are equivalent. Subtracting and combining, we obtain the equivalent condition

(A.10)
$$\frac{1}{N}\sum_{i=1}^{N}\left[G\left(\frac{x_{.75}-a_i}{s_x}\right)-G\left(\frac{-x_{.75}-a_i}{s_x}\right)\right]=\frac{1}{N}\sum_{i=1}^{N} f\left(\frac{a_i}{s_x},\frac{x_{.75}}{s_x}\right)=.5,$$

where $f(x,y)$ is defined as

$$f(x,y)=G(x+y)-G(x-y),$$

and thus $f(-x,y) = f(x,y)$. In summary, our conditions are

$$S^2=s_x^2+\frac{d^2}{N}\sum_{i=1}^{N}(2i-N-1)^2,$$

(A.11)
$$\frac{1}{N}\sum_{i=1}^{N} f\left(\frac{a_i}{s_x},\frac{x_{.75}}{s_x}\right)=.5,$$

$$x_c=0.$$

i.e., d and s_x are determined from these conditions.

Appendix B

STICK DISTRIBUTION

There are occasions when the ballistic dispersion of a cluster of weapons may be approximated by what will be called the "stick distribution." Consider the problem of throwing a stick at a line perpendicular to the stick in an attempt to cover the line. Assume a stick of length $2L$, with the center aimed at the point 0. Assume that the error in throwing the stick is governed by a gaussian distribution with variance s^2. The probability of covering the offset point x is given by

$$\text{Prob(point at } x \text{ covered)} = \int_{x-L}^{x+L} g\left(\frac{y}{s}\right)\frac{dy}{s},$$

where $g(x) = \exp(-x^2/2)/\sqrt{2\pi}$. Define the function $h(x,L)$ as

$$h(x,L) = \frac{1}{2L}\int_{x-L}^{x+L} g(y)\,dy. \tag{B.1}$$

The function $h(x,L)$ can be viewed as a probability density function, since

$$\int_{-\infty}^{\infty} h(x,L)\,dx = 1. \tag{B.2}$$

We will call the distribution function $H(x,L)$ the stick distribution, i.e.,

$$H(X,L) = \int_{-\infty}^{X} h(y,L)\,dy = \int_{-\infty}^{X} \frac{1}{2L}\int_{y-L}^{y+L} g(z)\,dz\,dy. \tag{B.3}$$

More generally, we have

$$H\left(\frac{X}{s},\frac{L}{s}\right) = \int_{-\infty}^{X/s} h\left(y,\frac{L}{s}\right)dy = \int_{-\infty}^{X} h\left(\frac{y}{s},\frac{L}{s}\right)\frac{dy}{s}. \tag{B.4}$$

The first moment of $H(X/s,L/s)$ is

$$\int_{-\infty}^{\infty} y\,h\left(\frac{y}{s},\frac{L}{s}\right)\frac{dy}{s} = 0, \tag{B.5}$$

and the variance is

$$\int_{-\infty}^{\infty} y^2 h\left(\frac{y}{s},\frac{L}{s}\right)\frac{dy}{s}=s^2+\frac{L^2}{3}. \tag{B.6}$$

Note that we can express H in terms of G and g. Using Lemma 3 of App. D and (B.3), we obtain

$$H(X,L)=\int_{-\infty}^{X}\frac{1}{2L}[G(y+L)-G(y-L)]\,dy \tag{B.7}$$

$$=\frac{1}{2L}[(X+L)G(X+L)-(X-L)G(X-L)+g(X+L)-g(X-L)].$$

The stick distribution above is often a good approximation to the train distribution $P(x)$ discussed in the preceding section. As in App. A, assume $P(x)$ to be characterized by the three parameters $x_c=0$, variance S^2, and upper quartile $x_{.75}$, $(x_{.25}=-x_{.75})$. Requiring that P and its approximation H have the same center coordinate, variances, and quartiles, we obtain the conditions

$$S^2=s^2+\frac{L^2}{3},$$

$$H\left(\frac{x_{.75}}{s},\frac{L}{s}\right)=.75, \tag{B.8}$$

$$H\left(\frac{x_{.25}}{s},\frac{L}{s}\right)=.25,$$

where S and $x_{.75}$ are given in (A.3) and (A.7). Subtracting the last two equations in (B.8) and using the relation $x_{.25}=-x_{.75}$, we obtain an alternate condition

$$H\left(\frac{x_{.75}}{s},\frac{L}{s}\right)-H\left(\frac{-x_{.75}}{s},\frac{L}{s}\right)=.5.$$

Thus, we may express the conditions (B.8) as

$$x_c=0,$$

$$S=s^2+\frac{L^2}{3},$$

$$F\left(0,\frac{x_{.75}}{s},\frac{L}{s}\right)=.5,$$

where the function $F(x,y,L)$ is defined as in (4.12) as

$$F(x,y,L)=H(x+y,L)-H(x-y,L).$$

Appendix C

THE ELLIPTIC COVERAGE FUNCTION

The elliptic coverage function $P(R_1,R_2;a,b)$ is defined as the integral of a circular gaussian distribution of unit variance over the area enclosed by an offset ellipse with center at (a,b) and axes R_1,R_2 in the x and y directions. Thus, we have

$$P(R_1,R_2;a,b)\equiv\iint_{A_1} g(x)g(y)\,dxdy, \tag{C.1}$$

where

$$A_1:\left(\frac{x-a}{R_1}\right)^2+\left(\frac{y-b}{R_2}\right)^2\le 1$$

and

$$g(x)=\frac{\exp(-x^2/2)}{\sqrt{2\pi}}.$$

Making the change of variable $\xi=x\sigma_x$, $\eta=y\sigma_y$, we obtain

$$P\left(\frac{R_1}{\sigma_x},\frac{R_2}{\sigma_y};\frac{a}{\sigma_x},\frac{b}{\sigma_y}\right)=\iint_{A_1} g\left(\frac{\xi}{\sigma_x}\right)g\left(\frac{\eta}{\sigma_y}\right)\frac{d\xi d\eta}{\sigma_x\sigma_y}; \tag{C.2}$$

i.e., an equivalent definition is the integral of a bivariate gaussian over an offset ellipse. Similarly, we obtain

$$P\left(\frac{R}{\sigma_x},\frac{R}{\sigma_y};\frac{a}{\sigma_x},\frac{b}{\sigma_y}\right)=\iint_{A_2} g\left(\frac{\xi}{\sigma_x}\right)g\left(\frac{\eta}{\sigma_y}\right)\frac{d\xi d\eta}{\sigma_x\sigma_y}, \tag{C.3}$$

where

$$A_2:(x-a)^2+(y-b)^2\le R^2.$$

Another definition is the integral of a bivariate gaussian over an offset circle. Using (C.1), if $R_1=R_2=R$ the elliptic coverage function becomes the circular coverage function $P(R,r)$, i.e.,

$$P(R,R;a,b)=P\left(R,\sqrt{a^2+b^2}\right).$$

From Ref. 1, alternate expressions for $P(R,r)$ are

$$\text{(C.4)} \qquad P(R,r)=\int_0^R z\frac{\exp(-(r^2+z^2))}{2}I_0(zr)\,dz$$

$$=R\int_r^\infty \frac{\exp(-(R^2+z^2))}{2}I_1(Rz)\,dz,$$

where $I_0(z)$ and $I_1(z)$ are Bessel functions of the first kind of imaginary argument.

If $a=b=0$, the elliptic coverage function is expressible in terms of the circular coverage function (Ref. 7). Thus, from Ref. 2, if $R_1>R_2$, we have

$$\text{(C.5)} \qquad P(R_1,R_2;0,0)=P\left(\frac{R_1+R_2}{2},\frac{R_1-R_2}{2}\right)-P\left(\frac{R_1-R_2}{2},\frac{R_1+R_2}{2}\right).$$

For $a\neq b$, $R_1\neq R_2$, the elliptic coverage function has been evaluated by various computational schemes. Included here is a computational scheme well adapted for high-speed computers based on an unpublished paper by Oliver Gross at Rand. Using the definition in (C.1) and converting to polar coordinates, we obtain

$$\text{(C.6)} \qquad P(R_1,R_2;a,b)=\iint_{A_3}\rho\frac{\exp(-\rho^2)}{2}\,\frac{d\rho d\theta}{2\pi},$$

where

$$\text{(C.7)} \qquad A_3:\left(\frac{\rho\cos\theta-a}{R_1}\right)^2+\left(\frac{\rho\sin\theta-b}{R_2}\right)^2\leq 1.$$

Consider first the case where the origin is inside the ellipse in (C.7). Then, we obtain

$$\text{(C.8)} \qquad P(R_1,R_2;a,b)=\int_0^{2\pi}\int_0^{r(\theta)}\rho\frac{\exp(-\rho^2)}{2}d\rho d\theta$$

$$=\frac{1}{2\pi}\int_0^{2\pi}\left[1-\frac{\exp(-r^2(\theta))}{2}\right]d\theta,$$

where $r(\theta)$ is the radial distance at angle θ to the ellipse E_1 obtained from (C.7) as

$$E_1: \left[\frac{r(\theta)\cos\theta - a}{R_1}\right]^2 + \left[\frac{r(\theta)\sin\theta - b}{R_2}\right]^2 = 1, \tag{C.9}$$

i.e.,

$$P(R_1, R_2; a, b) = \frac{1}{2\pi}\int_{E_1}\left[1 - \frac{\exp(-r^2(\theta))}{2}\right]d\theta, \tag{C.10}$$

where the integration is around the boundary of the ellipse E_1 given by (C.10). If the origin is not inside the ellipse in (C.7), $P(R_1, R_2; a, b)$ is given by

$$P(R_1, R_2; a, b) = \int_{\theta_1}^{\theta_2}\int_0^{r_2(\theta)} \rho\frac{\exp(-\rho^2)}{2}\,\frac{d\rho d\theta}{2\pi} - \int_{\theta_1}^{\theta_2}\int_0^{r_1(\theta)} \rho\,\exp\left(-\frac{\rho^2}{2}\right)\frac{d\rho d\theta}{2\pi}, \tag{C.11}$$

where θ_1 and θ_2 are the angular extremities of the offset ellipse, $r_2(\theta)$ is the larger radial distance to the ellipse at angle θ, and $r_1(\theta)$ is the smaller radial distance, as shown in the diagram below.

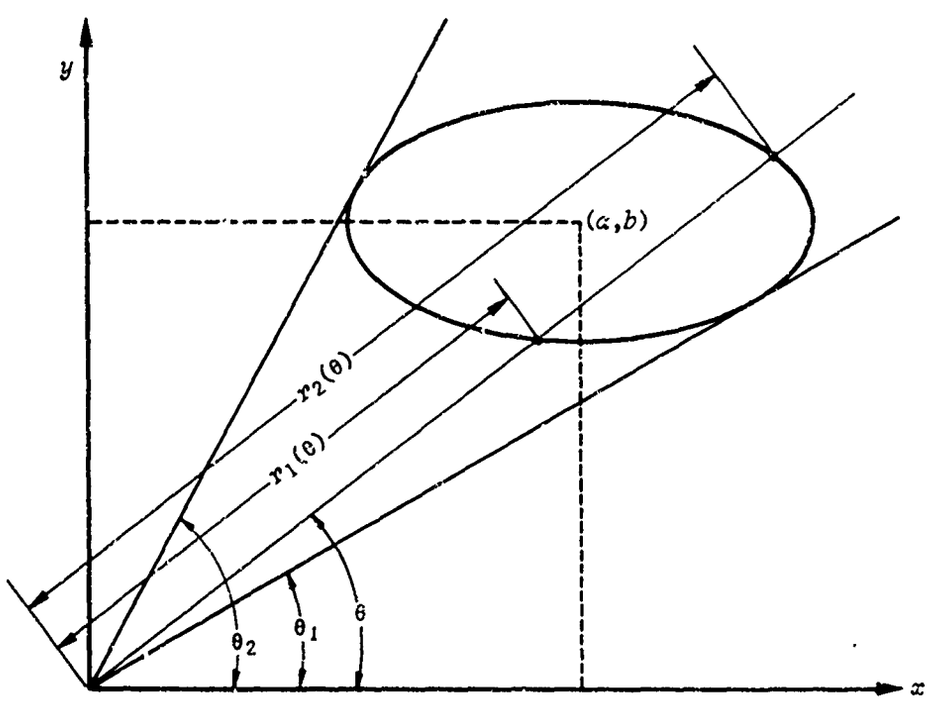

Thus, when we integrate, we obtain

$$P(R_1,R_2;a,b)=\int_{\theta_1}^{\theta_2}\left[1-\exp\left(-\frac{r_2^2(\theta)}{2}\right)\right]\frac{d\theta}{2\pi}-\int_{\theta_1}^{\theta_2}\left[1-\exp\left(-\frac{r_1^2(\theta)}{2}\right)\right]\frac{d\theta}{2\pi}, \tag{C.12}$$

where $r_2(\theta)$ is the radial distance to the ellipse E_1 of (C.9) on the far side from θ_1 to θ_2, and $r_2(\theta)$ is the radial distance to E_1 on the rear side from θ_1 to θ_2. Thus, we have

$$P(R_1,R_2;a,b)=\int_{\theta_1}^{\theta_2}\left[1-\exp\left(-\frac{r_2^2(\theta)}{2}\right)\right]\frac{d\theta}{2\pi}+\int_{\theta_2}^{\theta_1}\left[1-\exp\left(-\frac{r_1^2(\theta)}{2}\right)\right]\frac{d\theta}{2\pi} \tag{C.13}$$

$$=\frac{1}{2\pi}\int_{E_1}\left[1-\exp\left(-\frac{r^2(\theta)}{2}\right)\right]d\theta,$$

where as in (C.10), the integration is around the boundaries of the ellipse E_1 in (C.10). Thus, (C.10) holds for both cases. Let us make the transformation on θ:

$$\begin{aligned} r\cos\theta&=R_1\cos\varphi+a,\\ r\sin\theta&=R_2\sin\varphi+b, \end{aligned} \tag{C.14}$$

so that

$$r^2=(R_1\cos\varphi+a)^2+(R_2\sin\varphi+b)^2,$$

$$\tan\theta=\frac{R_2\sin\varphi+b}{R_1\cos\varphi+a}, \tag{C.15}$$

$$d\theta=\frac{R_1R_2+aR_2\cos\varphi+bR_1\sin\varphi}{r^2}.$$

Under this transformation, the offset ellipse E_1 changes into the unit circle with center at the origin. Thus, in (C.10) φ goes from 0 to 2π, so

$$P(R_1,R_2;a,b)=\frac{1}{2\pi}\int_0^{2\pi}\frac{1-\exp(-r^2/2)}{r^2}(R_1R_2+aR_2\cos\varphi+bR_1\sin\varphi)d\varphi, \tag{C.16}$$

where r is given in (C.15). Thus, the problem of evaluating $P(R_1,R_2;a,b)$ has been reduced to a simple quadrature over the interval $(0,2\pi)$.

Using a trapezoidal type of numerical integration with N intervals over the range $(0,2\pi)$, i.e., intervals of length $2\pi/N$ and the midpoint of the first interval at φ_0, we obtain

$$P(R_1,R_2;a,b)=\frac{1}{N}\sum_{j=1}^{N} Y\left\{r^2\left[\varphi_0+\frac{2\pi(j-1)}{N}\right]\right\}W\left[\varphi_0+\frac{2\pi(j-1)}{N}\right], \tag{C.17}$$

where

$$r^2(\varphi)=(R_1\cos\varphi+a)^2+(R_2\sin\varphi+b)^2,$$

$$Y(\rho)=\begin{cases}\dfrac{1-\exp(-\rho/2)}{r} & \text{if } \rho\geq .001,\\[2ex] \dfrac{1}{2}-\dfrac{r}{8}+\dfrac{r^2}{48} & \text{if } \rho<.001,\end{cases} \tag{C.18}$$

$$W(\varphi)=R_1R_2+aR_2\cos\varphi+bR_1\sin\varphi.$$

The series approximation for $Y(\rho)$ for $\rho<.001$ avoids roundoff errors for ρ small. The accuracy is, of course, a function of the number of steps N. For the ratio of R_1/R_2 reasonable, i.e., between $\frac{1}{4}$ and 4, a value of $N=80$ seems to be sufficient. For extreme cases, i.e., a ratio of 1000 to 1, N must be taken much larger.

Appendix D

USEFUL EXPRESSIONS

We will be using several relations involving the gaussian or normal distribution $G(X)$ and its density function $g(X)=G'(X)$, i.e.,

$$G(X)=\int_{-\infty}^{X} g(y)\,dy=\int_{-\infty}^{X} \frac{\exp(-y^2)}{2}\,\frac{dy}{\sqrt{2\pi}}, \tag{D.1}$$

$$g(y)=\frac{\exp(-y^2/2)}{\sqrt{2\pi}}. \tag{D.2}$$

For completeness, we include these relations as lemmas, together with short derivations.

Lemma 1. Let A, s, and t be real, $s>0, t>0$. Then,

$$I_1=\int_{-\infty}^{\infty} G\left(\frac{x+A}{s}\right)g\left(\frac{x}{t}\right)\frac{dx}{t}=G\left(\frac{A}{\sqrt{s^2+t^2}}\right), \tag{D.3}$$

$$I_2=\int_{-\infty}^{\infty} g\left(\frac{x+A}{s}\right)g\left(\frac{x}{t}\right)\frac{dx}{st}=\frac{g(A/\sqrt{s^2+t^2})}{\sqrt{s^2+t^2}}. \tag{D.4}$$

Proof. Using (D.1), (D.2), and a change in variable, we obtain

$$I_1=\int_{-\infty}^{\infty}\int_{-\infty}^{A} \exp\left(-\frac{1}{2}\left[\frac{(x+y)^2}{s^2}+\frac{x^2}{t^2}\right]\right)\frac{dy\,dx}{2\pi st}.$$

Changing the order of integration, expanding, and integrating, we obtain

$$I_1=\int_{-\infty}^{A} \exp\left(-\frac{y^2}{2(s^2+t^2)}\right)\frac{dy}{\sqrt{(2\pi)(s^2+t^2)}}=G\left(\frac{A}{\sqrt{s^2+t^2}}\right).$$

Similarly, we have

$$I_2=\int_{-\infty}^{\infty} \exp\left(-\frac{1}{2}\left[\frac{(x+A)^2}{s^2}+\frac{x^2}{t^2}\right]\right)\frac{dx}{2\pi st}=\frac{\exp(-A^2/2(s^2+t^2))}{\sqrt{2\pi(s^2+t^2)}}=g\left(\frac{A/\sqrt{s^2+t^2}}{\sqrt{s^2+t^2}}\right).$$

We note that (D.4) can be expressed in a slightly different form:

$$\int_{-\infty}^{\infty} \exp\left(-\frac{(x+A)^2}{2s^2}\right) g(x,t)\frac{dx}{t} = \frac{s}{\sqrt{s^2+t^2}} \exp\left(\frac{A^2}{2(s^2+t^2)}\right).$$

Lemma 2. Let A, B, and s be real, $A \geq B$ and $s>0$. Then,

(D.5)
$$I_3 = \int_{-\infty}^{\infty} \left[G\left(\frac{x+A}{s}\right) - G\left(\frac{x+B}{s}\right)\right] dx = A-B.$$

Proof. Using (D.1) and (D.2) in the expression for I_1, and making a change in variable, we obtain

$$I_3 = \int_{-\infty}^{\infty}\int_{B}^{A} \exp\left(-\frac{(x+y)^2}{2s^2}\right)\frac{dy\,dx}{2\pi s}.$$

Changing the order of integration, we have

$$I_3 = \int_{B}^{A} dy = A-B.$$

Lemma 3. Let A, B, a, b, and t be real, $A \geq B$, $a \geq b$, $t>0$. Then,

(D.6)
$$\int_{-\infty}^{A} G(x)\,dx = AG(A) + g(A),$$

(D.7)
$$I_4 = \int_{B}^{A} \left[G\left(\frac{x+a}{t}\right) - G\left(\frac{x+b}{t}\right)\right] dx$$

$$= (A+a)G\left(\frac{A+a}{t}\right) + (B+b)G\left(\frac{B+b}{t}\right)$$

$$-(A+b)G\left(\frac{A+b}{t}\right) - (B+a)G\left(\frac{B+a}{t}\right)$$

$$+t\left[g\left(\frac{A+a}{t}\right) + g\left(\frac{B+b}{t}\right) - g\left(\frac{B+a}{t}\right) - g\left(\frac{A+b}{t}\right)\right].$$

Proof. Integrating by parts, we obtain (D.6) immediately:

$$\int_{-\infty}^{A} G(x)\,dx = AG(A) - g(A).$$

Using (D.6), we obtain

$$\text{(D.8)} \qquad \int_{-\infty}^{A} G\left(\frac{x+a}{t}\right) dx = (A+a)\,G\left(\frac{A+a}{t}\right) + t\,g(A+a).$$

We may express I_4 in the form

$$\text{(D.9)} \qquad I_4 = \int_{-\infty}^{A}\left[G\left(\frac{x+a}{t}\right)dx - \int_{-\infty}^{A} G\left(\frac{x+b}{t}\right)\right]dx + \int_{-\infty}^{B}\left[G\left(\frac{x+b}{t}\right)dx - \int_{-\infty}^{B} G\left(\frac{x+a}{t}\right)\right]dx,$$

and using (D.8) in each of the four integrals in (D.9), we obtain (D.7).

Lemma 4. Let A, L, and t be real and positive. Then,

$$\text{(D.10)} \qquad I_5 = \int_{-A}^{A}\left[G\left(\frac{x+L}{t}\right) - G\left(\frac{x-L}{t}\right)\right]dx$$

$$= 2\left[AH\left(\frac{A}{t},\frac{L}{t}\right) + LH\left(\frac{L}{t},\frac{A}{t}\right)\right] + t\left[g\left(\frac{A+L}{t}\right) + g\left(\frac{A-L}{t}\right)\right].$$

Proof. In (D.7) of Lemma 3, let $A=A$, $B=-A$, $a=L$, $b=-L$. Then (D.10) follows, since $g(x)=g(-x)$.

Lemma 5. Let u and a_i be real and s_i and t be real and positive for $n=1,2,\ldots,N$. Then,

$$\text{(D.11)} \qquad I_6 = \int_{-\infty}^{\infty} \exp\left(-\sum_{i=1}^{n}\frac{(u-a_i-x)^2}{2s_i^2}\right)\exp\left(-\frac{x^2}{2t^2}\,\frac{dx}{\sqrt{2\pi t}}\right)$$

$$= \frac{s}{\sqrt{s^2+t^2}}\,\exp\left(-\frac{\overline{a^2}-\bar{a}^2}{2s^2}\right)\exp\left(-\frac{(u-a)^2}{2(s^2+t^2)}\right),$$

where

$$\frac{1}{s^2}=\sum_{i=1}^{n}\frac{1}{s_i^2},$$

$$\bar{a}=s^2\sum_{i=1}^{n}\frac{a_i}{s_i^2},$$

$$\overline{a^2}=s^2\sum_{i=1}^{n}\frac{a_i^2}{s_i^2}.$$

Proof. When we use the definitions of s, $\bar{a}$, and $\overline{a^2}$ above, the first exponential under the integral in the definition of I_6 becomes

$$\exp\left(-\frac{x^2-2x(u-\bar{a})+u^2-2u\bar{a}+\overline{a^2}}{2s^2}\right)=\exp\left(-\frac{[x-(u-\bar{a})]^2}{2s^2}\right)\exp\left(-\frac{\overline{a^2}-\bar{a}^2}{2s^2}\right).$$

Thus, I_6 becomes

$$I_6=\exp\left(-\frac{\overline{a^2}-\bar{a}^2}{2s^2}\right)\int_{-\infty}^{\infty}\exp\left(-\frac{[x-(u-\bar{a})]^2}{2s^2}\right)\exp\left(-\frac{x^2}{2t^2}\frac{dx}{\sqrt{2\pi}\tau}\right). \tag{D.12}$$

Using Lemma 1, we obtain

$$I_6=\frac{s}{\sqrt{s^2+t^2}}\exp\left(-\frac{\overline{a^2}-\bar{a}^2}{2s^2}\right)\exp\left(-\frac{(u-\bar{a})^2}{2(s^2+t^2)}\right). \tag{D.13}$$

Lemma 6. Let $h(x,L)=[G(x+L)-G(x-1)]/2L$. *Then if* t *and* s *are real and positive,*

$$I_7=\int_{-\infty}^{\infty}h\left(\frac{x}{t},\frac{L}{t}\right)g\left(\frac{u-x}{s}\right)\frac{dx}{st}=h\left(\frac{u/t'}{t'},\frac{L/t'}{t'}\right),$$

where

$$t=\sqrt{s^2+t^2}.$$

Proof.

$$I_7=\frac{1}{2L}\int_{-\infty}^{\infty}\int_{(x-L)/t}^{(x+L)/t} g(y)g\left(\frac{u-x}{s}\right)\frac{dy\,dx}{s}.$$

Making appropriate changes in variables and inverting the order of integration, we obtain

$$I_7=\frac{1}{2L}\int_{-L}^{L}\int_{-\infty}^{\infty} g\left(\frac{u+\xi+\eta}{t}\right)g\left(\frac{\xi}{s}\right)\frac{d\xi\,d\eta}{st}.$$

Using Lemma 1, we have

$$I_7=\int_{-L}^{L} g\left(\frac{u+\eta}{t'}\right)\frac{d\eta}{2Lt'}=\frac{h(u/t',L/t')}{t'}.$$

REFERENCES

1. Snow, Roger, *FAST-VAL: A Theoretical Approach to Some General Target Coverage Problems*, The Rand Corporation, RM-4566-PR, March 1966 (For Official Use Only).

2. Harris, K., R. N. Snow, and J. R. Lind, *FAST-VAL: Target Coverage Model*, The Rand Corporation, RM-4567-PR, March 1966 (For Official Use Only).

3. Snow, Roger, *A Simplified Target Coverage Model*, The Rand Corporation, RM-5152-PR, November 1967 (For Official Use Only).

4. Gates, Leslie, Jr., "Comparison of Two Target Analysis Systems," Armed Forces Special Weapons Project, Technical Analysis Report AFSWP No. 506, Washington, D.C., August 1954.

5. Groves, Arthur D., "A Method for Hand Computing the Expected Fractional Kill of an Area Target with a Salvo of Area Kill Weapons," Ballistic Research Laboratories Memorandum, Report No. 1544, Aberdeen, Maryland, January 1964.

6. Germond, H. H., *The Circular Coverage Function*, The Rand Corporation, RM-330, January 26, 1950.

7. Snow, Roger, *Some Characteristics of the Elliptic Gaussian Distribution*, The Rand Corporation, RM-2765-PR, September 1961.