REPORT No. A.I.D./D000002/68
PART 1

REPORT No. A.I.D./D000002/68
PART 1

AD 709960

MINISTRY OF TECHNOLOGY

AERONAUTICAL INSPECTION DIRECTORATE

A.I.D. LABORATORIES, HAREFIELD.

Endurance tests on Flexible Wire Ropes for Aircraft Flying Controls

D D C
AUG 13 1970
C

UNLIMITED

DISTRIBUTED BY
TECHNICAL INFORMATION AND LIBRARY SERVICES
MINISTRY OF TECHNOLOGY

D.G.I. Form 126

63

Report No. AID/D.000002/68 Part 1

Date January, 1968.

U.D.C. No. 620.169: 677.72: 629.13.014.05

A.I.D. Development Report

Endurance tests on Flexible Wire Rope for Aircraft Flying Controls

by

H. A. Senior, J. A. N. Spear

1. Introduction

2. Description of Apparatus

3. Method of Testing

4. Test Results

5. Discussion of Results

6. Conclusions

Tables 1 to 41

Photographs A and B

Figures 1 to 5

Summary

The programme of endurance tests on flexible wire rope for aircraft flying controls which were devised to assess the effects of different pulley sizes, cycling speeds, rope tensing and pulley wrap angles has now been completed. The results of all the tests (including those detailed in Interim ~~Report No. AID/DEV/92/66)~~ are given in ~~this report~~. In addition a description is given of a new endurance test machine which ~~has been~~ developed for routine test work.

Approved by

W. Thompson.

C.P.L.I.

on behalf of D.A.I.

464360J.

1. Introduction

1.1 In 1962 a memorandum prepared by British Standard Institution Technical Committee ACE13 (Cables and Wire for Aircraft) indicated that it had been working on the revision of existing British Standards W.9 and W.11 for flexible wire ropes for aircraft controls and the preparation of a new standard for future use, on the lines most likely to be acceptable as an A.B.C. and world (I.S.O.) Standard. The Committee had also decided that both the revisions and the new standard should include an endurance test, since this is a requirement of the equivalent American and European (A.I.C.M.A.) standards and also because of the higher speeds and longer life (in terms of flying hours) of modern aircraft.

The results of a programme of work done on the endurance testing of wire ropes by Hawker Siddeley (Havilland Division) Ltd., under conditions closely similar to those obtaining in aircraft control circuits, indicated that the American and European (A.I.C.M.A.) endurance test is unrealistic in the light of modern aircraft installations. B.S.I. Technical Committee ACE/13, therefore, agreed on the principles of a new endurance test method and drew up a programme of tests to provide a basis for suitable test conditions which would more closely simulate actual operating conditions. A.I.D. Laboratories were requested to carry out the necessary development work to provide a suitable test for inclusion in the relevant British Standards and for submission to I.S.O., to A.I.C.M.A. and to the United States for possible world wide adoption.

1.2 In view of the foregoing, the work covered by this report was undertaken and while the primary objective was to provide a new endurance test, the programme of tests was also designed to provide the maximum amount of basic information on the behaviour of flexible wire ropes which would be useful to aircraft designers and wire rope manufacturers and users.

The complete programme of tests covered 27 varying test conditions, with at least 6 separate samples at each test condition. In August 1966 an interim report, number AID/DEV/92/66, covering the results of 6 of the 27 test series was issued. All the test series are detailed in this report.

1.3 The Flexible wire rope used for the whole programme of tests was specially manufactured, in a continuous 6,000 feet length, to draft British Standard Specification W.000 (now British Standard W.12). This length of rope was $\frac{1}{8}$ inch diameter and was lubricated during manufacture with Aeroshell GREASE 14, anti-fret lubricant. (British Specification D.T.D.900/4609A, US specification MILL-G-25537A, NATO Code No. 6-366). None of the samples used were pretreated in any way before testing.

2. Description of Apparatus

2.1 The machine used for all the tests is illustrated at Photograph A and Figure 1 shows the wire rope circuit and pulley arrangements. Full details of the machine were given in Report No. AID/DEV/92/66. A second machine was built and used, identical with the first, except that it was fitted with a motor and reduction gear suitable for cycling speeds of 100 cycles per minute.

/2.2

2.2 All the pulleys over which the rope was reciprocated were manufactured from steel heat treated to give a hardness of Hv.700 (Rockwell C.60 and ground to a fine finish of 32 micro inches C.L.A.; each pulley was mounted on standard self aligning ball bearing as used in aircraft control systems. Pulleys A, B and C were 4.5 inches in diameter and were used throughout the tests while pulleys D, E, F, G and H were either 2.25, 2.5 or 2.75 inches diameter as required by the test programme; these three diameters are equivalent to 18d, 20d or 22d, (where d is the nominal diameter of the rope under test). The rope groove in all 8 pulleys was 0.067_2 inch ($\frac{d}{2} \times 1.075$) radius, ground to an envelope tolerance of $\pm$ 0.001 inch width.

2.3 Rope tension is monitored throughout each test by means of strain gauge weigh bars, Fig. 2., which are included in the rope circuit. The tension is measured at a central multipoint strain gauge bridge to an accuracy of $\pm$ 1%.

2.4 Each machine has duplicate pulley systems so that 2 samples can be tested under similar test conditions simultaneously.

3. Methods of Testing

3.1 The full programme of testing is given in Table 1 and this programme was arranged around a series of control values of pulley diameter, rope tension and cycling speed.

These control values were:-

Pulley diameter	2.5 inches (20d)
Rope tension	140 lb. (7% of the nominal breaking strength of the rope)
Cycling speed	25 cycles per minute

The original programme called for alternative pulley diameters of 2.25 inches (18d) and 2.75 inches (22d), alternative rope tensions of 12% and 18% of the nominal breaking strength of the rope and alternative cycling speeds of 18 and 50 cycles per minute. The initial tests, however, indicated that cycling speed might not materially affect the results and in order that a saving in test time could be made, the first of the cycling speed alternatives was changed to 100 cycles per minute. It was also considered that this change might give a practical advantage when the final test conditions were evaluated.

3.2 For each type of test carried out, a minimum of 6 samples were tested and a length of approximately 21 feet was needed for each of these individual tests.

3.3 During the period of each individual test the machine was stopped a number of times for inspection of the rope-pulley contact areas. The extent of wear and the numbers of visible wires broken at each of the 5 pulley positions was recorded at each of these inspections. Tables 2 to 28 show the progression of wire failures for each test series. When more than 12 wire breaks were found at any one pulley position the test was discontinued.

/3.4

3.4 At the conclusion of the endurance test programme the breaking strength of approximately a quarter of the samples was determined. Each sample was tested at the positions where it had been in contact with pulleys E, F and G and also at an undamaged section of the rope.

3.5 As detailed in Report No. AID/DEV/92/66, observations were made on the twisting effect as the rope passed over the various pulleys and on the degree of transverse slipping between the pulley surface and the rope. Records were also kept of angular pulley slip during each period between inspections.

4. Test Results

4.1 Tables 2 to 28 show the number of visible wires broken during the course of each individual test in each of the test series. These details are listed separately for each of the 3 pulley positions E, F and G. The numbers of wire breaks at pulleys D and H were so few that only the totals at the end of each test are given. The information listed in these tables has been plotted graphically, in the form used in report No. AID/DEV/92/66 figures 2 to 19 and 22. It is considered, however, that to include the large number of graphs necessary to cover the whole programme would defeat the object of providing readily comparable values for all the variables involved. To overcome this difficulty a statistical analysis of all the results is being prepared with the assistance of the Mathematical Department, Royal Aircraft Establishment, and will be presented in Part 2 of this Report.

4.2 A series of residual breaking strengths from damaged sections of a number of the rope samples used in the programme, is given in Table 29 and these values, expressed as a percentage of the breaking strength of undamaged sections of the same ropes, are shown graphically against numbers of visible broken wires in Figure 3.

4.3 As each test progressed it was found that the rope sample stretched slightly, this extension was measured and recorded at each inspection. The values noted for each of the series tested at 100 cycles per minute and at the three tension levels (i.e. test type numbers 1, 10 and 19; 4, 13 and 22; and 7, 16 and 26) are shown in Tables 30 to 38. All these extensions were collated into a series of intervals of numbers of cycles and are shown in Tables 39 to 41. The average extension for each interval was calculated and plotted against the logarithm of the mean number of cycles within each interval, this graph is shown at Figure 4.

4.4 As was mentioned in report number AID/DEV/92/66 an attempt was made to evaluate the amount of angular pulley slip which occurred during each test. Readings were taken, at each inspection, of the angular pulley movement relative to a datum point in the machine frame. In order to get a more detailed understanding of this movement, a series of time-lapse cine photographs were taken during the whole period of some of the tests. These photographs indicated a random movement, both clockwise and anti-clockwise, and one series even showed a reversal of direction during the test. The total amount of movement also varied considerably from a part of one revolution to several complete revolutions. In view of this evidence it was considered impossible to give accurate values for this slip and the figures recorded have been ignored.

5. Discussion of Results

5.1 Part 2 of this report covers the effects due to variations of pulley size, rope tension and cycling speed as shown by a statistical analysis of the whole series. Comparative graphs have been plotted and these have confirmed that considerable increases in rope life can be obtained by small increases in the rope/pulley diameter ratios and, as might be expected, increased rope tension considerably reduces the rope life. An unexpected increase in rope life was found to result from an increase in cycling speeds.

5.2 The earlier report indicated that the most significant factor was the damaging effect of small wrap angle pulley/rope combinations. The wire wear and fatigue failure observed throughout the whole series of tests has confirmed this supposition as this damage has been confined almost exclusively to those pulley positions which have an angle of wrap of 15°.

5.3 At the conclusion of all the endurance tests, approximately a quarter of all the test samples were subject to tensile test to establish:-

(a) the breaking strength of an undamaged portion of the rope sample, and

(b) the residual breaking strength at each of the three pulley positions E, F and G.

As will be seen from Table 29 and Figure 3 there is no obvious relationship between the number of visible broken wires and residual breaking strength. In view of this a number of the broken samples which had given low residual strengths were examined. This examination revealed that those samples which had been tested at the highest cycling speed and/or at the highest rope tensions exhibited wear, indentation and, in some instances, fatigue failure of the wires forming the central strand. During the early tests, which were all carried out at the lower cycling speeds and at the lowest rope tension, a similar examination of the samples which were tensile tested, gave no indication of wear or fatigue in the central strand.

5.4 The extension of the wire rope used in this series of tests would appear to be dependent on the number of reversals to which it is subjected and also to its tension. The pulley diameter, within the limits used in the tests, would seem to have virtually no effect on this extension. Extension values from all the tests carried out at 100 cycles per minute and at each of the three rope tensions were examined and it was found that this extension largely occurs in the early stages of testing and is directly proportional to the logarithm of the number of cycles undergone. Figure 4 shows this relationship for each rope tension. The greatest amount of extension noted was less than 0.15% of the original length of the rope sample.

Before installation in an aircraft control system, most wire ropes are pre-stressed to a load equal to approximately 60% of the nominal breaking load. As none of the test lengths of rope used in this programme have been subjected to this pre-stressing it cannot be assumed that the amount of extension noted will be completely similar to that which takes place during the working life of a control rope. The figures obtained, however, could provide designers and inspectors with a useful

/indication

indication of the percentage extension which might be expected at various stages of the life of any control system rope of similar size and construction to that used in these tests.

5.5 Time-lapse cinephotography and observation during the course of the various tests has established that some slipping occurs between pulley and rope, to a greater or lesser extent at all the pulley positions irrespective of the wrap angle, although it has not been possible to obtain reliable values for the amount of this slip. From the information which has been obtained, however, it would seem probable that this slip might contribute some slight wear to the rope surfaces in contact with the pulley.

6. Conclusions

6.1 As was reported earlier the most significant factor shown by these tests is the considerable amount of damage sustained by the rope where it passes over a pulley with a small wrap angle; furthermore, the only visible broken wires were those which had been in direct contact with the pulley and which showed considerable wear.

As a rope passes over a pulley the helical formation of its outer strands imparts to it a twisting action. Photographic evidence during the early tests showed that when the angle of wrap between rope and pulley is 90° or more, this twisting movement is quite smooth with no sign of superimposed movements transverse to the general direction of twist. Similar evidence from sections of rope adjacent to the 15° wrap angle pulleys shows this same twisting movement but, with a series of small movements superimposed, these are transverse to and in the reverse direction to that of the general twisting movement. These movements can be directly related to the number of strands passing over the pulley. It would appear that with these small wrap angle conditions the rope twists but, at the points where each strand passes over the pulley and when the friction between rope and pulley is at a minimum, a small amount of the twist is released. The rope thus passes over the pulley in a series of twists and partial releases, these movements are considered to be directly responsible for the rapid wear of the wires which are in direct contact with the pulley surface. The greater contact area of the 90° wrap angle pulleys no doubt restrains this reverse movement and could account for the very few wire breaks observed at these pulley positions. It had been hoped to carry out further work to completely investigate this mechanism of wear and subsequent fatigue failure but this has not yet been possible.

6.2 Although the early tests had indicated that this method of endurance testing would tend to confine the wire failure to the external contact surfaces of the rope the later tests have shown that this supposition is not true for all the various conditions of test involved by the programme.

Examination of many more of the endurance test samples will be necessary to obtain precise information of the conditions of test which produces fatigue failure of surfaces wire only and of those conditions which result in both external and internal wire damage and failure. The information so far available suggests that an acceptance criterion should be based on residual strength, as in the American specifications, rather than on numbers of visible wire breaks.

/6.3

6.3 This programme of tests has completely confirmed that both the pulley/rope diameter ratio and the rope tension have a very critical effect on the endurance life of the wire rope. Although no hard and fast minimum values for all sizes and constructions can be formulated without more experimental work it is considered that pulley/rope diameter ratios below 20 and rope tensioning loads greater than 7% of the specified nominal breaking load should be avoided in control system design.

6.4 Because of the many combinations of test conditions which had to be met by the programme, and in order to obtain a useful amount of information in the shortest time, only one size of rope was tested. In view of this limitation it is not yet possible to specify final test conditions which could be incorporated in the relevant British Standards.

The statistical analysis detailed in Part 2 of this report (due for publication in approximately 6 weeks time), provides information for tentative recommendations for the test conditions which could be expected to give the most consistent endurance values with a test duration comparable with existing methods. The conditions are being included in the current test programme and it is expected that the additional information required for more definite recommendations should be available within the next 12 months.

6.5 Although the work covered by this report has not yet resulted in concrete proposals for an endurance test which could be included in the British Standard Specification for flexible wire ropes for aircraft flying controls it has provided a new test method which is considered to be more realistic than existing methods and it has also provided information on the behaviour, under conditions similar to those in an aircraft circuit, of wire rope which should be very useful to aircraft designers and wire rope manufacturers.

7. Further Work

7.1 The whole programme of testing detailed in this report was carried out on the machines built to the original design described in Report No. AID/DEV/92/66 and, as was envisaged in this report, these machines have proved very successful for this type of research programme. Further work to evaluate test parameters for other rope sizes and constructions and to determine the effects on rope life of coating pulley surfaces with non-metallic materials is contemplated. However, as this machine design is not considered to be suitable for production testing, a new machine has been designed and built and is illustrated at Photograph B and Figure 5. This machine, while still simulating the more severe conditions likely to occur in aircraft control systems, is compact and can test 8 comparatively short rope samples at any of the various conditions of test likely to be suggested for inclusion in the specifications.

Preliminary tests have shown that the pattern of wire wear and mode of failure produced by the new machine is very similar to that produced by the original machines. A new programme of testing has been started with this new equipment to establish that the results obtained are comparable with those obtained in the original machines.

/Distribution:-

TABLE 1

PROGRAMME OF TESTS ON $\frac{1}{8}$ IN. DIA. CARBON STEEL WIRE ROPE

TEST TYPE NO.	ROPE SIZE IN. DIA.	PULLEY DIA. D. IN.	STROKE $\pm \frac{2}{3}$ D.	RATE OF CYCLING cycles/min.	ROPE TENSION lb.f. Percentage of Breaking Load		
					7%	12%	18%
1	$\frac{1}{8}$	2.25	1.50	100	140	-	-
2	"	"	"	25	"	-	-
3	"	"	"	50	"	-	-
4	"	"	"	100	-	240	-
5	"	"	"	25	-	"	-
6	"	"	"	50	-	"	-
7	"	"	"	100	-	-	360
8	"	"	"	25	-	-	"
9	"	"	"	50	-	-	"
10	"	2.50	1.67	100	140	-	-
11	"	"	"	25	"	-	-
12	"	"	"	50	"	-	-
13	"	"	"	100	-	240	-
14	"	"	"	25	-	"	-
15	"	"	"	50	-	"	-
16	"	"	"	100	-	-	360
17	"	"	"	25	-	-	"
18	"	"	"	50	-	-	"
19	"	2.75	1.83	100	140	-	-
20	"	"	"	25	"	-	-
21	"	"	"	50	"	-	-
22	"	"	"	100	-	240	-
23	"	"	"	25	-	"	-
24	"	"	"	50	-	"	0
25	"	"	"	100	-	-	360
26	"	"	"	25	-	-	"
27	"	"	"	50	-	-	"

TABLE 1

TABLE 2

TABLE 2

Progression of Visible Wire Failures

Test Type ....1.....

Cycling Speed ...100..... Cycles/Min. Rope Tension ...140....lb. Stroke ± ..1.50...Inches Pulley Diameter 2.25 Inches

Sample No. 1				Sample No. 2				Sample No. 3			
Cycles completed	No. of Visible Wires Broken			Cycles completed	No. of Visible Wires Broken			Cycles completed	No. of Visible Wires Broken		
	Pulley E	Pulley F	Pulley G		Pulley E	Pulley F	Pulley G		Pulley E	Pulley F	Pulley G
22,000	0	0	2	25,000	2	3	1	25,000	2	1	3
30,000	0	1	3	35,000	3	4	4	45,000	3	2	3
35,000	0	1	4	45,000	3	6	4	55,000	4	3	3
45,000	1	1	5	55,000	4	7	4	75,000	4	4	3
55,000	1	3	9	65,000	4	8	4	85,000	4	6	3
60,000	2	3	12	75,000	5	12	6	95,000	4	8	3
70,000	2	4	13	85,000	5	13	8	107,000	5	8	3
				95,000	5	15	9	117,000	7	9	4
				105,000	6	16	12	148,000	13	9	6

Sample No. 4				Sample No. 5				Sample No. 6			
Cycles completed	No. of Visible Wires Broken			Cycles completed	No. of Visible Wires Broken			Cycles completed	No. of Visible Wires Broken		
	Pulley E	Pulley F	Pulley G		Pulley E	Pulley F	Pulley G		Pulley E	Pulley F	Pulley G
22,000	0	2	3	25,000	2	0	1	35,000	2	2	1
30,000	2	3	5	35,000	4	1	2	45,000	2	3	1
35,000	3	3	5	45,000	5	1	3	65,000	4	3	1
45,000	5	5	7	55,000	5	4	4	85,000	6	4	2
55,000	7	6	8	65,000	5	6	5	95,000	8	5	3
60,000	7	6	10	75,000	5	8	5	115,000	10	6	5
70,000	13	8	11	85,000	5	9	6	126,000	11	6	6
				95,000	5	11	7	136,000	11	7	6
				105,000	5	13	7	146,000	12	7	10

Progression of Visible Wire Failures

Cycling Speed ....100..... Cycles/Min. Rope Tension ....140....lb. Stroke ± ..1.50....Inches Test Type .....1..... Pulley Diameter 2.25 Inches

Sample No. 7				Sample No.				Sample No.			
Cycles completed	No. of Visible Wires Broken			Cycles completed	No. of Visible Wires Broken			Cycles completed	No. of Visible Wires Broken		
	Pulley E	Pulley F	Pulley G		Pulley E	Pulley F	Pulley G		Pulley E	Pulley F	Pulley G
25,000	1	2	3								
35,000	5	4	3								
46,000	8	5	3								
55,000	10	7	4								
65,000	12	15	4								
75,000	12	19	6								
85,000	12	23	9								
95,000	13	24	10								
105,000	15	26	13								

Sample No. 8				Sample No.				Sample No.			
Cycles completed	No. of Visible Wires Broken			Cycles completed	No. of Visible Wires Broken			Cycles completed	No. of Visible Wires Broken		
	Pulley E	Pulley F	Pulley G		Pulley E	Pulley F	Pulley G		Pulley E	Pulley F	Pulley G
25,000	1	2	8								
35,000	1	4	11		SAMPLE 5,	Pulley H,	1 wire	broken at	end of	test.	
45,000	1	4	12								
55,000	1	7	15								
65,000	1	8	16								
75,000	1	10	17								
85,000	2	11	18								
95,000	3	12	19								
107,000	3	12	20								

TABLE 2 (Contd.)

TABLE 2 (Contd.)

TABLE 3

TABLE 3

Progression of Visible Wire Failures

Test Type .....2.....

Cycling Speed ....25..... Cycles/Min. Rope Tension ....140...lb. Stroke ± ..1.50..Inches Pulley Diameter 2.25 Inches

Sample No. 1				Sample No. 2				Sample No. 3			
Cycles completed	No. of Visible Wires Broken			Cycles completed	No. of Visible Wires Broken			Cycles completed	No. of Visible Wires Broken		
	Pulley E	Pulley F	Pulley G		Pulley E	Pulley F	Pulley G		Pulley E	Pulley F	Pulley G
1,800	0	0	0	13,600	1	1	0	16,300	1	1	0
14,875	0	0	0	23,380	2	2	0	22,880	1	2	1
24,540	2	0	2	31,730	6	6	0	30,770	3	3	1
36,430	5	1	3	41,080	10	9	3	38,050	7	5	2
48,500	13	5	5	62,790	19	15	10	47,340	8	8	3
								54,060	14	11	8

Sample No. 4				Sample No. 5				Sample No. 6			
Cycles completed	No. of Visible Wires Broken			Cycles completed	No. of Visible Wires Broken			Cycles completed	No. of Visible Wires Broken		
	Pulley E	Pulley F	Pulley G		Pulley E	Pulley F	Pulley G		Pulley E	Pulley F	Pulley G
1,900	0	0	0	12,460	0	0	0	16,300	0	2	1
12,290	0	0	0	22,230	6	0	1	22,880	0	4	4
24,540	0	3	4	30,610	9	1	5	30,770	1	8	8
36,430	5	5	7	39,970	12	1	5	38,050	4	12	14
48,500	9	10	8	61,680	16	5	15				
56,370	11	16	10								

SAMPLE 1. Pulley H, 1 wire broken at end of test.

SAMPLE 4. Pulley D, 2 wires broken at end of test.

Progression of Visible Wire Failures

Test Type .....3.....

Cycling Speed ....50..... Cycles/Min. Rope Tension .....140...lb. Stroke ± .....1.50.....Inches Pulley Diameter 2.25 .....Inches

Sample No. 1				Sample No. 2				Sample No. 3			
Cycles completed	No. of Visible Wires Broken			Cycles completed	No. of Visible Wires Broken			Cycles completed	No. of Visible Wires Broken		
	Pulley E	Pulley F	Pulley G		Pulley E	Pulley F	Pulley G		Pulley E	Pulley F	Pulley G
38,605	1	1	0	27,790	0	1	3	30,060	1	2	0
50,790	6	1	3	46,700	4	3	3	55,980	5	6	0
64,790	5	2	4	67,090	5	8	9	81,898	12	14	9
78,114	15	8	14	103,260	14	14	10				

Sample No. 4				Sample No. 5				Sample No. 6			
Cycles completed	No. of Visible Wires Broken			Cycles completed	No. of Visible Wires Broken			Cycles completed	No. of Visible Wires Broken		
	Pulley E	Pulley F	Pulley G		Pulley E	Pulley F	Pulley G		Pulley E	Pulley F	Pulley G
38,605	1	4	6	27,790	0	1	4	30,060	1	1	0
50,790	1	8	9	46,700	4	3	7	55,980	3	3	0
64,790	2	11	13	67,090	10	7	14	81,898	10	4	20
78,114	4	15	19	103,260	19	13	23				

SAMPLE 1. Pulley H, 1 wire broken at end of test.
SAMPLE 4. Pulley H, 1 wire broken at end of test.
SAMPLE 6. Pulley D, 1 wire broken at end of test.

TABLE 4

TABLE 4

TABLE 4 (Contd.)

Progression of Visible Wire Failures

Test Type .....3.....

Cycling Speed ...50..... Cycles/Min. Rope Tension .....140...lb. Stroke ± ...1.50...Inches Pulley Diameter 2.25 Inches

Sample No. 7				Sample No.				Sample No.			
Cycles completed	No. of Visible Wires Broken			Cycles completed	No. of Visible Wires Broken			Cycles completed	No. of Visible Wires Broken		
	Pulley E	Pulley F	Pulley G		Pulley E	Pulley F	Pulley G		Pulley E	Pulley F	Pulley G
31,015	3	0	1								
51,242	5	4	3								
61,246	6	6	5								
80,561	13	13	5								

Sample No. 8				Sample No.				Sample No.			
Cycles completed	No. of Visible Wires Broken			Cycles completed	No. of Visible Wires Broken			Cycles completed	No. of Visible Wires Broken		
	Pulley E	Pulley F	Pulley G		Pulley E	Pulley F	Pulley G		Pulley E	Pulley F	Pulley G
31,015	2	1	5								
51,242	6	3	8								
61,246	6	4	12								
80,561	9	6	15								
	SAMPLE 7.	Pulley H,	1 wire broken at end	of test.							

Progression of Visible Wire Failures

Test Type .....4.....

Cycling Speed .....100..... Cycles/Min. Rope Tension ...240....lb. Stroke ± ..1.50..Inches Pulley Diameter 2.25.Inches

Sample No. 1				Sample No. 2				Sample No. 3			
Cycles completed	No. of Visible Wires Broken			Cycles completed	No. of Visible Wires Broken			Cycles completed	No. of Visible Wires Broken		
	Pulley E	Pulley F	Pulley G		Pulley E	Pulley F	Pulley G		Pulley E	Pulley F	Pulley G
15,000	2	2	5	15,000	1	0	1	20,000	2	2	5
20,000	2	2	5	25,000	3	1	5	30,000	4	2	11
31,000	4	4	6	30,000	3	3	7	37,000	5	8	15
43,000	15	8	14	40,000	7	8	9				
				50,000	13	13	13				

Sample No. 4				Sample No. 5				Sample No. 6			
Cycles completed	No. of Visible Wires Broken			Cycles completed	No. of Visible Wires Broken			Cycles completed	No. of Visible Wires Broken		
	Pulley E	Pulley F	Pulley G		Pulley E	Pulley F	Pulley G		Pulley E	Pulley F	Pulley G
11,000	1	1	1	15,000	1	4	4	15,000	0	1	5
15,000	2	1	1	25,000	6	8	10	20,000	0	3	7
25,000	5	1	3	30,000	9	10	19	31,000	2	5	8
34,000	10	11	7					43,000	5	7	12
41,000	19	19	12								

TABLE 5

TABLE 5

TABLE 6

Progression of Visible Wire Failures

Cycling Speed 25 Cycles/Min. Rope Tension 240 lb. Stroke ± 1.50 Inches Test Type 5 Pulley Diameter 2.25 Inches

Sample No. 1				Sample No. 2				Sample No. 3			
Cycles completed	No. of Visible Wires Broken			Cycles completed	No. of Visible Wires Broken			Cycles completed	No. of Visible Wires Broken		
	Pulley E	Pulley F	Pulley G		Pulley E	Pulley F	Pulley G		Pulley E	Pulley F	Pulley G
15,000	3	5	1	17,000	3	5	0	10,000	2	0	1
22,000	10	9	6	21,000	7	8	1	14,000	5	1	1
27,000	18	13	11	23,000	8	16	1	18,000	8	2	3
								22,000	12	4	6
								26,000	14	7	8
								30,000	16	14	12

Sample No. 4				Sample No. 5				Sample No. 6			
Cycles completed	No. of Visible Wires Broken			Cycles completed	No. of Visible Wires Broken			Cycles completed	No. of Visible Wires Broken		
	Pulley E	Pulley F	Pulley G		Pulley E	Pulley F	Pulley G		Pulley E	Pulley F	Pulley G
15,000	1	1	2	17,000	2	6	4	10,000	1	3	0
22,000	5	3	7	21,000	3	9	12	14,000	2	3	0
27,000	11	13	8	23,000	3	14	14	18,000	2	4	2
								22,000	4	7	4
								26,000	4	9	5
								30,000	6	13	6

TABLE 6

Progression of Visible Wire Failures

Test Type 5

Cycling Speed 25 Cycles/Min. Rope Tension 240 lb. Stroke ± 1.50 Inches Pulley Diameter 2.25 Inches

Sample No. 7				Sample No.				Sample No.			
Cycles completed	No. of Visible Wires Broken			Cycles completed	No. of Visible Wires Broken			Cycles completed	No. of Visible Wires Broken		
	Pulley E	Pulley F	Pulley G		Pulley E	Pulley F	Pulley G		Pulley E	Pulley F	Pulley G
9,000	0	0	2		SAMPLE 7	) Pulley	D, 1 Wire	broken at end of test.			
38,000	21	21	36			) Pulley	H, 1 Wire	broken at end of test.			
					SAMPLE 8	) Pulley	D, 2 Wires	broken at end of test.			
						) Pulley	H, 2 Wires	broken at end of test.			

Sample No. 8				Sample No.				Sample No.			
Cycles completed	No. of Visible Wires Broken			Cycles completed	No. of Visible Wires Broken			Cycles completed	No. of Visible Wires Broken		
	Pulley E	Pulley F	Pulley G		Pulley E	Pulley F	Pulley G		Pulley E	Pulley F	Pulley G
9,000	1	0	0								
38,000	27	13	13								

TABLE 6 (Contd.)

TABLE 6(Contd.)

TABLE 7

Progression of Visible Wire Failures

Test Type 6

Cycling Speed 50 Cycles/Min. Rope Tension 240 lb. Stroke ± 1.50 Inches Pulley Diameter 2.25 Inches

Sample No. 1				Sample No. 2				Sample No. 3			
Cycles completed	No. of Visible Wires Broken			Cycles completed	No. of Visible Wires Broken			Cycles completed	No. of Visible Wires Broken		
	Pulley E	Pulley F	Pulley G		Pulley E	Pulley F	Pulley G		Pulley E	Pulley F	Pulley G
14,000	4	1	2	14,000	3	3	1	15,000	1	5	0
21,000	6	1	3	20,000	3	8	2	20,000	2	9	0
28,000	11	6	4	26,000	5	10	3	25,000	3	11	0
31,000	15	7	7	31,000	6	12	4	30,000	5	12	1

Sample No. 4				Sample No. 5				Sample No. 6			
Cycles completed	No. of Visible Wires Broken			Cycles completed	No. of Visible Wires Broken			Cycles completed	No. of Visible Wires Broken		
	Pulley E	Pulley F	Pulley G		Pulley E	Pulley F	Pulley G		Pulley E	Pulley F	Pulley G
14,000	0	0	2	15,000	1	1	0	15,000	3	0	1
22,000	1	4	4	20,000	3	5	2	20,000	5	0	2
30,000	2	5	4	25,000	6	7	4	26,000	7	0	4
37,000	7	8	9	30,000	8	8	6	31,000	7	1	5
43,000	8	12	12	35,000	13	8	11	36,000	8	5	7
								42,000	13	6	15

SAMPLE 1,) Pulley D, 3 wires broken at end of test.

) Pulley H, 1 wire broken at end of test.

SAMPLE 6, Pulley D, 1 wire broken at end of test.

Progression of Visible Wire Failures

Test Type 7

Cycling Speed 100 Cycles/Min. Rope Tension 360 lb. Stroke ± 1.50 Inches Pulley Diameter 2.25 Inches

Sample No. 1				Sample No. 2				Sample No. 3			
Cycles completed	No. of Visible Wires Broken			Cycles completed	No. of Visible Wires Broken			Cycles completed	No. of Visible Wires Broken		
	Pulley E	Pulley F	Pulley G		Pulley E	Pulley F	Pulley G		Pulley E	Pulley F	Pulley G
10,000	0	8	0	9,000	2	3	2	8,000	1	2	1
13,000	0	8	0	13,000	5	9	5	12,000	3	3	3
18,000	1	15	5	17,000	15	10	7	18,000	5	7	7
								26,000	7	10	11
								31,000	10	14	14

Sample No. 4				Sample No. 5				Sample No. 6			
Cycles completed	No. of Visible Wires Broken			Cycles completed	No. of Visible Wires Broken			Cycles completed	No. of Visible Wires Broken		
	Pulley E	Pulley F	Pulley G		Pulley E	Pulley F	Pulley G		Pulley E	Pulley F	Pulley G
10,000	0	2	7	9,000	2	4	7	8,000	0	1	0
13,000	0	3	7	13,000	2	8	11	12,000	0	1	0
18,000	1	7	13	17,000	2	11	19	18,000	1	5	4
								26,000	11	15	8
								31,000	12	21	9

TABLE 8

TABLE 9

TABLE 9

Progression of Visible Wire Failures

Cycling Speed ....25..... Cycles/Min. Rope Tension ....360°.....lb. Stroke ± 1.50.....Inches Test Type ....8..... Pulley Diameter 2.25....Inches

Sample No. 1				Sample No. 2				Sample No. 3			
Cycles completed	No. of Visible Wires Broken			Cycles completed	No. of Visible Wires Broken			Cycles completed	No. of Visible Wires Broken		
	Pulley E	Pulley F	Pulley G		Pulley E	Pulley F	Pulley G		Pulley E	Pulley F	Pulley G
10,000	1	1	2	10,000	3	5	2	10,000	2	3	2
15,000	5	6	10	15,000	11	7	5	15,000	5	8	4
18,000	14	10	17	19,000	21	10	4	18,000	6	11	5
								21,000	10	12	10

Sample No. 4				Sample No. 5				Sample No. 6			
Cycles completed	No. of Visible Wires Broken			Cycles completed	No. of Visible Wires Broken			Cycles completed	No. of Visible Wires Broken		
	Pulley E	Pulley F	Pulley G		Pulley E	Pulley F	Pulley G		Pulley E	Pulley F	Pulley G
10,000	1	3	1	10,000	2	2	1	10,000	4	3	1
15,000	13	6	8	15,000	5	8	7	15,000	7	17	6
18,000	21	8	20	19,000	11	12	10				

Progression of Visible Wire Failures

Test Type 9

Cycling Speed 50 Cycles/Min. Rope Tension 360 lb. Stroke ± 1.50 Inches Pulley Diameter 2.25 Inches

Sample No. 1				Sample No. 2				Sample No. 3			
Cycles completed	No. of Visible Wires Broken			Cycles completed	No. of Visible Wires Broken			Cycles completed	No. of Visible Wires Broken		
	Pulley E	Pulley F	Pulley G		Pulley E	Pulley F	Pulley G		Pulley E	Pulley F	Pulley G
11,000	5	4	3	11,000	3	8	2	10,000	1	3	2
15,000	6	6	5	16,000	4	14	3	16,000	4	13	10
20,000	14	14	8								

Sample No. 4				Sample No. 5				Sample No. 6			
Cycles completed	No. of Visible Wires Broken			Cycles completed	No. of Visible Wires Broken			Cycles completed	No. of Visible Wires Broken		
	Pulley E	Pulley F	Pulley G		Pulley E	Pulley F	Pulley G		Pulley E	Pulley F	Pulley G
11,000	1	1	5	11,000	4	9	0	10,000	0	7	1
15,000	7	8	12	16,000	7	18	5	16,000	7	16	2
20,000	11	14	21								

TABLE 10

TABLE 10

TABLE 11

TABLE 11

Progression of Visible Wire Failures

Test Type ....10.....

Cycling Speed ...100..... Cycles/Min. Rope Tension ...140....lb. Stroke ± ..1.67..Inches Pulley Diameter .2.50.Inches

Sample No. 1				Sample No. 2				Sample No. 3			
Cycles completed	No. of Visible Wires Broken			Cycles completed	No. of Visible Wires Broken			Cycles completed	No. of Visible Wires Broken		
	Pulley F	Pulley F	Pulley G		Pulley E	Pulley F	Pulley G		Pulley E	Pulley F	Pulley G
30,000	0	3	1	40,000	0	4	1	40,000	2	1	1
45,000	3	4	4	65,000	0	7	1	65,000	3	2	1
58,000	3	4	6	80,000	1	10	1	84,000	4	4	4
80,000	3	5	7	90,000	2	10	1	105,000	4	5	4
100,000	5	7	9	100,000	3	10	2	125,000	5	7	7
113,000	5	9	10	148,000	3	11	3	145,000	5	7	11
125,000	5	9	13	173,000	4	12	4	160,000	8	7	12

Sample No. 4				Sample No. 5				Sample No. 6			
Cycles completed	No. of Visible Wires Broken			Cycles completed	No. of Visible Wires Broken			Cycles completed	No. of Visible Wires Broken		
	Pulley E	Pulley F	Pulley G		Pulley E	Pulley F	Pulley G		Pulley E	Pulley F	Pulley G
30,000	0	1	0	40,000	1	4	2	40,000	1	2	4
45,000	2	2	1	65,000	5	8	3	65,000	2	2	6
58,000	2	2	1	80,000	7	11	5	80,000	2	4	6
80,000	2	2	4	90,000	7	12	5	95,000	2	4	7
100,000	2	10	5	100,000	8	13	7	115,000	3	4	8
113,000	2	12	7					135,000	9	4	8
125,000	2	14	10					150,000	10	5	8
								170,000	12	7	9

Progression of Visible Wire Failures

Test Type ..11.....

Cycling Speed ..25..... Cycles/Min. Rope Tension ..140.....lb. Stroke ± ...1.67.Inches Pulley Diameter 2.50 Inches

Sample No. 1				Sample No. 2				Sample No. 3			
Cycles completed	No. of Visible Wires Broken			Cycles completed	No. of Visible Wires Broken			Cycles completed	No. of Visible Wires Broken		
	Pulley E	Pulley F	Pulley G		Pulley E	Pulley F	Pulley G		Pulley E	Pulley F	Pulley G
31,320	0	5	3	27,784	3	3	0	10,700	0	0	0
64,032	9	14	26	30,447	3	3	0	17,890	0	1	0
				41,510	4	6	4	41,602	0	1	2
				52,518	6	6	10	49,710	3	1	3
				62,014	8	7	13	57,140	5	4	4
								60,120	6	5	4
								65,420	6	6	5
								73,960	9	10	7
								106,302	16	17	9

Sample No. 4				Sample No. 5				Sample No. 6			
Cycles completed	No. of Visible Wires Broken			Cycles completed	No. of Visible Wires Broken			Cycles completed	No. of Visible Wires Broken		
	Pulley E	Pulley F	Pulley G		Pulley E	Pulley F	Pulley G		Pulley E	Pulley F	Pulley G
31,320	5	4	1	15,816	1	1	0	7,430	0	0	0
64,031	23	7	6	28,406	4	4	1	10,370	0	0	0
				38,208	11	6	1	15,720	0	0	1
				45,314	12	8	1	24,070	6	0	3
								56,567	19	3	1[illegible]
SAMPLE 4. Pulley D, 3 wires broken at end of test.											

TABLE 12

TABLE 12 (Contd.)

TABLE 12 (Contd.)

Progression of Visible Wire Failures

Test Type ..11.....

Cycling Speed ...25..... Cycles/Min. Rope Tension ...140....lb. Stroke ± ..1.67..Inches Pulley Diameter 2.50 Inches

Sample No. 7				Sample No.				Sample No.			
Cycles completed	No. of Visible Wires Broken			Cycles completed	No. of Visible Wires Broken			Cycles completed	No. of Visible Wires Broken		
	Pulley E	Pulley F	Pulley G		Pulley E	Pulley F	Pulley G		Pulley E	Pulley F	Pulley G
86,913	19	20	17								

Sample No. 8				Sample No.				Sample No.			
Cycles completed	No. of Visible Wires Broken			Cycles completed	No. of Visible Wires Broken			Cycles completed	No. of Visible Wires Broken		
	Pulley E	Pulley F	Pulley G		Pulley E	Pulley F	Pulley G		Pulley E	Pulley F	Pulley G
86,913	15	15	18								
SAMPLE 8.	Pulley D, 3 wires broken at end of test.										

LABS/20/68

Progression of Visible Wire Failures

Test Type .12.....

Cycling Speed ....50..... Cycles/Min. Rope Tension ....140....lb. Stroke ± .1.67...Inches Pulley Diameter 2.50.Inches

Sample No. 1				Sample No. 2				Sample No. 3			
Cycles completed	No. of Visible Wires Broken			Cycles completed	No. of Visible Wires Broken			Cycles completed	No. of Visible Wires Broken		
	Pulley E	Pulley F	Pulley G		Pulley E	Pulley F	Pulley G		Pulley E	Pulley F	Pulley G
40,130	2	2	0	62,402	8	13	3	19,834	0	2	0
92,610	6	7	7	78,308	10	15	5	37,307	1	5	1
111,973	11	10	9	98,880	13	16	8	53,350	1	7	4
130,000	13	12	11	111,127	15	18	10	73,250	3	10	9
147,077	16	15	16					91,100	9	10	12
162,854	19	19	17								

Sample No. 4				Sample No. 5				Sample No. 6			
Cycles completed	No. of Visible Wires Broken			Cycles completed	No. of Visible Wires Broken			Cycles completed	No. of Visible Wires Broken		
	Pulley E	Pulley F	Pulley G		Pulley E	Pulley F	Pulley G		Pulley E	Pulley F	Pulley G
40,130	0	0	3	62,402	1	6	4	19,834	1	0	0
92,610	4	7	8	78,308	5	8	6	37,307	3	1	4
111,973	5	8	11	98,880	9	12	10	53,350	8	6	6
130,000	7	9	13	111,127	15	16	13	73,250	10	13	10
147,077	11	10	15					91,100	12	17	11
162,854	14	11	16								

TABLE 13

TABLE 13

Progression of Visible Wire Failures

Test Type 12 Continued

Cycling Speed .....50..... Cycles/Min. Rope Tension ..140.....lb. Stroke ± ..1.67...Inches Pulley Diameter 2.50 Inches

Sample No. 7				Sample No.				Sample No.			
Cycles completed	No. of Visible Wires Broken			Cycles completed	No. of Visible Wires Broken			Cycles completed	No. of Visible Wires Broken		
	Pulley E	Pulley F	Pulley G		Pulley E	Pulley F	Pulley G		Pulley E	Pulley F	Pulley G
17,050	0	1	0								
30,085	1	2	0								
43,780	2	2	0								
63,340	6	4	0								
84,780	11	4	5								
99,872	16	5	6								

Sample No. 8				Sample No.				Sample No.			
Cycles completed	No. of Visible Wires Broken			Cycles completed	No. of Visible Wires Broken			Cycles completed	No. of Visible Wires Broken		
	Pulley E	Pulley F	Pulley G		Pulley E	Pulley F	Pulley G		Pulley E	Pulley F	Pulley G
17,050	1	0	0								
30,085	2	1	2								
43,780	3	1	2								
63,340	4	3	4								
84,780	10	8	8								
99,872	16	14	15								

TABLE 13 (Contd.)

Progression of Visible Wire Failures

Test Type ....13.....

Cycling Speed ....100..... Cycles/Min. Rope Tension ....240.....lb. Stroke ± ..1.67..Inches Pulley Diameter 2.50..Inches

Sample No. 1				Sample No. 2				Sample No. 3			
Cycles completed	No. of Visible Wires Broken			Cycles completed	No. of Visible Wires Broken			Cycles completed	No. of Visible Wires Broken		
	Pulley E	Pulley F	Pulley G		Pulley E	Pulley F	Pulley G		Pulley E	Pulley F	Pulley G
15,081	2	3	0	40,015	6	4	0	30,018	1	3	2
20,020	2	3	2	60,069	9	8	1	46,032	2	9	6
30,227	3	4	4	81,017	11	12	5	61,052	3	13	6
45,069	3	7	4								
61,026	4	10	8								
76,203	10	15	12								
81,180	14	17	14								

Sample No. 4				Sample No. 5				Sample No. 6			
Cycles completed	No. of Visible Wires Broken			Cycles completed	No. of Visible Wires Broken			Cycles completed	No. of Visible Wires Broken		
	Pulley E	Pulley F	Pulley G		Pulley E	Pulley F	Pulley G		Pulley E	Pulley F	Pulley G
15,086	0	3	0	40,015	0	3	2	30,018	4	5	4
20,025	0	4	2	60,067	4	4	8	46,032	8	14	6
30,231	0	5	4	81,014	6	7	21	61,051	12	17	8
45,071	3	6	5								
61,028	3	7	6								
76,205	6	11	8								
81,181	9	12	11								

TABLE 14

TABLE 14

TABLE 15

TABLE 15

Progression of Visible Wire Failures

Test Type ...14.....

Cycling Speed ....25..... Cycles/Min. Rope Tension ..240.....lb. Stroke ± .1.67...Inches Pulley Diameter 2.50.Inches

Sample No. 1				Sample No. 2				Sample No. 3			
Cycles completed	No. of Visible Wires Broken			Cycles completed	No. of Visible Wires Broken			Cycles completed	No. of Visible Wires Broken		
	Pulley E	Pulley F	Pulley G		Pulley E	Pulley F	Pulley G		Pulley E	Pulley F	Pulley G
25,000	11	6	4	22,000	3	6	5	10,000	1	0	1
31,000	17	12	6	28,000	6	13	9	15,000	4	1	3
33,000	20	15	7					20,000	4	3	3
								26,000	7	9	8
								30,000	14	14	10

Sample No. 4				Sample No. 5				Sample No. 6			
Cycles completed	No. of Visible Wires Broken			Cycles completed	No. of Visible Wires Broken			Cycles completed	No. of Visible Wires Broken		
	Pulley E	Pulley F	Pulley G		Pulley E	Pulley F	Pulley G		Pulley E	Pulley F	Pulley G
25,000	2	7	5	22,000	6	4	10	15,000	0	0	1
31,000	3	10	7	28,000	6	7	17	20,000	1	0	3
33,000	3	15	8					25,000	2	0	5
								30,000	3	2	8
								35,000	7	3	9
								40,000	11	6	10
								46,000	14	12	16

SAMPLE 6, Pulley D, 1 wire broken at end of test.

Progression of Visible Wire Failures

Test Type ...15.....

Cycling Speed ...50..... Cycles/Min. Rope Tension ....240....lb. Stroke ± ..1.67...Inches Pulley Diameter 2.50 Inches

Sample No. 1				Sample No. 2				Sample No. 3			
Cycles completed	No. of Visible Wires Broken			Cycles completed	No. of Visible Wires Broken			Cycles completed	No. of Visible Wires Broken		
	Pulley E	Pulley F	Pulley G		Pulley E	Pulley F	Pulley G		Pulley E	Pulley F	Pulley G
15,150	1	0	2	15,033	3	2	0	15,039	0	1	0
20,315	2	0	5	21,004	7	3	1	20,002	2	2	3
25,030	5	6	5	25,004	10	4	2	25,003	6	3	3
30,004	7	10	5	31,004	16	6	3	30,008	8	4	3
35,023	10	10	7					35,004	13	7	5
40,014	11	13	8								

Sample No. 4				Sample No. 5				Sample No. 6			
Cycles completed	No. of Visible Wires Broken			Cycles completed	No. of Visible Wires Broken			Cycles completed	No. of Visible Wires Broken		
	Pulley E	Pulley F	Pulley G		Pulley E	Pulley F	Pulley G		Pulley E	Pulley F	Pulley G
15,150	2	0	0	15,004	0	0	1	15,091	0	1	1
20,315	4	3	8	20,006	3	2	2	21,055	0	1	6
25,030	5	6	14	25,003	4	4	2	26,060	1	2	18
				32,195	5	7	2				
				35,125	7	7	5				
				40,000	8	10	8				
				45,325	8	12	12				

TABLE 16

TABLE 17

Progression of Visible Wire Failures

Test Type ....16....

Cycling Speed ....100.... Cycles/Min. Rope Tension ....360....lb. Stroke ± ....1.67....Inches Pulley Diameter ....2.50....Inches

Sample No. 1				Sample No. 2				Sample No. 3			
Cycles completed	No. of Visible Wires Broken			Cycles completed	No. of Visible Wires Broken			Cycles completed	No. of Visible Wires Broken		
	Pulley E	Pulley F	Pulley G		Pulley E	Pulley F	Pulley G		Pulley E	Pulley F	Pulley G
10,000	0	1	0	10,000	1	1	0	10,000	5	1	4
15,000	1	4	3	15,000	1	5	2	15,000	9	1	9
20,000	4	7	4	21,000	1	6	4	20,000	11	2	10
25,000	4	10	6	26,000	2	8	5	25,000	14	5	15
30,000	5	10	11	31,000	5	9	8				
35,000	6	15	16	37,000	5	11	13				

Sample No. 4				Sample No. 5				Sample No. 6			
Cycles completed	No. of Visible Wires Broken			Cycles completed	No. of Visible Wires Broken			Cycles completed	No. of Visible Wires Broken		
	Pulley E	Pulley F	Pulley G		Pulley E	Pulley F	Pulley G		Pulley E	Pulley F	Pulley G
10,000	5	0	3	10,000	1	2	2	10,000	1	0	0
15,000	14	1	7	15,000	2	5	2	15,000	2	1	4
20,000	18	3	11	21,000	7	8	6	20,000	2	2	5
				26,000	8	15	9	25,000	6	9	8
				31,000	11	21	12	30,000	6	11	11
								35,000	8	14	15

TABLE 17

Progression of Visible Wire Failures

Test Type .....17.....

Cycling Speed .....25..... Cycles/Min. Rope Tension .....360.....lb. Stroke ± .....1.67.....Inches Pulley Diameter .....2.50.....Inches

Sample No. 1				Sample No. 2				Sample No. 3			
Cycles completed	No. of Visible Wires Broken			Cycles completed	No. of Visible Wires Broken			Cycles completed	No. of Visible Wires Broken		
	Pulley E	Pulley F	Pulley G		Pulley E	Pulley F	Pulley G		Pulley E	Pulley F	Pulley G
10,000	5	1	1	10,000	3	3	0	10,000	1	0	0
15,000	10	8	4	15,000	7	8	0	15,000	6	3	3
18,000	16	12	11	20,000	12	10	4	20,000	9	10	7
								25,000	13	16	12

Sample No. 4				Sample No. 5				Sample No. 6			
Cycles completed	No. of Visible Wires Broken			Cycles completed	No. of Visible Wires Broken			Cycles completed	No. of Visible Wires Broken		
	Pulley E	Pulley F	Pulley G		Pulley E	Pulley F	Pulley G		Pulley E	Pulley F	Pulley G
10,000	0	2	0	10,000	1	6	5	10,000	2	2	5
15,000	1	11	3	15,000	8	10	14	15,000	7	5	13
18,000	5	17	6								

TABLE 18

TABLE 19

TABLE 19

Progression of Visible Wire Failures

Cycling Speed ...50..... Cycles/Min. Rope Tension ...360....lb. Stroke ± ..1.67..Inches Test Type .....18..... Pulley Diameter 2.50 Inches

Sample No. 1				Sample No. 2				Sample No. 3			
Cycles completed	No. of Visible Wires Broken			Cycles completed	No. of Visible Wires Broken			Cycles completed	No. of Visible Wires Broken		
	Pulley E	Pulley F	Pulley G		Pulley E	Pulley F	Pulley G		Pulley E	Pulley F	Pulley G
10,000	0	6	0	10,000	6	2	3	10,000	0	10	0
15,000	6	21	2	12,000	6	4	4	14,000	0	14	4
				14,000	7	4	6				
				16,000	8	4	8				
				18,000	9	5	11				
				20,000	10	8	13				

Sample No. 4				Sample No. 5				Sample No. 6			
Cycles completed	No. of Visible Wires Broken			Cycles completed	No. of Visible Wires Broken			Cycles completed	No. of Visible Wires Broken		
	Pulley E	Pulley F	Pulley G		Pulley E	Pulley F	Pulley G		Pulley E	Pulley F	Pulley G
10,000	0	4	2	10,000	0	2	0	10,000	0	2	2
15,000	2	8	8	15,000	4	6	1	15,000	3	11	6
20,000	7	16	14	17,000	7	9	3	18,000	3	13	7
				20,000	8	11	6				
				22,000	8	12	6				

Progression of Visible Wire Failures

Test Type ...19.....

Cycling Speed ....100..... Cycles/Min. Rope Tension ...140.....lb. Stroke ± ...1.83.Inches Pulley Diameter ...2.75Inches

Sample No. 1				Sample No. 2				Sample No. 3			
Cycles completed	No. of Visible Wires Broken			Cycles completed	No. of Visible Wires Broken			Cycles completed	No. of Visible Wires Broken		
	Pulley E	Pulley F	Pulley G		Pulley E	Pulley F	Pulley G		Pulley E	Pulley F	Pulley G
100,000	0	0	1	150,000	1	0	5	150,000	1	0	1
160,000	0	0	2	260,000	6	1	11	260,000	1	0	3
250,000	2	0	3	400,000	15	1	14	400,000	1	0	6
320,000	6	1	6	427,000	17	1	14	550,000	5	0	10
401,000	7	1	9					601,000	6	2	13
500,000	11	2	15								

Sample No. 4				Sample No. 5				Sample No. 6			
Cycles completed	No. of Visible Wires Broken			Cycles completed	No. of Visible Wires Broken			Cycles completed	No. of Visible Wires Broken		
	Pulley E	Pulley F	Pulley G		Pulley E	Pulley F	Pulley G		Pulley E	Pulley F	Pulley G
160,000	1	0	0	150,000	2	1	0	150,000	0	4	1
251,000	1	0	2	260,000	4	1	3	260,000	3	6	3
320,000	2	0	4	400,000	9	6	9	400,000	6	10	8
401,000	6	2	5	427,000	11	6	12	438,000	6	13	10
500,000	16	2	8								

TABLE 20

TABLE 21

Progression of Visible Wire Failures

Test Type .....20.....

Cycling Speed ....25..... Cycles/Min. Rope Tension ....140.....lb. Stroke ± ....1.83....Inches Pulley Diameter ....2.75....Inches

Sample No. 1

Cycles completed	No. of Visible Wires Broken		
	Pulley E	Pulley F	Pulley G
90,720	3	0	0
101,070	4	1	0
132,770	7	2	2
166,970	11	4	4
174,170	12	4	6
184,470	13	5	7
199,840	15	5	7

Sample No. 2

Cycles completed	No. of Visible Wires Broken		
	Pulley E	Pulley F	Pulley G
82,130	0	4	1
90,720	4	4	2
101.070	5	4	3
132,770	6	5	3
166,970	9	8	4
174,170	9	8	4
184,470	9	9	4
199,480	9	11	4
210,460	9	12	4

Sample No. 3

Cycles completed	No. of Visible Wires Broken		
	Pulley E	Pulley F	Pulley G
63,660	0	0	0
123,030	0	0	0
133,324	0	6	4
141,174	0	6	4
151,904	0	7	5
162,900	2	9	5
171,800	3	19	6

Sample No. 4

Cycles completed	No. of Visible Wires Broken		
	Pulley E	Pulley F	Pulley G
40,615	1	0	0
60,423	3	0	1
99,010	4	1	1
128,050	5	5	2
138,684	5	5	4
177,893	6	7	5
190,870	6	8	5
215,150	6	10	5
245,860	10	12	9

Sample No. 5

Cycles completed	No. of Visible Wires Broken		
	Pulley E	Pulley F	Pulley G
45,200	1	0	0
52,650	2	0	0
62,000	2	0	1
71,615	3	0	2
114,740	5	1	7
122,230	7	1	7
154,014	8	1	12

Sample No. 6

Cycles completed	No. of Visible Wires Broken		
	Pulley E	Pulley F	Pulley G
62,120	0	0	0
69,580	1	2	3
101,365	3	5	5
114,196	4	8	8
153,165	7	13	17

Progression of Visible Wire Failures

Test Type 20 Continued

Cycling Speed 25 Cycles/Min. Rope Tension 140 lb. Stroke ± 1.83 Inches Pulley Diameter 2.75 Inches

Sample No. 7				Sample No.				Sample No.			
Cycles completed	No. of Visible Wires Broken			Cycles completed	No. of Visible Wires Broken			Cycles completed	No. of Visible Wires Broken		
	Pulley E	Pulley F	Pulley G		Pulley E	Pulley F	Pulley G		Pulley E	Pulley F	Pulley G
51,631	2	0	3								
59,437	3	1	3								
94,650	6	1	7								
107,060	7	4	11								
137,916	7	8	16								
146,500	7	9	19								
149,970	7	9	20								
177,160	8	9	27								
240,597	8	13	31								

Sample No. 8				Sample No.				Sample No.			
Cycles completed	No. of Visible Wires Broken			Cycles completed	No. of Visible Wires Broken			Cycles completed	No. of Visible Wires Broken		
	Pulley E	Pulley F	Pulley G		Pulley E	Pulley F	Pulley G		Pulley E	Pulley F	Pulley G
55,390	0	0	2								
86,247	2	3	4								
94,830	3	3	4	Sample 2. Pulley H, 1 wire broken at end of test							
98,300	3	3	4	Sample 4. Pulley H, 1 wire broken at end of test							
125,490	3	4	5	Sample 6. (Pulley H, 1 wire broken at end of test							
158,840	5	8	8	(Pulley D, 1 wire broken at end of test							
188,928	7	10	9	Sample 7. Pulley D, 2 wires broken at end of test							
221,135	18	13	13	Sample 8. Pulley D, 1 wire broken at end of test							

TABLE 21 (Contd.)

TABLE 22

TABLE 22

Progression of Visible Wire Failures

Test Type ....21....

Cycling Speed ....50.... Cycles/Min. Rope Tension ....140....lb. Stroke ± ....1.83....Inches Pulley Diameter ....2.75....Inches

Sample No. 1				Sample No. 2				Sample No. 3			
Cycles completed	No. of Visible Wires Broken			Cycles completed	No. of Visible Wires Broken			Cycles completed	No. of Visible Wires Broken		
	Pulley E	Pulley F	Pulley G		Pulley E	Pulley F	Pulley G		Pulley E	Pulley F	Pulley G
114,829	5	1	4	95,910	0	2	1	34,270	1	0	0
133,308	7	2	5	115,933	0	3	1	61,530	1	1	0
150,110	8	2	5	185,150	1	4	4	80,510	1	2	0
180,143	8	4	7	261,000	1	6	4	105,350	2	3	0
211,042	9	5	7	264,832	1	7	4	169,750	4	5	1
228,100	10	6	7	328,321	2	9	5	190,770	5	7	1
240,950	11	7	8	343,346	3	9	5	245,610	10	10	4
261,600	11	10	8	391,650	5	13	6	249,442	11	10	4
278,200	12	11	9					312,917	15	10	6

Sample No. 4				Sample No. 5				Sample No. 6			
Cycles completed	No. of Visible Wires Broken			Cycles completed	No. of Visible Wires Broken			Cycles completed	No. of Visible Wires Broken		
	Pulley E	Pulley F	Pulley G		Pulley E	Pulley F	Pulley G		Pulley E	Pulley F	Pulley G
70,929	1	0	2	92,690	2	3	0	35,318	1	0	0
95,150	6	1	4	118,095	3	3	1	64,164	3	0	1
123,570	11	4	5	146,943	4	3	2	107,568	8	1	4
146,108	14	4	7	238,005	4	4	12	155,226	14	5	11

Progression of Visible Wire Failures

Cycling Speed 100 Cycles/Min. Rope Tension 240 lb. Stroke ± 1.83 Inches Test Type 22 Pulley Diameter 2.75 Inches

Sample No. 1				Sample No. 2				Sample No. 3			
Cycles completed	No. of Visible Wires Broken			Cycles completed	No. of Visible Wires Broken			Cycles completed	No. of Visible Wires Broken		
	Pulley E	Pulley F	Pulley G		Pulley E	Pulley F	Pulley G		Pulley E	Pulley F	Pulley G
40,000	1	0	2	45,000	2	4	6	40,000	1	0	2
50,000	1	0	4	60,000	4	4	9	60,000	1	0	3
65,000	1	1	7	75,000	4	7	14	90,000	5	1	6
80,000	1	3	8					120,000	11	4	8
95,000	1	6	10					130,000	11	4	9
110,000	2	10	11					148,000	12	9	12
125,000	5	12	11								

Sample No. 4				Sample No. 5				Sample No. 6			
Cycles completed	No. of Visible Wires Broken			Cycles completed	No. of Visible Wires Broken			Cycles completed	No. of Visible Wires Broken		
	Pulley E	Pulley F	Pulley G		Pulley E	Pulley F	Pulley G		Pulley E	Pulley F	Pulley G
30,000	0	0	2	45,000	8	4	5	45,000	3	2	0
40,000	1	2	4	60,000	11	8	9	60,000	4	2	1
52,000	3	4	6	75,000	13	9	11	80,000	8	4	1
65,000	4	4	9					100,000	13	6	5
75,000	4	6	11								
82,000	6	8	12								

TABLE 23

TABLE 23

Progression of Visible Wire Failures

Cycling Speed ....25..... Cycles/Min. Rope Tension ....240.....lb. Stroke ± 1.83....Inches Test Type ....23..... Pulley Diameter 2.75 Inches

Sample No. 1

Cycles completed	No. of Visible Wires Broken		
	Pulley E	Pulley F	Pulley G
35,000	13	4	2
42,000	15	4	3
51,000	16	6	4
60,000	16	7	5
77,000	16	8	8

Sample No. 2

Cycles completed	No. of Visible Wires Broken		
	Pulley E	Pulley F	Pulley G
20,000	3	0	1
32,000	4	1	3
42,000	10	2	3
53,000	14	3	5
64,000	14	4	8
76,000	14	5	13
87,000	14	7	13

Sample No. 3

Cycles completed	No. of Visible Wires Broken		
	Pulley E	Pulley F	Pulley G
25,000	4	2	1
36,000	4	6	2
45,000	4	10	4
56,000	8	14	4
66,000	17	14	8

Sample No. 4

Cycles completed	No. of Visible Wires Broken		
	Pulley E	Pulley F	Pulley G
35,000	2	2	4
42,000	3	3	5
51,000	3	5	6
60,000	4	5	7
68,000	5	10	7
77,000	7	12	8

Sample 4. Pulley D, 1 wire broken at end of test.

Sample No. 5

Cycles completed	No. of Visible Wires Broken		
	Pulley E	Pulley F	Pulley G
42,000	3	4	0
53,000	5	5	1
64,000	6	6	1
76,000	7	10	2
87,000	8	16	2

Sample No. 6

Cycles completed	No. of Visible Wires Broken		
	Pulley E	Pulley F	Pulley G
25,000	1	0	0
36,000	3	1	0
45,000	6	3	1
56,000	9	6	2
66,000	15	7	3

TABLE 24

Progression of Visible Wire Failures

Test Type ....24....

Cycling Speed ....50..... Cycles/Min. Rope Tension ....240....lb. Stroke ± .1.83...Inches Pulley Diameter 2.75.Inches

Sample No. 1				Sample No. 2				Sample No. 3			
Cycles completed	No. of Visible Wires Broken			Cycles completed	No. of Visible Wires Broken			Cycles completed	No. of Visible Wires Broken		
	Pulley E	Pulley F	Pulley G		Pulley E	Pulley F	Pulley G		Pulley E	Pulley F	Pulley G
25,000	1	1	1	35,000	4	0	1	35,000	1	1	1
35,000	1	1	2	50,000	9	2	3	55,000	3	5	4
50,000	2	1	2	60,000	9	3	6	70,000	6	9	8
65,000	3	3	2	70,000	12	5	6	85,000	8	12	11
80,000	5	6	5								
95,000	8	10	10								
110,000	9	12	15								

Sample No. 4				Sample No. 5				Sample No. 6			
Cycles completed	No. of Visible Wires Broken			Cycles completed	No. of Visible Wires Broken			Cycles completed	No. of Visible Wires Broken		
	Pulley E	Pulley F	Pulley G		Pulley E	Pulley F	Pulley G		Pulley E	Pulley F	Pulley G
35,000	1	0	1	35,000	1	0	1	35,000	1	0	0
50,000	2	2	2	50,000	9	0	4	55,000	3	4	1
65,000	3	2	6	60,000	12	2	5	70,000	4	5	4
80,000	8	4	12	70,000	14	2	5	85,000	8	6	7
95,000	9	5	18					101,000	13	8	10
110,000	11	7	18								
Sample 3.	Pulley D, 2 wires broken at end of test.										

TABLE 25

TABLE 25

TABLE 26

TABLE 26

Progression of Visible Wire Failures

Cycling Speed ....100.... Cycles/Min. Rope Tension ....360....lb. Stroke ± ....1.83....Inches Test Type ....25.... Pulley Diameter ....2.75....Inches

Sample No. 1				Sample No. 2				Sample No. 3			
Cycles completed	No. of Visible Wires Broken			Cycles completed	No. of Visible Wires Broken			Cycles completed	No. of Visible Wires Broken		
	Pulley E	Pulley F	Pulley G		Pulley E	Pulley F	Pulley G		Pulley E	Pulley F	Pulley G
20,000	0	0	1	18,000	3	2	2	20,000	1	0	1
26,000	8	1	4	24,000	4	3	2	26,000	4	2	5
32,000	12	8	8	31,000	4	4	3	33,000	6	7	7
				37,000	4	5	5	40,000	7	10	8
				44,000	6	10	10	43,000	9	11	9
				49,000	6	13	12	49,000	10	16	14

Sample No. 4				Sample No. 5				Sample No. 6			
Cycles completed	No. of Visible Wires Broken			Cycles completed	No. of Visible Wires Broken			Cycles completed	No. of Visible Wires Broken		
	Pulley E	Pulley F	Pulley G		Pulley E	Pulley F	Pulley G		Pulley E	Pulley F	Pulley G
20,000	2	6	6	18,000	0	1	2	20,000	0	5	4
26,000	5	8	11	24,000	2	3	4	26,000	3	10	7
32,000	7	11	15	31,000	5	7	9	33,000	6	16	12
				37,000	6	7	12				
				44,000	9	7	13				
				49,000	13	9	16				

Progression of Visible Wire Failures

Test Type .....26.....

Cycling Speed .....25..... cles/Min. Rope Tension .....360.....lb. Stroke ± .....1.83.....Inches Pulley Diameter 2.75 .....Inches

Sample No. 1				Sample No. 2				Sample No. 3			
Cycles completed	No. of Visible Wires Broken			Cycles completed	No. of Visible Wires Broken			Cycles completed	No. of Visible Wires Broken		
	Pulley E	Pulley F	Pulley G		Pulley E	Pulley F	Pulley G		Pulley E	Pulley F	Pulley G
25,000	4	3	5	25,000	1	6	4	23,000	5	2	3
35,000	8	8	15	30,000	3	13	6	30,000	15	8	6

Sample No. 4				Sample No. 5				Sample No. 6			
Cycles completed	No. of Visible Wires Broken			Cycles completed	No. of Visible Wires Broken			Cycles completed	No. of Visible Wires Broken		
	Pulley E	Pulley F	Pulley G		Pulley E	Pulley F	Pulley G		Pulley E	Pulley F	Pulley G
25,000	5	3	7	25,000	14	4	6	23,000	3	12	4
35,000	12	10	16	30,000	15	7	10	30,000	15	15	9

TABLE 27

TABLE 27

TABLE 28

TABLE 28

Progression of Visible Wire Failures

Test Type .....27.....

Cycling Speed ..50..... Cycles/Min. Rope Tension ..360.....lb. Stroke ± ..1.83....Inches Pulley Diameter ....2.75....Inches

Sample No. 1				Sample No. 2				Sample No. 3			
Cycles completed	No. of Visible Wires Broken			Cycles completed	No. of Visible Wires Broken			Cycles completed	No. of Visible Wires Broken		
	Pulley E	Pulley F	Pulley G		Pulley E	Pulley F	Pulley G		Pulley E	Pulley F	Pulley G
26,000	6	0	5	25,000	4	1	8	20,000	4	0	1
31,000	9	3	6	31,000	7	3	13	25,000	5	1	6
50,000	15	5	18	35,000	7	6	15	30,000	6	0	10
								35,000	9	2	13
								40,000	9	6	17

Sample No. 4				Sample No. 5				Sample No. 6			
Cycles completed	No. of Visible Wires Broken			Cycles completed	No. of Visible Wires Broken			Cycles completed	No. of Visible Wires Broken		
	Pulley E	Pulley F	Pulley G		Pulley E	Pulley F	Pulley G		Pulley E	Pulley F	Pulley G
26,000	2	4	3	26,000	5	1	6	20,000	0	2	3
31,000	2	7	4	31,000	6	4	11	25,000	1	6	7
50,000	6	12	5	35,000	8	7	15	30,000	2	7	8
								35,000	3	8	10
								40,000	7	13	11

PERCENTAGE REDUCTION IN STRENGTH DUE TO WORN AND BROKEN WIRES

Test Type No.	Sample No.	Pulley No.	No. of Visible Broken Wires	Breaking Load (Undamaged Section) lbf	Breaking Load (Worn Section) lbf	Percentage Reduction of Strength lbf
5	2	E	8	1859	1812	2.52
		F	16		1702	8.44
		G	1		1837	1.19
	4	E	11	1848	1781	3.62
		F	13		1747	5.46
		G	8		1740	5.84
	5	E	3	1857	1830	1.45
		F	14		1635	11.95
		G	14		1736	6.52
6	3	E	5	1830	1799	1.69
		F	12		1702	6.99
		G	1		1714	6.33
	5	E	13	1832	1774	3.16
		F	8		1698	7.31
		G	11		1841	0
8	1	E	14	1864	1514	18.77
		F	10		1676	10.08
		G	17		1561	16.25
	2	E	21	1864	1590	14.69
		F	10		1707	8.42
		G	14		1644	11.80
	3	E	10	1823	1658	9.05
		F	12		1624	10.91
		G	10		1723	5.48
	4	E	21	1850	1646	11.02
		F	8		1714	7.35
		G	20		1664	10.05
	5	E	11	1859	1707	8.17
		F	12		1534	17.48
		G	10		1707	8.17
	6	E	7	1859	1696	8.76
		F	17		1702	8.44
		G	6		1705	8.28

TABLE 29

PERCENTAGE REDUCTION IN STRENGTH DUE TO WORN AND BROKEN WIRES

Test Type No.	Sample No.	Pulley No.	No. of Visible Broken Wires	Breaking Load (Undamaged Section) lbf	Breaking Load (Worn Section) lbf	Percentage Reduction of Strength lbf
9	6	E	7	1855	1848	0.37
		F	16		1810	2.42
		G	2		1846	0.48
10	2	E	4	1873	1568	16.28
		F	12		1801	3.84
		G	4		1711	8.64
	3	E	8	1837	1814	1.26
		F	7		1734	5.60
		G	12		1792	2.44
	6	E	12	1875	1725	8.0
		F	7		1812	3.36
		G	9		1752	6.56
13	2	E	11	1864	1738	6.75
		F	12		1297	30.41
		G	5		1725	7.45
	3	E	3	1859	1774	4.57
		F	13		1785	3.98
		G	6		1810	2.63
	4	E	9	1866	1819	2.51
		F	12		1465	21.48
		G	11		1749	6.27
	5	E	6	1839	1781	3.20
		F	7		1684	8.42
		G	21		1664	9.51
14	2	E	6	1857	1823	1.83
		F	13		1835	1.18
		G	9		1850	0.37
	3	E	6	1846	1859*	0
		F	20		1758	4.76
		G	5		1850	0
	4	E	14	1857	1642	11.57
		F	14		1714	7.7
		G	10		1781	4.09
	5	E	6	1859	1823	1.93
		F	7		1826	1.77
		G	17		1756	5.54
	6	E	14	1864	1684	9.65
		F	12		1606	13.84
		G	16		1593	14.53

*Rope Broke in Grips

TABLE 29 Continued

PERCENTAGE REDUCTION IN STRENGTH DUE TO WORN AND BROKEN WIRES

Test Type No.	Sample No.	Pulley No.	No. of Visible Broken Wires	Breaking Load (Undamaged Section) lbf	Breaking Load (Worn Section) lbf	Percentage Reduction of Strength lbf
15	4	E	5	1846	1855	0
		F	6		1859	0
		G	14		1767	4.27
16	1	E	6	1864	1814	2.68
		F	15		1711	8.20
		G	16		1763	5.41
	2	E	5	1852	1796	3.02
		F	11		1644	11.23
		G	13		1779	3.94
	3	E	14	1864	1781*	4.45
		F	5		1781*	4.45
		G	15		1855	0.48
	4	E	18	1868	1781	4.65
		F	3		1866	0.10
		G	11		1879	0
	5	E	11	1861	1702	8.54
		F	21		1756	5.64
		G	12		1770	4.88
	6	E	8	1864	1781	4.45
		F	14		1747	6.27
		G	15		1788	4.07
19	1	E	11	1861	1420	23.69
		F	2		1689	9.24
		G	15		1313	29.44
	2	E	17	1841	1734	5.81
		F	1		1868*	0
		G	14		1749	4.99
	3	E	6	1852	1613	12.90
		F	2		1510	18.46
		G	13		1028	44.49
	4	E	16	1852	1590	14.14
		F	2		1702	8.09
		G	8		1615	12.79
	5	E	11	1852	1752	5.39
		F	6		1761	4.91
		G	12		1548	16.41

*Rope Broke in Grips

TABLE 29 Continued

PERCENTAGE REDUCTION IN STRENGTH DUE TO WORN AND BROKEN WIRES

Test Type No.	Sample No.	Pulley No.	No. of Visible Broken Wires	Breaking Load (Undamaged Section) lbf	Breaking Load (Worn Section) lbf	Percentage Reduction of Strength lbf
24	2	E	12	1859	1653	11.12
		F	5		1792	3.61
		G	6		1846*	0.69
	5	E	14	1868	1788	4.28
		F	2		1875	0
		G	5		1841	1.44
25	3	E	10	1857	1794	3.39
		F	16		1828	1.45
		G	14		1832	1.34
26	1	E	8	1850	1743	5.78
		F	8		1734	6.27
		G	15		1711	7.51
	2	E	3	1855	1720	[illegible]
		F	13		1790	3.50
		G	6		1767	4.74
	3	E	15	1859	1754	5.64
		F	8		1763	5.16
		G	6		1799	3.22
	4	E	12	1855	1785	3.77
		F	10		1745	5.92
		G	16		1662	10.40
	5	E	15	1855	1767	4.74
		F	7		1743	6.03
		G	10		1848	0.37
	6	E	15	1848	1870	0
		F	15		1779	3.73
		G	9		1859*	0
27	1	E	15	1868	1763	5.62
		F	5		1763	5.62
		G	18		1575	15.68
	2	E	7	1868	1832	1.92
		F	6		1817	2.73
		G	15		1714	8.24
	3	E	9	1841	1575	14.44
		F	6		1770	3.85
		G	17		1732	5.92

*Rope Broke in Grips

TABLE 29 Continued

TEST TYPE 1

ROPE TENSION 140 lb. PULLEY DIAMETER 2.25 INCHES. SPEED 100 CYCLES/MINUTE

Cycles Completed	Measured Extension, Inch							
	Sample Numbers							
	1	2	3	4	5	6	7	8
22,000	0.107			0.096				
25,000		0.102	0.102		0.122	0.100	0.136	0.095
30,000	0.115			0.105				
35,000	0.140	0.127	0.127	0.115	0.151	0.120	0.149	0.115
45,000	0.149	0.141	0.139	0.131	0.166	0.120	0.150	0.136
55,000	0.167	0.150	0.143	0.137		0.142	0.173	0.137
60,000				0.139				
65,000		0.154	0.166		0.184	0.150	0.180	0.157
70,000	0.181			0.176				
75,000		0.158	0.173		0.186		0.191	0.169
85,000		0.178	0.185		0.203	0.170	0.193	0.180
95,000		0.182	0.193		0.207	0.175	0.195	0.182
105,000		0.191				0.179	0.210	
107,000								0.191
115,000							0.230	
117,000			0.213					0.212
126,000			0.221					
138,000			0.223					0.223
146,000						0.190	0.242	
148,000			0.242					

Numbers of Cycles completed, rounded off to nearest 1000.

TABLE 30

TEST TYPE 10

ROPE TENSION 140 lb. PULLEY DIAMETER 2.50 INCH. SPEED 100 CYCLES/MINUTE

Cycles Completed	Extension, Inch					
	Measured Sample Numbers					
	1	2	3	4	5	6
30,000	0.100			0.095		
40,000		0.105	0.123		0.214	0.129
45,000	0.132			0.129		
58,000	0.148			0.144		
65,000		0.135	0.144		0.252	0.169
80,000	0.174	0.142		0.160	0.262	0.176
84,000			0.166			
90,000		0.162			0.266	
95,000						0.179
100,000	0.177	0.167		0.176	0.274	
105,000			0.177			
113,000	0.185			0.181		
115,000						0.203
125,000	0.207		0.182	0.188		
135,000						0.207
145,000			0.202			
148,000		0.203				
150,000						0.218
160,000			0.207			
170,000		0.214				0.225

Numbers of cycles completed rounded off to nearest 1000.

TABLE 31

TEST TYPE 19

ROPE TENSION 140 lb. PULLEY DIAMETER 2.75 INCHES. SPEED 100 CYCLES/MINUTE

Cycles Completed	Measured Extension, Inch					
	Sample Numbers					
	1	2	3	4	5	6
100,000	0.177			0.173		
150,000		0.185	0.172		0.200	0.165
160,000	0.201			0.217		
250,000	0.250					
251,000				0.248		
260,000		0.210	0.204		0.223	0.181
320,000	0.265			0.265		
400,000		0.250	0.230		0.259	0.222
401,000	0.281			0.283		
427,000		0.257			0.269	
438,000						0.232
500,000	0.295			0.298		
550,000			0.256			
601,000			0.271			

TABLE 32

TEST TYPE 4

ROPE TENSION 240 lb. PULLEY DIAMETER 2.25 INCHES. SPEED 100 CYCLES/MINUTE

Cycles Completed	Measured Extension, Inches					
	Sample Numbers					
	1	2	3	4	5	6
11,000				0.160		
15,000	0.137	0.123		0.187	0.130	0.154
20,000	0.143	0.125	0.151			0.159
25,000				0.203	0.147	
30,000		0.169	0.173		0.167	
31,000	0.179					0.198
34,000				0.232		
37,000			0.174			
40,000		0.187				
41,000				0.233		
43,000	0.190					0.202
50,000		0.200				

Numbers of cycles completed rounded off to nearest 1000

TABLE 33

TEST TYPE 13

ROPE TENSION 240 lb. PULLEY DIAMETER 2.50 INCHES. SPEED 100 CYCLES/MINUTE

Cycles Completed	Measured Extension, Inch					
	Sample Numbers					
	1	2	3	4	5	6
15,000	0.132			0.107		
20,000	0.150			0.126		
30,000	0.177		0.188	0.142		0.250
40,000		0.194			0.193	
45,000	0.218			0.174		
46,000			0.225			0.280
60,000		0.230			0.225	
61,000	0.231		0.259	0.196		0.307
76,000	0.243			0.215		
81,000	0.258	0.283		0.220	0.284	

TABLE 34

TEST TYPE 22

ROPE TENSION 240 lb. PULLEY DIAMETER 2.75 INCHES. SPEED 100 CYCLES/MINUTE

Cycles Completed	Measured Extension, Inch					
	Sample Numbers					
	1	2	3	4	5	6
30,000				0.177		
40,000	0.253		0.184	0.193		
45,000		0.168			0.178	0.198
52,000				0.215		
60,000		0.182	0.215		0.210	0.225
65,000	0.287			0.235		
75,000		0.208		0.250	0.229	
80,000	0.311					0.239
82,000				0.258		
90,000			0.257			
95,000	0.339					
100,000						0.258
110,000	0.351					
120,000			0.287			
125,000	0.374					
130,000			0.305			
148,000			0.321			

Numbers of cycles completed rounded off to nearest 1000

TABLE 35

TEST TYPE 7

ROPE TENSION 360 lb. PULLEY DIAMETER 2.25 INCHES. SPEED 100 CYCLES/MINUTE

Cycles Completed	Extension, Inch					
	Measured Sample Numbers					
	1	2	3	4	5	6
8,000			0.173			0.158
9,000		0.155			0.176	
10,000	0.149			0.172		
12,000						0.193
13,000	0.162	0.172		0.175	0.178	
17,000	0.185	0.213			0.232	
18,000			0.245	0.210		0.221
26,000			0.256			0.233
31,000			0.295			0.268

TABLE 36

TEST TYPE 16

ROPE TENSION 360 lb. PULLEY DIAMETER 2.50 INCHES. SPEED 100 CYCLES/MINUTE

Cycles Completed	Measured Extension, Inch					
	Sample Numbers					
	1	2	3	4	5	6
10,000	0.172	0.188	0.191	0.166	0.189	0.194
15,000	0.180	0.221	0.226	0.196	0.222	0.220
20,000	0.207		0.237	0.217		0.234
21,000		0.260			0.266	
25,000	0.249		0.276			0.273
26,000		0.265			0.267	
30,000	0.256					0.288
31,000		0.305			0.306	
35,000	0.270					0.300
37,000		0.314				

TABLE 37

TEST TYPE 25

ROPE TENSION 360 lb. PULLEY DIAMETER 2.75 INCHES. SPEED 100 CYCLES/MINUTE

Cycles Completed	Measured Extension, Inch					
	Sample Numbers					
	1	2	3	4	5	6
18,000		0.216			0.253	
20,000	0.240		0.269	0.226		0.225
24,000		0.240			0.284	
26,000	0.276		0.272	0.284		0.232
31,000		0.301			0.336	
32,000	0.310			0.308		0.267
33,000			0.313			
37,000		0.314			0.353	
40,000			0.332			
43,000			0.339			
44,000		0.323			0.369	
49,000		0.331	0.368		0.380	

Number of cycles completed rounded off to nearest 1000

TABLE 38

ROPE TENSION 140 lb. SPEED 100 CYCLES/MINUTE

Number of Cycles Completed	Frequency of Measured Extension Values	Extension Values Recorded Inch		
		Minimum	Maximum	Average
0 to 22,500	2	0.096	0.107	0.101
22,500 to 27,500	5	0.095	0.136	0.107
27,500 to 32,500	4	0.095	0.115	0.104
32,500 to 37,500	8	0.115	0.149	0.131
37,500 to 42,500	4	0.105	0.214	0.143
42,500 to 47,500	9	0.120	0.166	0.138
47,500 to 52,500	0			
52,500 to 57,500	7	0.137	0.173	0.150
57,500 to 62,500	4	0.139	0.167	0.148
62,500 to 67,500	10	0.135	0.252	0.169
67,500 to 72,500	2	0.176	0.181	0.178
72,500 to 77,500	5	0.158	0.186	0.175
77,500 to 85,000	5	0.142	0.262	0.183
85,000 to 95,000	9	0.162	0.266	0.190
95,000 to 105,000	19	0.173	0.274	0.190
105,000 to 137,500	13	0.181	0.230	0.199
137,500 to 162,500	15	0.165	0.242	0.205
162,500 to 187,500	2	0.214	0.225	0.219
187,500 to 225,000	0			
225,000 to 275,000	5	0.222	0.283	0.254
275,000 to 325,000	2	0.265	0.265	0.265
325,000 to 375,000	0			
375,000 to 425,000	6	0.222	0.283	0.254
425,000 to 475,000	3	0.232	0.269	0.253
475,000 to 525,000	3	0.256	0.298	0.283
525,000 to 675,000	1			0.271

TABLE 39

TEST TYPES 4, 13 AND 22

ROPE TENSION 240 lb. SPEED 100 CYCLES/MINUTE

NUMBER OF CYCLES COMPLETED	FREQUENCY OF MEASURED EXTENSION VALUES	EXTENSION VALUES RECORDED INCH		
		MINIMUM	MAXIMUM	AVERAGE
0 to 12,500	1			0.160
12,500 to 17,500	7	0.107	0.187	0.139
17,500 to 22,500	6	0.125	0.159	0.142
22,500 to 27,500	2	0.147	0.203	0.175
27,500 to 32,500	10	0.142	0.250	0.182
32,500 to 37,500	2	0.174	0.232	0.203
37,500 to 42,500	7	0.184	0.253	0.205
42,500 to 47,500	9	0.168	0.280	0.204
47,500 to 52,500	2	0.200	0.215	0.208
52,500 to 57,500	0			
57,500 to 62,500	10	0.182	0.307	0.228
62,500 to 67,500	2	0.235	0.287	0.261
67,500 to 72,500	0			
72,500 to 77,500	5	0.208	0.250	0.229
77,500 to 82,500	7	0.239	0.311	0.265
82,500 to 87,500	0			
87,500 to 92,500	1			0.257
92,500 to 97,500	1			0.339
97,500 to 112,500	2	0.258	0.351	0.304
112,500 to 137,500	3	0.287	0.374	0.322
137,500 to 162,500	1			0.321

TABLE 40

TEST TYPES 7, 16 AND 25

ROPE TENSION 360 lb. SPEED 100 CYCLES/MINUTE

NUMBER OF CYCLES COMPLETED	FREQUENCY OF MEASURED EXTENSION VALUES	EXTENSION VALUES RECORDED INCH		
		MINIMUM	MAXIMUM	AVERAGE
0 to 12,500	13	0.149	0.194	0.175
12,500 to 17,500	12	0.162	0.226	0.200
17,500 to 22,500	16	0.185	0.269	0.232
22,500 to 27,500	12	0.232	0.284	0.266
27,500 to 32,500	9	0.256	0.310	0.293
32,500 to 37,500	7	0.267	0.353	0.304
37,500 to 42,500	1			0.332
42,500 to 47,500	3	0.323	0.369	0.344
47,500 to 52,500	3	0.331	0.380	0.360

TABLE 41

GENERAL PHOTOGRAPH OF MACHINE

PHOTOGRAPH A

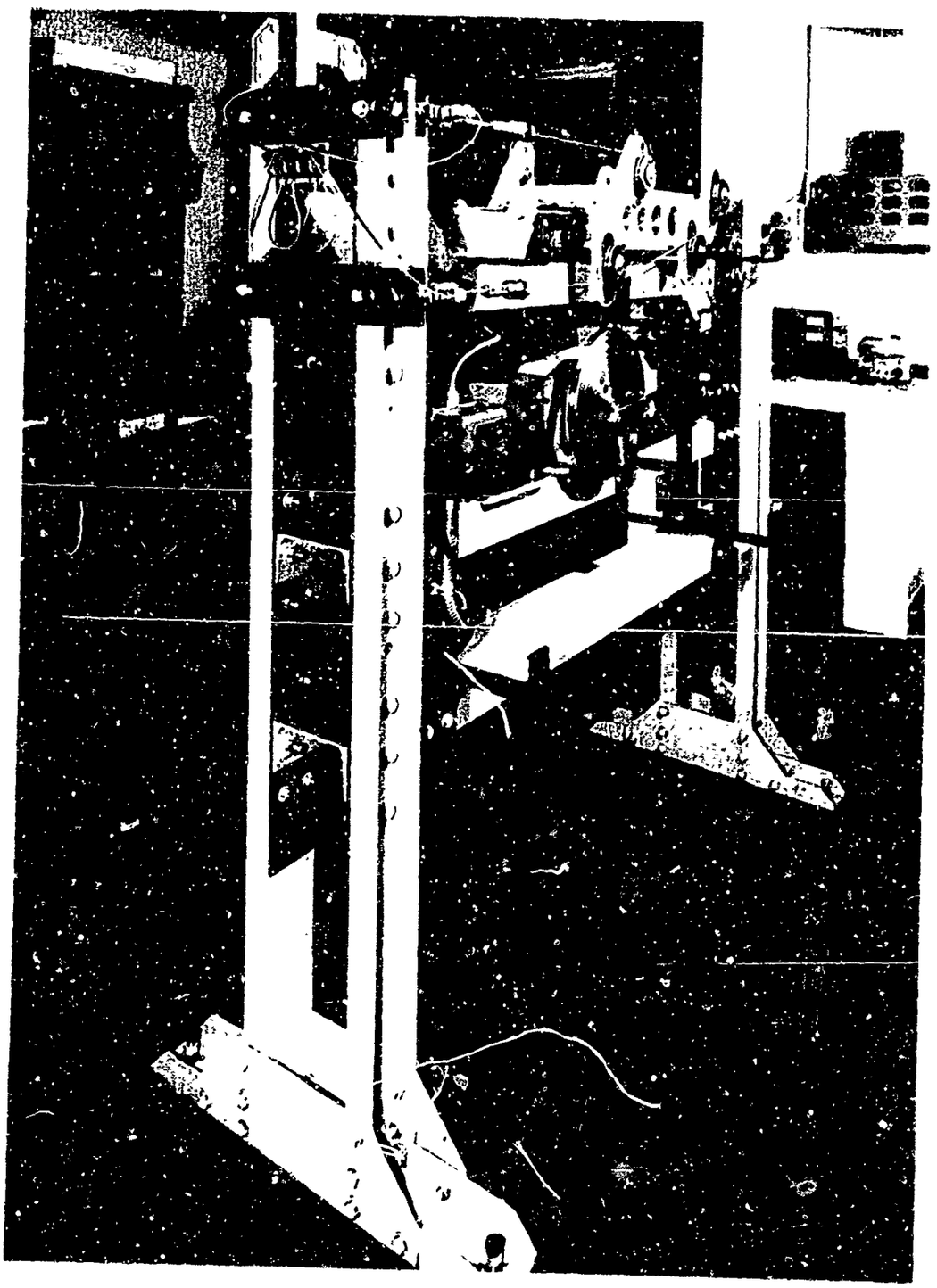

PHOTOGRAPH B

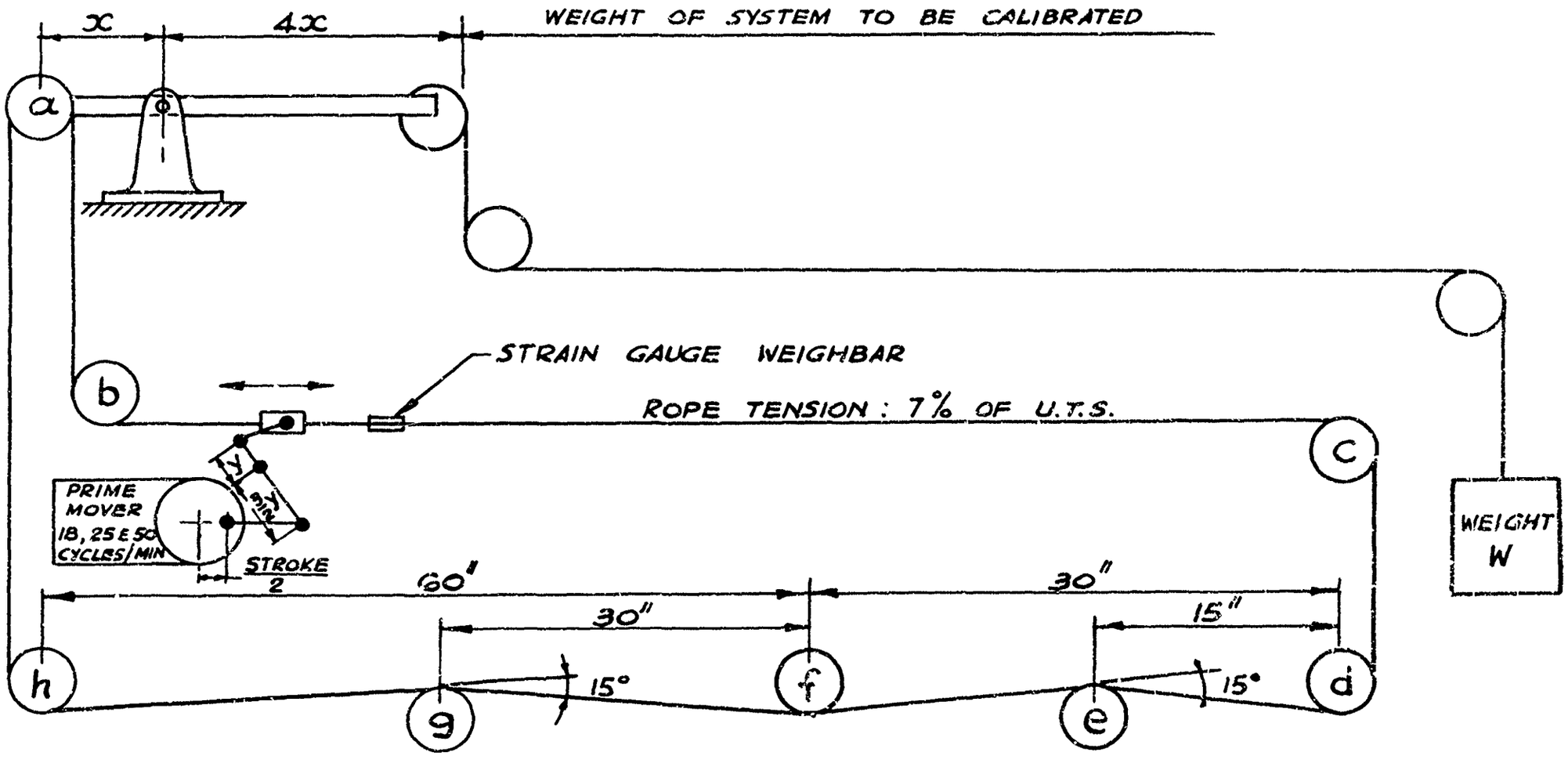

NOTE :- WEIGHT W = TOTAL WEIGHT i.e. WEIGHT OF SYSTEM + WEIGHTS ADDED

RIG DIAGRAM

FIG. 1.

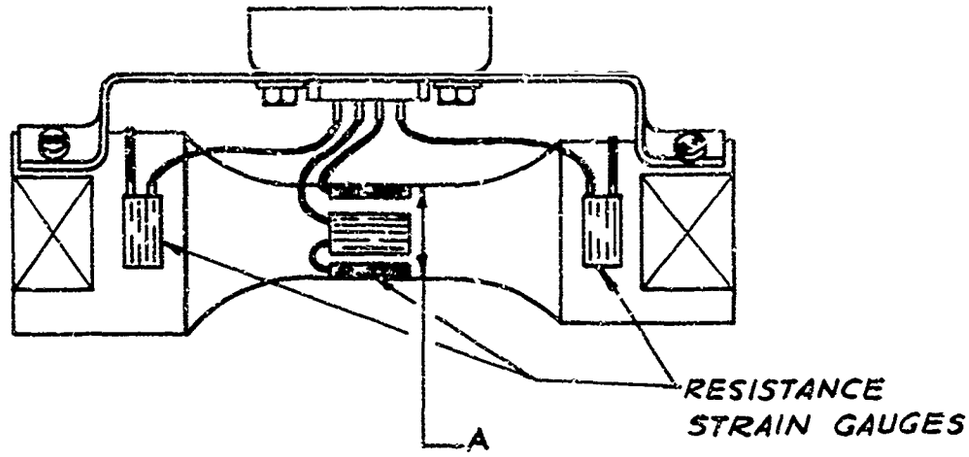

STRAIN GAUGE WEIGHBAR

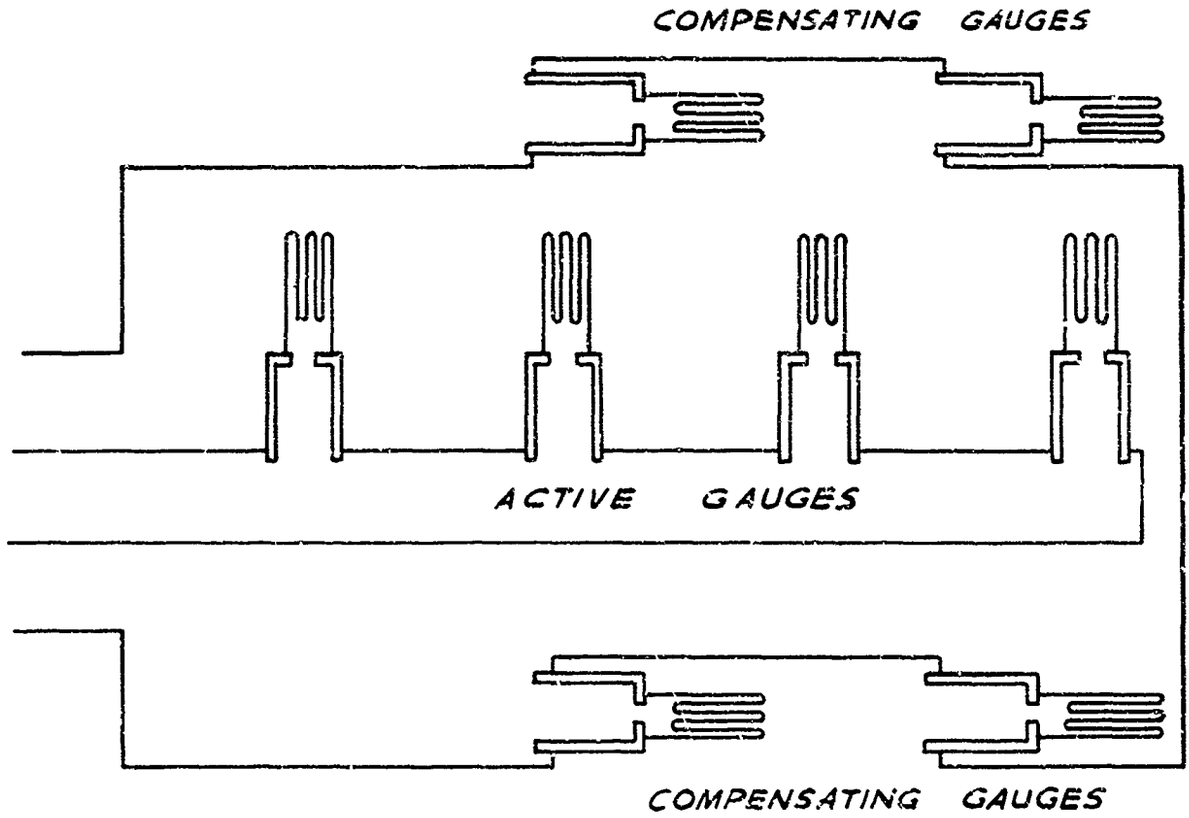

WIRING DIAGRAM

CROSS SECTION AREA AT 'A' VARIES TO GIVE MAX. LOAD RANGES OF 200, 500 & 1,000 lbf
GAUGES SECURED WITH EPOXY RESIN ADHESIVE AND WATERPROOFED WITH AN EPOXY RESIN COATING.

EACH GAUGE HAS 110 Ohms NOMINAL RESISTANCE.

FIG. 2.

PERCENTAGE REDUCTION IN STRENGTH AFTER ENDURANCE TESTING

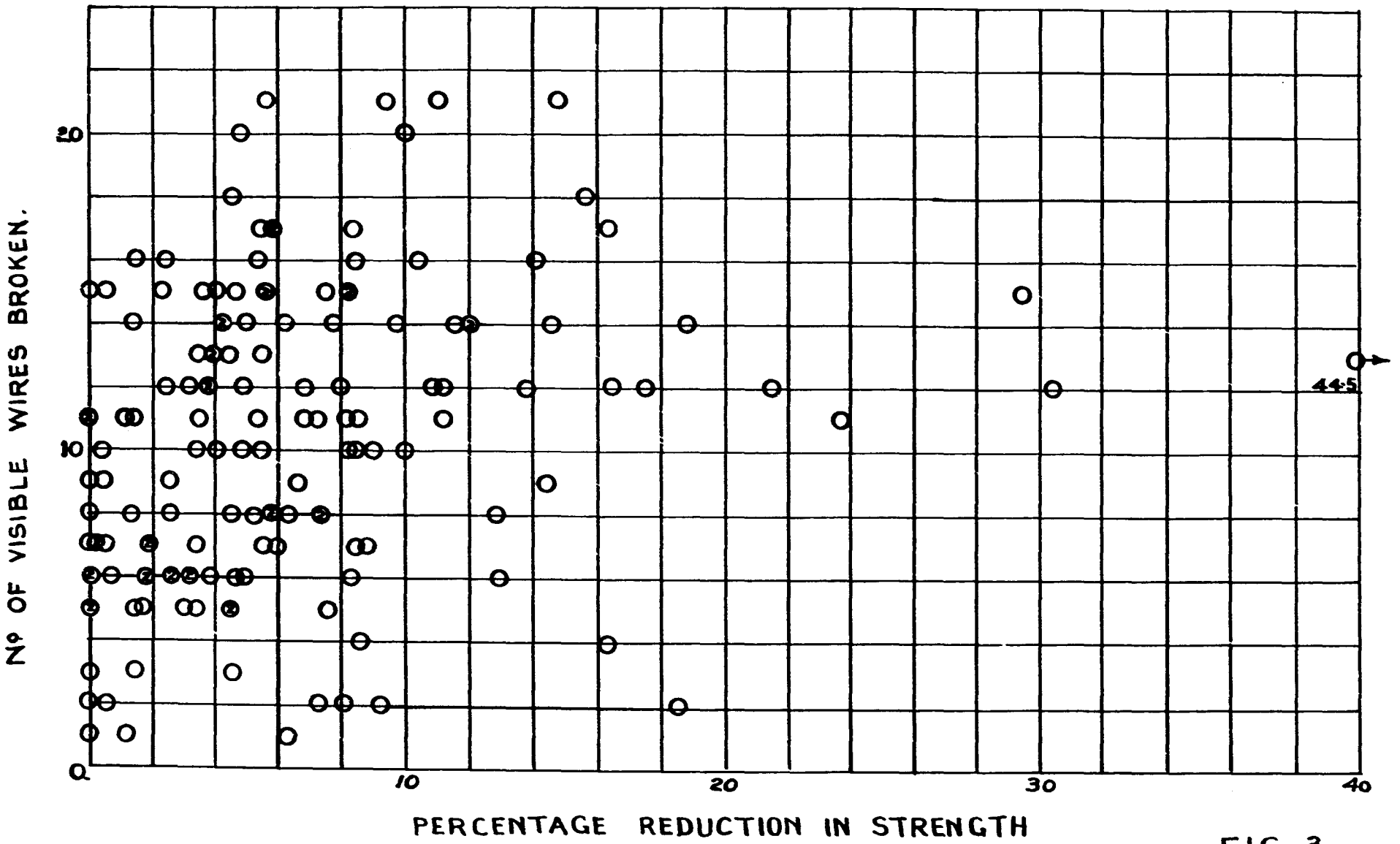

FIG 3.

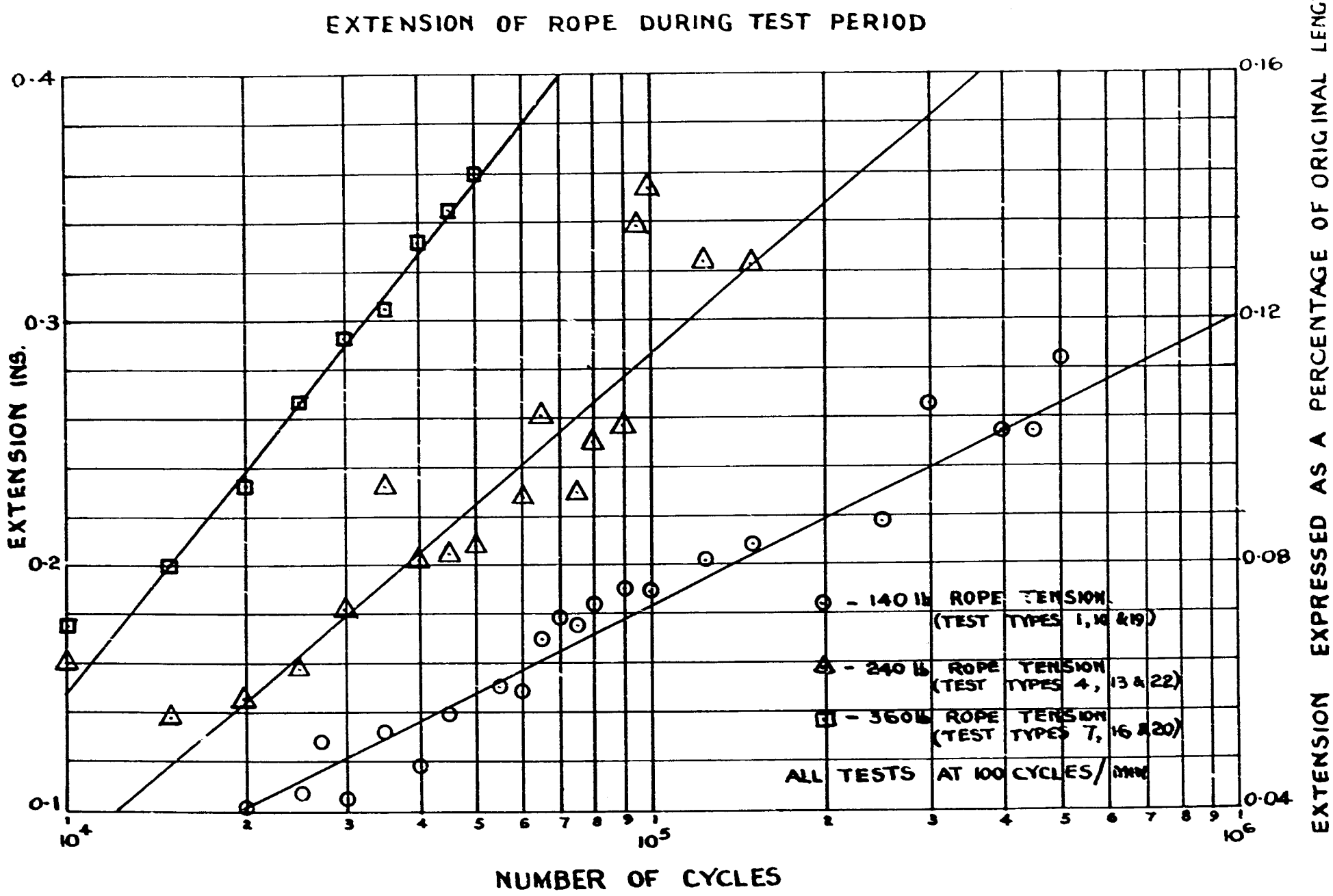
EXTENSION OF ROPE DURING TEST PERIOD
EXTENSION INS.
0·4
0·3
0·2
0·1
EXTENSION EXPRESSED AS A PERCENTAGE OF ORIGINAL LENGTH
0·16
0·12
0·08
0·04
NUMBER OF CYCLES
10^4
10^5
10^6
- 140 lb ROPE TENSION (TEST TYPES 1, 10 & 19)
- 240 lb ROPE TENSION (TEST TYPES 4, 13 & 22)
- 360 lb ROPE TENSION (TEST TYPES 7, 16 & 20)
ALL TESTS AT 100 CYCLES/MIN

FIG. 4

DEV/00/D/53

THIRD ANGLE PROJE

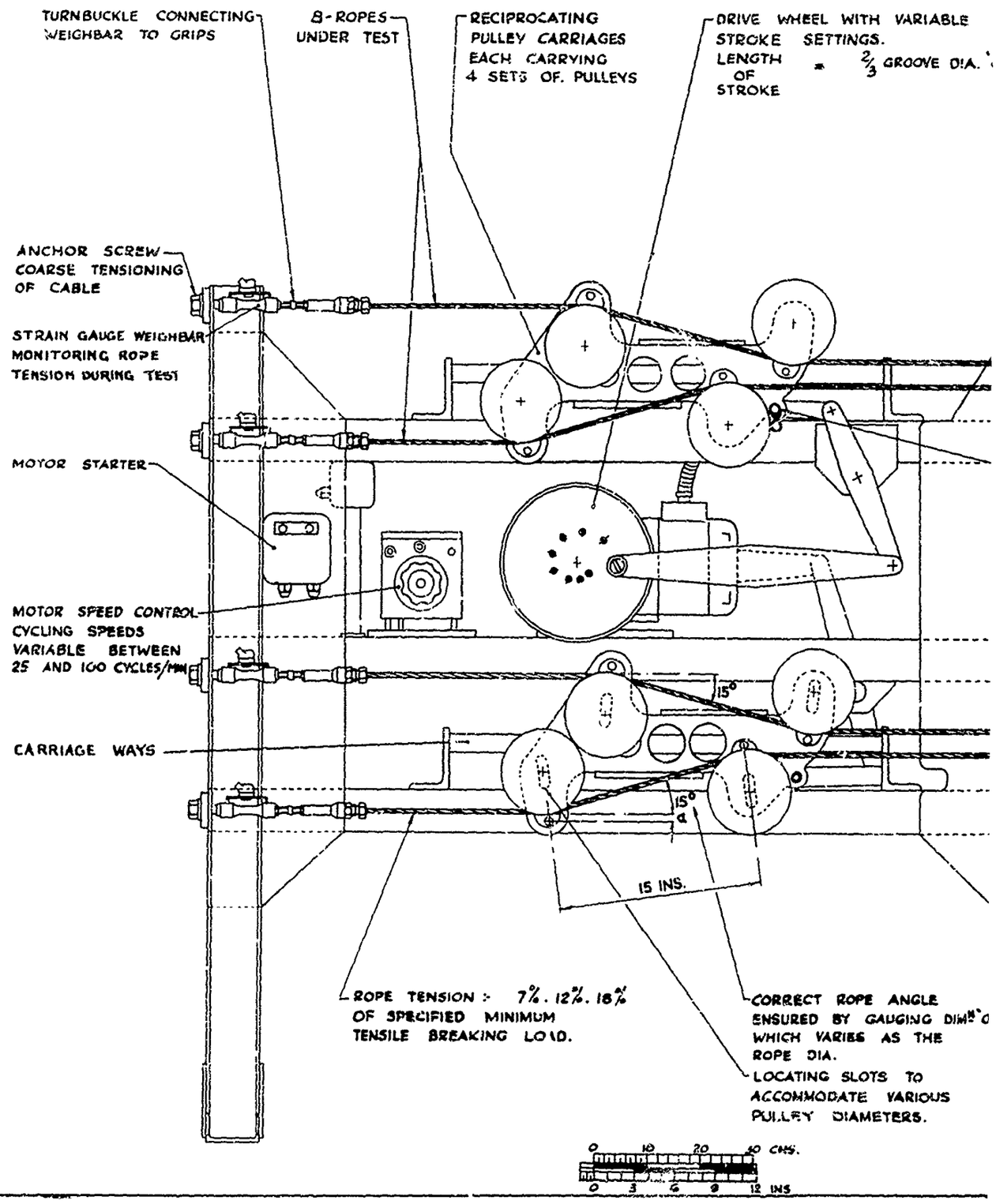

A

ANGLE PROJECTION.

WITH VARIABLE
TINGS.
$\frac{2}{3}$ GROOVE DIA. 'G'.

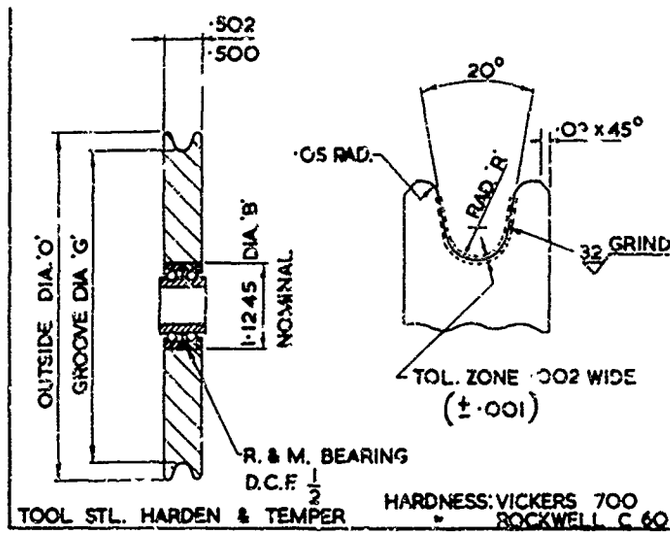

ITEM No	RAD. 'R'	GROOVE DIA. 'G'	OUTSIDE DIA. 'O'	ROPE DIA.	PULLEY/ROPE RATIO
1	·0672	2·25	2·58	1/8	18
2	·0672	2·5	2·83	1/8	20
3	·0672	2·75	3·08	1/8	22
4	·1007	3·375	3·875	3/16	18
5	·1007	3·75	4·25	3/16	20
6	·1007	4·125	4·625	3/16	22
7	·1344	4·5	5·15	1/4	18
8	·1344	5·0	5·65	1/4	20
9	·1344	5·5	6·15	1/4	22

32 ALL OVER. ·002 DIA.
DIA. 'G' & DIA. 'B' DATUM. CONC. TOL.
DIA. 'B' ·0004 / ·0009 INTERFERENCE FIT WITH BEARING.
PULLEY/ROPE RATIO = $\frac{\text{DIA. 'G'}}{\text{ROPE DIA.}}$
R = $\frac{\text{ROPE DIA.}}{2}$ x 1·075

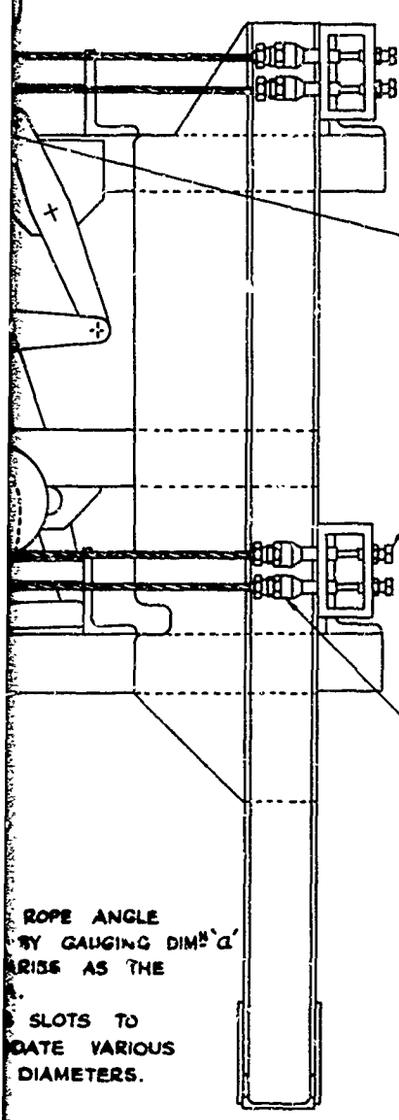

CARRIAGE MAY BE DISENGAGED FOR ROPE INSPECTION

DIFFERENTIAL SCREW TO GIVE FINE TENSIONING
1 TURN = 0·008in. TRAVEL

ROPE HELD BY SPLIT-COLLET GRIPS.
ADJUSTABLE FOR DIFFERENT ROPE SIZES

ROPE ANGLE
BY GAUGING DIMN 'a'
ARISE AS THE
.
SLOTS TO
DATE VARIOUS
DIAMETERS.

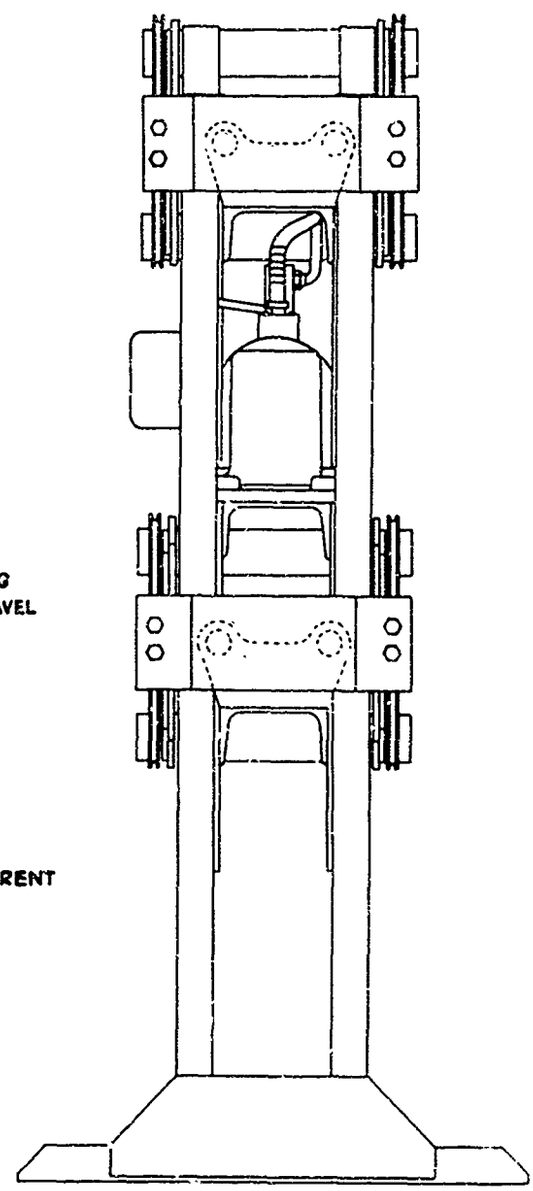

M/C GUARDS FOR RECIPROCATING PARTS (NOT SHOWN)

FIG. 5.

B