ESD-TR 70-92

Unclassified

ESD ACCESSION LIST
ESTI Call No. 69608
Copy No. 1 of 1 cys.

MASSACHUSETTS INSTITUTE OF TECHNOLOGY

LINCOLN LABORATORY

ESD RECORD COPY
RETURN TO
SCIENTIFIC & TECHNICAL INFORMATION DIVISION
(ESTI), BUILDING 1211

21G - 0004

OSCILLOSCOPE CAMERAS FOR VIDEO RECORDING - REENTRY PHYSICS PROGRAM

E. E. Schowengerdt, Jr.

This document has been approved for public release and sale; its distribution is unlimited. Reproduction in whole or in part is permitted for any purpose of the United States Government. Copies of this document shall not be made without the express written approval of Lincoln Laboratory (Publications Office).

13 March 1961

The work reported in this document was performed at Lincoln Laboratory, a center for research operated by Massachusetts Institute of Technology; this work was supported by the U.S. Advanced Research Projects Agency under Air Force Contract AF19(604)-7400.

LEXINGTON MASSACHUSETTS

Unclassified

AD706928

pif-1350a

This document has been approved for public release and sale;
its distribution is unlimited.

ABSTRACT

This report describes the video recording camer-
as being used at the MIT Arbuckle Neck site in
connection with the Reentry Physics Experiment.

Accepted for the Air Force
Franklin C. Hudson
Chief, Lincoln Laboratory Office

This document has been approved for public release and sale;
its distribution is unlimited.

I. INTRODUCTION

The Reentry Physics project being conducted at Wallops Island consists of tracking the final stage of a six-stage rocket as it re-enters the earth's atmosphere, and to record signal amplitude, azimuth, elevation, time and range at three different radar frequencies. As a part of this data recording complex, 35 mm video recording strip-film cameras have been provided to obtain a record of pulse shape and to serve as a back up amplitude record to the primary system.

Initially, two cameras were set up: the first, referred to as the slow-speed Fairchild camera, is being used at film speeds of 3 to 5 feet/second; the other, a General Radio high-speed camera, was re-built to run at approximately 16 feet/second and later modified to also run at 4 feet/second. A third camera (16 mm) was set up after experience proved the value of recording the video which appeared on the tracking operator's scope during the shoot.

The General Radio camera was designed to photograph data at the 16 feet/second rate for approximately one minute covering the re-entry time of the sixth stage velocity package. It provides a record of each video return from the three radars along with a digital timing trace for correlation.

The Fairchild camera was initially set up to record S-band video with timing over a time period greater than that photographed by the GR camera but at a lower data rate. However, different video inputs using faster or slower data rates and camera speeds can be used to provide flexibility in meeting test requirements.

II. HIGH-SPEED CAMERA

A. General

A relatively high-speed 35 mm strip camera was required with a 1000 ft. capacity which could maintain a constant film speed past the lense. As commercial cameras were not available, a General Radio type 651-AE oscillograph recorder was obtained and modified to accept 1000-foot rolls of film. Camera speed was controlled through a General Radio type 1570-AS15 automatic line voltage regulator which was modified to work with the camera. Data was presented on two dual-gun oscilloscopes and photographed directly by the camera.

B. Description

1. Camera

The 651AE General Radio camera was modified by: (1) Repackaging in a larger case to provide room for the 1000-foot supply and take-up reels (See Figure 1): (2) Adding a microswitch near the take-up reel to turn off the camera after a run: (3) Adding shims to maximize the drag on the supply reel shaft (See Figure 3). The drag prevents over-running of the supply reel: (4) Adding a gear box to the camera drive to provide a film speed past the lense of approximately 4 feet/second. Although the camera presently is being operated at this reduced speed, it was originally built to run at approximately 16 feet/second. The slower camera speed was used after "live" test data showed that more meaningful pulse shape data could be obtained if a lower sweep rate were used on the two oscilloscopes. This permitted the camera to be run more slowly. However, if the faster speed of 16 feet/second is required, the gear train may be removed and no changes are required in the control circuitry other than changing the voltage applied to the take-up motor. (See below. Figure 3 and 4 show the camera set up for 16 and 4 feet/second speeds respectively). During early tests, with the camera speed at 16 feet/second, data was photographed using a 2 microsecond/cm sweep; for the lower camera speed, a 10 microsecond/cm sweep is used.

When the camera is run at 16 feet/second, the take-up motor is connected to the 95-volt tap of the motor driven variac. A higher voltage was not used because the take-up motor during the early stages of a run over-ran the regulation of the primary drive motor. When run at 4 feet/second, an auxiliary variac (pictured in Figure 8) supplies 75 volts to the take-up motor. The input to this auxiliary variac is connected in parallel with the input to the other variac and is controlled by the same camera on/off switches. At the 4-feet/second speed, the take-up motor has no effect on the film speed; seventy-five volts provide sufficient torque.

The main film drive is through the large sprocket wheel driven by a 4600 rpm universal motor through a gear reduction system. A flywheel is required on the drive motor shaft to lengthen the acceleration

time of the motor. The speed control servo system also lengthens the acceleration time by applying a gradually increasing voltage to the motor. This gradual increase of motor speed is necessary to let the take-up motor acquire sufficient speed and torque to take up the exposed film before it tangles.

2. Speed Control

A General Radio type 1570 AS15 control unit and motor driven variac controls the voltage to the camera drive motor. An elementary schematic diagram of the control unit is shown in Figure 5.

The speed of the camera drive sprocket is measured by a DC tachometer and the output voltage compared with a standard voltage from a type 5651 voltage-reference tube to obtain an error voltage. The error voltage then is applied through a two-stage balanced amplifier in push-pull to a thyratron motor control circuit.

The 60-cycle thyratron bias voltage is at a 90-degree phase angle with respect to the AC plate voltage. The amplified DC error voltage is superimposed on this AC bias voltage to vary the thyratron firing angle from 0 to almost 180 degrees.

The two-phase motor receives power from the 60-cycle line through the thyratron control circuit. By a push-pull variation in firing angle, the thyratrons control the relative phase between the motor winding voltages. The thyratron transformers provide filtering as well as impedance matching. As the thyratron firing angle changes from 0 to almost 180 degrees, the angle between the motor voltages changes continuously from approximately +90 degrees to -90 degrees. At balance, full voltage is applied to both motor windings at a zero-degree phase angle. The resultant dynamic braking improves the transient response.

The gain control is located on the control unit chassis. As this control is turned clockwise, the regulator sensitivity is improved but the regulator becomes less stable. If the gain control is set too high, the motor will overshoot several times after each correction. At full gain the motor may oscillate continuously.

A minor change was made in the control unit which substituted a tachometer voltage for the input instead of using rectified line voltage which the unit had been designed to regulate. The change is indicated on the schematic of the control unit (See Figure 6). Figure 7 shows camera cabling.

A limit stop (Figure 8) is mounted on the motor driven variac to prevent its full output going to the drive motor. The stop limits the variac only during initial camera acceleration. The drive motor does not require full voltage to maintain film speed after the camera is running; when the camera starts, the control circuit tries to get the motor up to

speed as quickly as possible and in so doing applies more voltage than necessary to the drive motor which causes the speed to overshoot and oscilate more than necessary. The stop, by limiting the maximum voltage applied to the motor, also helps to provide a longer acceleration time. This is desirable since it gives the take-up motor "a head start".

C. Scopes

Two dual gun scopes (Tektronix type 551) are used to permit simultaneous display of three radar returns and a timing trace. The scopes are positioned to permit the images on the CRTs to be photographed side by side, one scope is photographed directly and the other is reflected from a front-surfaced mirror before being photographed. The mirror is mounted in an adjustable holder which also is pivoted on the horizontal axis, adjusted by a knob. The mirror should be set to bisect the picture area as shown in Figure 9. The scope traces should be positioned to provide the maximum space for amplitude deflections.

Both scopes have CRTs which use a P-5 phospher. The phospher was chosen for its low persistance to avoid image blurring at the 16 foot/second camera speed; however, because of its low light output, maximum scope intensity and a lense stop of f 1.5 should be used (for both camera speeds).

When the camera is run at 4 feet/second, it is necessary to mask out portions of both CRTs so that only the information during the 12 μs narrow tracking gate is displayed. This is necessary to avoid confusion when reading the binary timing trace.

The direction of sweep on the front scope has been reversed so that both scopes present their traces on the film left to right. The direction of sweep is reversed by reversing two wires on the CRT (See scope manual).

D. Camera Operation and Adjustments

1. Focusing (Both Scopes and Camera)

The f 1.5 lense is mounted in a sleeve which permits focusing over a wide range of distances. The sleeve, held in the lense mount by a knurled screw, is set to approximately the correct focus and need not be changed. The lense also has the standard fine focus adjustment which is used for focusing; however, the distance marking on the lense is not calibrated for this application.

The traces on the scopes should be focused and the intensity turned up to maximum. Next, the camera lense is adjusted to focus these images on a piece of frosted film*. The film is placed over one of the openings in the sprocket wheel and fed into place behind the lense

* A piece of film can be frosted by sanding off the emulsion using a fine grit emerey (240) until an even frosted finish is obtained.

by turning the flywheel on the drive motor and not the sprocket wheel. This is necessary to avoid stripping a small fiber gear in the motor gear box. (The reduction is 24 to 1 when the film runs at 4 feet/second.) The image on the frosted film may be observed directly or the camera cover can be lowered and the image on the film viewed through the eye piece. The eye piece must be covered with a light tight cap after use. The camera lense should not be focused while looking through the eye piece with no frosted film.

2. Aperture Setting: Wide Open - f 1.5

3. Film

The combination of camera speed and the low light output of the P-5 phospher makes it difficult to obtain dark traces at the 16 feet/second speed. Eastman Kodak Linograph Ortho film and Plus X pan give best results; however, Plus X is being used because of availability. It provides good traces at the 4 foot/second speed and also works well in the Fairchild camera. When film is exposed at the 16 foot/second speed, traces are lighter but usable. Presensitizing* sometimes helps to obtain darker traces at this speed.

4. Loading

Before the camera can be loaded, the unexposed film must be taken off its supply core and tightly rewound on one of the daylight loading reels with the emulsion side in. The reel is placed in the camera and fed through behind the lense with the emulsion side facing the lense (See Figure 9). Turn the sprocket wheel only by the flywheel on the drive motor. The film is attached to the take-up reel with tape and wound in a clockwise direction; several turns should be wound on the reel.

5. Starting

Both toggle switches on the control panel must be on. The master power switch on the left turns on power to the scopes and camera. The other toggle switch turns on the camera control unit. The variac must be turned to zero - this has to be done after every run. After the equipment has been warmed up and the correct data displayed for photographing, the camera can be started by pushing the start button on the control panel. An additional start button is also provided for remote starting. After a run, power to the motors is shut off by the microswitch near the take-up reel which is tripped by the tail of the film as it flaps around. A stop button is also located on the control panel.

The camera may be started and stopped when run at the 4 feet/second speed. However, when set up to run at 16 feet/second, it should not be stopped once it has been started.

* Pre-sensitization was tried using a 6-volt instrument panel light bulb in series with a variable resistor. The light was placed approximately 1 inch from the film a few inches "up stream" from the lense. An improved trace was obtained with Eastman Linograph ortho film with 3-volts on the light. The setting was determined experimentally. Tests were not made with other films.

6. Test Runs

Before an important test, a short piece of test footage should be run through the camera and developed to determine if settings are correct.

7. Maintenance

After a run, there may be small pieces of broken film in the camera caused by the tail end of the film whipping around; these should be cleaned out after every run. All of the bearings used in the camera are sealed and self-lubricating and need no attention. The spring hold-down rolls on both sides of the sprocket wheel are set to clear the film by 2 or 3 thousandths of an inch. It is not desirable to have these rolls bear on the film.

III. SLOW SPEED CAMERA (FAIRCHILD)

The other oscillograph recording camera is a Fairchild Model No. F246A equipped with a 1000-foot magazine. Maintenance and operating information is covered in the handbook for the camera and will not be repeated here. Briefly, its characteristics are:

1.	Capacity:	1000-foot, 35 mm film, with magazine: without the magazine, 100 feet.
2.	Speed:	Variable from 1 inch/minute to 60 inches/second.
3.	Shutter:	Normally used as strip camera; however, does have shutter with speeds from 1 second to 1/200 second.
4.	Lense:	50 mm, f 1.5 - usually used wide open.
5.	Records:	Presentation of dual gun Tektronix type 551 scope with P 11 phospher. Records each linear S-band return with tracking gate superimposed, and log UHF and digital timing on alternate triggers.
6.	Film:	Plus X - same as for the General Radio camera.

Only one modification was made to the camera to improve the performance at high speeds. The pulley on the drive motor for the magazine was replaced with one of a larger diameter: Dia of motor pulley - 1-3/4"; Dia of driven pulley - 3-5/8". The original motor pulley was smaller which allowed the belt to slip.

The persistance of the P11 phospher does not cause bluring at the camera speeds used. The scope intensity should be set at a point below the maximum (around 3/4 maximum) using Plus X film. The light output of

the phospher is greater than that obtained in the scopes used with the GR camera.

Before an important test, a short test footage should be run through the camera and developed to determine if all settings are correct.

IV. 16 MM CAMERA

A third camera is used which normally photographs the same video as seen by the tracking operator. In addition, a clock and a display indicating modes of radar operation is photographed on the same film to assist in data evaluation.

V. TIMING

The same timing from the primary recording system* is supplied to both 35 mm cameras and consists of ten bits from the 19-bit system timer. The five most significant and the four least significant bits are not displayed. Time is presented during the 12μs narrow gate. The 10 bits have the following values in seconds:

	MSB																		LSB
Bit #	1	2	3	4	5	6	7	8	9	10	11	12	13	14	15	16	17	18	19
						25.6	12.8	6.4	3.2	1.6	.80	.40	.20	.10	.05				
	Not Presented																		Not Presented

Bit #15, the least significant bit presented, changes once every 16 radar triggers. Time, therefore, becomes ambiguous every 51.15 seconds.

To Read Time

First: At T_o, the primary timer is reset to zero. Therefore, determine at what time the camera was started after T_o. For example, if the camera started at +250 seconds, this is the end of the fourth cycle $\frac{250}{51.15}$ so the timing trace will indicate a high number or, if just beginning a new cycle (the fifth), the number will be small.

Second: Determine which end of the time trace is the most active - to know what values to assign to the bits.

Third: Determine what interval defines a bit on the display so that all 10 bits can be located. The time of the first trace of each block of 16 identical traces is obtained, in seconds, by adding up the decimal value for each bit. See example, Figure 10.

---

* Group Report 21G-0006, "Primary Recording Instrumentation for Re-entry Physics Program, E. J. Peters.

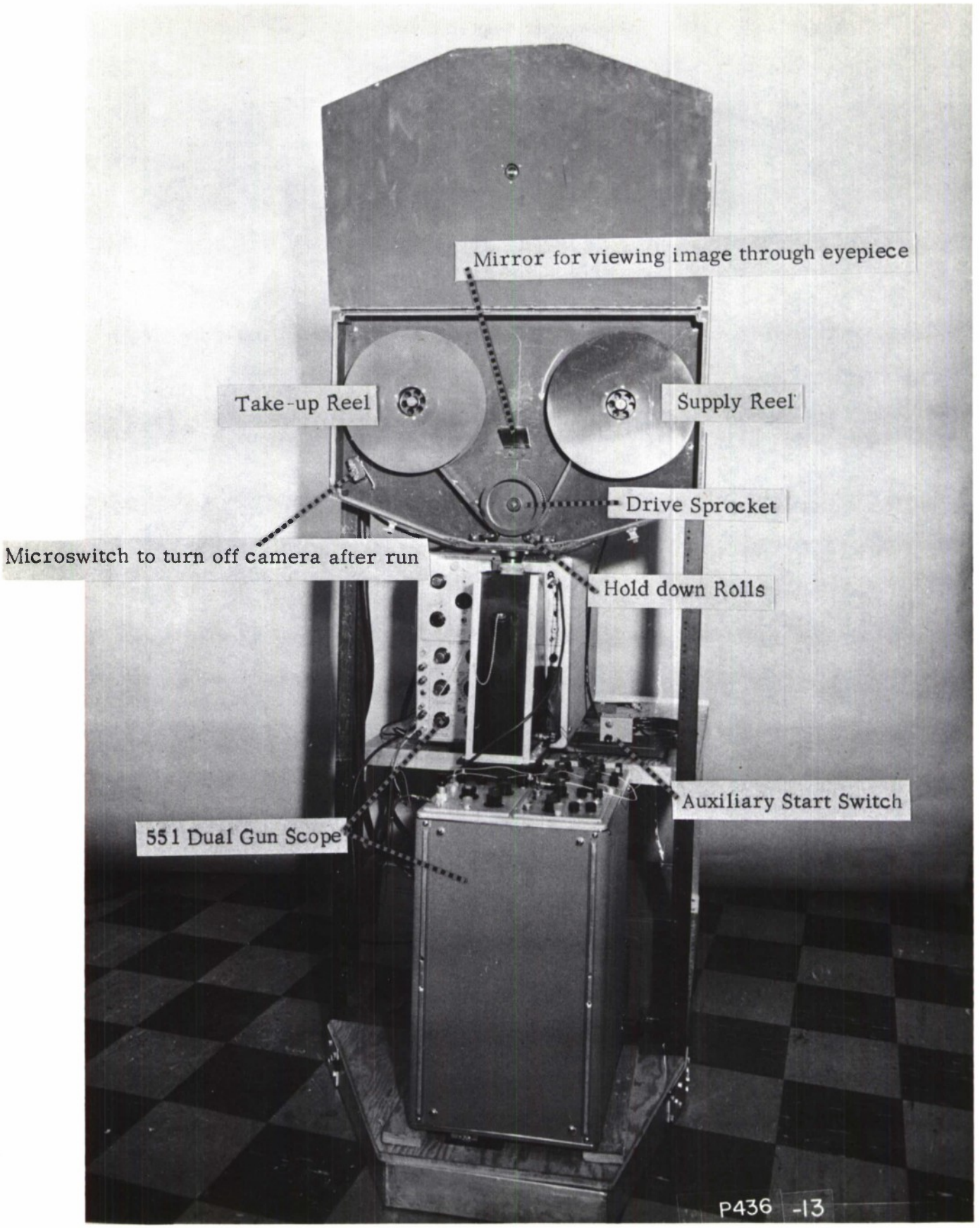

FIGURE 1 - Modified General Radio Camera

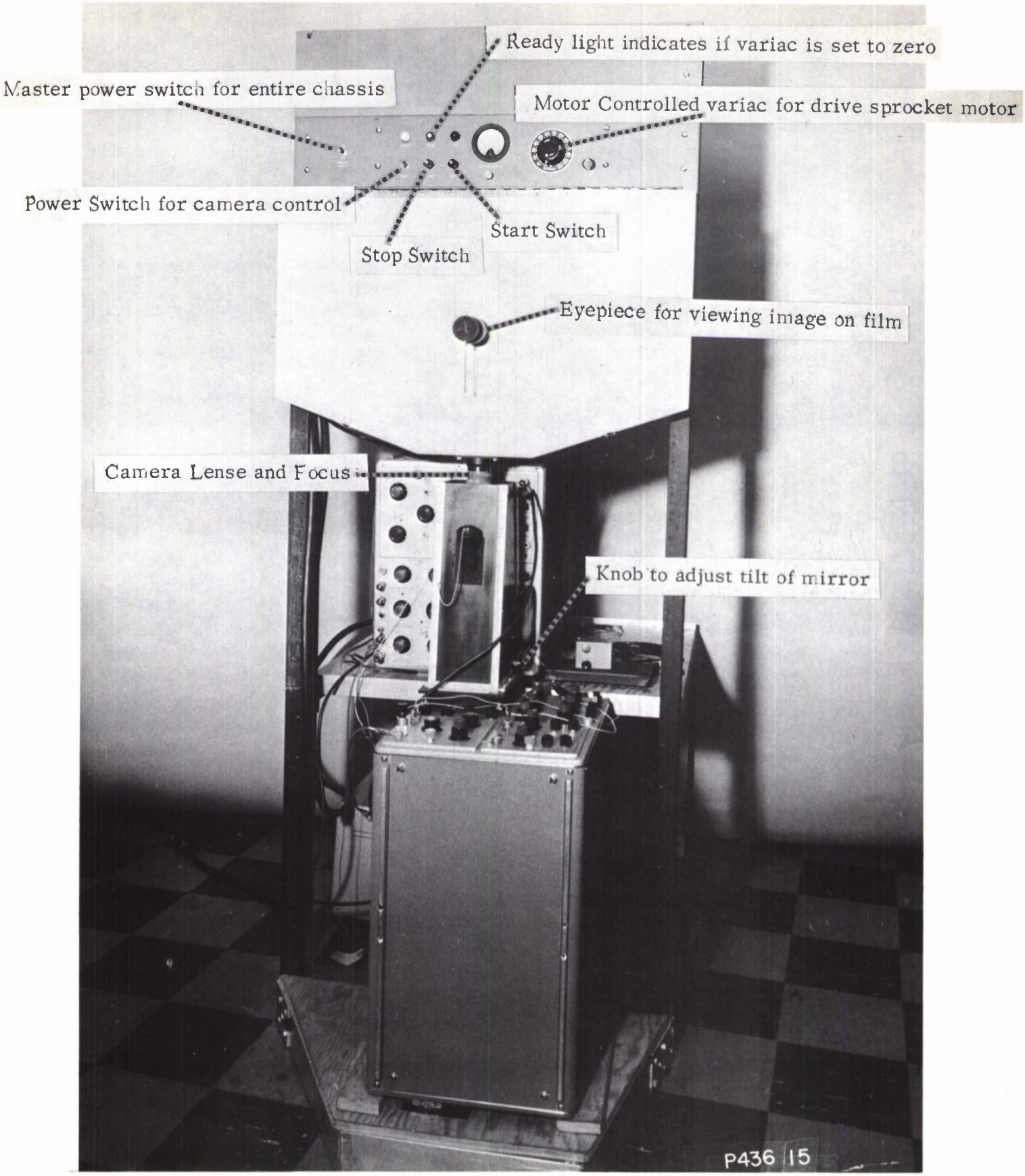

Figure 2 - Modified General Radio Camera with Cover Closed

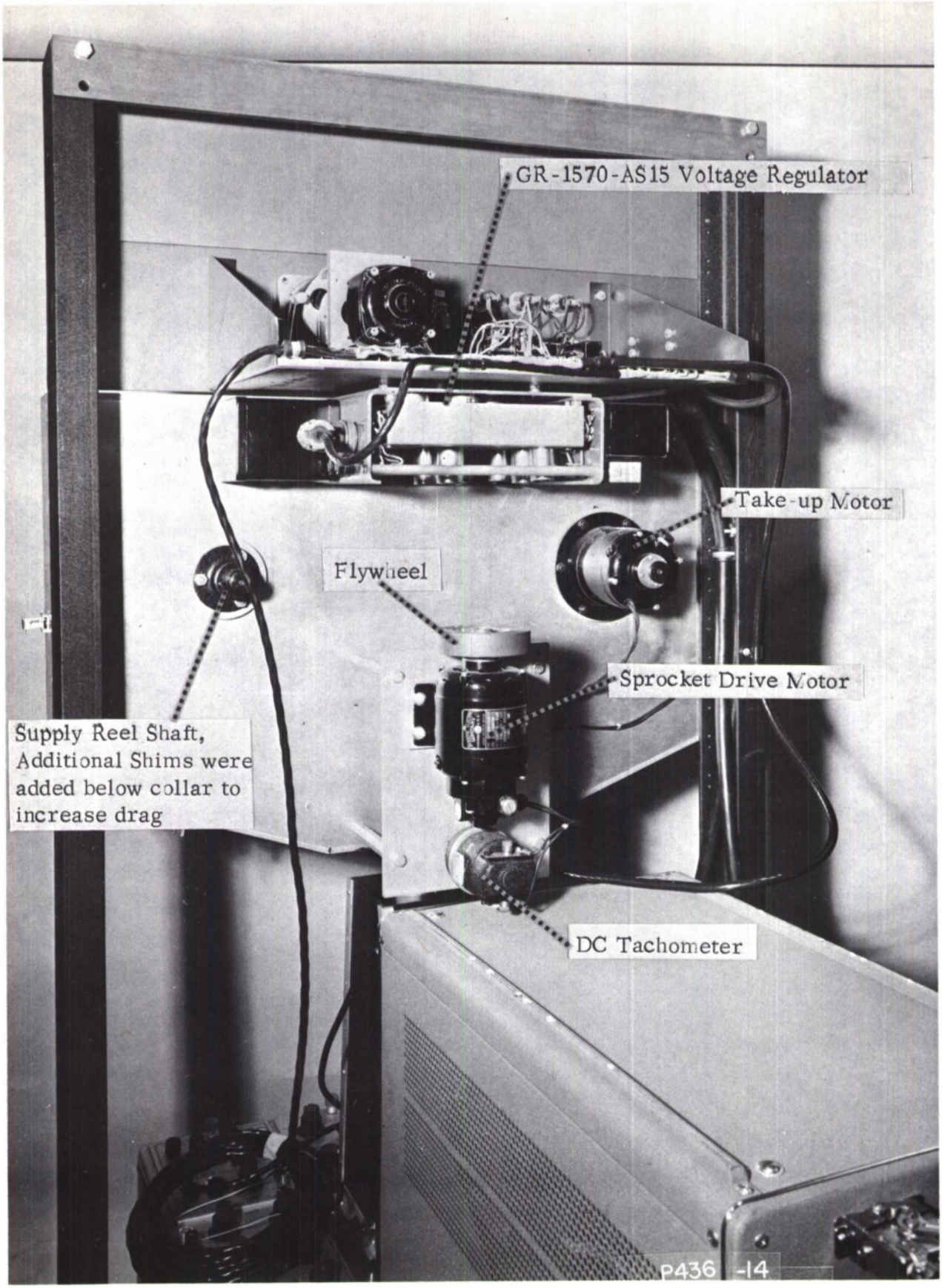

FIGURE 3 - General Radio Camera Set For 16 feet/second

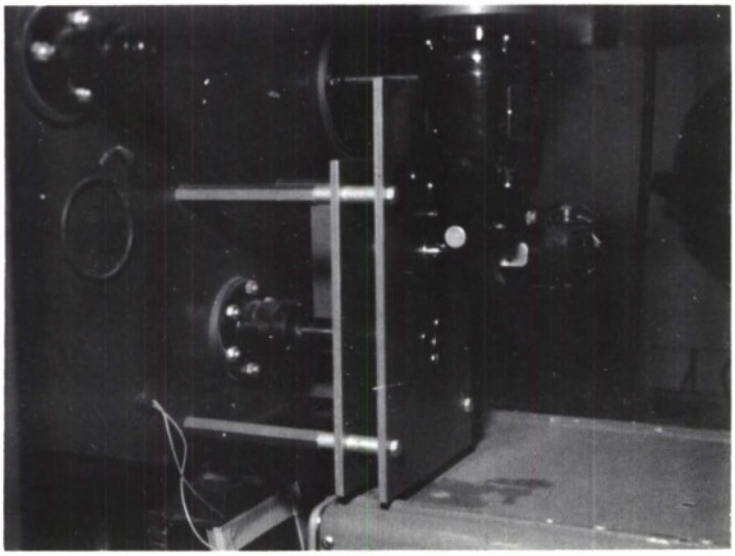

Figure 4

Rear View of GR Camera showing bearing plates supporting the auxiliary 4:1 gear reduction system . Camera speed - 4 feet/second

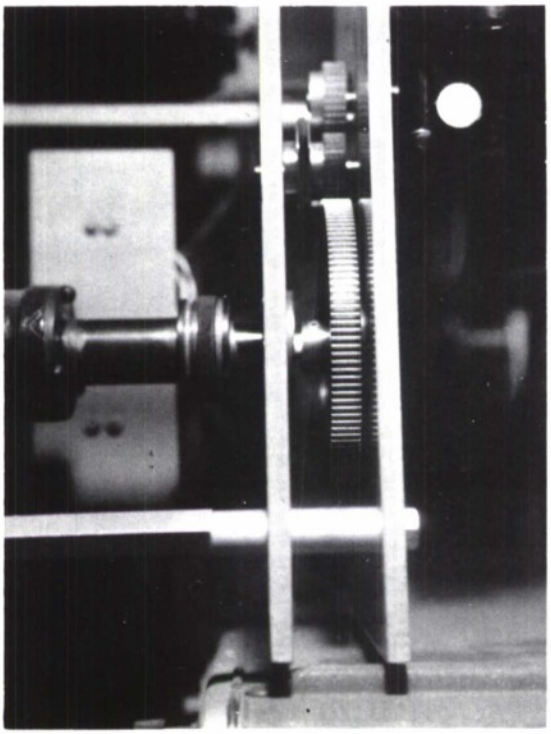

Left Side

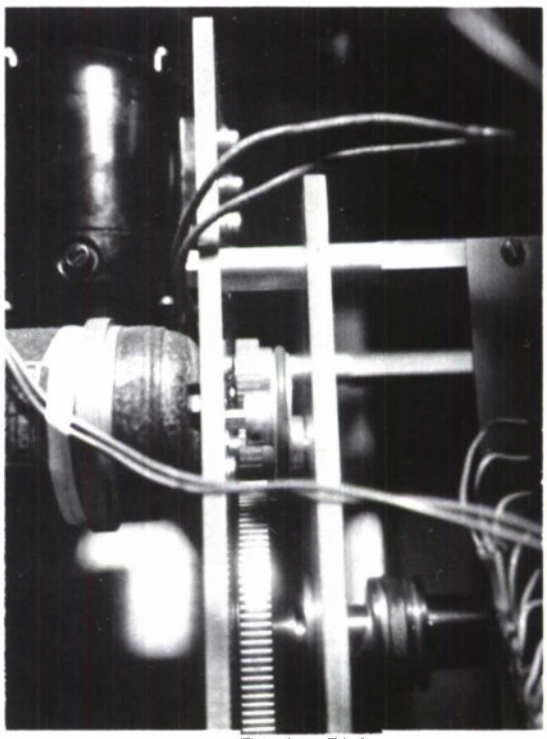

Right Side

FIGURE-5 ELEMENTARY SCHEMATIC DIAGRAM OF CONTROL UNIT

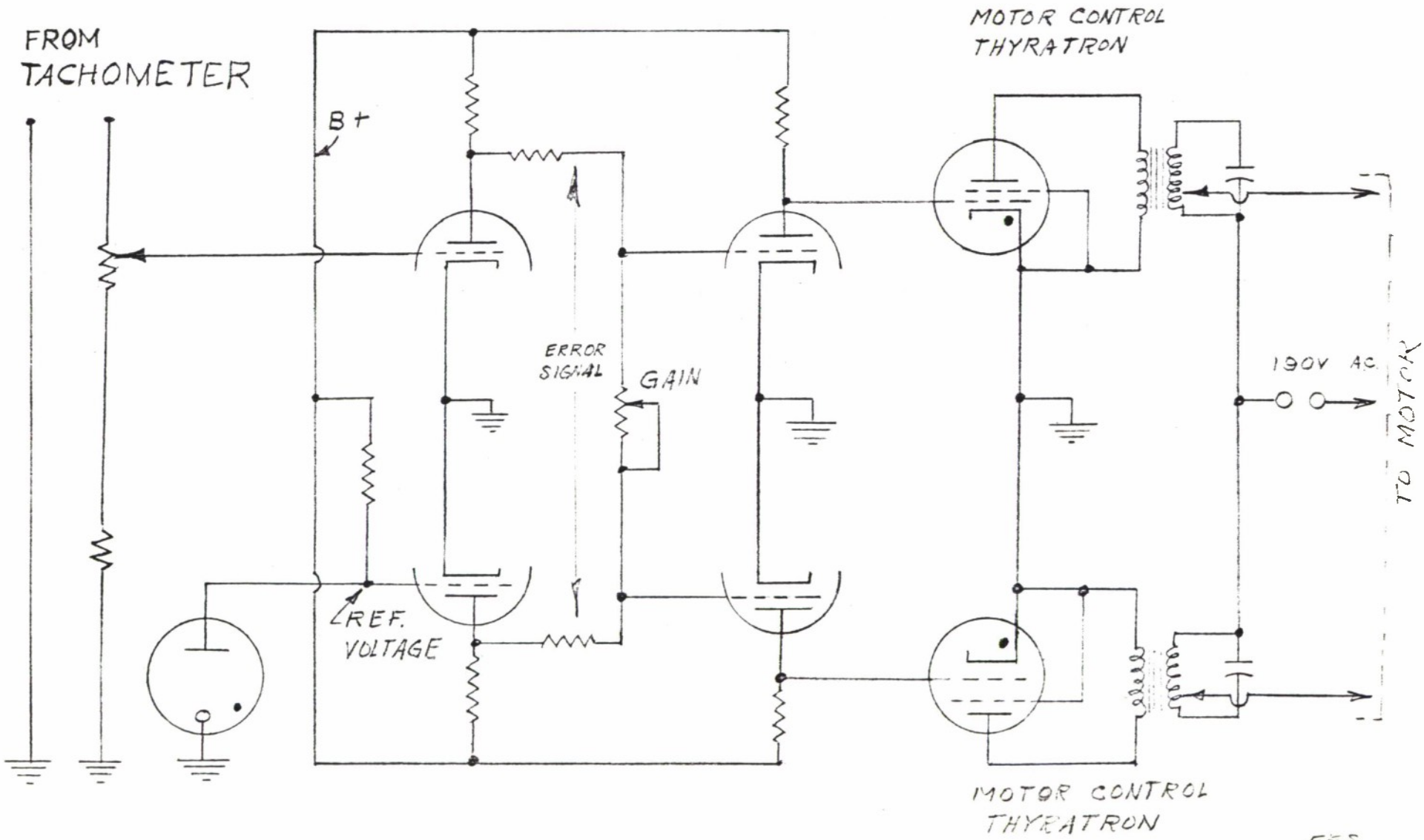

EES
6-6-59

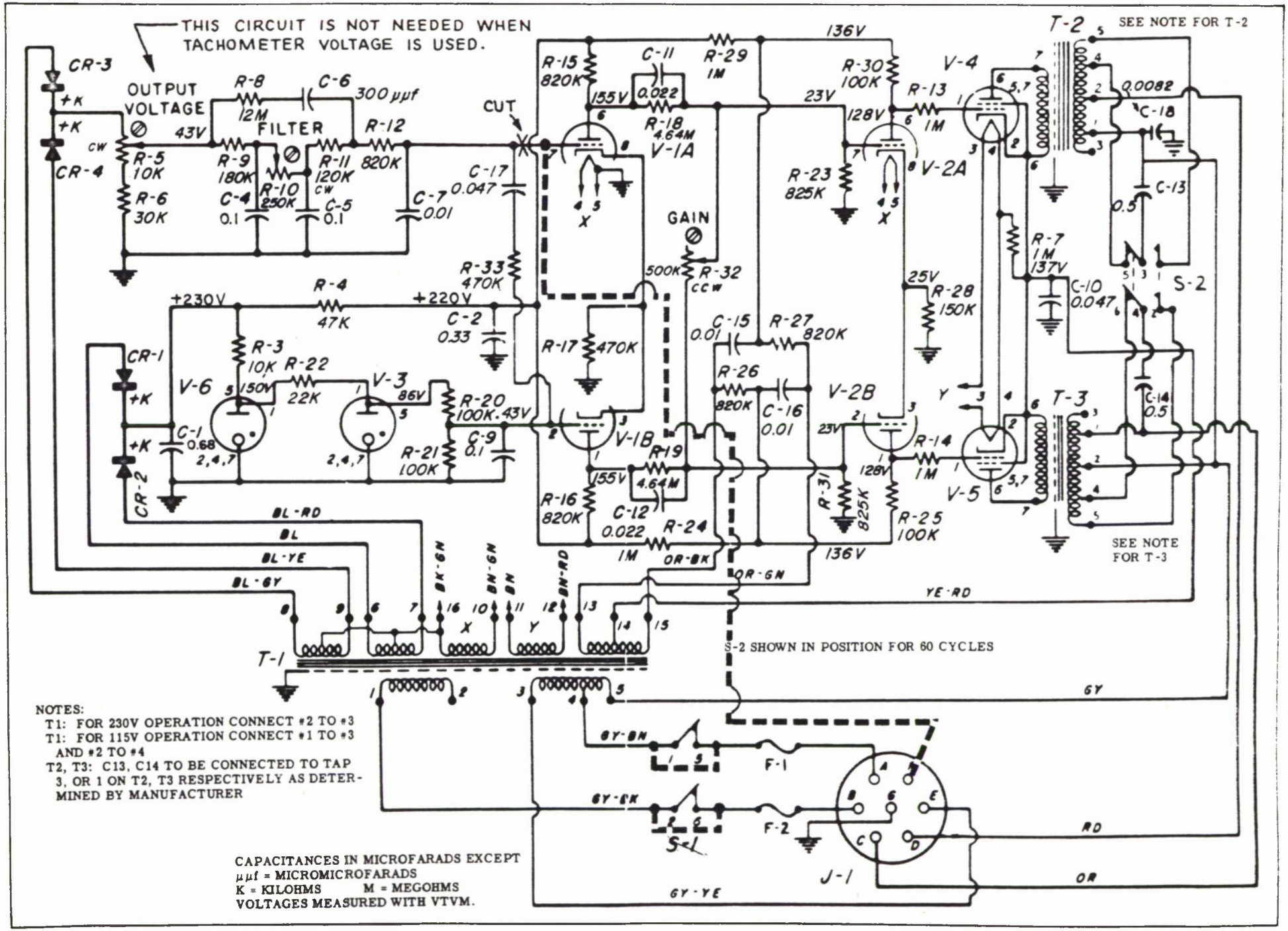

Figure 6– Schematic Wiring Diagram, Control Unit

FIGURE 7- CABLING DIAGRAM

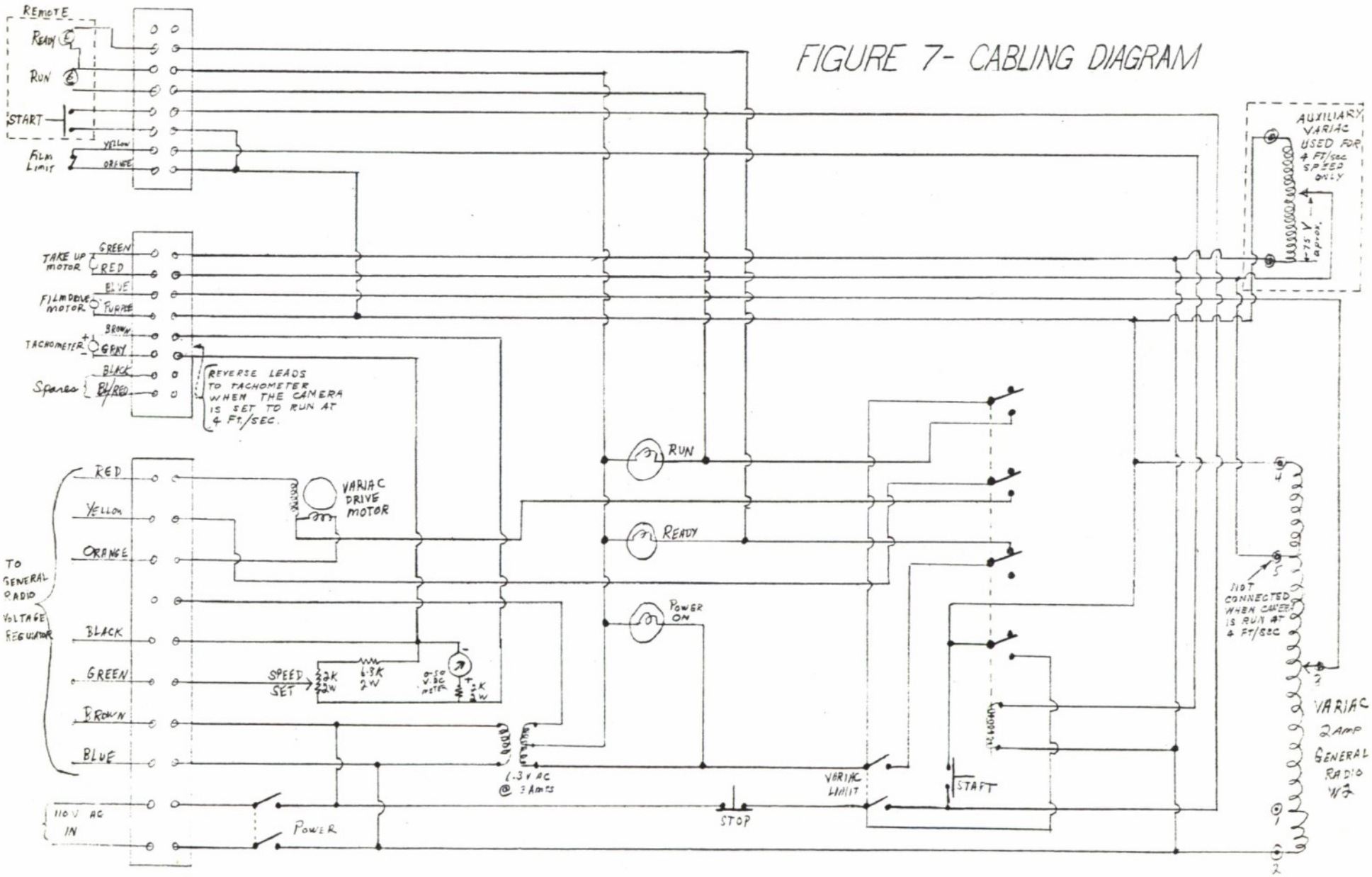

Stop to limit maximum rotation of variac

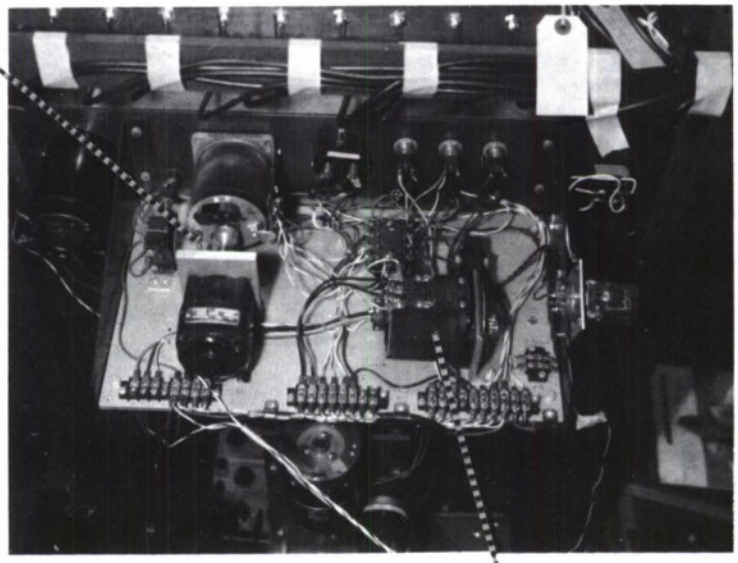

Auxiliary variac powers take-up motor when run at 4 feet/second

Figure 8 - Camera Control Unit, Top View

FIGURE 9 – HIGH SPEED CAMERA SET UP

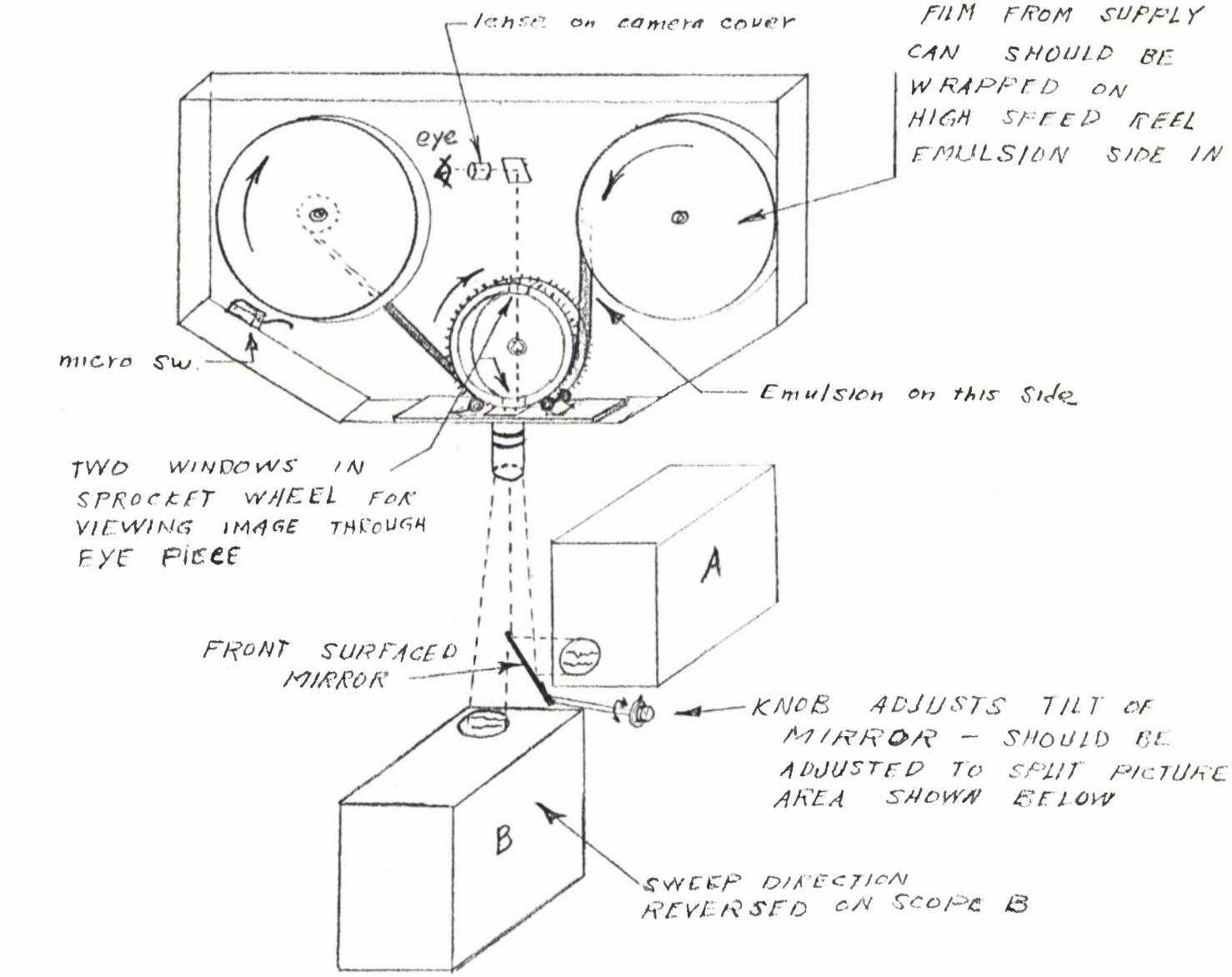

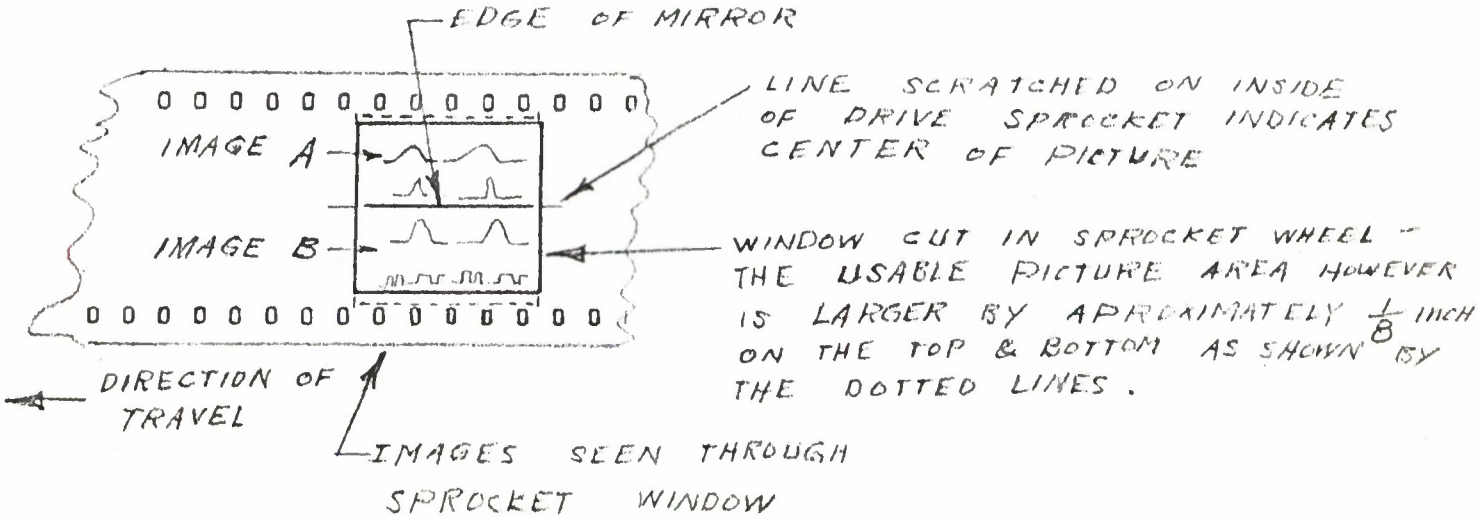

MOST SIGNIFICANT BIT MOST ACTIVE BIT

0 1 0 0 0 1 0 1 1 0

12.80
.80
.20
.10

Σ = 13.90 SEC

1 1 0 1 0 0 0 1 0 1

25.60
12.80
3.20
.20
.05

Σ = 41.85 SEC

IN BOTH EXAMPLES A DOWN PULSE INDICATES A "ONE". IF THE SCOPE POLARITY IS REVERSED THE OPPOSITE WOULD BE TRUE.

TIMING BITS HAVE THE FOLLOWING VALUES IN SECONDS :

MSB

25.6	12.8	6.4	3.2	1.6	0.80	0.40	0.20	0.10	.05

FIG-10 TIMING

DISTRIBUTION LIST

Division 2 Office

C. R. Wieser

Group 21

O. V. Fortier
L. C. Wilber
E. E. Schowengerdt
P. J. Harris
F. Magurn
Office (2)

Group 312

H. Rudolph (2)
L. Sullivan
H. Kasnitz
E. Tarbox
G. Pippert

Arbuckle Neck Site
MIT Lincoln Laboratory
Attention: J. C. Howard (4)
Post Office Box 12
Assawoman, Virginia

UNCLASSIFIED
Security Classification

DOCUMENT CONTROL DATA – R&D

(Security classification of title, body of abstract and indexing annotation must be entered when the overall report is classified)

1. ORIGINATING ACTIVITY *(Corporate author)* Lincoln Laboratory, M.I.T.	2a. REPORT SECURITY CLASSIFICATION Unclassified 2b. GROUP None

3. REPORT TITLE

Oscilloscope Cameras for Video Recording – Reentry Physics Program

4. DESCRIPTIVE NOTES *(Type of report and inclusive dates)*
Group Report

5. AUTHOR(S) *(Last name, first name, initial)*

Schowengerdt, E.E., Jr.

6. REPORT DATE 13 March 1961	7a. TOTAL NO. OF PAGES 20	7b. NO. OF REFS 1

8a. CONTRACT OR GRANT NO. AF 19(604)-7400 b. PROJECT NO. ARPA Order 13 c. d.	9a. ORIGINATOR'S REPORT NUMBER(S) 21G-0004 9b. OTHER REPORT NO(S) *(Any other numbers that may be assigned this report)* ESD-TR-70-92

10. AVAILABILITY/LIMITATION NOTICES

This document has been approved for public release and sale; its distribution is unlimited.

11. SUPPLEMENTARY NOTES None	12. SPONSORING MILITARY ACTIVITY Advanced Research Projects Agency, Department of Defense

13. ABSTRACT

This report describes the video recording cameras being used at the MIT Arbuckle Neck site in connection with the Reentry Physics Experiment.

14. KEY WORDS

reentry physics
oscilloscope cameras
video recording
Wallops Island

UNCLASSIFIED
Security Classification