AD

AD706219

Research and Development Technical Report
ECOM-3243

RAPID INITIALIZATION OF INERTIAL NAVIGATION SYSTEMS THROUGH PARAMETER ESTIMATION

by

Joseph A. Dasaro

March 1970

D D C
RECEIVED
MAY 25 1970
C

DISTRIBUTION STATEMENT (1)

This document has been approved for public release and sale; its distribution is unlimited.

ECOM

Reproduced by the
CLEARINGHOUSE
for Federal Scientific & Technical
Information Springfield Va. 22151

UNITED STATES ARMY ELECTRONICS COMMAND · FORT MONMOUTH, N.J.

104

ACCESSION for
CFSTI WHITE SECTION ☑
DDC BUFF SECTION ☐
UNANNOUNCED ☐
JUSTIFICATION .....
BY .....
DISTRIBUTION/AVAILABILITY CODES
DIST. AVAIL. and/or SPECIAL
1

NOTICES

Disclaimers

The findings in this report are not to be construed as an official Department of the Army position, unless so designated by other authorized documents.

The citation of trade names and names of manufacturers in this report is not to be construed as official Government indorsement or approval of commercial products or services referenced herein.

Disposition

Destroy this report when it is no longer needed. Do not return it to the originator.

Reports Control Symbol OSD-1366

RESEARCH AND DEVELOPMENT TECHNICAL REPORT

ECOM-3243

RAPID INITIALIZATION OF INERTIAL NAVIGATION SYSTEMS THROUGH PARAMETER ESTIMATION

By

Joseph Anthony Dasaro

Department of the Army Task No. 1H1 63207 D235 08 09

NAVIGATION AND LANDING TECHNICAL AREA

AVIONICS LABORATORY

This document has been
approved for public release
and sale; its distribution
is unlimited.

March 1970

U. S. ARMY ELECTRONICS COMMAND
FORT MONMOUTH, NEW JERSEY

ABSTRACT
RAPID INITIALIZATION OF INERTIAL NAVIGATION SYSTEMS
THROUGH PARAMETER ESTIMATION

The accuracy of an aircraft inertial navigation system depends upon the accuracy with which the system is initially aligned. One procedure for initial alignment involves the use of an external reference. This method utilizes equipment which is much too elaborate for normal operational use. An alternate procedure uses the system's inertial sensors in a self-contained method. If sufficient time were available, the self-contained method could achieve accuracies commensurate with the sensor accuracies; however, in an operational environment it is usually necessary to sacrifice some accuracy in the interest of achieving a more rapid initiation. This dissertation investigates the methods presently available for initialization of an inertial platform in an azimuth wander or free azimuth instrumentation and presents a new method for rapid initialization. The paramount problem is the determination of the initial azimuth angle in minimum time in the presence of random gyro drifts, random accelerometer drifts, and measurement noise.

A linear error model of the inertial platform is developed. The model contains all significant cross-coupling terms. The inertial component random drifts are modeled as time correlated random processes and the measurement noise is represented as a white Gaussian process. State space equations for the error model are then formulated. The problem of determining the initial azimuth wander angle is then identified as a parameter

estimation problem where the parameter can assume any of a continuum of values (from 0 to 2π). The two methods of solving parameter estimation problems currently available in the literature are presented. The first method allows parameter estimation when the parameter can assume a continuum of values; however, the method is not time optimal. The second method examined is time optimal; however, it is constrained to problems where the parameter can assume only a finite number of possible values. The second method is then extended to permit time optimal parameter estimation where the parameter can assume a continuum of values.

The parameter estimation method developed utilizes an array of minimum variance filters. Each filter (referred to as an elemental filter) is initialized with an estimate of the unknown parameter. One element of the filter state vector is related to the parameter such that feedback can be used to continually update the estimate of the parameter. The elemental filters' parameter values are then combined to form the overall parameter estimate. A simple weighting scheme is used in the combining procedure. A variance term for the parameter estimate is also computed so that the initialization procedure can be terminated when a predetermined variance is achieved.

The equations for a discrete minimum variance filter with internal feedback are then presented. A computer algorithm is developed for the elemental filter of the parameter estimator.

A method of applying the parameter estimation technique to determine the initial azimuth wander angle is then formulated.

The platform controller is then developed and the overall system described.

A computer simulation of the rapid initialization of an azimuth wander system through the use of the parameter estimation technique is discussed. Results of the simulation are presented showing reduction of an initial wander angle error variance from $(1.5 \text{ degrees})^2$ to $(6 \text{ minutes of arc})^2$ after approximately three minutes of real time. This represents a twofold improvement in initialization time over a state-of-the-art system presently under evaluation.

FOREWORD

This document was originally submitted to the faculty of the Graduate School of Arts and Sciences of the University of Pennsylvania in partial fulfillment of the requirements for the Degree of Doctor of Philosophy.

Table of Contents

		Page
I	Introduction	1
II	The System Error Model	10
III	Formulation of State Space Equations	26
IV	Parameter Estimation	32
V	The Elemental Filter	41
VI	The System	48
VII	Rapid Initialization Simulation	52
VIII	Conclusions	58
APPENDIX A.	Computer Simulation Program	60
APPENDIX B.	Computer Printout	77
Bibliography		87
Glossary		89
Index		92

List of Illustrations

Figure		Page
2-1	Resolution of the Earth's Rate into Horizontal and Vertical Components at a Point on the Navigation Coordinate Frame	11
2-2	Azimuth Wander Angle	12
2-3	Block Diagram of System Error Model without Cross-Coupling Effects	17
2-4	Block Diagram of System Error Model with Cross-Coupling Effects	19
2-5	Shaping Filter	20
2-6	System Error Model	24
4-1	Matrix Block Diagram of System Error Model	33
4-2	Time Optimal Parameter Estimator (Magill)	35
4-3	Continuous Time Optimal Parameter Estimator	39
5-1	Block Diagram of Elemental Filter	45
5-2	Elemental Filter Computer Algorithm	46
6-1	Block Diagram of Rapid Initialization Technique	51
7-1	Azimuth Error versus Alignment Time for Gyrocompassing Thermally Compensated Experimental Platform	53
7-2	Average Azimuth Error for the Parameter Estimator versus Alignment Time (15 runs)	56
7-3	Variance of the Parameter Estimator Error versus Alignment Time	57
7-4	Initial Weighting Distribution and Distribution after 3 Minutes	57
TABLE 7-1.	Final Azimuth Wander Angle Error in Minutes of Arc	56

I. Introduction

The accuracy of an aircraft inertial navigation system depends upon the accuracy with which the system is initially aligned.[1] One procedure for initial alignment involves the use of an external reference. This method utilizes equipment which is much too elaborate for normal operational use. An alternate procedure uses the system's inertial sensors in a self contained method. If sufficient time were available, the self contained method could achieve accuracies commensurate with the sensor accuracies; however, in an operational environment it is usually necessary to sacrifice some accuracy in the interest of achieving a more rapid initiation. In this dissertation the problem of determining the initial orientation of an inertial platform is investigated.

An inertial navigation system consists of three sub-systems: the inertial measurement unit or sensor package, the computer in which the navigation equations are solved, and the display. Prior to operation as an autonavigator, two sets of quantities are required as initial conditions for the inertial navigation system equations.

First, the true initial position of the inertial measurement unit in terms of a navigation system coordinate frame must be accurately known. In addition, the angular orientation of the axes of the inertial measurement unit with respect to the navigation system coordinate frame must also be accurately known. In this investigation it is assumed that initial position is known a priori and the angular orientation is to be determined.

At this point it is well to define the various coordinate frames which will be referred to in the ensuing paragraphs. First, an inertial frame with its origin at the center of the earth will be the basic fixed frame. The navigation reference frame will be the conventional latitude-longitude frame, which is also earth centered but is rotating with respect to the fixed frame. At a point in this navigation frame (a specific latitude-longitude point on the earth's surface) a locally level triad can be defined by X_n, Y_n, Z_n where X_n is level and pointing east, Y_n is level and pointing north, and Z_n is up. Finally, the inertial measurement unit will have imbedded a set of axes X_p, Y_p, Z_p which are mutually orthogonal. The angular orientation of these inertial measurement unit axes with respect to the local level triad must be accurately known for proper initialization.

The inertial measurement unit in this investigation is the usual Schuler-tuned gimballed platform for terrestrial navigation.[2] Within the platform assembly are mounted three gyros, the sensitive axes of which form a mutually orthogonal triad, and two accelerometers. When in operation, two of the sensitive gyro axes are oriented in the horizontal or locally level plane and the sensitive axes of the two accelerometers are collinear with these gyros' sensitive axes. The third gyro has its sensitive axis in the vertical direction and is referred to as the azimuth gyro. With respect to the local level reference triad, the usual convention is to have one of the level gyros' sensitive axes pointed east and the other pointed north. These gyros are sometimes

referred to as the east gyro and north gyro respectively, and define the X_p and Y_p axes of the inertial measurement unit. The azimuth gyro sensitive axis (pointed up) defines the inertial measurement unit Z_p axis.

For a stationary system (that is, no vehicle velocity), one method for obtaining the initial angular orientation of the level X_p, Y_p platform axes with respect to the X_n, Y_n axes is through use of an external true north reference. The orientation of the reference in the local level axes must be fixed and accurately known. The information transfer from the external reference is accomplished through use of precision electronic theodolites and mirrors located on the platform. This method of initiation is limited to operational environments which can support this cumbersome alignment procedure. For most land based tactical aircraft a self contained alignment capability is necessary to provide operational flexibility.

The primary method for self contained alignment of an inertial platform is commonly referred to as gyrocompassing.[3] For a stationary system, gyrocompassing consists of two phases: platform leveling and azimuth alignment. The simplest form of leveling consists of feeding the accelerometer gravity measurements to the appropriate gyro torquers. The platform is then torqued until the sensitive axes of the level gyros are in the locally level plane. The control loop gains and compensation networks are set for the desired response.[4] The more complex azimuth alignment

phase is described in the following paragraphs.

To maintain the platform orientation in the local level frame, it is necessary to torque the platform axes at the same rate that the local level frame is moving with respect to the basic fixed frame. Otherwise, the platform would maintain its orientation in the inertial or fixed frame. If the platform X_p and Y_p axes are oriented east and north in the local level frame, a torquing rate must be applied to the north pointing gyro to maintain the platform in a level position. No torquing of the east pointing gyro is necessary since its sensitive axis is orthogonal to the rotation.

If the X_p and Y_p platform axes are not aligned to east (X_n) and north (Y_n) in the local level frame, the platform will appear to be tilting when viewed in this frame. This tilting property is used to align the X_p and Y_p platform axes with the X_n and Y_n local level axes in the azimuth alignment phase of gyrocompassing.

When the platform X_p axis is not coincident with X_n in the local level frame, a rotation about the X_p axis as viewed in the local level frame will cause the north accelerometer to sense a component of gravity. This signal is then applied to the Z_p or azimuth gyro torquer. The platform is then rotated until the X_p axis is brought into coincidence with the local level X_n axis and gyrocompassing completed.

In order to maintain the platform level, it is necessary to apply torquing signals to both the north gyro and the azimuth gyro

at latitudes other than the equator. The vertical component appears because, when viewed from a point on the earth's surface, the earth's rotation vector can be resolved into a horizontal or level component and a vertical component. This level component is greatest at the equator and zero at the poles, varying in a sinusoidal manner. The azimuth alignment phase of gyrocompassing is more difficult in the polar regions due to the smaller level component of the earth's rotation.[5]

Some inertial platforms in use today are not aligned in azimuth. Instead, the angle between the platform Y_p axis and local level Y_n is determined. This angle is generally referred to as the "azimuth wander" angle and the inertial system implementation as an azimuth wander mechanization.[6,7]

In an azimuth wander mechanization, torquing signals, which maintain the platform level, are applied to both the Y_p and X_p gyros. The torquing signals are determined by using the azimuth wander angle to resolve the level angular earth's rate into components along the actual orientation of the level platform axes. The vertical component of the earth's angular rate is integrated and the azimuth wander angle continuously corrected. This dissertation will consider a method for rapid determination of the initial azimuth wander angle.

Initial alignment of a locally level azimuth wander inertial navigator is normally accomplished in either of the two ways previously discussed, that is, through use of an external reference

or a modified form of gyrocompassing. When an external reference is utilized the platform is first leveled, and then the actual initial azimuth wander angle determined through use of optical instruments. In modified gyrocompassing, a coarse estimate of the azimuth wander angle is initially obtained from an independent reference, such as a magnetic compass. The platform is then leveled and this estimate of the azimuth wander angle used for the computation of the angular rates to be applied to the level gyro torquers. If tilting (with respect to the local level axes) occurs, the wander angle is updated. The updated value is based on accelerometer gravity measurements. The platform is then re-leveled and new torquing rates computed for the level gyro torquers. This sequence is repeated until the accelerometer measurements remain below a pre-determined level for a fixed amount of time.

Self contained alignment schemes generally require between twenty and thirty minutes of time to achieve an initial azimuth accuracy on the order of six minutes of arc.[8] Three factors which affect alignment time and accuracy are inertial component warm-up behavior, random inertial component drifts, and measurement noise.[9,10] During the past few years, significant accomplishments in the area of thermal modeling of inertial component drifts during warm-up have been reported[11,12], and the availability of the digital airborne computer has made thermal compensation feasible. This dissertation presents a method of initiating a

thermally compensated azimuth wander inertial system in minimum time (less than five minutes).

The subsequent paragraphs present the organization and contents of this dissertation.

First, a linear error model of the inertial platform in the azimuth wander mechanization is developed. The model contains all significant cross-coupling terms. The inertial component random drifts are modeled as time correlated random processes and the measurement noise is represented as a white Gaussian process.

Next, state space equations for the error model are formulated. The problem of determining the initial azimuth wander angle is then identified as a parameter estimation problem where the parameter can assume any of a continuum of values (from 0 to 2π).

The two methods of solving parameter estimation problems currently available in the literature are presented. The first method allows parameter estimation when the parameter can assume a continuum of values; however, the method is not time opitmal. The second method examined is time optimal, however, it is constrained to problems where the parameter can assume only a finite number of possible values. The second method is then extended to permit time optimal parameter estimation where the parameter can assume a continuum of values.

The parameter estimation method developed utilizes an array of minimum variance filters. Each filter (referred to as an

elemental filter) is initialized with an estimate of the unknown parameter. One element of the filter state vector is related to the parameter such that feedback can be used to continually update the estimate of the parameter. The elemental filters' parameter values are then combined to form the overall parameter estimate. A simple weighting scheme is used in the combining procedure. A varience term for the parameter estimate is also computed so that the initialization procedure can be terminated when a predetermined variance is achieved.

The equations for a discrete minimum variance filter with internal feedback are then presented. A computer algorithm is developed for the elemental filter of the parameter estimator.

A method of applying the parameter estimation technique to determine the initial azimuth wander angle is then formulated. The platform controller is developed and the overall system described.

A computer simulation of the rapid initialization of an azimuth wander system through the use of the parameter estimation technique is discussed. Results of the simulation are presented showing reduction of an initial wander angle error variance from $(1.5 \text{ degrees})^2$ to $(6 \text{ minutes of arc})^2$ after approximately three minutes of real time.

Conclusions of the investigation are then presented.

References Cited in I. Introduction

[1] O'Donnell, C.F., "Inertial Navigation," Journal of the Franklin Institute, Vol. 266, No. 4 (Part I), Oct., and No. 5 (Part II), November 1958. Part II, section 2.

[2] Broxmeyer, C., Inertial Navigation System, McGraw-Hill Book Company, 1964. Chapter 7, System A.

[3] Thomas, I.L., Notes on the Fundamental Problems Involved In Determining True North By Gyroscopic Methods, Technical Note No. I.E.E. 56, Royal Aircraft Establishment, August 1964.

[4] Brown, R.G., Notes On Inertial Navigation, Electrical Engineering Department, Iowa State University, June 1968. Section 10.

[5] O'Donnell, C.F., op, cit.. Part II, Page 378.

[6] Pitman, G.R. Jr., Inertial Guidance, John Wiley and Sons, 1962. Page 157.

[7] Broxmeyer, C., op. cit.. Chapter 7, system c.

[8] Cannon, R.H. Jr., "Alignment of Inertial Systems by Gyrocompassing - Linear Theory", Journal of the Aerospace Sciences, Vol. 28, Nov. 1961. Figure 9.

[9] Martin, E.H., Bement, W.A., et al, Study and Experimentation of Rapid Reaction Inertial Navigation Systems, Autonetics Technical Report AFAL-TR-67-122, Nov. 1967.

[10] Pitman, G.R. Jr., op, cit.. Chapter 8.

[11] Powers, H.B. Jr., Henderson, V.D., Analytic Thermal Compensation of Fast Reaction Inertial Navigation Systems, Autonetics Technical Report X6-957/3111, April 1966.

[12] Bachman, K.L., Determination and Application of Inertial Component Warm-Up Characteristics, Naval Air Development Center Report AM-6721, August 1967.

II. The System Error Model

As stated in the introduction, the distinguishing characteristic between the conventional Schuler-tuned gimballed inertial system and an azimuth wander system is the absence of a torquer on the vertical or azimuth gyro. Both systems normally operate by keeping their platforms locally level and use the rotating navigation coordinate frame as a geographic reference. Due to the absence of the azimuth gyro torquer in the azimuth wander mechanization, the arbitrary azimuth angle must be precisely known. The azimuth wander angle is used in a rotation matrix to transform platform measurements from the inertial measurement unit axes (X_p, Y_p, Z_p) to the local level navigation axes (X_n, Y_n, Z_n).

Due to the earth's rotation the navigation reference frame rotates about the fixed inertial frame. This rate of rotation is referred to as the earth's rate and will be represented by Ω. For a point on the navigation axes, the level and vertical components of Ω can be computed by

$$\Omega y_n = \Omega \cdot \cos \lambda \qquad 2\text{-}1$$

$$\Omega x_n = 0$$

$$\Omega z_n = \Omega \cdot \sin \lambda \qquad 2\text{-}2$$

where λ is the latitude of the point and the subscripts y_n, x_n, and Z_n represent directions along the local level triad. Figure 2-1 illustrates the resolution of the earth's rate into horizontal and vertical components at a point, P, on the earth's surface.

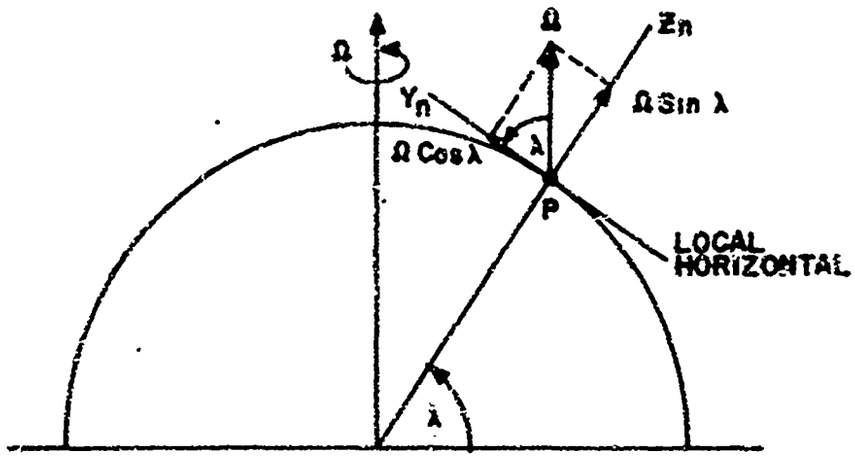

Figure 2-1. Resolution of the Earth's Rate into Horizontal and Vertical Components at a Point on the Earth's Surface.

The platform axes (X_p, Y_p, and Z_p) tend to remain fixed with respect to the fixed inertial frame. To maintain the platform axes fixed in the navigation frame it is necessary to apply a signal to the gyro torquers which will cause the platform to precess at the angular rates computed in 2-1 and 2-2. If the platform is initially level and Y_p pointing north, the application of these angular torquing rates will maintain the platform level and north pointing.

For an azimuth wander mechanization the orthogonal platform level axes (X_p, Y_p) will be oriented arbitrarily with respect to the local level navigation axes. The azimuth wander angle, ϕ_z, is defined as the angle which the local level axes must be rotated through, in a counter-clockwise direction, to become coincident with the platform level axes. Figure 2-2 illustrates an azimuth

wander angle.

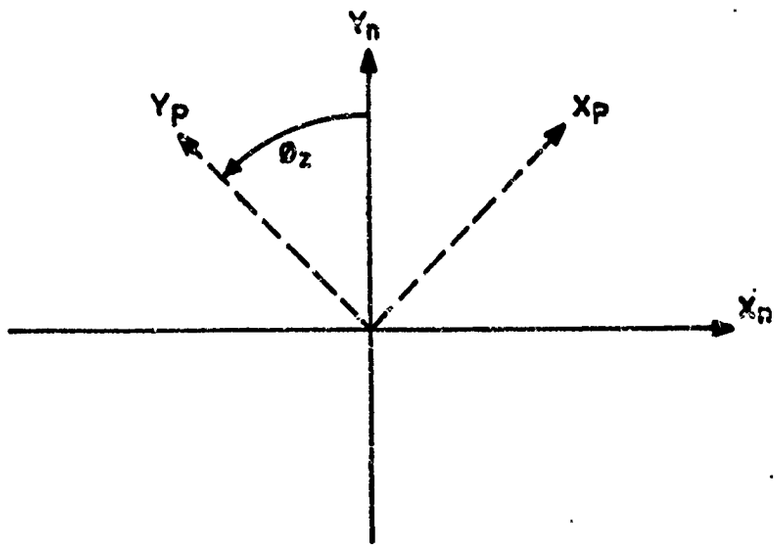

Figure 2-2. Azimuth Wander Angle.

In order to maintain the platform level it is necessary to apply the level earth's rate, which is directed along Y_n, to the level platform gyros. Therefore, it is necessary to resolve Ω_{y_n} into components along the platform axes in accordance with

$$\Omega_{y_p} = \Omega_{y_n} \cdot \cos \phi_z \qquad 2\text{-}3$$

$$\Omega_{x_p} = \Omega_{y_n} \cdot \sin \phi_z \qquad 2\text{-}4$$

Expressing 2-3 and 2-4 in the form of a rotation matrix yields

$$\begin{bmatrix} \Omega_{y_p} \\ \Omega_{x_p} \end{bmatrix} = \begin{bmatrix} \cos \phi_z & -\sin \phi_z \\ \sin \phi_z & \cos \phi_z \end{bmatrix} \begin{bmatrix} \Omega_{y_n} \\ 0 \end{bmatrix} \qquad 2\text{-}5$$

If the vertical component of earth's rate Ω_{z_n} were applied to the azimuth gyro torquer the initial arbitrary angle, ϕ_z, would be maintained. The absence of the azimuth gyro torquer, however, makes it necessary to continuously change the value of ϕ_z by

$$\phi_z(t) = \int_0^t \Omega_{z_n} \, dt + \phi_z(0) \qquad 2\text{-}6$$

Hence, the value of ϕ_z in the rotation matrix must be continuously updated.

The rotation matrix in equation 2-5 is extremely important in an azimuth wander mechanization. Aside from resolving level earth's rate into components along the platform axes, the inverse of this matrix is the transformation from the level platform axes to the level navigation axes. Therefore, the platform acceleration measurements and platform velocities must be operated on by this transformation matrix prior to use in the navigation mode.

After platform leveling, an initial estimate of ϕ_z is used in the rotation matrix. This estimate is designated $\hat{\phi}_z$, and the difference between ϕ_z and $\hat{\phi}_z$ is

$$\Delta\phi_z = \phi_z - \hat{\phi}_z \qquad 2\text{-}7$$

where $\Delta\phi_z$ is the azimuth wander error angle.

Platform level axes torquing rates are then computed using equation 2-5 with ϕ_z replaced by $\hat{\phi}_z$. The computed torquing signals are then applied to the level gyro's torquers. The error in torquing for each level gyro due to the difference between ϕ_z and $\hat{\phi}_z$ is

$$E_y = \Omega_{y_n} \cdot \cos\hat{\phi}_z - \Omega_{y_n} \cdot \cos\phi_z \qquad 2\text{-}8$$

$$E_x = \Omega_{y_n} \cdot \sin\hat{\phi}_z - \Omega_{y_n} \cdot \sin\phi_z \qquad 2\text{-}9$$

where E_y is the error in earth rate's torquing to the Y gyro, and E_x is the error in torquing to the X gyro.

Using equation 2-7 to substitute for $\hat{\phi}_z$ in equations 2-8 and 2-9 results in

$$E_y = \Omega\, y_n \cdot \cos(\phi_z - \Delta\phi_z) - \Omega\, y_n \cdot \cos\phi_z \qquad 2\text{-}10$$

$$E_x = \Omega\, y_n \cdot \sin(\phi_z - \Delta\phi_z) - \Omega\, y_n \cdot \sin\phi_z \qquad 2\text{-}11$$

Using simple trigonometric identities for the expressions with angle difference yields

$$E_y = \Omega\, y_n \left[\cos\phi_z \cos\Delta\phi_z + \sin\phi_z \sin\Delta\phi_z - \cos\phi_z\right] \qquad 2\text{-}12$$

$$E_x = \Omega\, y_n \left[\sin\phi_z \cos\Delta\phi_z - \cos\phi_z \sin\Delta\phi_z - \sin\phi_z\right] \qquad 2\text{-}13$$

An initial coarse estimate of ϕ_z can be obtained from a magnetic compass. After correction for magnetic variation, the azimuth wander error angle, $\Delta\phi_z$, is of the order of 1.5 degrees (standard deviation). At the conclusion of the initiation process an error of 0.1 degrees (standard deviation) is desirable to minimize the navigational error due to incorrect initial azimuth information.[1]

The azimuth wander error angle, $\Delta\phi_z$, will therefore range in value from an initial worst case value of approximately 4.5 degrees (three standard deviations) to approximately 0.1 degrees at the conclusion of the initiation process. Under these circumstances the following small angle approximations can be used

$$\cos\Delta\phi_z = 1$$
$$\sin\Delta\phi_z = \Delta\phi_z \qquad 2\text{-}14$$

Equations 2-12 and 2-13 can now be rewritten as

$$E_y = \Omega\, y_n \cdot \sin\phi_z \cdot \Delta\phi_z \qquad 2\text{-}15$$

$$E_x = -\,\Omega\, y_n \cdot \cos\phi_z \cdot \Delta\phi_z \qquad 2\text{-}16$$

These torquing errors cause the platform to tilt in the navigation frame. Let $\Delta \phi_x$ and $\Delta \phi_y$ represent the angles between the locally level plane and the platform's Y_p and X_p axes. That is, $\Delta \phi_x$ is the angle between Y_p and the locally level plane measured by a right-handed rotation about X_p, and $\Delta \phi_y$ is the angle between X_p and the locally level plane measured by a right-handed rotation about Y_p. After the initial leveling, these angles can be considered zero; however, the application of the earth's rate torquing signals with an error of $\Delta \phi_z$ causes a tilt which can be computed from

$$\Delta \phi_y = \int_o^t E_y \, dt = \int_o^t \Omega_{y_n} \cdot \sin \phi_z \cdot \Delta \phi_z \, dt \qquad 2\text{-}17$$

$$\Delta \phi_x(t) = \int_c^t E_x \, dt = -\int_o^t \Omega_{y_n} \cdot \cos \phi_z \cdot \Delta \phi_z dt \qquad 2\text{-}18$$

These tilts will cause the level axes' accelerometers to sense gravity components. The values of these gravity components will be

$$A_y = g \cdot \sin \Delta \phi_x \qquad 2\text{-}19$$

$$A_x = -g \cdot \sin \Delta \phi_y \qquad 2\text{-}20$$

where A_y and A_x are the platform level axes' accelerometer measurements. The minus sign in 2-20 results from assuming a right-handed convention for the platform axes and a gravity vector (g) in the positive vertical direction. Therefore, a positive error torque to the platform X_p gyro will cause the Y gyro axis to lift. A positive g component will then be sensed by the Y_p accelerometer. Similarly, a positive error torque to the Y_p gyro will cause the X_p gyro to dip, thereby causing a negative g component to be

sensed by the X_p accelerometer. For small t (say 1 to 5 minutes) at mid-latitudes the values of $\Delta \phi_x$ and $\Delta \phi_y$ will be on the order of 1 minute of arc. At these small values sin $\Delta \phi_x$ and sin $\Delta \phi_y$ can be replaced by $\Delta \phi_x$ and $\Delta \phi_y$, respectively, with negligible loss of accuracy. Therefore, 2-19 and 2-20 can be rewritten as

$$A_y = g \cdot \Delta \phi_x \qquad 2\text{-}21$$

$$A_x = -g \cdot \Delta \phi_y \qquad 2\text{-}22$$

During the process of establishing the initial azimuth wander angle of a stationary system, accelerometer output measurements occur only as a result of the system errors and measurement noise. Therefore, the accelerometer outputs A_y and A_x are a measure of the system errors. Figure 2-3 is a block diagram illustrating equations 2-17, 18, 21, 22. This figure is a system error model without the effects of cross-coupling considered.

Cross-coupling effects between the level axes and between the level and vertical axes occur due to platform tilt. The level axes cross-coupling is caused by the level gyros sensing a component of the vertical earth's rate. This sensing is viewed from the navigation frame. For example, a small value of $\Delta \phi_x$ causes the Y_p gyro to lift. This causes the gyro to sense a component of vertical earth's rate of magnitude $\Omega z_n \sin \Delta \phi_x$. In the navigation frame the precession about the Y_p gyro sensitive axis will be in the direction of a left handed screw. This cross-coupling term will therefore have a negative sign. For a small value of $\Delta \phi_y$ the cross-coupling to the X_p gyro is $\Omega z_n \cdot \sin \Delta \phi_y$.

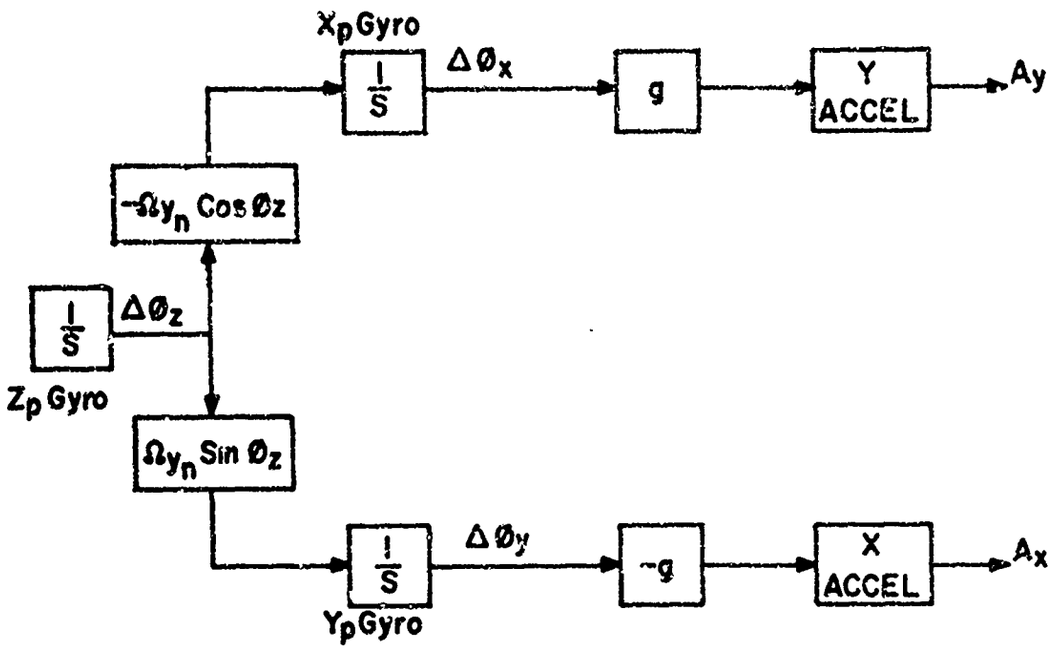

Figure 2-3. Block Diagram of System Error Model without Cross-Coupling Effects.

Since $\Delta \phi_x$ and $\Delta \phi_y$ will always be of small value, a small angle approximation can be used in lieu of sin $\Delta \phi_x$ and sin $\Delta \phi_y$. The level axes cross-coupling is therefore

$$E_{y_{cc}} = - \Omega_{z_n} \cdot \Delta \phi_x \qquad 2\text{-}23$$

$$E_{x_{cc}} = \Omega_{z_n} \cdot \Delta \phi_y \qquad 2\text{-}24$$

where $E_{y_{cc}}$ represents the rate error to the Y gyro due to cross-coupling and $E_{x_{cc}}$ represents the X_p gyro cross-coupling rate error. Taking into account these level axes cross-coupling terms, equations 2-17 and 2-18 can be modified to

$$\Delta \phi_y(t) = \int_0^t \left[\Omega_{y_n} \cdot \sin \phi_z \cdot \Delta \phi_z - \Omega_{z_n} \cdot \Delta \phi_x \right] dt \qquad 2\text{-}25$$

$$\Delta \phi_x(t) = \int_0^t \left[\Omega_{z_n} \cdot \Delta \phi_y - \Omega_{y_n} \cos \phi_z \cdot \Delta \phi_z \right] dt \qquad 2\text{-}26$$

The remaining significant cross-coupling errors occur as a result of the azimuth gyro sensing the horizontal component of earth's rate, as viewed in the navigation frame. If the azimuth wander angle were zero, that is, the Y_p gyro pointing north in the navigation frame, a small tilt about the X_p gyro, $\Delta \phi_x$, would cause the azimuth gyro to sense a component of level earth's rate in the amount $\Omega_{y_n} \cdot \sin \Delta \phi_x$. For an arbitrary azimuth wander angle, the error rate to the azimuth gyro due to level axes tilt can be expressed as

$$E_{z_{cc}} = \Omega_{y_n} (\cos \phi_z \cdot \sin \Delta \phi_x - \sin \phi_z \cdot \sin \Delta \phi_y) \qquad 2\text{-}27$$

Using the small angle approximation 2-27 can be written

$$E_{z_{cc}} = \Omega_{y_n} (\cos \phi_z \cdot \Delta \phi_x - \sin \phi_z \cdot \Delta \phi_y) \qquad 2\text{-}28$$

Taking into account this azimuth gyro error rate, the azimuth wander angle error, $\Delta \phi_z$, as a function of time is

$$\Delta \phi_z(t) = \int_0^t \Omega_{y_n} (\cos \phi_z \cdot \Delta \phi_z - \sin \phi_z \cdot \Delta \phi_y)\, dt + \Delta \phi_z(0) \qquad 2\text{-}29$$

Equations 2-25, 26, 29 are used to construct a system error block diagram which includes cross-coupling. This block diagram is illustrated in figure 2-4.

To complete the system error model the effects of inertial component drifts and measurement noise must be considered. Both the inertial component drifts and the measurement noise can be described as random processes.[2]

The simplest model for random gyro drift rate assumes the drift to be a random constant. For most applications a model such as this is not adequate, since, from empirically obtained

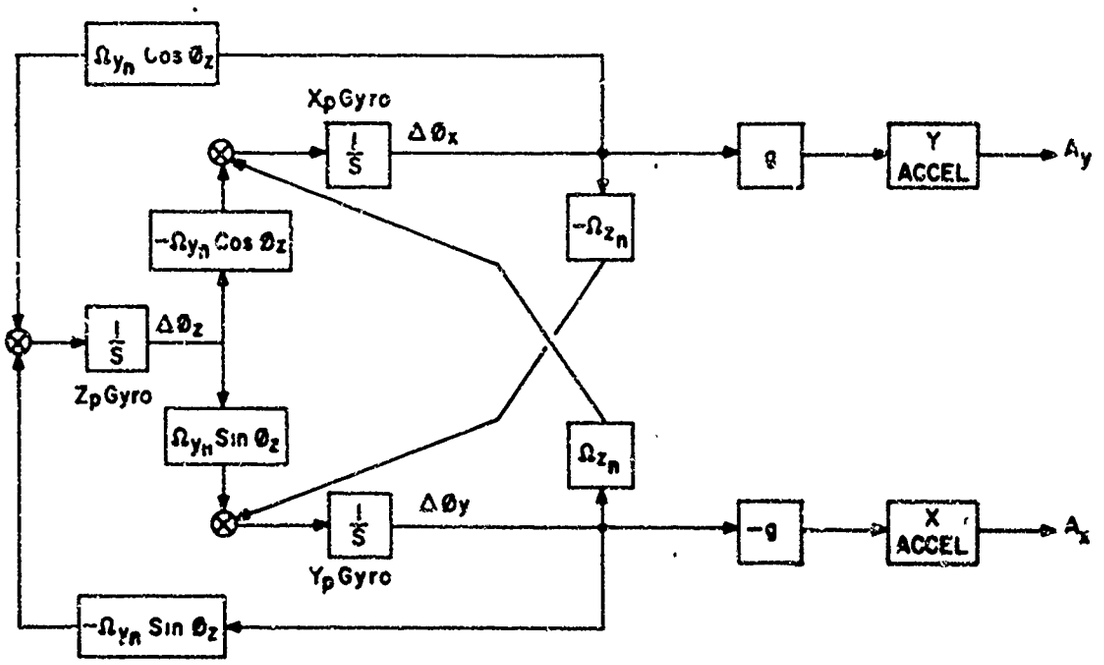

Figure 2-4. Block Diagram of System Error Model with Cross-Coupling Effects.

gyro drift runs, auto-correlation functions of the exponential form have been obtained.[3]

If Gaussian white noise[4] is passed through a linear first order shaping filter, as illustrated in figure 2-5, the output will be characterized by an autocorrelation function of the exponential form. In the figure U represents zero mean Gaussian white noise and ϵ is the exponentially correlated gyro drift rate. The relationship between the output autocorrelation function, $\varphi_{\epsilon\epsilon}(\tau)$, and the input autocorrelation function, $\varphi_{uu}(\tau)$, can

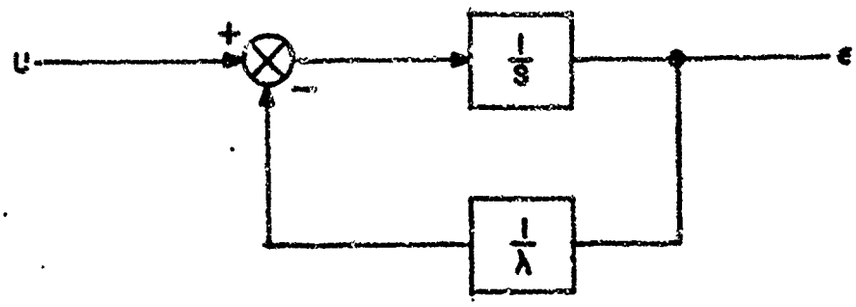

Figure 2-5. Shaping Filter.

be established using the following relationship in the frequency domain[8]

$$\Phi_{\epsilon\epsilon}(\omega) = \overline{H}(\omega)\, H(\omega)\, \Phi_{uu}(\omega) \qquad 2\text{-}30$$

where $\Phi_{uu}(\omega)$ and $\Phi_{\epsilon\epsilon}(\omega)$ are the Fourier transforms of the input and output autocorrelation functions. $\Phi_{uu}(\omega)$ and $\Phi_{\epsilon\epsilon}(\omega)$ are frequently referred to as the input and output power density spectrums. The term $H(\omega)$ is the transform of the filter impulse response or filter transfer function, and the bar over H denotes the conjugate. The transfer function for the first order shaping filter is

$$H(\omega) = \frac{1}{j\omega + 1/\lambda} \qquad 2\text{-}31$$

and the input autocorrelation function for Gaussian white noise is

$$\phi_{uu}(\tau) = \sigma_u^2\, \delta(\tau) \qquad 2\text{-}32$$

where σ_u^2 is the variance of the white noise and $\delta(\tau)$ is the Dirac delta function. The input power density spectrum is

$$\Phi_{uu}(\omega) = \int_{-\infty}^{\infty} \sigma_u^2\, \delta(\tau)\, e^{-j\omega\tau}\, d\tau = \sigma_u^2 \qquad 2\text{-}33$$

which represents a constant power spectral density. Using equation 2-30, the output power density spectrum can be written as

$$\Phi_{\epsilon\epsilon}(\omega) = \left(\frac{1}{-j\omega + 1/\lambda}\right)\left(\frac{1}{j\omega + 1/\lambda}\right)\sigma_u^2 \qquad 2\text{-}34$$

or in the time domain

$$\phi_{\epsilon\epsilon}(\tau) = \frac{1}{2\pi}\int_{-\infty}^{\infty}\left(\frac{-1}{j\omega - 1/\lambda}\right)\left(\frac{1}{j\omega + 1/\lambda}\right)\sigma_u^2 e^{j\omega\tau}\, d\omega \qquad 2\text{-}35$$

Evaluating the above integral[6] yields

$$\phi_{\epsilon\epsilon}(\tau) = \frac{\lambda}{2}\,\sigma_u^2 e^{-\tau/\lambda} \qquad \tau > 0 \qquad 2\text{-}36$$

or

$$\phi_{\epsilon\epsilon}(\tau) = \frac{\lambda}{2}\,\sigma_u^2 e^{-|\tau|/\lambda} \qquad 2\text{-}37$$

where τ is the difference between two points in time, i.e. $(t_1 - t_2)$.

The variance of the output random process is

$$\phi_{\epsilon\epsilon}(0) = \sigma_\epsilon^2 = \frac{\lambda}{2}\,\sigma_u^2 \qquad 2\text{-}38$$

From empirical data the standard error, σ_ϵ, for an exponentially correlated random drift can be determined. In addition, if an autocorrelation function is plotted, the time interval for the function to decrease from σ_ϵ^2 to a value of σ_ϵ^2/e can also be determined. This quantity, designated λ, is sometimes referred to as the correlation time.[7]

If ϵ_y, ϵ_x, and ϵ_z are used to represent the various random gyro drift rates, the platform tilt angles and error in the azimuth wander angle due to these random drifts ($\Delta\phi\epsilon_y$, $\Delta\phi\epsilon_x$, and $\Delta\phi\epsilon_z$) can be computed from

$$\Delta\phi_{\epsilon_y}(t) = \int_0^t \epsilon_y\, dt \qquad 2\text{-}39$$

$$\Delta\phi_{\epsilon_x}(t) = \int_0^t \epsilon_x\, dt \qquad 2\text{-}40$$

$$\Delta\phi_{\epsilon_z}(t) = \int_0^t \epsilon_z\, dt \qquad 2\text{-}41$$

By combining these three equations with 2-25, 26, and 29 total expressions for $\Delta\phi_y$, $\Delta\phi_x$ and $\Delta\phi_z$ can be written as

$$\Delta\phi_y(t) = \int_0^t \left[\Omega_{y_n} \cdot \sin\phi_z \cdot \Delta\phi_z - \Omega_{z_n} \cdot \Delta\phi_x + \epsilon_y \right] dt \qquad 2\text{-}42$$

$$\Delta\phi_x(t) = \int_0^t \left[\Omega_{z_n} \cdot \Delta\phi_y - \Omega_{y_n} \cos\phi_z \cdot \Delta\phi_z + \epsilon_x \right] dt \qquad 2\text{-}43$$

$$\Delta\phi_z(t) = \int_0^t \left[\Omega_{y_n} (\cos\phi_z \cdot \Delta\phi_x - \sin\phi_z \cdot \Delta\phi_y) + \epsilon_z \right] dt + \Delta\phi_z(0) \qquad 2\text{-}44$$

The accelerometers' outputs due to random drift effects can be represented, as in the case of the gyros' random drift rates, by linear first order shaping filters driven by Gaussian white noise. These accelerometer drifts will be represented by α_x and α_y, for the X_p and Y_p accelerometers respectively. Empirically derived values for the standard error, σ_α, and for the so-called correlation time, λ, can then be used in equation 2-38 to find the variance of the input white noise.

Random disturbances measured by the accelerometers (such as vibrations, wind gusts, etc.) and accelerometer outputs due to circuit noise (e.g., amplifier noise in a force rebalance loop) can be approximated by additive white noise to the accelerometers' outputs. The actual spectral density of this noise will be a function of the environment of the inertial platform, however, for convenience an additive white noise disturbance will be assumed. This noise will be denoted by V_x and V_y for the X_p and Y_p accelerometers respectively.

Including the effects of the accelerometer's random drifts and the additive noise, equations 2-21 and 2-22 can be rewritten as

$$A_y = g \cdot \Delta \phi_x + \alpha_y + V_y \qquad 2\text{-}45$$

$$A_x = -g \cdot \Delta \phi_y + \alpha_x + V_x \qquad 2\text{-}46$$

A complete system error model can now be constructed from equations 2-42 through 2-46. A block diagram of this model is illustrated in figure 2-5.

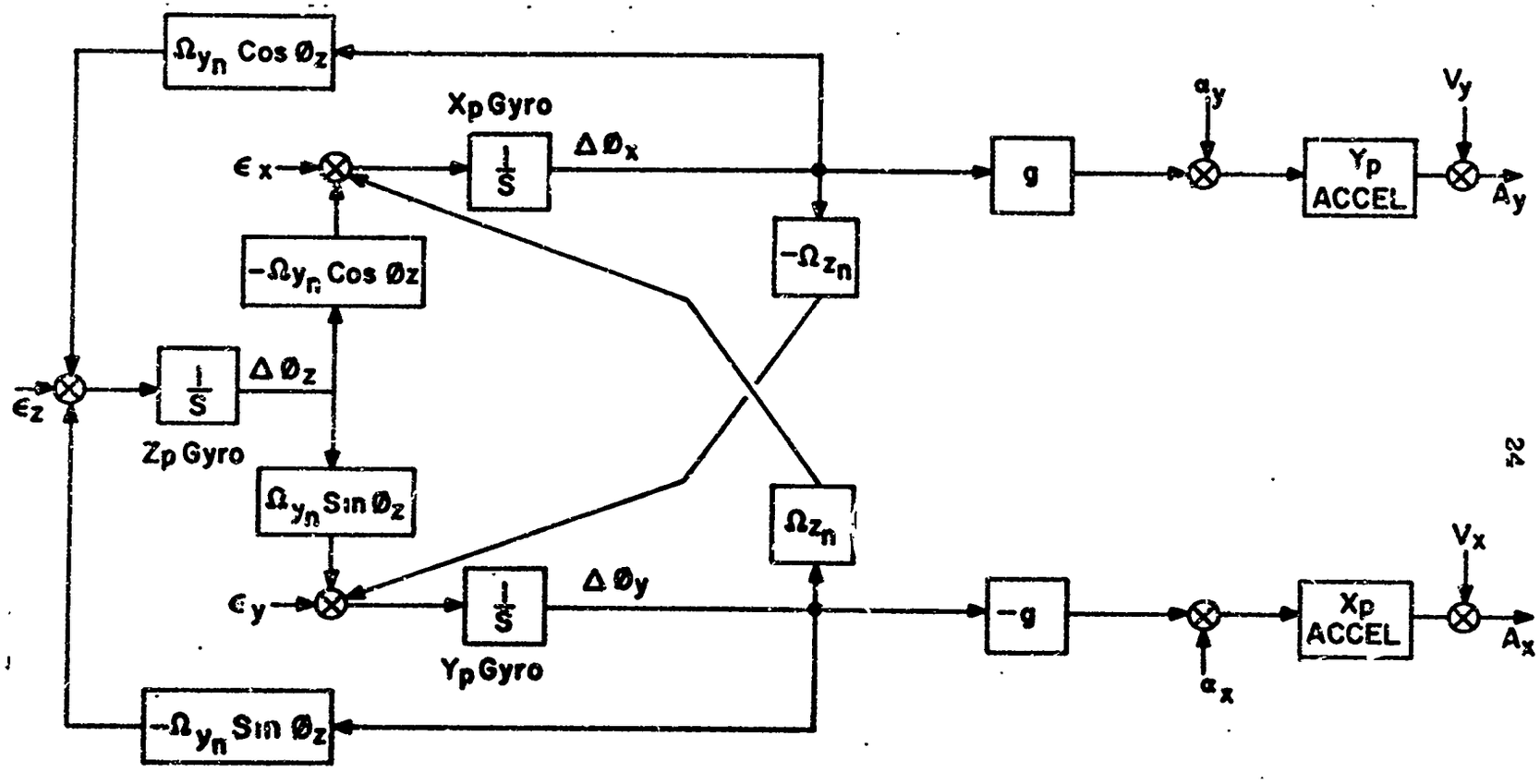

Figure 2-6. System Error Model.

References Cited in II. The System Error Model

[1] Cannon, R.H. Jr, "Alignment of Inertial Systems by Gyrocompassing-Linear Theory", Journal of the Aerospace Sciences, Vol. 28, Nov. 1961. Page 885-886.

[2] Broxmeyer, C. Inertial Navigation Systems, McGraw-Hill Book Company, 1964. Appendix D. Page 66.

[3] Dushman, A., "On Gyro Drift Models and Their Evaluation", IRE Transactions on Aerospace and Navigational Electronics, ANE-9, pages 230-234, 1962. Figure 1, page 233.

[4] Lanning, J.H. Jr., Battin, R.H., Random Processes in Automatic Control, McGraw-Hill Book Company, 1956. Pages 142-144. Chapter 4.

[5] Lee, Y.W., Statistical Theory of Communication, John Wiley and Sons, Inc., 1964. Pages 331-336.

[6] Newton, G.C. Jr., Gould, L.A., Kaiser, J.F., Analytical Design of Linear Feedback Controls, John Wiley and Sons, Inc., 1964. A.5

[7] Jurenka, F.D., Leondes, C.T., "Optimum Alignment of an Inertial Autonavigator", IEEE Transactions on Aerospace and Electronic Systems, Vol. AES-3, No. 6 Nov 1967. Page 882.

III. Formulation of State Space Equations

The system error model illustrated in figure 2-6 is a multiple input-multiple output linear system. In recent years matrix equations have been applied extensively in the analysis and synthesis of multivariable systems.[1,2] In this chapter the system error model developed in chapter II will be described by two matrix equations. These equations are

$$\dot{\underline{X}} = A\underline{X} + \underline{U} \qquad 3\text{-}1$$

$$\underline{Y} = M\underline{X} + \underline{V} \qquad 3\text{-}2$$

In equation 3-1, A is the system dynamics matrix, $\underline{X}$ is the error state vector (bar under letter denotes vector), and $\underline{U}$ is the input forcing function. A dot over the vector indicates differentiation of the vector with respect to time. In equation 3-2, $\underline{Y}$ is the measurement vector, M is the measurement matrix, and $\underline{V}$ is the additive measurement noise. Equation 3-1 is frequently referred to as the system dynamics equation and equation 3-2 as the system measurement equation.

Equations 2-42 through 2-44 describe the dynamics of the system error model. Differentiating these equations with respect to time yields the following first order differential equations

$$\Delta\dot{\phi}_y = \Omega_{y_n} \cdot \sin\phi_z \cdot \Delta\phi_z - \Omega_{z_n} \cdot \Delta\phi_x + \epsilon_y \qquad 3\text{-}3$$

$$\Delta\dot{\phi}_x = \Omega_{z_n} \cdot \Delta\phi_y - \Omega_{y_n} \cdot \cos\phi_z \cdot \Delta\phi_z + \epsilon_x \qquad 3\text{-}4$$

$$\Delta\dot{\phi}_z = \Omega_{y_n} (\cos\phi_z \cdot \Delta\phi_x - \sin\phi_z \cdot \Delta\phi_y) + \epsilon_z \qquad 3\text{-}5$$

For the moment, letting the state vector $\underline{X}$ be composed of the elements $\Delta\phi_y$, $\Delta\phi_x$, and $\Delta\phi_z$; then equations 3-3, 4, and 5 can be combined to form the following first order matrix differential

equation

$$\begin{bmatrix} \Delta \dot{\phi}_y \\ \Delta \dot{\phi}_x \\ \Delta \dot{\phi}_z \end{bmatrix} = \begin{bmatrix} 0 & -\Omega_{z_n} & \Omega_{y_n} \cdot \sin \phi_z \\ \Omega_{z_n} & 0 & -\Omega_{y_n} \cdot \cos \phi_z \\ -\Omega_{y_n} \cdot \sin \phi_z & \Omega_{y_n} \cdot \cos \phi_z & 0 \end{bmatrix} \begin{bmatrix} \Delta \phi_y \\ \Delta \phi_x \\ \Delta \phi_z \end{bmatrix} + \begin{bmatrix} \epsilon_y \\ \epsilon_x \\ \epsilon_z \end{bmatrix} \qquad 3\text{-}6$$

The forcing function vector in equation 3-6 is composed of the various gyro random drifts. In chapter II these drifts were modeled by a first order linear filter excited by zero mean Gaussian white noise (see figure 2-5). Therefore, first order differential equations describing the dynamical behavior of ϵ_y, ϵ_x, and ϵ_z are

$$\dot{\epsilon}_y = -1/\lambda_y \, \epsilon_y + U_y \qquad 3\text{-}7$$

$$\dot{\epsilon}_x = -1/\lambda_x \, \epsilon_x + U_x \qquad 3\text{-}8$$

$$\dot{\epsilon}_z = -1/\lambda_z \, \epsilon_z + U_z \qquad 3\text{-}9$$

where the y, x, and z subscripts are used to identify the λ and U associated with each gyro random drift. Equations 3-7, 8, and 9 can be combined to form the matrix differential equation

$$\begin{bmatrix} \dot{\epsilon}_y \\ \dot{\epsilon}_x \\ \dot{\epsilon}_z \end{bmatrix} = \begin{bmatrix} -1/\lambda_y & 0 & 0 \\ 0 & -1/\lambda_x & 0 \\ 0 & 0 & -1/\lambda_z \end{bmatrix} \begin{bmatrix} \epsilon_y \\ \epsilon_x \\ \epsilon_z \end{bmatrix} + \begin{bmatrix} U_y \\ U_x \\ U_z \end{bmatrix} \qquad 3\text{-}10$$

Similarly, the random drift of the accelerometers can be described by

$$\dot{\alpha}_y = -1/\mu_y \, \alpha_y + W_y \qquad 3\text{-}11$$

$$\dot{\alpha}_x = -1/\mu_x \, \alpha_x + W_x \qquad 3\text{-}12$$

where μ is analogous to the λ in the gyro drift model and W is

analogous to U. In matrix form the dynamics of the random drift of the accelerometers can be written as

$$\begin{bmatrix} \dot{\alpha}_y \\ \dot{\alpha}_x \end{bmatrix} = \begin{bmatrix} -1/\mu_y & 0 \\ 0 & -1/\mu_x \end{bmatrix} \begin{bmatrix} \alpha_y \\ \alpha_x \end{bmatrix} + \begin{bmatrix} W_y \\ W_x \end{bmatrix} \qquad 3\text{-}13$$

The dynamics of the system error model (inclusive of the inertial drift models) are described by equations 3-6, 3-10, and 3-13. If the system error state vector is defined as

$$\underline{X} = \begin{bmatrix} \Delta \phi_y \\ \Delta \phi_x \\ \Delta \phi_z \\ \epsilon_y \\ \epsilon_x \\ \epsilon_z \\ \alpha_y \\ \alpha_x \end{bmatrix} \qquad 3\text{-}14$$

then an equation in the form of equation 3-1 can be formulated for the total system error model. This first order matrix differential equation is

$$
\begin{bmatrix} \Delta\dot{\phi}_y \\ \Delta\dot{\phi}_x \\ \Delta\dot{\phi}_z \\ \hline \dot{\epsilon}_y \\ \dot{\epsilon}_x \\ \dot{\epsilon}_z \\ \hline \dot{\alpha}_y \\ \dot{\alpha}_x \end{bmatrix}
=
\left[\begin{array}{ccc|ccc|cc}
0 & -\Omega z_n & \Omega y_n \cdot \sin\phi_z & 1 & 0 & 0 & & \\
\Omega z_n & 0 & -\Omega y_n \cdot \cos\phi_z & 0 & 1 & 0 & & 0 \\
-\Omega y_n \cdot \sin\phi_z & \Omega y_n \cdot \cos\phi_z & 0 & 0 & 0 & 1 & & \\
\hline
 & & & -1/\lambda_y & 0 & 0 & & \\
 & 0 & & 0 & -1/\lambda_x & 0 & & 0 \\
 & & & 0 & 0 & -1/\lambda_z & & \\
\hline
 & & & & & & -1/\mu_y & 0 \\
 & 0 & & & 0 & & 0 & -1/\mu_x
\end{array}\right]
\begin{bmatrix} \Delta\phi_y \\ \Delta\phi_x \\ \Delta\phi_z \\ \hline \epsilon_y \\ \epsilon_x \\ \epsilon_z \\ \hline \alpha_y \\ \alpha_x \end{bmatrix}
+
\begin{bmatrix} 0 \\ 0 \\ 0 \\ \hline U_y \\ U_x \\ U_z \\ \hline W_y \\ W_x \end{bmatrix}
\qquad 3\text{-}15
$$

The accelerometer measurements due to system errors are (from chapter .)

$$A_y = g \cdot \Delta \phi_x + \alpha_y + V_y \qquad 3\text{-}16$$

$$A_x = -g \cdot \Delta \phi_y + \alpha_x + V_x \qquad 3\text{-}17$$

If the measurement vector is now defined as

$$\underline{Y} = \begin{bmatrix} A_y \\ A_x \end{bmatrix} \qquad 3\text{-}18$$

the measurement equation can be written in the form of equation 3-2 as

$$\begin{bmatrix} A_y \\ A_x \end{bmatrix} = \begin{bmatrix} 0 & g & 0 & 0 & 0 & 0 & 1 & 0 \\ -g & 0 & 0 & 0 & 0 & 0 & 0 & 1 \end{bmatrix} \begin{bmatrix} \Delta \phi_y \\ \Delta \phi_x \\ \Delta \phi_z \\ \epsilon_y \\ \epsilon_x \\ \epsilon_z \\ \alpha_y \\ \alpha_x \end{bmatrix} + \begin{bmatrix} V_y \\ V_x \end{bmatrix} \qquad 3\text{-}19$$

Equations 3-15 and 3-19 are the state space equations for the error model illustrated in figure 2-6. Examining the state space dynamical equation (3-15) reveals that the A matrix, sometimes referred to as the system's dynamics matrix, contains elements which are functions of ϕ_z, the unknown azimuth wander angle. Therefore, the angle to be determined is a parameter of the system. Problems of this nature are frequently referred to as parameter estimation problems.

References Cited in III. Formulation of State Space Equations

[1] Derusso, P.M., Roy, R.J., Close, C.M., State Variables for Engineers, John Wiley and Sons, Inc., 1966. Chapter 5.

[2] Ogata, K.; State Space Analysis of Control Systems, Prentice-Hall, Inc., 1967. Chapter 1, 4.

IV. Parameter Estimation

The system error model has been described (in chapter III) by the following matrix equations

$$\dot{\underline{X}} = A(\phi_z)\,\underline{X} + \underline{U} \qquad 4\text{-}1$$

$$\underline{Y} = M\,\underline{X} + \underline{V} \qquad 4\text{-}2$$

where

$\underline{X}$ is an 8x1 state vector of the system errors,

$\underline{U}$ is an 8x1 Gaussian white noise vector that is the input to the system error model,

$\underline{Y}$ is a 2x1 vector that contains the outputs or measurements of the system error model,

$A(\phi_z)$ is an 8x8 matrix representing the dynamics of the system and containing elements which are functions of ϕ_z, the azimuth wander angle,

M is a 2x8 matrix which linearly relates $\underline{X}$ to $\underline{Y}$ (usually referred to as the measurement matrix), and

$\underline{V}$ is a 2x1 Gaussian white noise vector representing the additive noise on the measurement.

A matrix block diagram of the system error model is presented in figure 4-1. The wide lines indicate vector-signal flow, and the transfer function 1/S represents 8 integrators arranged so the output of each is a state variable. The dynamics matrix $A(\phi_z)$ indicates how the outputs of the integrators are fed back to the inputs of the integrators. For example, the A_{ij} element represents the transfer function between the output of the jth integrator and the input to the ith integrator.

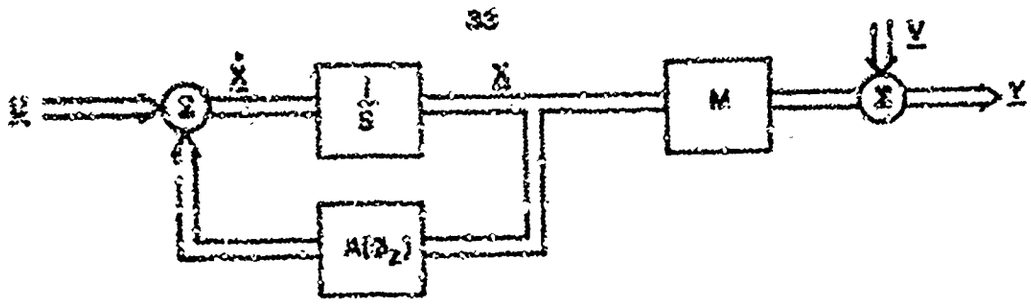

Figure 4-1. Matrix Block Diagram of System Error Model.

The goal of this investigation is to formulate a technique to determine the azimuth wander angle, ϕ_z, in minimum time. In addition, if the gyro drifts ($\epsilon_x, \epsilon_y, \epsilon_z$) and the accelerometer drifts (α_x, α_y) can be estimated, then suitable compensation can be implemented in the platform controller. Therefore, estimates of the state of the system errors, $\underline{X}$, and an unknown parameter, ϕ_z, are needed.

The method for estimating the state of a system developed by Kalman,[1] using the minimum variance criterion, can be applied to linear stochastic systems with Gaussian statistics where the values of the dynamical parameters are specified. In this investigation one of the parameters of the dynamic model is known imprecisely, and furthermore, precise knowledge of the parameter is necessary for establishing the initial conditions of the inertial platform.

One method for treating this type of problem is discussed by Sorenson.[2] Sorenson's approach considers the initial estimated value of the parameter as a known constant. A conventional Kalman filter is then synthesized where one element of the

estimated state vector is related to this parameter (or is the parameter). The parameter value is then updated in accordance with the state estimate. The Kalman filter provides an estimate of the parameter as well as the variance of the error in the estimate. When the variance reaches an a priori determined value the process can be terminated and a value for the parameter established. This parameter estimation procedure may converge to the true value of the parameter, however, the convergence may not be optimal in time. For the problem under consideration rapid convergence is of prime importance, therefore, a time optimal procedure must be utilized.

Magill[3,4] has treated the problem of time optimal parameter estimation where the parameter is constrained to a finite number of possible values. Elemental linear estimators (or Kalman filters) are constructed for each of the possible parameter values, and the outputs of these estimators weighted to form an optimal estimate of the state vector. Magill then shows that given the system outputs the optimal parameter estimate is the sum of the elemental parameters each weighted by a conditional probability. These conditional probabilities are calculated on a recursive basis until one converges to a value 1 while the rest converge to zero. Figure 4-2 illustrates Magill's time optimal estimator as it could be applied to this problem of rapid determination of the azimuth runder angle. The superscripts on the θ_z refer to the various values of the parameter, while the superscripts on $\underline{X}$ indicate the estimated state vector associated with a particular

parameter value.

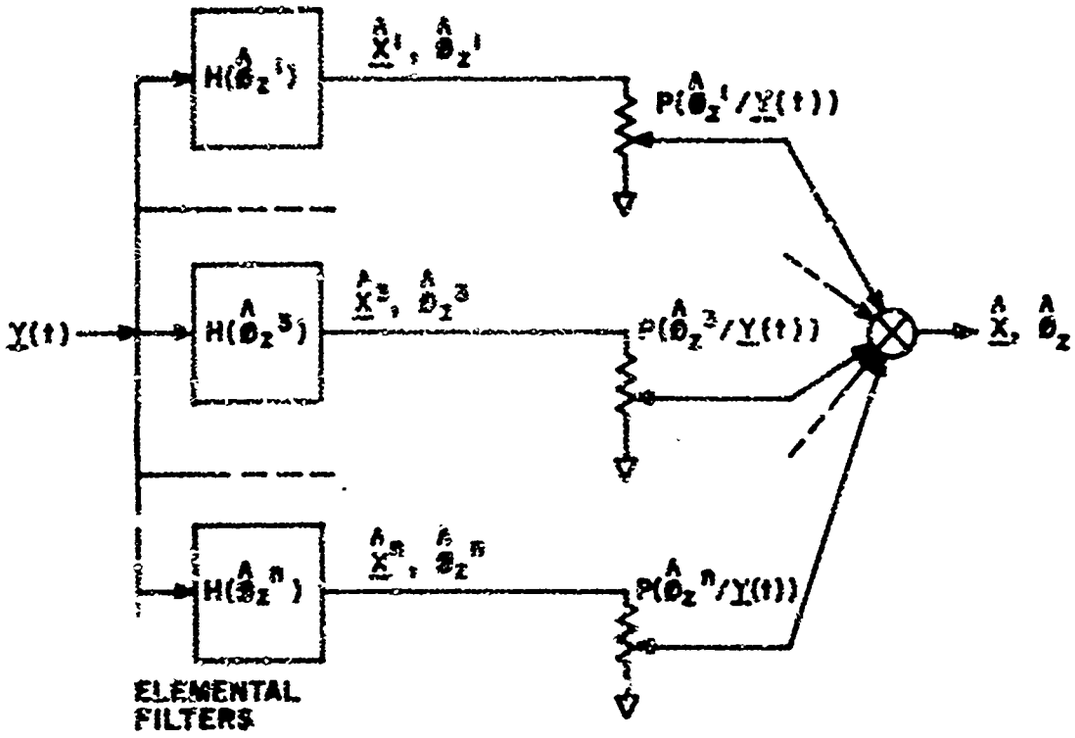

Figure 4-2. Time Optimal Parameter Estimation (Magill).

Magill's method is useful only if one of the ϕ_z^i ($i = 1, 2, .. n$) chosen for the elemental filters is the true value of the parameter. To practically realize this condition for the problem under consideration, where ϕ_z may assume a continuum of values between 0 and 2π, a large number of elemental filters would be required. For example, given an initial estimate of ϕ_z with a standard error of 1.5 degrees, it will be necessary to construct an elemental filter for every six minutes of arc in the range $\phi - 4.5^\circ$ to $\phi_z + 4.5^\circ$, assuming that the desired accuracy is of the order of 6 minutes of arc. Therefore, it can be seen that the application of Magill's parameter estimator to the problem at hand would

lead to computational difficulties, since about 90 elemental filters would be needed.

For the problem under consideration a time optimal parameter estimator which allows the parameter to assume any of a continuum of well defined values is needed. An estimator of this type can be synthesized by combining the method of Magill with Sorenson's approach. As in Magill's method, this parameter estimator will utilize a bank of elemental linear filters each initialized with a value for the parameter. However, instead of fixing the parameter value for each elemental filter, this value will be allowed to converge to the true parameter value by continuously updating ϕ_z^i based on $\hat{\underline{X}}(\phi_z^i)$, as in Sorenson's method. Therefore, the new method combines the time optimal feature inherent in Magill's approach, with the continuous value feature of Sorenson's method. A limited amount of filters can be used since the filters have the flexibility to change the parameter value.

The next step involves the determination of a weighting function for each of the elemental filters so an overall error state vector estimate and parameter estimate can be formed. As will be shown in chapter V, the measurement vector, $\underline{Y}$, is differenced with the expected measurement, $\hat{\underline{Y}}$, at the input of the elemental filter. This expected measurement is obtained simply by pre-multiplying the propagated error state vector by the measurement matrix. This vector difference will be denoted by $\tilde{\underline{Y}}$ and defined as

$$\tilde{\underline{Y}} = \underline{Y} - \hat{\underline{Y}} \qquad 4\text{-}3$$

Referring to the bank of elemental filters it is evident that the filters with parameter values close to the true value will generate expected measurement vectors, $\hat{\underline{Y}}$, closer in value to the actual measurement vector, $\underline{Y}$, than those whose parameter value is less accurate. Therefore, the outputs of the elemental filters where $\tilde{\underline{Y}}$ is relatively smaller should receive the greater weight. A simple method for generating weighting functions in accordance with the above criteria first requires the definition of the norm or length of $\tilde{\underline{Y}}$ as

$$\left\| \tilde{\underline{Y}} \right\| = (\tilde{\underline{Y}}, \tilde{\underline{Y}})^{1/2} = (\tilde{\underline{Y}}^T \tilde{\underline{Y}})^{1/2} \qquad 4\text{-}4$$

Next, an expression must be generated which weights the elemental filter outputs inversely proportional to the norm of the filter's $\tilde{\underline{Y}}$. In addition, the sum of all the weighting functions generated must equal 1. An expression which conforms to both of the above stipulations is

$$\omega(\phi_z^i) = \frac{1}{n-1} \frac{\sum_{j=1, j\neq i}^{n} \left\| \tilde{\underline{Y}}(\phi_z^j) \right\|}{\sum_{j=1}^{n} \left\| \tilde{\underline{Y}}(\phi_z^j) \right\|} \qquad 4\text{-}5$$

where $\omega(\phi_z^i)$ is the weighting function for the ith elemental filter and $\left\| \tilde{\underline{Y}}(\phi_z^j) \right\|$ is the norm of the difference between the expected measurement vector as generated by the jth elemental filter and the actual measurement vector.

As the various parameter values approach the true value ($\hat{\phi}_z^i \rightarrow \phi_z$; $i = 1, 2 \text{---} n$), the vectors $\tilde{\underline{Y}}(\phi_z^i)$ will all approach the same value. Inspection of equation 4-5 shows that under these

cricumstances the weighting functions will also all approach the same value resulting in a uniform distribution of the weighting functions.

Finally, a measure of the performance of the parameter estimator can be obtained from a weighted sum of the variance terms contained in each of the elemental filters. The same weighting functions generated by equation 4-5 will be used.

Figure 4-3 illustrates the continuous time optimal parameter estimator described in this chapter. The word continuous is used in the sense that the parameter can assume any of a continuum of values.

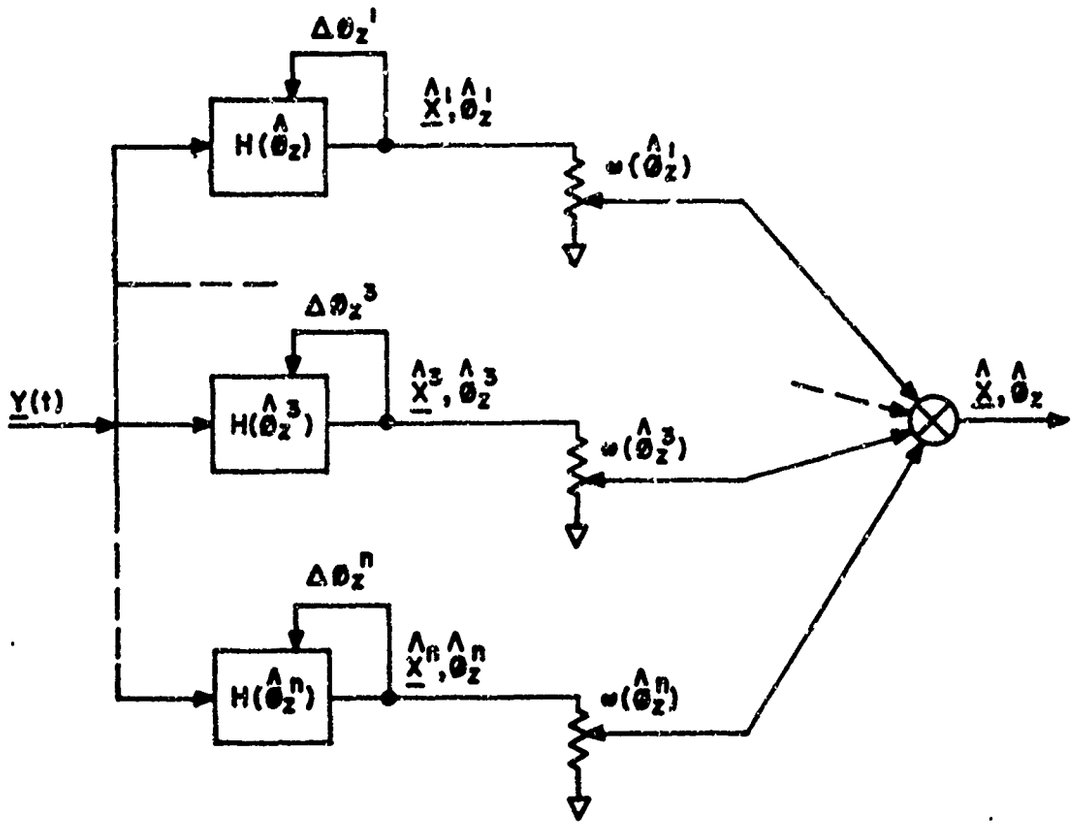

Figure 4-3. Continuous Time Optimal Parameter Estimator.

References Cited in IV. Parameter Estimation

[1] Kalman, R.E., "A New Approach to Linear Filtering and Prediction Problems", Journal of Basic Engineering, ASME Trans., Series D, 82 1960 PP 35-45.

[2] Sorenson, H.W., "Kalman Filtering Techniques", in Leondes, C.T., ed., Advances in Control Systems, vol. 3, New York, Academic Press, 1966, pp 219-292. Page 241.

[3] Magill, D.T., "Optimal Adaptive Estimation of Sampled Stochastic Processes", Tech. Rep. No. 6302-3 Stanford Electronics Laboratories, December 1963.

[4] Magill, D.T., "Optimal Adaptive Estimation of Sampled Stochastic Processes", IEEE Trans. on Automatic Control, Vol AC-10, No. 4, October 1965, PP 434-439.

V. The Elemental Filter

The elemental filter for the parameter estimation technique presented in the previous chapter can be synthesized quite readily using the methods of Kalman and Bucy.[1,2] The error model dynamics equation (equation 4-1) and the measurement equation (equation 4-2) are the basis for synthesizing an elemental filter for a specific $\emptyset_z$. The system error model is linear, continuous, and has a white noise forcing function. The measurement noise is also white and is additive. Due to the nature of the problem and airborne computer limitations the filter must necessarily be discrete performing error state estimates on a continuous system. The system measurements (that is, the accelerometer outputs) will be observed for a finite period (for example, 60 seconds) and then these measurements smoothed in some manner and fed to the elemental filters. The filters will then estimate the state vector, $\hat{\underline{X}}$. The various estimates of the state vector will then be weighted in accordance with equation 4-5 to form the overall estimate. The parameter estimate will then be formed by a weighted sum of the individual parameter values. The only difference between the ordinary Kalman filter form and the elemental filter used in this parameter estimator is feedback of a component of the output of the filter to the elemental filter dynamics matrix. Specifically, the filter estimate of the error in $\emptyset_z$ is used to update the value of $\emptyset_z$ in the system dynamics matrix of each filter.

The elemental filter has as its objective the generation of an estimate of the state vector, $\hat{\underline{X}}$, such that the mean square error

of the estimate is minimized.

A matrix, P, called the covariance matrix is defined as

$$P = E\left[(\underline{X} - \hat{\underline{X}})\cdot(\underline{X} - \hat{\underline{X}})^T\right] \qquad 5\text{-}1$$

where E is the expectation operator. The P matrix contains the second order statistics of the system errors. That is, the diagonal elements are the variances of the components of the estimation error and the off-diagonal elements are the covariances of the estimation errors taken two at a time. Therefore, the filter generates an $\hat{\underline{X}}$ which minimizes the variances on the diagonal of P.

The basic recursive equations for a discrete Kalman filter are adequately treated in many publications.[3] The following paragraphs present in summary form the equations which will be utilized to form the discrete elemental filter in the parameter estimator of this investigation.

The error model dynamics equation

$$\dot{\underline{X}} = A(\phi_z)\,\underline{X} + \underline{U} \qquad 5\text{-}2$$

has a solution which can be written as

$$\underline{X}(T) = \Phi(T,0)\,\underline{X}(0) + G(T) \qquad 5\text{-}3$$

where

$\Phi(T,0)$ = state transition matrix over the interval 0 to T[5,6]

$G(T)$ = the response of the system to the white noise vector, $\underline{U}$, over the interval 0 to T.

$\underline{X}(T)$ = state at time T

$\underline{X}(0)$ = state at time 0

If the elements of the white noise forcing function, $\underline{U}$, are uncorrelated, a diagonal matrix can be obtained from $E\left[\underline{U}\cdot\underline{U}^T\right]$. If this matrix is denoted by the letter Q an approximate expression for the covariance matrix, P, at time T is[4]

$$P(T) = \Phi(T,0)\cdot P(0)\cdot\Phi^T(T,0) + \frac{T}{2}\left[Q\cdot\Phi^T(T,0)+\Phi(T,0)\cdot Q\right] \qquad 5\text{-}4$$

where

$P(0)$ = covariance matrix at time 0

$P(T)$ = covariance matrix at time T

$\Phi^T(T,0)$ = transpose of the transition matrix

At this point it becomes necessary to distinguish between the best estimate of $\hat{\underline{X}}$ just prior to filtering, $\hat{\underline{X}}(T^-)$, and just after running the discrete filter $\hat{\underline{X}}(T^+)$. T^- will be used to indicate values just prior to running the filter and T^+ to indicate values just after the filter is run. This terminology will also apply to the covariance matrix, P.

At time 0 the filter is initialized with an estimate of the state vector $\hat{\underline{X}}(0)$ and a covariance matrix P(0). $\hat{\underline{X}}(0)$ and P(0) are then propagated to the Kalman update time T using

$$\hat{\underline{X}}(T^-) = \Phi(T,0)\cdot\hat{\underline{X}}(0) \qquad 5\text{-}5$$

for $\hat{\underline{X}}(T^-)$ and equation 5-4 for the computation of $P(T^-)$.

Now substituting $\hat{\underline{X}}(T^-)$ for $\underline{X}$ in the measurement equation (4-2) yields

$$\hat{\underline{Y}}(T) = M\,\hat{\underline{X}}(T^-) \qquad 5\text{-}6$$

where $\hat{\underline{Y}}(T)$ is referred to as the expected measurement. The measurement additive noise vector, $\underline{V}$, does not appear in 5-6 since the best estimate of white Gaussian noise is zero. The difference

between the expected measurement, $\hat{\underline{Y}}(T)$, and the actual measurement, $\underline{Y}(T)$, will be denoted by $\tilde{\underline{Y}}(T)$. That is,

$$\tilde{\underline{Y}}(T) = \underline{Y}(T) - \hat{\underline{Y}}(T) \qquad 5\text{-}7$$

A new estimate of the state vector can now be formed using the equation

$$\hat{\underline{X}}(T^{+}) = \hat{\underline{X}}(T^{-}) + K\tilde{\underline{Y}} \qquad 5\text{-}8$$

where K is the commonly referred to Kalman gain matrix. This K matrix is computed so as to minimize the diagonal or variance terms of the propagated covariance matrix. An equation which accomplishes this minimization is[7]

$$K = P(T^{-})\cdot M^{T}\left[M\cdot P(T^{-})\cdot M^{T} + R\right]^{-1} \qquad 5\text{-}9$$

where $R = E\left[\underline{V}\cdot\underline{V}^{T}\right]$

After the new state estimate is formed the covariance matrix is updated by[8]

$$P(T^{+}) = (I - KM)\cdot P(T^{-}) \qquad 5\text{-}10$$

Equations 5-5 through 5-10 contain the necessary recursive operations to construct a Kalman filter which operates at discrete times on a continuous system. To further generalize these equations replace 0 by t and T by $t + \Delta t$ where Δt is the time interval between filter runs. The number of filter iterations can be controlled by checking the variance terms of the P matrix. When a desired variance for an error state is reached the problem can be terminated.

For the parameter estimation technique presented in this investigation it is necessary that the value of ϕ_z (the azimuth wander angle) in the A matrix be updated by the estimate of $\Delta\ \phi_z$

after each filter run. This update is accomplished by summing the estimate of the error in ϕ_z (that is $\Delta \phi_z (t + \Delta t^+)$) with the current value of ϕ_z. Therefore, if $\phi_z (t + \Delta t^+)$ is used to denote the updated value of ϕ_z and $\phi_z (t + \Delta t^-)$ the value before updating

$$\phi_z (t + \Delta t^+) = \phi_z (t + \Delta t^-) + \Delta \phi_z (t + \Delta t^+) \quad 5\text{-}12$$

This updated value of the azimuth wander angle will then be used in the formation of a new A matrix for the elemental filter.

A block diagram of the elemental filter is presented in figure 5-1 and an equation flow chart for the filter algorithm presented in figure 5-2.

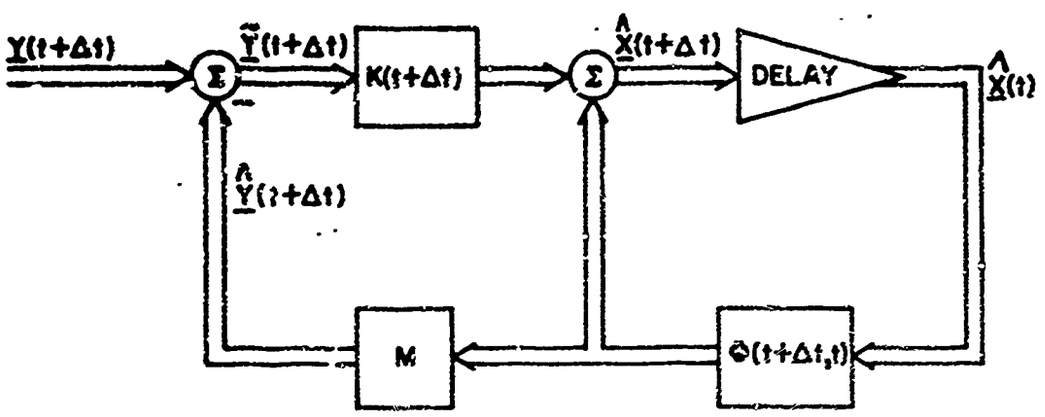

Figure 5-1. Block Diagram of Elemental Filter.

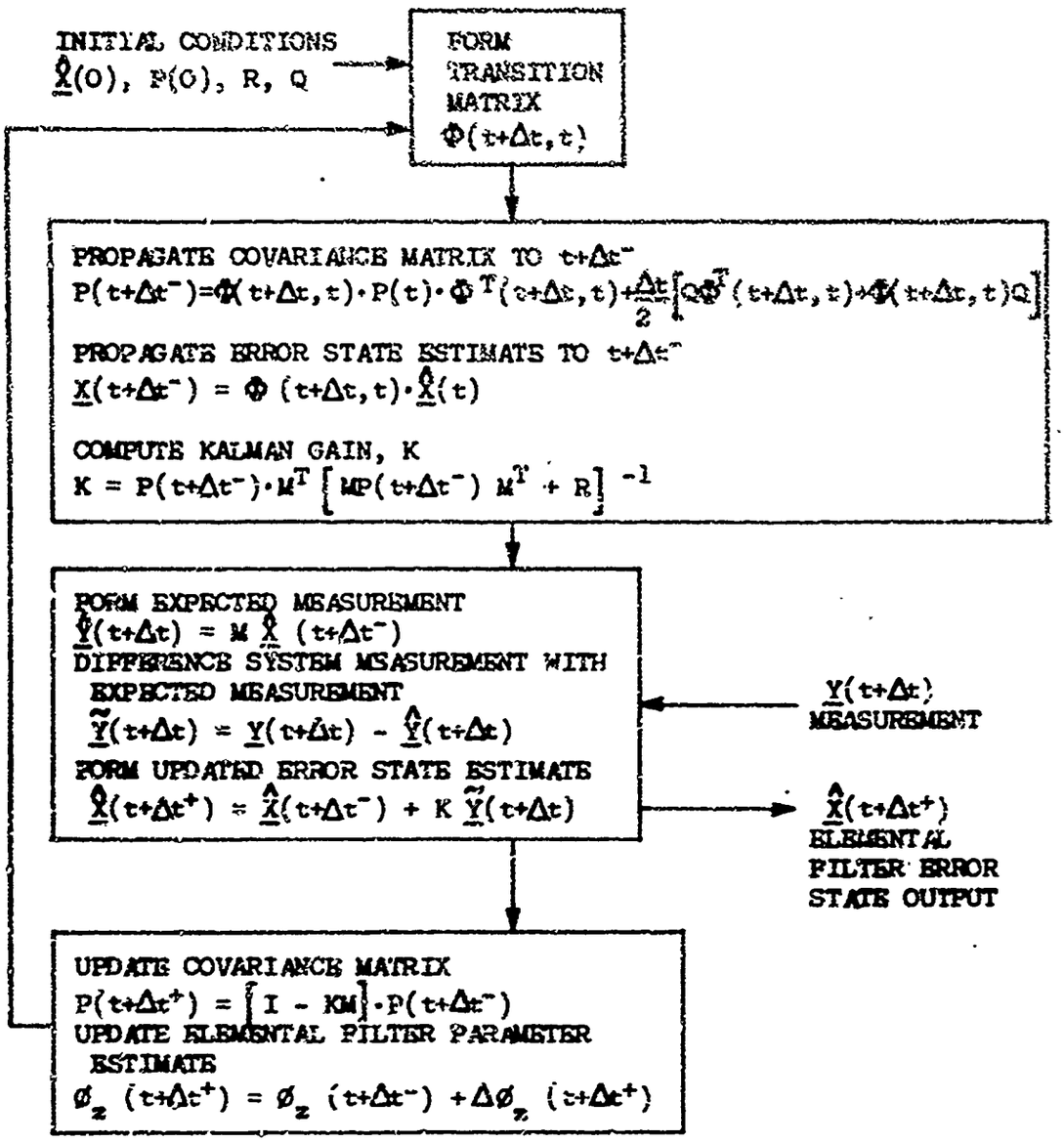

Figure 5-2. Elemental Filter Computer Algorithm.

References Cited in V. The Elemental Filter

[1] Kalman, R.E., "A New Approach to Linear Filtering and Prediction Problems", Journal of Basic Engineering, ASME TRANS., Series D, 82 1960 PP 35-45.

[2] Kalman, R.E., Bucy, R.S., "New Results in Linear Filtering and Prediction Theory", Trans. ASME, Journal of Basic Engineering, Vol. 83, PP 95-108 March 1961.

[3] Sorenson, H.W., "Kalman Filtering Techniques", in Leondes, C.T., ed., Advances in Control Systems, vol. 3, New York, Academic Press, 1966, 219-292.

[4] Knight, J.A., "The Development of a Kalman Filtering Algorithm for Hybrid Navigation Systems for Army Aircraft", to be presented at U.S. Army Science Conference, June 17 - 19, 1970 at U. S. Military Academy.

[5] Deruszo, F.M., Roy, R.J., Close, C.M., State Variables for Engineers, John Wiley and Sons, Inc., 1966. Chapter 5.

[6] Ogata, K., State Space Analysis of Control Systems, Prentice-Hall, Inc., 1967. Chapter 6.

[7] Sorenson, H.W., op, cit., Page 248, step (3).

[8] Sorenson, H.W., op, cit., Page 248, step (5).

VI. The System

The prime function of the platform controller during the initialization process is to apply earth rate torqueing signals to the platform gyros. The level axes torquing rates are computed using equation 2-5 with ϕ_z, the azimuth wander angle, replaced by its estimate, $\hat{\phi}_z$. The desired equilibrium condition is obtained when the correct azimuth wander angle is determined (within a specified accuracy) and the gyro and accelerometer random drifts compensated.

Using an external reference or from observation of the platform without earth rate torquing, the initial azimuth wander angle can be estimated with an accuracy of 1.5 degrees (1σ). A number of values are then selected in the vicinity of this initial estimate and an initial weighting distribution for these values assumed. The most intuitive approach to selection of these initial values is to assume a symmetrical distribution with symmetrical weighting. For example, if ϕ_z is the initial estimate, values of ϕ_z^i for the elemental filters could be ϕ_z, $\phi_z \pm 1^\circ$, $\phi_z \pm 2^\circ$, etc., and an initial triangular weighting centered on ϕ_z. The initial or a priori weighting distribution is utilized only for the first run of the parameter estimator. Subsequent runs use the weighting factors given by equation 4-5.

The error state vector, $\hat{\underline{X}}$, for each of the elemental filters is initialized with all elements equal to zero. The covariance matrix for each of the elemental filters is initialized with estimated variances for each error along the diagonal and all

off-diagonal terms zero. After the first run of the parameter estimator each of the elemental filters contains an estimate of the parameter, ϕ_z, estimates of the angle misalignments ($\Delta\phi_x$, $\Delta\phi_y$, $\Delta\phi_z$), estimates of the inertial component drifts (ϵ_x, ϵ_y, ϵ_z, α_x, α_y), and an updated covariance matrix. A new elemental filter parameter estimate is formed using equation 5-12. An overall parameter estimate can then be formed using the a priori weighting factors in accordance with

$$\hat{\phi}_z = \sum_{i=1}^{n} \omega(\hat{\phi}_z^i) \cdot \hat{\phi}_z^i \qquad 6\text{-}1$$

where n is the number of elemental filters. This value of $\hat{\phi}_z$ is then used in the computation of the earth rate torquing signals generated by the controller.

Compensation for the inertial components' drifts is accomplished by weighting and summing each of the elemental filter drift estimates, and then applying the results directly to the inertial components. The inertial components' drift corrections are then subtracted from the inertial component drift estimates in each of the elemental filters. This leaves a residual value in the fourth through eighth positions of the error state vector. This residual value will be propagated to the next update time in accordance with the propagation equation contained in the elemental filter algorithm. The $\Delta\phi_x$ and $\Delta\phi_y$ angle misalignments are torqued to zero by the leveling loops and the corresponding error states in each of the elemental filters set to zero. The $\Delta\phi_z$ term in each of the elemental filters is set equal to the

difference between the overall estimate of ϕ_z and the value of ϕ_z in the particular elemental filter.

On the second and subsequent parameter estimator runs weighting factors are computed in accordance with equation 4-5. These weighting factors are then used in the computation of the overall parameter estimate and the inertial components' compensation.

The primary result is to obtain a value for the azimuth wander angle within a specified statistical variance. A variance for the parameter estimator is formed by multiplying the weighting factor for each elemental filter by the variance of $\Delta \phi_z$ in the elemental filter covariance matrix. When this variance falls below a specified value the initialization procedure is terminated. The current value of ϕ_z is maintained in the controller earth rate computation and the current inertial components' compensation maintained. If in the navigation mode an augmented system with a Kalman filter is utilized, the azimuth wander angle and the inertial components' compensation will continue to be corrected during flight.

Figure 6-1 is a block diagram of the rapid initialization technique described in this investigation.

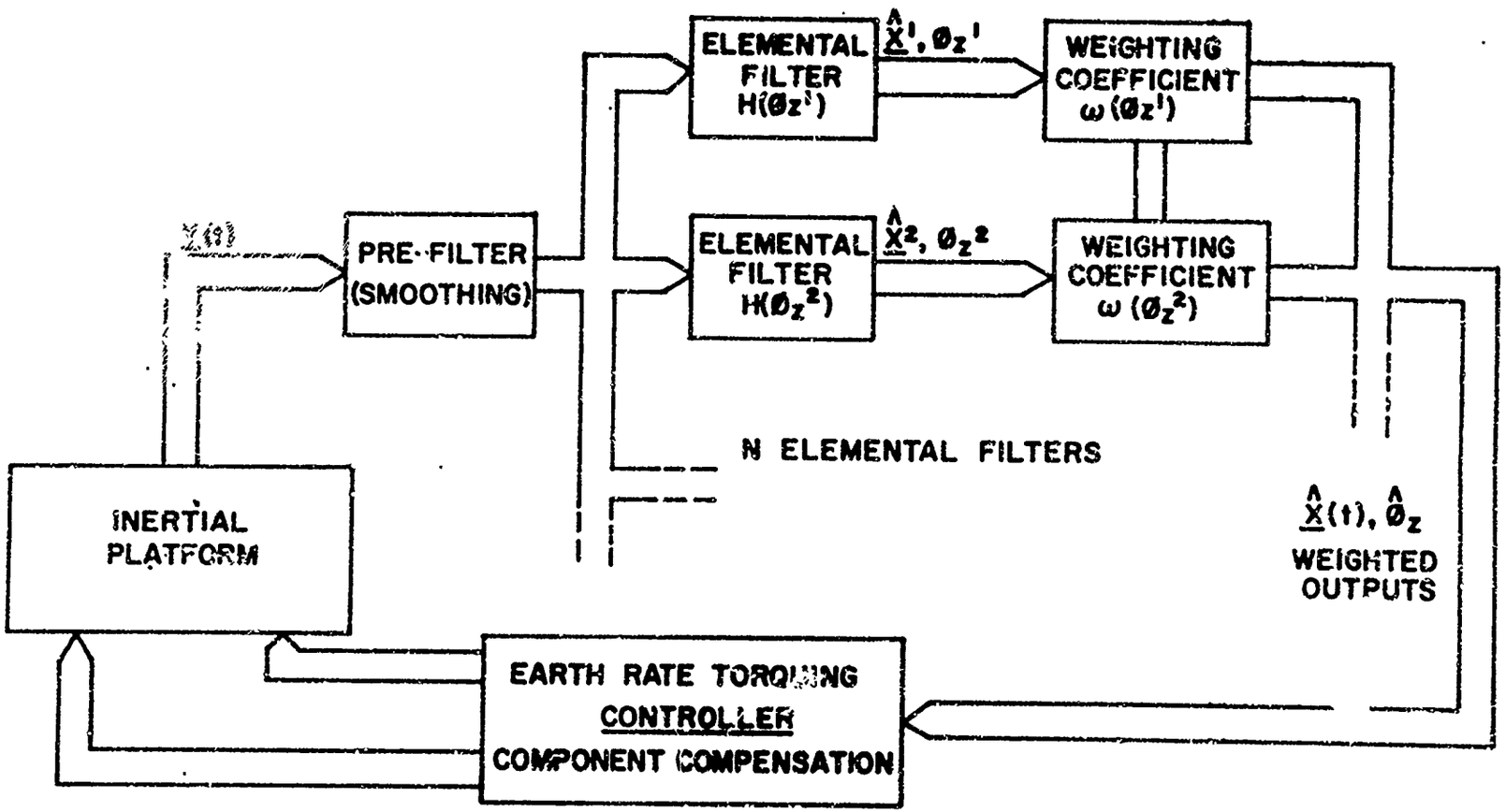

Figure 6-1. Block Diagram of Rapid Initialization Technique.

VII. Rapid Initialization Simulation

To verify that the parameter estimation technique described in this investigation will converge to the true value of the parameter (to a statistical accuracy), a computer simulation of the entire system was programmed for use on a Burroughs - 5500 computer using Extended ALGOL. The inertial platform was simulated by first order difference equations which were iterated every second to approach a continuous system. The outputs of the platform accelerometers were smoothed using straight averaging and fed to the filters. The recursive elemental filter equations were contained in an ALGOL Procedure named Kalman which, when called up, ran through the equations delineated in figure 5-2 using the appropriate $\hat{\phi}_z$, $\hat{\underline{X}}$, and P for the particular elemental filter. The norm of $\tilde{\underline{Y}}$ was also computed in each filter to facilitate computation of the weighting factors. The filter was run every 60 seconds. The covariance propagation equation and state vector propagation equation were run every 10 seconds. This was necessary due to the error introduced by truncation of the series approximation for the transition matrix at the second term. During the time the filter was running, the platform was releveled (approximately 5 seconds real time to relevel).

To compare this rapid initialization technique with present state-of-the-art gyrocompassing, a thermally compensated experimental platform was gyrocompassed from an azimuth error of 1.5° and the dynamic azimuth error recorded on a strip chart. Figure 7-1 illustrates the amount of time necessary to achieve an

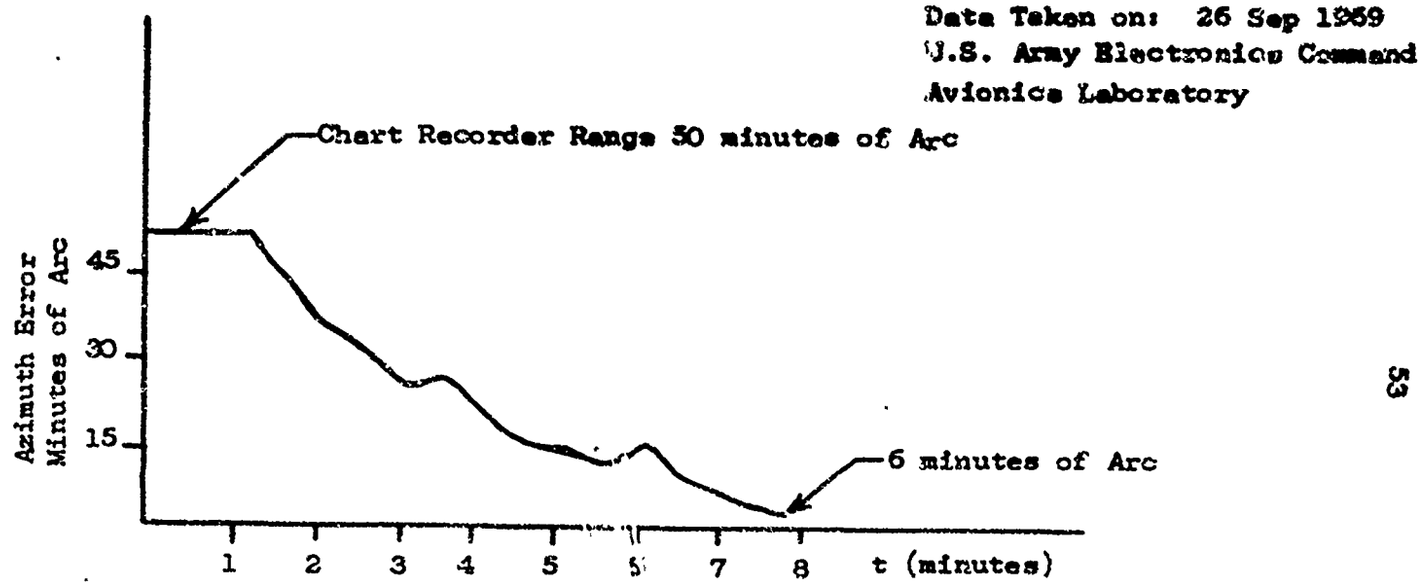

Figure 7-1. Azimuth Error versus Alignment Time for Gyrocompassing Thermally Compensated Experimental Platform.

alignment accuracy of approximately 6 minutes of arc for this system (8 minutes real time). Statistical data on the performance of the inertial components was then obtained from the manufacturer and used in the rapid initialization computer simulation. The data obtained was as follows:

Gyro Random Drift (Correlated): $1\sigma = .02°/HR$

Correlation time = 8,300 sec

Accelerometer Random Drift (Correlated): $1\sigma = 5 \times 10^{-8}g$

Correlation time = 20,000 sec

A measurement noise vector was assumed which consisted of an uncorrelated sequence which changed value every second. Computer runs were then made for azimuth wander angles of 0, 30, and 45 degrees. Five runs were made for each of these azimuth angles, each with a different random sequence. The various random sequences were obtained by changing the 8 digit key in the Algol Procedure "Independent Gaussian Random Variables" (IGRV). The parameter estimator contained 5 elemental filters which were initialized at values of ± 1 and ± 2 degrees about an initial estimate which was in error by 1.5 degrees. An initial triangular weighting distribution centered on the initial estimate was assumed.

The computed variance of the parameter estimator indicated that an accuracy of 6 minutes of arc (1σ) could be reached in 3 minutes of running time (plus approximately 3 times 5 seconds for the filter runs). The actual average error of the fifteen

runs after 3 minutes of running time was 5.9 minutes of arc. Table 7-1 lists the final azimuth wander angle errors for each of the runs. Figure 7-2 is a plot of the average error for the fifteen runs versus time. Typical computed error variances of the parameter estimator as a function of time are illustrated in figure 7-3, and figure 7-4 shows the initial weighting distribution and a typical distribution after the third iteration.

The simulation program is contained in appendix A and the printout for three of the fifteen runs is contained in appendix B.

TABLE 7-1

Final Azimuth Wander Angle Error in Minutes of Arc

Random Generator Key	0°	30°	45°
2 3 2 3 2 3 2 3	7.8	0.2	5.4
3 4 3 4 3 4 3 4	11.5	2.0	1.7
1 2 1 2 1 2 1 2	1.2	5.0	8.0
4 3 5 9 3 3 9 5	15.4	11.8	10.2
2 7 3 7 5 6 3 9	2.1	2.7	3.4

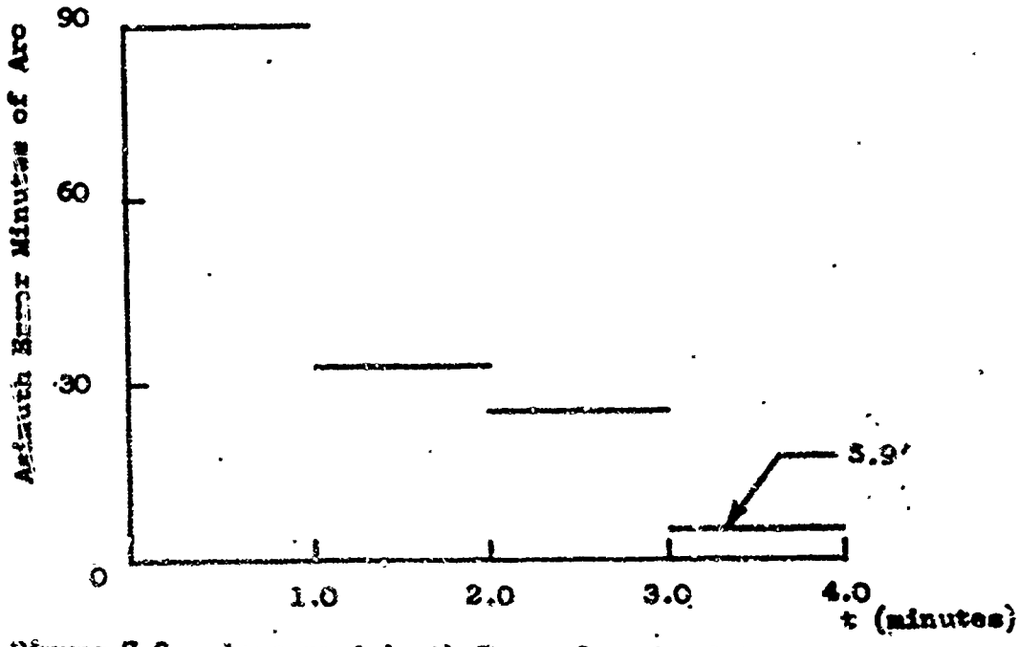

Figure 7-2. Average Azimuth Error for the Parameter Estimator versus Alignment Time (15 runs).

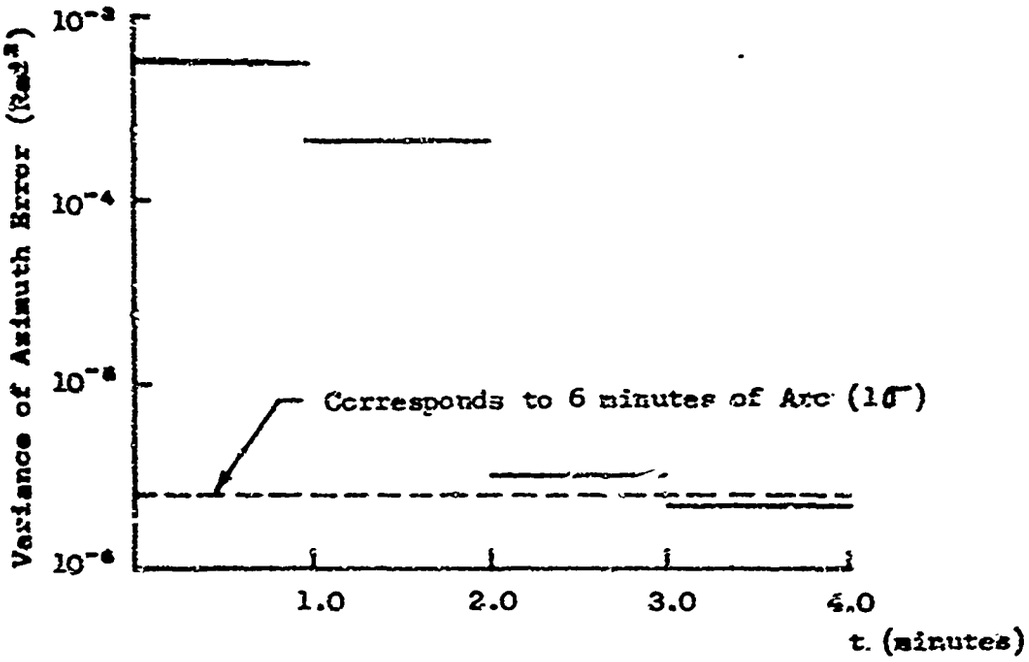

Figure 7-3. Variance of the Parameter Estimator Error versus Alignment Time.

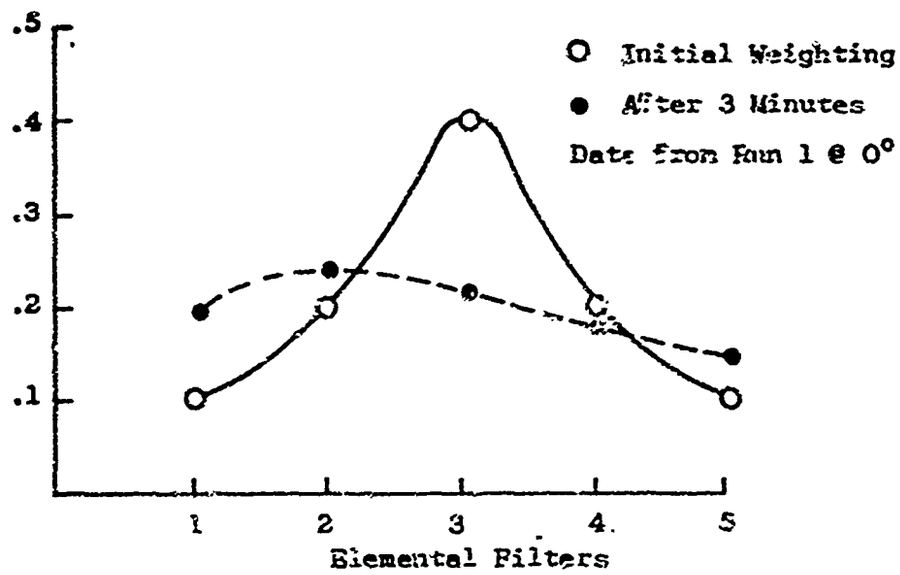

Figure 7-4. Initial Weighting Distribution and Distribution after 3 Minutes.

VIII. Conclusions

The problem of rapid determination of the angular orientation of an inertial platform with respect to the rotating earth reference frame has been investigated and a new method for initialization presented. A linear error model for an inertial platform in an azimuth wander mechanization was derived and the equations expressed in state space form. The basic problem in initialization was identified as a parameter estimation problem.

The two methods of solving parameter estimation problems currently available in the literature were then presented. The first method allowed parameter estimation for a parameter which can assume a continuum of values; however, the method was not time optimal. The second method examined was time optimal; however, it was constrained to problems where the parameter is limited to a finite number of possible values.

By combining features of both methods and using a simple weighting scheme, the time optimal method was extended to permit parameter estimation for a parameter that can assume a continuum of values. In addition, the new parameter estimator provides a variance term for the parameter estimate. This allows the initialization procedure to be terminated when a predetermined variance is achieved.

The necessary algorithms for the parameter estimator were developed and a computer simulation of the system performed. Results of the simulation show a twofold improvement in

initialization time over a state-of-the-art experimental system presently under evaluation.

APPENDIX A

Computer Simulation Program

```
 BEGIN                                                                  00000100
$$A START1                                                              00000200
 "43891"                                                                00000300
$$A START2                                                              00000400
                                                                        00000500
                                                                        00000600
 COMMENT                                                                00000700
 THE FOLLOWING ARE PROGRAM DECLARATIONS                                 00000800
 ----------------------------------------------------------------;      00000900
 DEFINE PRINT=TYPE#;                                                    00001000
 REAL X1,X2,X3,X4,X5,X6,X7,X8,DT,OMEGAY,OMEGAZ,LAT,PHIZ,                00001100
          LAMX,LAMY,LAMZ,MUX,MUY,P,D,DELT,                              00001200
 PHIZHAT1,PHIZHAT2,PHIZHAT3,PHIZHAT4,PHIZHAT5,                          00001300
 YTILN1,YTILN2,YTILN3,YTILN4,YTILN5,PHIZHATW,W1,W2,W3,W4,W5,WD,PW,VT;   00001400
 LABEL L1,L2;                                                           00001500
   INTEGER I,J,T,K,L;                                                   00001600
  ARRAY X[1:8,0:100],A[1:8,1:8],N[1:8],Y[1:2,0:100],W[1:2],M[1:2,1:8],  00001700
 AF,I1,P1,P2,P3,P4,P5,CUE[1:8,1:8],                                     00001800
 XHATW,XHAT1,XHAT2,XHAT3,XHAT4,XHAT5[1:8],YPF,YHAT[1:2],R[1:2,1:2],C1[1:00001900
 8],C2[1:2];                                                            00002000
  FORMAT FB(//,"PLEASE RETURN THIS PRINTOUT TO ",/,                     00002100
  "J A DASARO, MATH ANALYSIS, X51788 ",///,                             00002200
   "THIS PROGRAM IS RAP1 ",//,                                          00002300
 "A SIMULATION OF A RAPID INITIALIZATION TECHNIQUE ",//),               00002400
  "TRUE AZIMUTH ANGLE(PHIZ) = ",F7.3,//,                                00002500
  "AN ESTIMATE OF PHIZ IS MADE EVERY 60 SECONDS ",//,                   00002600
 "THE INITIAL RANDOM NUMBER GENERATOR KEY = ",I8,//),                   00002700
 FE("TIME IN MINUTES = ",F5.2,//),                                      00002800
 FP("THE ELEMENTAL FILTER PHIZ ESTIMATES ARE ",/,                       00002900
 "PHIZHAT1 = ",F7.3,/,                                                  00003000
 "PHIZHAT2 = ",F7.3,/,                                                  00003100
 "PHIZHAT3 = ",F7.3,/,                                                  00003200
 "PHIZHAT4 = ",F7.3,/,                                                  00003300
```

```
"PHIZHAT5 = ",F7.3,/,                                                  00003400
///,                                                                   00003500
"THE WEIGHTING FACTORS ARE ",/,                                        00003600
"W1 = ",F6.4,/,                                                        00003700
"W2 = ",F6.4,/,                                                        00003800
"W3 = ",F6.4,/,                                                        00003900
"W4 = ",F6.4,/,                                                        00004000
"W5 = ",F6.4,/,                                                        00004100
///,                                                                   00004200
"THE DASARU PARAMETER ESTIMATE IS ",F8.4,///,                          00004300
"THE ERROR VARIANCE IS ",E12.5,////),                                  00004400
FF("THE ERROR IN MINUTES OF ARC IS ",F10.5,///),                       00004500
FC("VARIANCE BELOW VALUE CORRESPONDING TO ",/,                         00004600
"· A 1 SIGMA ERROR OF 6 MINUTES OF ARC ",////,                         00004700
"     INITIALIZATION COMPLETE ..... "//////);                          00004800
COMMENT       END OF DECLARATIONS;                                     00004900
                                                                       00005000
```

```
 COMMENT                                                                00005100
 THE FOLLOWING ALGOL PROCEDURE GENERATES TWO INDEPENDENT                00005200
 GAUSSIAN RANDOM SEQUENCES (D1,D2)., EACH WITH A SPECIFIED              00005300
 MEAN AND STANDARD DEVIATION                                            00005400
 ----------------------------------------------------------------;      00005500
PROCEDURE IGRV(MEAN1,MEAN2,SIGMA1,SIGMA2,D1,D2);                        00005600
    VALUE MEAN1,MEAN2,SIGMA1,SIGMA2;                                    00005700
    REAL MEAN1,MEAN2,SIGMA1,SIGMA2,D1,D2;                               00005800
BEGIN                                                                   00005900
REAL X,Y,W,Z,XX,YY;                                                     00006000
                                                                        00006100
                                                                        00006200
                                                                        00006300
    REAL PROCEDURE R;                                                   00006400
         BEGIN                                                          00006500
         P:=3125×P;                                                     00006600
         P:=P-(P DIV 67108864)×67108864;                                00006700
         R:=P/67108864;                                                 00006800
         END OF R;                                                      00006900
    LABEL L;                                                            00007000
  L:X:=R;                                                               00007100
    Y:=2×R-1;                                                           00007200
    XX:=X*2;                                                            00007300
    YY:=Y*2;                                                            00007400
    W:=XX+YY;                                                           00007500
    IF W GTR 1 THEN GO TO L;                                            00007600
    Z:=SQRT(-2×LN(R))/W;                                                00007700
    D1:=SIGMA1×(XX-YY)×Z+MEAN1;                                         00007800
    D2:=2×SIGMA2×X×Y×Z+MEAN2;                                           00007900
    END OF IGRV;                                                        00008000
 COMMENT      END OF RANDOM SEQUENCE GENERATOR;                         00008100
```

```
 COMMENT
 THE FOLLOWING ALGOL PROCEDURES IMPLEMENT THE MATRIX
 OPERATIONS OF MULTIPLICATION,ADDITION,SUBTRACTION,
 TRANSPOSITION,REPLACEMENT,SCALAR MULTIPLICATION,
 AND INVERSION.
 ----------------------------------------------------------;
PROCEDURE MATMUL(A,B,C,L,M,N);
     COMMENT THIS PROCEDURE MULTIPLIES AN L×M MATRIX A BY AN M×N
MATRIX B TO YIELD THE L×M MATRIX C;
VALUE L,M,N;
ARRAY A,B,C[*,*];
INTEGER L,M,N;
BEGIN
INTEGER I,J,K;
FOR I:=1 STEP 1 UNTIL L DO
     BEGIN
     FOR K:=1 STEP 1 UNTIL N DO
          BEGIN
          C[I,K]:=0;
          FOR J:=1 STEP 1 UNTIL M DO
          C[I,K]:=C[I,K]+A[I,J]×B[J,K];
          END;
     END;
END OF MATMUL;
PROCEDURE MATADD(A,B,C,M,N);
VALUE M,N;
ARRAY A,B,C[*,*];
INTEGER M,N;
BEGIN
INTEGER I,J;
FOR I:=1 STEP 1 UNTIL M DO
FOR J :=1 STEP 1 UNTIL N DO
C[I,J]:=A[I,J]+B[I,J];
END OF MATADD;
```

```
PROCEDURE MATSUB(A,B,C,M,N);
VALUE M,N;
INTEGER M,N;
ARRAY A,B,C[*,*];
BEGIN
INTEGER I,J;
FOR I:=1 STEP 1 UNTIL M DO
FOR J:=1 STEP 1 UNTIL N DO

C[I,J]:=A[I,J]-B[I,J];
END OF MATSUB;
PROCEDURE MATRAN(A,B,M,N);
VALUE M,N;
INTEGER M,N;
ARRAY A,B[*,*];
BEGIN
INTEGER I,J;
FOR I:=1 STEP 1 UNTIL M DO
FOR J:=1 STEP 1 UNTIL N DO
B[I,J]:=A[J,I];
END OF MATRAN;
PROCEDURE MATREP(A,B,M,N);
VALUE M,N;
INTEGER M,N;
ARRAY A,B[*,*];
BEGIN
INTEGER I,J;
FOR I:=1 STEP 1 UNTIL M DO
FOR J:=1 STEP 1 UNTIL N DO
A[I,J]:=B[I,J];
END OF MATREP;
```

```
PROCEDURE MATSCA(A,B,S,M,N);                                    00014700
VALUE M,N,S;                                                    00014800
INTEGER M,N;                                                    00014900
REAL S;                                                         00015000
ARRAY A,B[*,*];                                                 00015100
BEGIN                                                           00015200
INTEGER I,J;                                                    00015300
FOR I:=1 STEP 1 UNTIL M DO                                      00015400
FOR J:=1 STEP 1 UNTIL N DO                                      00015500
A[I,J]:=S×B[I,J];                                               00015600
END OF MATSCA;                                                  00015700
PROCEDURE MATINV(A,AI);                                         00015800
ARRAY A,AI[*,*];                                                00015900
BEGIN                                                           00016000
REAL DET;                                                       00016100
INTEGER I,J;                                                    00016200
DET:=A[1,1]×A[2,2]-A[1,2]×A[2,1];                               00016300
AI[1,1]:=A[2,2]/DET;                                            00016400
AI[1,2]:=-A[1,2]/DET;                                           00016500
AI[2,1]:=-A[2,1]/DET;                                           00016600
AI[2,2]:=A[1,1]/DET;                                            00016700
END OF MATINV;                                                  00016800
 COMMENT   END OF MATRIX OPERATIONS ;                           00016900
                                                                00017000
```

```
COMMENT
THE FOLLOWING ALGOL PROCEDURE IMPLEMENTS
THE RECURSIVE EQUATIONS OF A KALMAN FILTER
-----------------------------------------------------------;
 PROCEDURE XALMAN(PHIZHAT,XHAT,PC,YTILN);
     REAL PHIZHAT,YTILN;
     ARRAY XHAT[*],PC[*,*];
BEGIN
  ARRAY PI1,PI2[1:8,1:8],MI1[1:8,1:2],MI2[1:2,1:2],
        MI2I[1:2,1:2],KAL[1:8,1:2],YHAT[1:2],YTIL[1:2],
PHIT,TPHIT[1:8,1:8],
        DELXHAT[1:8],PI3[1:8,1:8],XHATN[1:8],PP[1:8,1:8],MT[1:8,1:2];
FOR I:=1 STEP 1 UNTIL 2 DO
YHAT[I]:=YTIL[I]:=0;
FOR I:=1 STEP 1 UNTIL 8 DO
```

```
DELXHAT[I]:=XHATN[I]:=0;
FOR I:=1 STEP 1 UNTIL 2 DO
FOR J:=1 STEP 1 UNTIL 2 DO
MI2[I,J]:=MI2I[I,J]:=0;
FOR I:=1 STEP 1 UNTIL 8 DO
FOR J:=1 STEP 1 UNTIL 2 DO
MI1[I,J]:=KAL[I,J]:=MT[I,J]:=0;
FOR I:=1 STEP 1 UNTIL 8 DO
FOR J:=1 STEP 1 UNTIL 8 DO
PI1[I,J]:=PI2[I,J]:=PI3[I,J]:=PHIT[I,J]:=TPHIT[I,J]:=PP[I,J]:=0;
```

```
  AF[1,3]:=-UMEGAY×COS(PHIZHAT);
  AF[2,3]:=UMEGAY×SIN(PHIZHAT);
  AF[3,1]:=UMEGAY×COS(PHIZHAT);
  AF[3,2]:=-UMEGAY×SIN(PHIZHAT);
  MATSCA(PI1,AF,DELT,8,8);
  MATADD(I1,PI1,PHIT,8,8);
  MATRAN(PHIT,TPHIT,8,8);
  MATADD(PC,COL,PI1,8,8);
  FOR I:=1 STEP 1 UNTIL 6 DO
BEGIN
  MATMUL(PHIT,PI1,PI2,8,8,8);
  MATMUL(PI2,TPHIT,PP,8,8,8);
  MATREP(PI1,PP,8,8);
END;
  MATRAN(M,MT,8,2);
  MATMUL(PP,MT,MI1,8,8,2);
  MATMUL(M,MI1,MI2,2,8,2);
  MATADD(MI2,R,MI2,2,2);
  MATINV(MI2,MI2I);
  MATMUL(MI1,MI2I,KAL,8,2,2);
 FOR K:=1 STEP 1 UNTIL 6 DO
BEGIN
  FOR I:=1 STEP 1 UNTIL 8 DO
  FOR J:=1 STEP 1 UNTIL 8 DO
    XHATN[I]:=PHIT[I,J]×XHAT[J]+XHATN[I];
  FOR I:=1 STEP 1 UNTIL 8 DO
   BEGIN
 XHAT[I]:=XHATN[I];
 XHATN[I]:=0;
   END;
END;
```

```
  FOR I:=1 STEP 1 UNTIL 2 DO                                    00022900
  FOR J:=1 STEP 1 UNTIL 8 DO                                    00023000
      YHAT[I]:=YHAT[I]+M[I,J]×XHAT[J];                          00023100
  FOR I:=1 STEP 1 UNTIL 2 DO                                    00023200
   YTIL[I]:=YPF[I]-YHAT[I];                                     00023300
  FOR I:=1 STEP 1 UNTIL 8 DO                                    00023400
  FOR J:=1 STEP 1 UNTIL 2 DO                                    00023500
   DELXHAT[I]:=DELXHAT[I]+KAL[I,J]×YTIL[J];                     00023600
  YTILN:=SQRT(YTIL[1]↑2+YTIL[2]↑2);                             00023700
  FOR I:=1 STEP 1 UNTIL 8 DO                                    00023800
    XHAT[I]:=XHAT[I]+DELXHAT[I];                                00023900
  MATMUL(KAL,M,PI3,8,2,8);                                      00024000
  MATSUM(I1,PI3,PI3,8,8);                                       00024100
  MATMUL(PI3,PP,PI2,8,8,8);                                     00024200
  MATREP(PC,PI2,8,8);                                           00024300
  END OF KALMAN;                                                00024400
COMMENT    END OF KALMAN PROCEDURE ;                            00024500
                                                                00024600
                                                                00024700
COMMENT                                                         00024800
```

```
THE FOLLOWING SECTION SETS THE INITIAL CONDITIONS OF                    00024900
THE SIMULATION                                                          00025000
-----------------------------------------------------------------;       00025100
 READ (DATA,X1,X2,X3,X4,X5,X6,X7,X8);                                   00025200
 READ (DATA,D1,LAT,PHIZ);                                               00025300
 READ (DATA,LAMX,LAMY,LAMZ,MUX,MUY);                                    00025400
 READ (DATA,P);                                                         00025500
WRITE(PRINT,FB);                                                        00025600
WRITE(PRINT,FI,PHIZ,P);                                                 00025700
  X[1,0]:=X1;                                                           00025800
  X[2,0]:=X2;                                                           00025900
  X[3,0]:=X3;                                                           00026000
  X[4,0]:=X4;                                                           00026100
  X[5,0]:=X5;                                                           00026200
  X[6,0]:=X6;                                                           00026300
  X[7,0]:=X7;                                                           00026400
  X[8,0]:=X8;                                                           00026500
  FOR I:=1 STEP 1 UNTIL 8 DO                                            00026600
      X[I,0]:=X[I,0]×D2R;                                               00026700
   LAT:=LAT×D2R;                                                        00026800
  PHIZ:=PHIZ×D2R;                                                       00026900
 OMEGAZ:=(7.269190-5)×SIN(LAT);                                         00027000
 OMEGAY:=(7.269190-5)×COS(LAT);                                         00027100
```

```
 A[1,2]:=UMEGAZ;                                                    00027200
 A[1,3]:=-OMEGAY×COS(PHIZ);                                         00027300
 A[1,4]:=1;                                                         00027400
 A[2,1]:=-OMEGAZ;                                                   00027500
 A[2,3]:=UMEGAY×SIN(PHIZ);                                          00027600
 A[2,5]:=1;                                                         00027700
 A[3,1]:=UMEGAY×COS(PHIZ);                                          00027800
 A[3,2]:=-UMEGAY×SIN(PHIZ);                                         00027900
 A[3,6]:=1;                                                         00028000
 A[4,4]:=-1/LAMX;                                                   00028100
 A[5,5]:=-1/LAMY;                                                   00028200
 A[6,6]:=-1/LAMZ;                                                   00028300
 A[7,7]:=-1/MUX;                                                    00028400
  A[8,8]:=-1/MUY;                                                   00028500
M[1,1]:=1;                                                          00028600
M[1,8]:=1;                                                          00028700
M[2,2]:=-1;                                                         00028800
M[2,7]:=1;                                                          00028900
AF[1,2]:=UMEGAZ;                                                    00029000
AF[1,4]:=1;                                                         00029100
AF[2,1]:=-UMEGAZ;                                                   00029200
AF[2,5]:=1;                                                         00029300
AF[3,6]:=1;                                                         00029400
AF[4,4]:=-1/LAMX;                                                   00029500
AF[5,5]:=-1/LAMY;                                                   00029600
AF[6,6]:=-1/LAMZ;                                                   00029700
AF[7,7]:=-1/MUX;                                                    00029800
AF[8,8]:=-1/MUY;                                                    00029900
I1[1,1]:=1;                                                         00030000
I1[2,2]:=1;                                                         00030100
I1[3,3]:=1;                                                         00030200
I1[4,4]:=1;                                                         00030300
I1[5,5]:=1;                                                         00030400
I1[6,6]:=1;                                                         00030500
I1[7,7]:=1;                                                         00030600
I1[8,8]:=1;                                                         00030700
```

```
 DELT:=10;                                                          00030800
CUE[4,4]:=CUE[5,5]:=CUE[6,6]:=2.32@-18;                             00030900
CUE[7,7]:=CUE[8,8]:=25@-14;                                         00031000


R[1,1]:=R[2,2]:=1@-12;                                              00031100
P1[1,1]:=P2[1,1]:=P3[1,1]:=P4[1,1]:=P5[1,1]:=2.5@-9;                00031200
P1[2,2]:=P2[2,2]:=P3[2,2]:=P4[2,2]:=P5[2,2]:=2.5@-9;                00031300
P1[3,3]:=P2[3,3]:=P3[3,3]:=P4[3,3]:=P5[3,3]:=6.8@-4;                00031400
P1[4,4]:=P2[4,4]:=P3[4,4]:=P4[4,4]:=P5[4,4]:=93.6@-16;              00031500
P1[5,5]:=P2[5,5]:=P3[5,5]:=P4[5,5]:=P5[5,5]:=93.6@-16;              00031600
P1[6,6]:=P2[6,6]:=P3[6,6]:=P4[6,6]:=P5[6,6]:=93.6@-16;              00031700
P1[7,7]:=P2[7,7]:=P3[7,7]:=P4[7,7]:=P5[7,7]:=25@-10;                00031800
P1[8,8]:=P2[8,8]:=P3[8,8]:=P4[8,8]:=P5[8,8]:=25@-10;                00031900
 PHIZHAT1:=PHIZ-0.5×D2R;                                            00032000
 PHIZHAT2:=PHIZ+0.5×D2R;                                            00032100
 PHIZHAT3:=PHIZ+1.5×D2R;                                            00032200
 PHIZHAT4:=PHIZ+2.5×D2R;                                            00032300
 PHIZHAT5:=PHIZ+3.5×D2R;                                            00032400
 XHAT1[3]:=2×D2R;                                                   00032500
 XHAT2[3]:=1×D2R;                                                   00032600
 XHAT3[3]:=0;                                                       00032700
 XHAT4[3]:=-1×D2R;                                                  00032800
 XHAT5[3]:=-2×D2R;                                                  00032900
                                                                    00033000
```

```
COMMENT
THE FOLLOWING SECTION IS THE SIMULATION PROGRAM
-----------------------------------------------------;
L1:
   FOR I:=1 STEP 1 UNTIL 60 DO
BEGIN
  IGRV(0,0,1.52@-9,1.52@-9,N[4],N[5]);
  IGRV(0,0,1.52@-9,0.5@-6,N[6],N[7]);
 IGRV(0,0,0.50@-6,0.50@-6,N[8],D);
      FOR I:=1 STEP 1 UNTIL 8 DO
BEGIN
         FOR J:=1 STEP 1 UNTIL 8 DO
X[I,T]:=X[I,T]+A[I,J]×X[J,T-1]×DT;
X[I,T]:=X[I,T]+X[I,T-1]+N[I]×DT+C1[I]×DT;
END;
 IGRV(0,0,1.0@-6,1.0@-6,W[1],W[2]);
   FOR K:=1 STEP 1 UNTIL 2 DO
BEGIN
  FOR L:=1 STEP 1 UNTIL 8 DO
       Y[K,T]:=Y[K,T]+M[K,L]×X[L,T];
       Y[K,T]:=Y[K,T]+W[K]+C2[K];
END;
END;

 FOR T:=0 STEP 20 UNTIL 60 DO



 YPF[1]:=YPF[2]:=0;
  FOR I:=1 STEP 1 UNTIL 2 DO
    BEGIN
   FOR J:=1 STEP 2 UNTIL 59 DO
        YPF[I]:=Y[I,J]+Y[I,J+1]+YPF[I];
       YPF[I]:=YPF[I]/30;
     END;
```

```
 KALMAN(PHIZHAT1,XHAT1,P1,YTILN1);
 KALMAN(PHIZHAT2,XHAT2,P2,YTILN2);
 KALMAN(PHIZHAT3,XHAT3,P3,YTILN3);
 KALMAN(PHIZHAT4,XHAT4,P4,YTILN4);
 KALMAN(PHIZHAT5,XHAT5,P5,YTILN5);
  WD:=4×(YTILN1+YTILN2+YTILN3+YTILN4+YTILN5);


  W1:=(YTILN2+YTILN3+YTILN4+YTILN5)/WD;
  W2:=(YTILN1+YTILN3+YTILN4+YTILN5)/WD;
  W3:=(YTILN1+YTILN2+YTILN4+YTILN5)/WD;
  W4:=(YTILN1+YTILN2+YTILN3+YTILN5)/WD;
  W5:=(YTILN1+YTILN2+YTILN3+YTILN4)/WD;
IF VT LEQ 0 THEN
BEGIN
 W1:=0.1;
 W2:=0.2;
 W3:=0.4;
 W4:=0.2;
 W5:=0.1;
WRITE(PRIN1,FE,VT);
WRITE(PRINT,FP,PHIZHAT1×R2D,PHIZHAT2×R2D,PHIZHAT3×R2D,
 PHIZHAT4×R2D,PHIZHAT5×R2D,W1,W2,W3,W4,W5,PHIZHAT3×R2D,
 P3[3,3]);
WRITE(PRINT,FF,X[3,0]×R2D×60);
END;
  PHIZHAT1:=PHIZHAT1+XHAT1[3];
  PHIZHAT2:=PHIZHAT2+XHAT2[3];
  PHIZHAT3:=PHIZHAT3+XHAT3[3];
  PHIZHAT4:=PHIZHAT4+XHAT4[3];
  PHIZHAT5:=PHIZHAT5+XHAT5[3];
PHIZHATW:=W1×PHIZHAT1+W2×PHIZHAT2+W3×PHIZHAT3+W4×PHIZHAT4
       +W5×PHIZHAT5;
```

```
   FOR I:=1 STEP 1 UNTIL 8 DO
XHATW[I]:=W1×XHAT1[I]+W2×XHAT2[I]+W3×XHAT3[I]+W4×XHAT4[I]
+W5×XHAT5[I];
   X[1,0]:=0;
   X[2,0]:=0;
   X[3,0]:=PHIZ-PHIZHATW;
   X[4,0]:=X[4,60];
   X[5,0]:=X[5,60];
   X[6,0]:=X[6,60];
   X[7,0]:=X[7,60];
   X[8,0]:=X[8,60];
   C1[1]:=-XHATW[4];
   C1[2]:=-XHATW[5];
   C1[3]:=-XHATW[6];
   C2[1]:=-XHATW[8];
   C2[2]:=-XHATW[7];
   PW:=W1×P1[3,3]+W2×P2[3,3]+W3×P3[3,3]+W4×P4[3,3]+W5×P5[3,3];
 FOR I:=4,5,6,7,8 DO
  BEGIN
XHAT1[I]:=XHAT1[I]-XHATW[I];
XHAT2[I]:=XHAT2[I]-XHATW[I];
XHAT3[I]:=XHAT3[I]-XHATW[I];
XHAT4[I]:=XHAT4[I]-XHATW[I];
XHAT5[I]:=XHAT5[I]-XHATW[I];
  END;
XHAT1[3]:=PHIZHAT1-PHIZHATW;
XHAT2[3]:=PHIZHAT2-PHIZHATW;
XHAT3[3]:=PHIZHAT3-PHIZHATW;
XHAT4[3]:=PHIZHAT4-PHIZHATW;
XHAT5[3]:=PHIZHAT5-PHIZHATW;
```

```
 FOR I:=1,2 DO                                                  00042800
BEGIN                                                           00042900
 XHAT1[I]:=0;                                                   00043000
 XHAT2[I]:=0;                                                   00043100
 XHAT3[I]:=0;                                                   00043200
 XHAT4[I]:=0;                                                   00043300
 XHAT5[I]:=0;                                                   00043400


END;                                                            00043500
WRITE(PRINT,FE,(VT+1));                                         00043600
                                                                00043700
WRITE(PRINT,FP,PHIZHAT1×R2D,PHIZHAT2×R2D,                       00043800
PHIZHAT3×R2D,PHIZHAT4×R2D,PHIZHAT5×R2D,W1,                      00043900
W2,W3,W4,W5,PHIZHATW×R2D,PW);                                   00044000
WRITE(PRINT,FF,X[3,0]×R2D×60);                                  00044100
  FOR J:=1 STEP 1 UNTIL 6 DO                                    00044200
 FOR I:=1 STEP 1 UNTIL 60 DO                                    00044300
         X[J,I]:=0;                                             00044400
  FOR J:=1 STEP 1 UNTIL 2 DO                                    00044500
  FOR I:=1 STEP 1 UNTIL 60 DO                                   00044600
        Y[J,I]:=0;                                              00044700
IF PW LEQ 3.0@-6 THEN GO TO L2;                                 00044800
       VT:=VT+1;                                                00044900
  IF VT GTR 10 THEN GO TO L2                                    00045000
       ELSE GO TO L1;                                           00045100
    L2:                                                         00045200
WRITE(PRINT,FC);                                                00045300
$$A FINI                                                        00045400
END.                                                            00045500
```

APPENDIX B

Computer Printout

```
THIS PROGRAM IS RAP1

A SIMULATION OF A RAPID INITIALIZATION TECHNIQUE

TRUE AZIMUTH ANGLE(PHIZ) =    0.000

AN ESTIMATE OF PHIZ IS MADE EVERY 60 SECONDS

THE INITIAL RANDOM NUMBER GENERATOR KEY = 23232323

TIME IN MINUTES =  0.00

THE ELEMENTAL FILTER PHIZ ESTIMATES ARE
PHIZHAT1 =  -0.500
PHIZHAT2 =   0.500
PHIZHAT3 =   1.500
PHIZHAT4 =   2.500
PHIZHAT5 =   3.500

THE WEIGHTING FACTORS ARE
W1 = 0.1000
W2 = 0.2000
W3 = 0.4000
W4 = 0.2000
W5 = 0.1000

THE DASARO PARAMETER ESTIMATE IS   1.5000

THE ERROR VARIANCE IS   6.800000-04

THE ERROR IN MINUTES OF ARC IS  -90.00000

TIME IN MINUTES =  1.00

THE ELEMENTAL FILTER PHIZ ESTIMATES ARE
PHIZHAT1 =  -0.696
PHIZHAT2 =  -0.095
PHIZHAT3 =   0.507
PHIZHAT4 =   1.109
PHIZHAT5 =   1.711
```

```
THE WEIGHTING FACTORS ARE
W1 = 0.1000
W2 = 0.2000
W3 = 0.4000
W4 = 0.2000
W5 = 0.1000


THE DASARO PARAMETER ESTIMATE IS    0.5072

THE ERROR VARIANCE IS  2.706810-04


THE ERROR IN MINUTES OF ARC IS  -30.43337


TIME IN MINUTES =  2.00

THE ELEMENTAL FILTER PHIZ ESTIMATES ARE
PHIZHAT1 =  -0.480
PHIZHAT2 =  -0.071
PHIZHAT3 =   0.338
PHIZHAT4 =   0.748
PHIZHAT5 =   1.158


THE WEIGHTING FACTORS ARE
W1 = 0.1789
W2 = 0.2180
W3 = 0.2391
W4 = 0.2016
W5 = 0.1623


THE DASARO PARAMETER ESTIMATE IS    0.3183

THE ERROR VARIANCE IS  3.148060-06


THE ERROR IN MINUTES OF ARC IS  -19.09694
```

```
TIME IN MINUTES =  3.00

THE ELEMENTAL FILTER PHIZ ESTIMATES ARE
PHIZHAT1 =  -0.652
PHIZHAT2 =  -0.366
PHIZHAT3 =  -0.080
PHIZHAT4 =   0.208
PHIZHAT5 =   0.497


THE WEIGHTING FACTORS ARE
W1 = 0.2069
W2 = 0.2423
W3 = 0.2199
W4 = 0.1833
W5 = 0.1467


THE DASARO PARAMETER ESTIMATE IS  -0.1305

THE ERROR VARIANCE IS  2.983100-06


THE ERROR IN MINUTES OF ARC IS    7.83056

VARIANCE BELOW VALUE CORRESPONDING TO
  A 1 SIGMA ERROR OF 6 MINUTES OF ARC

     INITIALIZATION COMPLETE .....
```

```
THIS PROGRAM IS RAP1

A SIMULATION OF A RAPID INITIALIZATION TECHNIQUE


TRUE AZIMUTH ANGLE(PHIZ) =  30.000

AN ESTIMATE OF PHIZ IS MADE EVERY 60 SECONDS

THE INITIAL RANDOM NUMBER GENERATOR KEY = 23232323


TIME IN MINUTES =  0.00


THE ELEMENTAL FILTER PHIZ ESTIMATES ARE
PHIZHAT1 =  29.500
PHIZHAT2 =  30.500
PHIZHAT3 =  31.500
PHIZHAT4 =  32.500
PHIZHAT5 =  33.500


THE WEIGHTING FACTORS ARE
W1 = 0.1000
W2 = 0.2000
W3 = 0.4000
W4 = 0.2000
W5 = 0.1000


THE DASARO PARAMETER ESTIMATE IS  31.5000

THE ERROR VARIANCE IS     6.800000-04


THE ERROR IN MINUTES OF ARC IS  -90.00000


TIME IN MINUTES =  1.00


THE ELEMENTAL FILTER PHIZ ESTIMATES ARE
PHIZHAT1 =  29.297
PHIZHAT2 =  29.899
PHIZHAT3 =  30.501
PHIZHAT4 =  31.104
PHIZHAT5 =  31.707
```

```
THE WEIGHTING FACTORS ARE
W1 = 0.1000
W2 = 0.2000
W3 = 0.4000
W4 = 0.2000
W5 = 0.1000

THE DASARO PARAMETER ESTIMATE IS  30.5014

THE ERROR VARIANCE IS  2.706810-04

THE ERROR IN MINUTES OF ARC IS  -30.08420

TIME IN MINUTES =  2.00

THE ELEMENTAL FILTER PHIZ ESTIMATES ARE
PHIZHAT1 =  29.620
PHIZHAT2 =  30.030
PHIZHAT3 =  30.442
PHIZHAT4 =  30.853
PHIZHAT5 =  31.265

THE WEIGHTING FACTORS ARE
W1 = 0.1737
W2 = 0.2122
W3 = 0.2393
W4 = 0.2067
W5 = 0.1681

THE DASARO PARAMETER ESTIMATE IS  30.4351

THE ERROR VARIANCE IS  3.148060-06

THE ERROR IN MINUTES OF ARC IS  -26.10787
```

```
TIME IN MINUTES =  3.00

THE ELEMENTAL FILTER PHIZ ESTIMATES ARE
PHIZHAT1 =  29.468
PHIZHAT2 =  29.755
PHIZHAT3 =  30.042
PHIZHAT4 =  30.330
PHIZHAT5 =  30.620

THE WEIGHTING FACTORS ARE
W1 = 0.2046
W2 = 0.2379
W3 = 0.2213
W4 = 0.1860
W5 = 0.1502

THE DASARO PARAMETER ESTIMATE IS  29.9967

THE ERROR VARIANCE IS  2.983170-06

THE ERROR IN MINUTES OF ARC IS    0.19943

VARIANCE BELOW VALUE CORRESPONDING TO
 A 1 SIGMA ERROR OF 6 MINUTES OF ARC

    INITIALIZATION COMPLETE .....
```

```
THIS PROGRAM IS RAP1

A SIMULATION OF A RAPID INITIALIZATION TECHNIQUE

TRUE AZIMUTH ANGLE(PHIZ) =  45.000

AN ESTIMATE OF PHIZ IS MADE EVERY 60 SECONDS

THE INITIAL RANDOM NUMBER GENERATOR KEY = 23232323

TIME IN MINUTES =  0.00

THE ELEMENTAL FILTER PHIZ ESTIMATES ARE
PHIZHAT1 =  44.500
PHIZHAT2 =  45.500
PHIZHAT3 =  46.500
PHIZHAT4 =  47.500
PHIZHAT5 =  48.500


THE WEIGHTING FACTORS ARE
W1 = 0.1000
W2 = 0.2000
W3 = 0.4000
W4 = 0.2000
W5 = 0.1000


THE DASARO PARAMETER ESTIMATE IS  46.5000

THE ERROR VARIANCE IS     6.80000@-04


THE ERROR IN MINUTES OF ARC IS  -90.00000

TIME IN MINUTES =  1.00

THE ELEMENTAL FILTER PHIZ ESTIMATES ARE
PHIZHAT1 =  44.301
PHIZHAT2 =  44.904
PHIZHAT3 =  45.507
PHIZHAT4 =  46.110
PHIZHAT5 =  46.713
```

THE WEIGHTING FACTORS ARE
W1 = 0.1000
W2 = 0.2000
W3 = 0.4000
W4 = 0.2000
W5 = 0.1000

THE DASARO PARAMETER ESTIMATE IS 45.5068

THE ERROR VARIANCE IS 2.706810-04

THE ERROR IN MINUTES OF ARC IS -30.40692

TIME IN MINUTES = 2.00

THE ELEMENTAL FILTER PHIZ ESTIMATES ARE
PHIZHAT1 = 44.688
PHIZHAT2 = 45.099
PHIZHAT3 = 45.511
PHIZHAT4 = 45.923
PHIZHAT5 = 46.336

THE WEIGHTING FACTORS ARE
W1 = 0.1706
W2 = 0.2090
W3 = 0.2392
W4 = 0.2098
W5 = 0.1714

THE DASARO PARAMETER ESTIMATE IS 45.5123

THE ERROR VARIANCE IS 3.148060-06

THE ERROR IN MINUTES OF ARC IS -30.74099

```
TIME IN MINUTES =  3.00

THE ELEMENTAL FILTER PHIZ ESTIMATES ARE
PHIZHAT1 =  44.557
PHIZHAT2 =  44.844
PHIZHAT3 =  45.131
PHIZHAT4 =  45.419
PHIZHAT5 =  45.709

THE WEIGHTING FACTORS ARE
W1 = 0.2027
W2 = 0.2349
W3 = 0.2222
W4 = 0.1878
W5 = 0.1524

THE DASARO PARAMETER ESTIMATE IS  45.0894

THE ERROR VARIANCE IS  2.983160-06

THE ERROR IN MINUTES OF ARC IS   -5.36467

VARIANCE BELOW VALUE CORRESPONDING TO
  A 1 SIGMA ERROR OF 6 MINUTES OF ARC

     INITIALIZATION COMPLETE .....
```

BIBLIOGRAPHY

Bachman, K.L., Determination and Application of Inertial Component Warm-Up Characteristics, Naval Air Development Center Report AM-6721, August 1967.

Brown, R.G., Notes on Inertial Navigation, Electrical Engineering Department, Iowa State University, June 1968.

Broxmeyer, C., Inertial Navigation System, McGraw-Hill Book Company, 1964.

Cannon, R.H. Jr., "Alignment of Inertial Systems by Gyrocompassing Linear Theory", Journal of the Aerospace Sciences, Vol. 28, Nov. 1961.

Derusso, P.M., Roy, R.J., Close, C.M., State Variables for Engineers, John Wiley and Sons, Inc., 1966.

Dushman, A., "On Gyro Drift Models and Their Evaluation", IRE Transactions on Aerospace and Navigational Electronics, ANE-9, pages 230-234, 1962.

Jurenka, F.D., Leondes, C.T., "Optimum Alignment of an Inertial Autonavigator", IEEE Transactions on Aerospace and Electronic Systems, Vol. AES-3, No. 6 Nov 1967.

Kalman, R.E., "A New Approach to Linear Filtering and Prediction Problems", Journal of Basic Engineering, ASME TRANS., Series D, 82 1960 PP 35-45.

Kalman, R.E., Bucy, R.S., "New Results in Linear Filtering and Prediction Theory", Trans. ASME, Journal of Basic Engineering, Vol. 83, PP 95-108 March 1961.

Knight, J.A., "The Development of a Kalman Filtering Algorithm for Hybrid Navigation Systems for Army Aircraft", to be presented at U.S. Army Science Conference, June 17 - 19, 1970 at U.S. Military Academy.

Lanning, J. H. Jr., Battin, R.H., Random Processes in Automatic Control, McGraw-Hill Book Company, 1956. Pages 142-144.

Lee, Y.W., Statistical Theory of Communication, John Wiley and Sons, Inc., 1964.

Magill, D.T., "Optimal Adaptive Estimation of Sampled Stochastic Processes", Tech. Rep. No. 6302-3 Stanford Electronics Laboratories, December 1963.

Magill, D.T., "Optimal Adaptive Estimation of Sampled Stochastic Processes", IEEE Trans. on Automatic Control, Vol AC-10, No. 4, October 1965, PP 434-439.

Martin, E.H., Bement, W.A., et al, Study and Experimentation of Rapid Reaction Inertial Navigation Systems, Autonetics Technical Report AFAL-TR-67-122, Nov. 1967.

Newton, G.C. Jr., Gould, L.A., Kaiser, J.F., Analytical Design of Linear Feedback Controls, John Wiley and Sons, Inc., 1964.

O'Donnell, C.F., "Inertial Navigation," Journal of the Franklin Institute, Vol. 266, No. 4 (Part I), Oct., and No. 5 (Part II), November 1958.

Ogata, K., State Space Analysis of Control Systems, Prentice-Hall, Inc., 1967.

Pitman, G.R. Jr., Inertial Guidance, John Wiley and Sons, 1962.

Powers, H.B. Jr., Henderson, V.D., Analytic Thermal Compensation of Fast Reaction Inertial Navigation Systems, Autonetics Technical Report X6-957/3111, April 1966.

Sorenson, H.W., "Kalman Filtering Techniques", in Leondes, C.T., ed., Advances in Control Systems, vol. 3, New York, Academic Press, 1966, pp 219-292.

Thomas, I.L., Notes on the Fundamental Problems Involved In Determining True North by Gyroscopic Methods, Technical Note No. I.E.E. 56, Royal Aircraft Establishment, August 1964.

Glossary

X_n, Y_n, Z_n	local level right handed triad. X_n is level and pointing east, Y_n is level and north, and Z_n is up.
X_p, Y_p, Z_p	mutually orthogonal platform axes.
Ω	earth's rotation rate with respect to the inertial or fixed frame.
Ω_{y_n}	level component of earth's rate along Y_n.
Ω_{x_n}	level component of earth's rate along X_n.
Ω_{z_n}	vertical component of earth's rate along Z_n.
λ	latitude.
ϕ_z	azimuth wander angle.
$\hat{\phi}_z$	estimate of ϕ_z.
$\Delta\ \phi_z$	difference between ϕ_z and $\hat{\phi}_z$.
$\Delta\ \phi_x$, $\Delta\ \phi_y$	angles between the locally level plane and the platform's Y_p and X_p axes, i.e., $\Delta\ \phi_x$ is the angle between Y_p and the locally level plane measured by a right handed rotation about X_p, similarly for $\Delta\ \phi_y$.
E_y, E_x	errors in earth's rate torquing to the Y and X gyros respectively due to error in azimuth wander angle.
$E_{y_{cc}}$, $E_{x_{cc}}$, $E_{z_{cc}}$	errors in torquing to the Y, X, Z gyros due to cross-coupling effects.
g	the gravity vector; defined to be positive in the vertical upward direction.

A_y, A_x	platform level axes accelerometer measurements.
U	zero mean Gaussian white noise.
ϵ_x, ϵ_y, ϵ_z	exponentially correlated random gyro drifts.
$\phi_{\epsilon\epsilon}(\tau)$	autocorrelation function of random gyro drift.
$\phi_{UU}(\tau)$	autocorrelation function of Gaussian white noise.
$\delta(\tau)$	Dirac delta function.
$\Phi_{\epsilon\epsilon}(\omega)$	power density spectrum of random gyro drift.
$\Phi_{UU}(\omega)$	power density spectrum of Gaussian white noise.
σ	standard deviation of a random process.
σ^2	variance of a random process.
λ_x, λ_y, λ_z	"correlation times" for the random gyro drifts; values of for which the exponential autocorrelation functions decrease to $1/e\,\sigma^2$.
e	natural logorithm base.
μ_x, μ_y	"correlation times" for the random accelerometer drifts.
α_x, α_y	accelerometer's random drifts.
$\underline{X}$	error state vector.
A	system dynamics matrix.
$\underline{U}$	zero mean Gaussian white noise vector.
$\underline{Y}$	measurement vector.
M	measurement matrix.
$\underline{V}$	additive measurement noise.
$H(\hat{\phi}_z^{\,i})$	elemental filter with $\phi_z^{\,i}$ parameter estimate.
$\hat{\underline{X}}$	estimate of $\underline{X}$.
$\hat{\underline{Y}}$	estimate of $\underline{Y}$.

$\underline{\tilde{Y}}$	difference between actual measurement $\underline{Y}$, and estimated measurement, $\underline{\hat{Y}}$.
$\| \underline{\tilde{Y}} \|$	norm of $\underline{\tilde{Y}}$.
$\omega(\hat{\phi}_z^{\,i})$	weighting factor for outputs of elemental filter with $\hat{\phi}_z^{\,i}$ parameter estimate.
P	covariance matrix of errors in state vector estimate.
E	expectation operator.
$\Phi(t+\Delta t, t)$	state transition matrix over the interval t to t + Δ t.
Q	matrix of variances of input forcing function, $\underline{U}$.
K	Kalman gain matrix.
R	matrix of additive noise variances.

Index

Accuracy of self-contained alignment schemes, 6
Additive noise, 32
Approximations,
  small angle, 14, 17
Auto-correlation functions, 19
Azimuth, alignment, 3
  gyro, 3
  references, 3
  wander angle, 5, 11
Controller,
  platform, 48
Correlation time, 21
Covariance matrix, 42
  propagated, 42
Cross-coupling errors, 16
Dirac delta function, 20
Earth's rate, 10
Elemental filter, 41
  block diagram, 45
  computer algorithm, 46
Error model,
  block diagram, 24
Error vector, 28
Feedback,
  in elemental filter, 42
Gaussian white noise, 19
Gyrocompassing, 3
  in polar regions, 5
Gravity, 15
Inertial Component, warm-up
  behavior, 6
  random drifts, 6, 18
Inertial frame, 2
Inertial measurement unit, 1
Inertial navigation system, 1
Inertial platform, 2
Initial conditions, 1
Kalman, R.E., 33
  gain matrix, 44
Latitude, 10
Leveling, platform, 3
Local level triad, 2
Magill, D.T., 34
Magnetic, compass, 6, 14
  variation, 14
Measurement, vector, 28
  matrix, 32
  expected, 43
Navigation reference frame, 2

Noise, measurement, 22, 6
Noise vector, 32
Norm, of a vector, 37
Parameter estimation, 29, 32
Power density spectrum, 20
Random, accelerometer drifts, 22
  gyro drifts, 21
Random processes, 18
Rotation matrix, 12
Schuler-tuned, 2
Shaping filter, 20
Simulation,
  computer, 52
Sorenson, H.W., 33
Standard error, 21
State space equations, 26
State vector, 28
Stationary system, 3
Theodolites, electronic, 3
Thermal compensation, 6
Time optimal parameter estimator, 36
Torquing, error, 13
Transition matrix, 42
Variance,
  of white noise, 20
  of parameter estimate error, 38
Weighting factor, 37

Security Classification

DOCUMENT CONTROL DATA - R & D

(Security classification of title, body of abstract and indexing annotation must be entered when the overall report is classified)

1. ORIGINATING ACTIVITY (Corporate author) U. S. Army Electronics Command Fort Monmouth, New Jersey 07703	2a. REPORT SECURITY CLASSIFICATION UNCLASSIFIED 2b. GROUP

3. REPORT TITLE

Rapid Initialization of Inertial Navigation Systems Through Parameter Estimation

4. DESCRIPTIVE NOTES (Type of report and inclusive dates)

Technical Report

5. AUTHOR(S) (First name, middle initial, last name)

Joseph A. Dasaro

6. REPORT DATE March 1970	7a. TOTAL NO. OF PAGES 93	7b. NO. OF REFS 22
8a. CONTRACT OR GRANT NO. b. PROJECT NO. 1H1-63207-D235-08-09 c. d.	9a. ORIGINATOR'S REPORT NUMBER(S) ECOM-3243 9b. OTHER REPORT NO(S) (Any other numbers that may be assigned this report)	

10. DISTRIBUTION STATEMENT

This document has been approved for public release and sale; its distribution is unlimited.

11. SUPPLEMENTARY NOTES	12. SPONSORING MILITARY ACTIVITY U. S. Army Electronics Command ATTN: AMSEL-VL-N Fort Monmouth, New Jersey 07703

13. ABSTRACT

The accuracy of an aircraft inertial navigation system depends upon the accuracy with which the system is initially aligned. One procedure for initial alignment involves the use of an external reference. This method utilizes equipment which is much too elaborate for normal operational use. An alternate procedure uses the system's inertial sensors in a self-contained method. If sufficient time were available, the self-contained method could achieve accuracies commensurate with the sensor accuracies; however, in an operational environment it is usually necessary to sacrifice some accuracy in the interest of achieving a more rapid initiation. This dissertation investigates the methods presently available for initialization of an inertial platform in an azimuth wander or free azimuth instrumentation and presents a new method for rapid initialization. The paramount problem is the determination of the initial azimuth angle in minimum time in the presence of random gyro drifts, random accelerometer drifts, and measurement noise.

DD FORM 1 NOV 65 1473 REPLACES DD FORM 1473, 1 JAN 64, WHICH IS OBSOLETE FOR ARMY USE.

Security Classification

Security Classification

14. KEY WORDS	LINK A ROLE	LINK A WT	LINK B ROLE	LINK B WT	LINK C ROLE	LINK C WT
Gyrocompass						
Align						
Azimuth Wander						
Free Azimuth						

ESC-FM - 1232 - 70

Security Classification