AD705988

R 674

Technical Report

WATER PERMEABILITY OF COATING FILMS USING A RADIOISOTOPE TRACER TECHNIQUE

April 1970

Sponsored by

DIRECTOR OF NAVY LABORATORIES

NAVAL CIVIL ENGINEERING LABORATORY

Port Hueneme, California

Reproduced by the
CLEARINGHOUSE
for Federal Scientific & Technical
Information Springfield Va 22151

This document has been approved for public release and sale; its distribution is unlimited.

36

WATER PERMEABILITY OF COATING FILMS USING A RADIOISOTOPE TRACER TECHNIQUE

Technical Report R-674

Z-R011-01-01-087

by

Eddy S. Matsui

ABSTRACT

The report deals with the development of an accurate and rapid method of determining moisture permeability through protective coatings using radiochemical techniques. It demonstrates that the radiochemical method, as compared to the ASTM Standard Method, is precise, sensitive and rapid. This method has been used to analyze variables which may have a significant effect on the moisture permeability of paint films. The variables analyzed include film thickness, vapor pressure, temperature, generic type of vehicle, type of pigment, pigment concentration, and moisture diffusion in liquid or vapor form.

This document has been approved for public release and sale; its distribution is unlimited.

Copies available at the Clearinghouse for Federal Scientific & Technical Information (CFSTI), Sills Building, 5285 Port Royal Road, Springfield, Va. 22151

CONTENTS

	page
INTRODUCTION	1
BACKGROUND	1
APPROACH	2
EXPERIMENTAL	3
Apparatus	3
Diffusion Cell	3
Vacuum System	4
Procedure	6
Comparison of Radiometric and ASTM Test Methods	8
ANALYSIS OF VARIABLES AFFECTING PERMEABILITY OF PAINT FILMS	10
Effect of Thickness	10
Effect of Vapor Pressure	12
Effect of Temperature	15
Effect of Vehicle Composition	17
Effect of Pigment Concentration	18
Effect of Pigment Type	22
Effect of Moisture in Liquid Form and Vapor Form	25
SUMMARY	28
CONCLUSIONS	28
RECOMMENDATION	29
REFERENCES	30

INTRODUCTION

The Naval Facilities Engineering Command is responsible for the operation and maintenance of the many structures throughout the Naval Shore Establishment. These structures are subject to corrosion and deterioration from their natural environment and must be protected to minimize this deterioration and resultant costly repairs. Corrosion of metal costs U. S. military and civilian establishments in excess of 10 billion dollars annually.[1]

It is a well-established[2-6] and recognized fact that metal corrosion is electrochemical in nature, and detailed discussion is not necessary on this basic subject. In short, metal must be in contact with or immersed in water in order for corrosion to take place. The rate of the corrosion is dependent on the amount of dissolved oxygen available at the cathode. Since practically all electrochemical or common corrosion processes require the presence of water or water vapor, it should be possible to prevent or reduce corrosion by isolating metallic surfaces from water or water vapor.

Painting is the most widely used method for minimizing corrosion of large surface areas because of the simplicity of application and the comparatively low initial cost. Paints, however, have inherent deficiencies that allow water or other corrosive materials to penetrate the film to the substrate in varying degrees and eventually affect the protection provided by coatings. Therefore a study of the mechanism of water vapor permeation through paint films should help in understanding the limitations of such films, aid in improving them, and thus contribute to corrosion control.

BACKGROUND

Though the permeability of paints and other coatings to moisture has been studied,[7-12] the resulting data have not been adequate. This is largely because of the difficulty of measuring the quantity of water vapor diffusing through a film. The quantity is usually too minute to be measured accurately by chemical means, and the diffused vapor is not in a form which is readily determinable by the usual analytical methods. For example, the

method given in the American Society for Testing Materials (ASTM) Standard D1653-62T involves the determination of the weight lost when a quantity of water passes through a sample film under a certain set of conditions; but the method does not allow for such factors as the effect of varying temperature and pressure on vapor diffusion, and is therefore not as accurate or as versatile as desired. Furthermore, the ASTM method does not yield results in a reasonably short time because the weight of water vapor passing a membrane is too small to be measured in a period of less than a week. Even after such a period, the accuracy is less than desired.

Accordingly, a study was undertaken by the Naval Civil Engineering Laboratory (NCEL) to develop a new and improved method for measuring water vapor diffusion through paint films. The method was to be based on the use of tritiated water as a tracer. With such a technique, the permeability coefficient of widely differing coatings could be measured, it was believed, with a high degree of speed and accuracy.

APPROACH

The mechanism of vapor diffusion through an organic membrane such as paint is not a simple diffusion process as it is in a porous material. According to accepted theory,[7,13] permeation through an organic membrane occurs in three stages: (1) condensation of water vapor on and dissolving into one side of the film, (2) diffusion through the film, and (3) evaporation from the other side.

Because of the transfer mechanism of solution and diffusion, the permeability of the vapor is a product of its diffusion coefficient through the membrane and its solubility in the membrane. This is mathematically expressed as[7,13]

$$P_r = D S \qquad (1)$$

where P_r = Permeability (gm-cm/cm^2/hr/cmHg)

D = Diffusion coefficient (cm^2/hr)

S = Solubility of penetrant (gm/cm^3/cmHg)

The driving force for water vapor diffusion through the membrane is the vapor pressure difference between its two faces. The amount of water vapor, Q, diffusing through a given membrane at a given temperature is

dependent upon the effective area, **A**, the thickness, **d**, the vapor pressure differential between the faces of the membrane, Δp, and the time, **t**, according to the following one-dimensional steady-state equation[7,14] from Fick's Law:

$$Q = \frac{P_r}{d} A t \Delta p \qquad (2)$$

The permeability, P_r, which characterizes the water vapor transmission resistance of the membrane under consideration, is dependent upon the nature of both membrane and the permeating vapor. It is interesting to note that Equation 2 is completely analogous[13] to the basic heat conduction equation,

$$Q = \frac{K}{d} A t \Delta T \qquad (3)$$

in which permeability, P_r, is analogous to conductivity, **K**, and the partial pressure difference, Δp, is analogous to the temperature difference, ΔT.

The NCEL studies were aimed not only at developing a new radiometric method but at investigating the basic factors affecting water vapor transmission. The validity of the linear dependence of the amount of diffusing water vapor, **Q**, on vapor pressure and inverse linear dependence on membrane thickness were to be examined. The validity of the independence of permeability, P_r, from varied vapor pressures, thicknesses, and temperature of the film were also to be investigated.

EXPERIMENTAL

Apparatus

Diffusion Cell. A diffusion cell was designed and is shown in Figure 1. The cell was made of plexiglass and pyrex tubing. Each half consisted of a water mantle (C) and an exposure chamber (D). The water mantles maintained the desired temperature in the chambers and in the sample membrane during experiments. The sample membrane was placed between two fine copper gauzes (F). The gauzes gave even support to the membrane while protecting it from damage which might occur by a sudden change in pressure between the two chambers. An O-ring (G) and a rubber gasket (H) were used for sealing the two halves of the cell. By tightening a screw with moderate fingertight force, a high-vacuum seal was obtained.

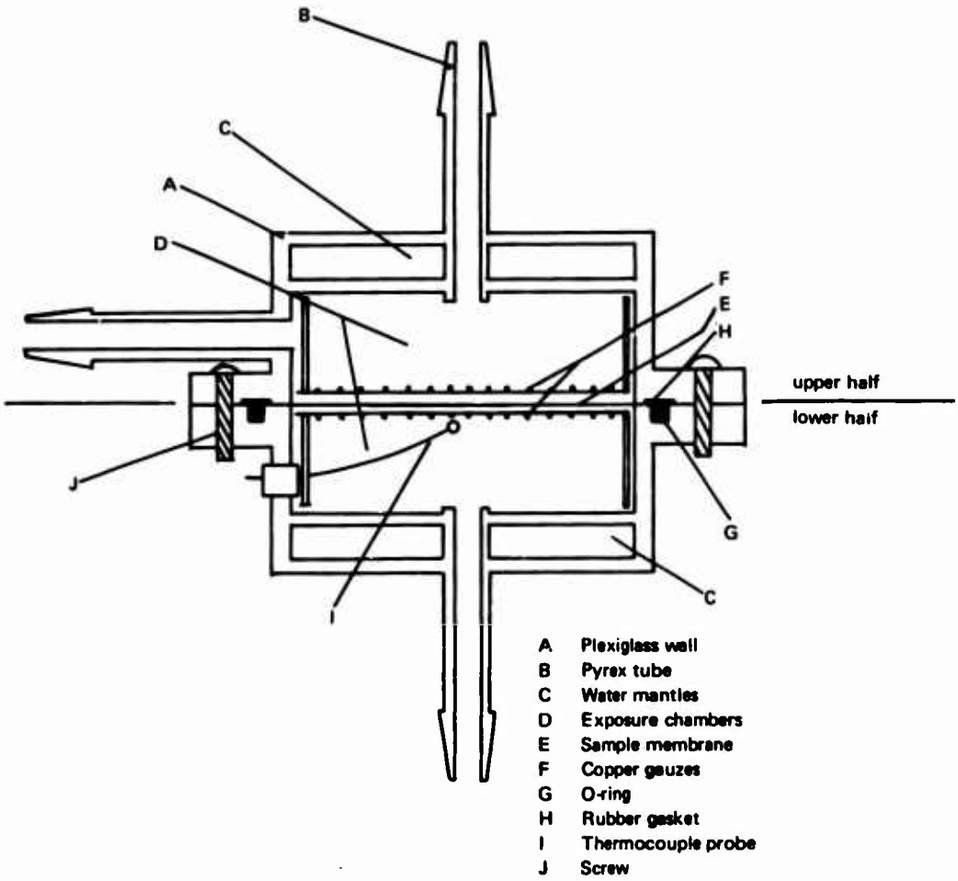

Figure 1. Diffusion cell.

The lower chamber was provided with a thermocouple probe (I) that enabled an experimenter to monitor the temperature of the membrane directly rather than relying on the water mantle temperature. When the cell was assembled, the exposed portion of the sample membrane was 20 cm^2.

Vacuum System. The next step was to construct a system (Figure 2) that would make it possible to maintain a known constant pressure of water vapor on the surface of the membrane. Otherwise the permeation rate would vary and Equation 2 could not be used.

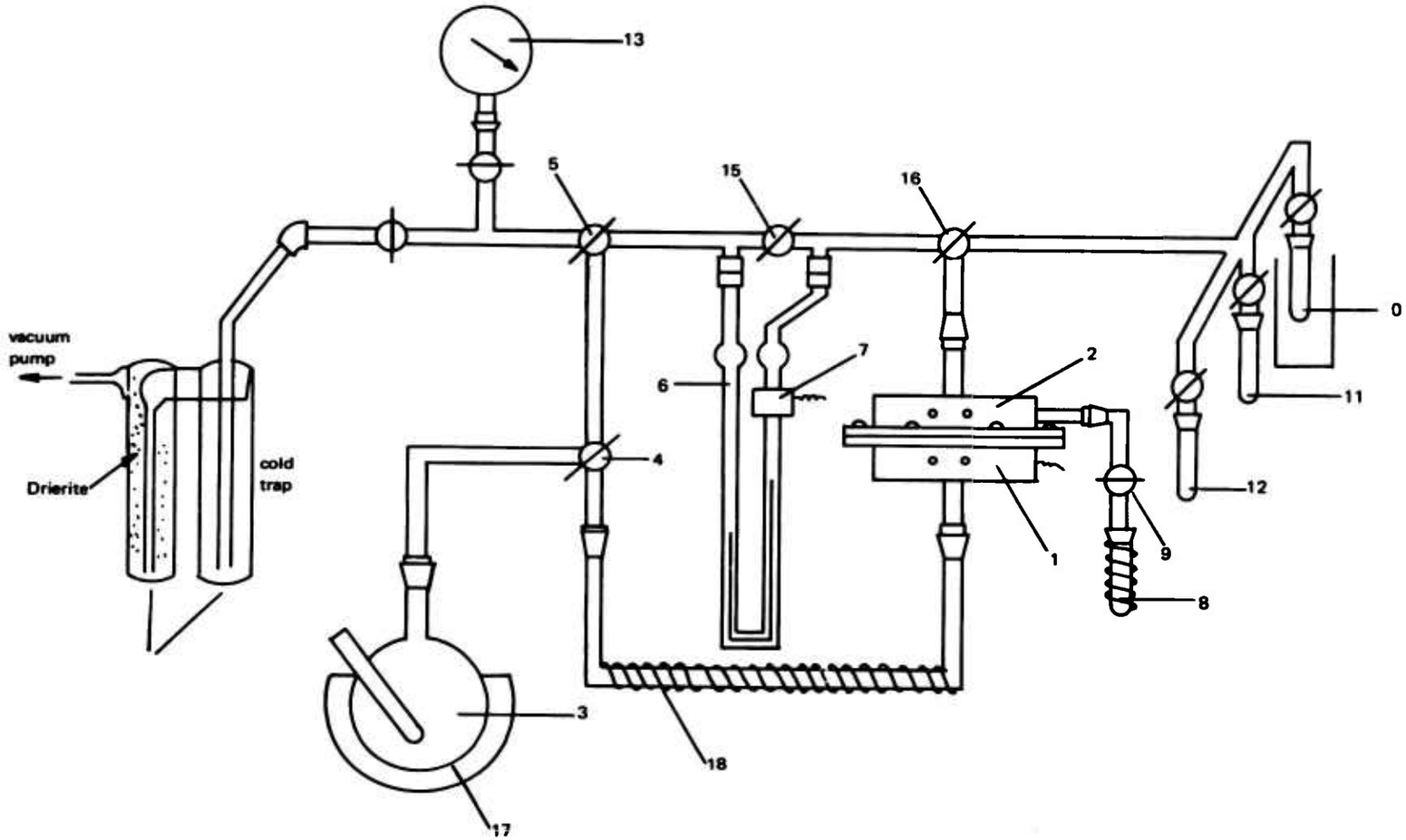

Figure 2. Permeation apparatus for vapor diffusion.

The vacuum system was fabricated from high-vacuum grade pyrex. A vessel (3), designed to contain tritiated water, was connected through a T-shaped stopcock (4) to the lower half of the diffusion cell (1) and to one arm of a mercury manometer (6). The other arm of the manometer was connected to the upper half of the diffusion cell (2). The manometer thus provided direct reading of vapor pressure differential between the two faces of the sample membrane. Furthermore, the manometer was equipped with a temperature-regulating device (7) connected to the heater for the tritiated water in the vessel (3) to control the vapor pressure within the system. Coiled nichrome wire (18) prevented condensation of tritiated water vapor within the pyrex tubing by maintaining the temperature above the dew point at all times.

The vacuum system was designed in such a way that the diffusion cell, the manometer, or other elements could be disconnected from the assembly by the use of stopcocks, as shown in Figure 2.

Procedure

Unpigmented alkyd membranes of varying thicknesses were studied in the apparatus. The diffusion cell containing the sample membrane was mounted in each case on the vacuum system as shown in Figure 2. Tritiated water of known activity (approximately 15 microcuries per ml) was placed in the container vessel (3). The entire system was evacuated prior to the experiment.

Tritiated water vapor from the container vessel (3) was admitted into the manometer (6) through the T-shaped stopcock (4) (Figure 2). As soon as the desired vapor pressure was obtained as indicated by the manometer (6), the tritiated vapor was admitted into the lower half of the diffusion cell (1) through the same stopcock (4). This was the initial time ($t = 0$) of the experiment.

The stopcock of the receiving tube (10, 11, or 12), which was immersed in coolant, was then opened to condense and freeze out any tritiated water vapor which passed through the sample membrane. Freezing of the receiving tube insured a constant pressure difference between the two faces of the membrane, since any vapor which passed through the membrane would be condensed and frozen in the receiving tube.

After a predetermined length of time between 1 and 2 hours, the vessel (3) was isolated from the rest of the system by turning the T-shaped stopcock (4); that time was recorded as the end of the experiment.

Vapor from the warmed absolute alcohol in tube (8) was then released into the upper half (2) of the diffusion cell to purge it of any residual tritiated water vapor, the vapor being carried to and condensed in the receiving tube.

The receiving tube containing the condensed tritiated water vapor was then removed from the vacuum system. The activity of the water vapor was counted by a liquid scintillation spectrometer. The amount of vapor that diffused through the sample membrane was used to calculate the diffusion rate, **R**, in mg/cm^2/hr and the permeability constant, $\mathbf{P_r}$, for the membrane in mg-mm/cm^2/hr/cmHg by means of the following formulas:

$$R = \frac{N\,100}{a A t k} \tag{4}$$

$$P_r = \frac{N d\,100}{a k A t \Delta p} \tag{5}$$

where **N** = Rate (counts/min)

a = Specific activity of tritiated water (counts/min/mg)

A = Effective area of sample membrane (cm^2)

t = Exposed time (hours)

k = Efficiency of scintillation counter (%)

d = Thickness of sample membrane (mm)

Δp = Vapor pressure difference between the two faces of the sample membrane (cmHg)

In order to reduce the random error of counting to less than 1% at the 95% probability level, each sample was counted to register 40,000 or more counts per measurement. A minimum of five condensates was collected for analysis after a steady rate of diffusion was attained

Counting efficiency, **k**, of the liquid scintillation counter was determined by applying the channel ratio method described by E. T. Buch.[14]

Processing of the results was greatly simplified by use of computer techniques. The liquid scintillation spectrometer was loaded with up to 100 samples, and each sample was counted as many times as described. The number of counts from each channel was automatically put on punch cards. The punched cards were fed into the computer along with other essential data The computer printed out in tabular form the counting rate, channel ratio, counting efficiency, diffusion rate, and the permeability constant of each sample.

Comparison of Radiometric and ASTM Test Method

The water vapor diffusion rate obtained by the new method was compared with that obtained with the same films using the ASTM Standard Method (D1653-62). The Standard Method employs a permeability cup that consists of two parts a shallow flanged cup and a flat ring matching the flange on the cup. Water is poured into the cup, and the film under test is held tightly between the cup and the ring by means of clamps.

The cup, so assembled, was placed in a desiccator and weighed every 24 hours for a period of 1 week. Phosphorous pentoxide was used as the desiccant. The desiccator was placed in a well-ventilated room where the temperature was maintained between 70° and 85°F. The diffusion rate of water vapor passing through the film was determined from the weight-loss rate.

Since the amount of moisture diffusing through a film is affected by the thickness of the film, as previously noted, and since it is very difficult if not impossible to produce films of exactly the same thickness, the films used in the ASTM Standard Method test were first used in the radiochemical experiments.

A comparison of the diffusion rates obtained by the radiochemical method and by the ASTM Standard Method is given in Table 1. The coefficients of variation, **Cv**, obtained by the ASTM Standard Method were considerably larger than those obtained by the radiochemical method.

The greater precision of the radiochemical method was determined by the **F**-test. The **F**-test is a statistical measure used to compare the precision of two sets of measurements by taking the ratio of two variances—the variance obtained by using the radiochemical method over the variance obtained by using the ASTM Standard Method. When the ratio of the variances exceeds the critical value of **F**, which is obtained from the statistical table **F**, it implies that there is indeed a significant difference in precision between the two systems.

In the NCEL experiments, the critical value of significance, **F**, at the 95% and 99.9% levels was 3.37 and 5.30, respectively. The **F**-ratio obtained, 19.78, greatly exceeded the above two critical values. This indicated that the NCEL radiochemical method was considerably more precise than the ASTM Standard Method.

The sensitivity of the measuring system employed in the radiochemical method can be increased to measure as low as 1 μg or less, whereas the analytical balance used in the ASTM Standard Method is accurate only to ±0.1 mg

Table 1. Analysis of Water Vapor Diffusion Rate Obtained by Radiochemical Method and by ASTM Standard Method

Alkyd Film Thickness[a] (mil)	Diffusion Rate[b] ($\mu g/cm^2/hr$)		Standard Deviation		Coefficient of Variation, Cv (%)[c]	
	Radiochemical Method	ASTM Standard Method	Radiochemical Method	ASTM Standard Method	Radiochemical Method	ASTM Standard Method
0.9	358.30 ±17.94	380.38 ±41.91	14.43	33.71	4.02	8.86
1.9	197.33 ±6.55	196.32 ±20.35	5.27	16.37	2.67	8.32
2.7	151.69 ±14.15	136.80 ±14.57	11.38	11.72	7.50	8.56
3.5	102.58 ±4.83	132.48 ±98.26	3.89	79.03	3.79	59.66[d]

[a] Unpigmented alkyd film (TT-R-266, Type II).

[b] At 95% confidence level.

[c] A measure of relative dispersion about the sample mean.

[d] Did not attain a steady state of flow for 3 days.

Results are more rapidly attainable by the radiochemical method. Once a steady state of flow is attained, the diffusion rate can be measured in a shorter time (1 to 2 hours) during a period of 1 day; the ASTM Standard Method requires readings at 24-hour intervals during a period of 1 week.

The new radiochemical method permits the separate control of various parameters, whereas the ASTM Method does not. With the radiochemical apparatus, precisely monitorable vapor pressure differential and temperature provide the means of examining separately the effects of vapor pressure and temperature on the permeability of films; it is not possible to monitor temperature by the ASTM Standard Method without affecting vapor pressure.

Further details of the sample preparation, the computer program, the AEC regulation, and the reliability of the counting system are described in Reference 15.

ANALYSIS OF VARIABLES AFFECTING PERMEABILITY OF PAINT FILMS

Effect of Thickness

Equation 2 states that the amount of water, **Q**, diffusing through a permeable membrane at a given temperature is inversely proportional to thickness **d** and that the permeability constant, P_r, is independent of thickness **d**. This inverse linear dependence of **Q** on thickness **d** was studied by testing a series of unpigmented films (alkyd TT-R-266 Type II and polyamide cured epoxy) of different thicknesses. The films were prepared, and the diffusion rates and permeability constants, P_r, were determined as described earlier. All sample films were subjected to a vapor pressure difference, Δp, of 2.0 cmHg at a temperature of 30°C during the measurements.

The rate of the moisture diffusing through the membrane increased inversely with the film thickness, **d**, in both types of films as shown in Table 2. The effect of the film thickness on the diffusion rate rapidly diminished as the film became very thick. The moisture diffusion rate was reduced to half as the epoxy film increased from 1 mil to 2 mils, whereas very little change in the diffusion rate was observed when the epoxy film was increased in thickness from 8.8 mils to 19.3 mils as shown in Figure 3. The data obtained from samples less than 1-mil thick were not reliable, no doubt because of difficulty in preparing such thin films without pin holes or other defects. Since only two generic types of film, alkyd and epoxy, were tested, it is not established here whether all other types of films would behave similarly, but it is a reasonable assumption that they would differ only in degree as suggested in Figure 3.

The average permeability constants of the alkyd and of the epoxy films were 4.208 ± 0.180 and 0.978 ± 0.062 μg-mm/cm^2/hr/cmHg, respectively, at the 95% confidence limit. This means that 19 times out of 20 the average permeability constant, P_r, will lie within the above range.

However, data in Table 2 show that the permeability constants, P_r, of the alkyd films fluctuated more than did those of the epoxy films. If the permeability constant, P_r, is independent of thickness, then the plot of the diffusion rate versus 1/**d** (inverse thickness) should be a straight line passing through the origin with a slope of P_r ($A \Delta p$), because area **A**, vapor pressure difference Δp, and temperature were maintained constant during the experiment. The plots of diffusion rate for progressively thinner alkyd films deviated from the expected straight line, as determined by step-wise linear regression analysis (STRAP), while plots of diffusion rate for the epoxy films were as expected a straight line passing through the origin (see Figure 3).

Table 2. Effect of Thickness on Permeability

(Vapor pressure, 2.0 cmHg; temperature, 30°C.)

Film Thickness		Diffusion Rate ($\mu g/cm^2/hr$)	Permeability Constant (μg-mm/cm^2/hr/cmHg)
Microns	Mils		
Alkyd Film			
350.5	13.8	24.21	4.288
238.8	9.4	35.55	4.244
114.3	4.5	67.29	3.617
101.6	4.0	79.72	3.841
88.9	3.5	102.58	5.488
68.5	2.7	151.68	5.105
48.2	1.9	197.33	4.756
35.5	1.4	236.99	4.213
25.4	1.0	265.42	3.344
22.8	0.9	358.36	4.095
		Avg	4.208
Epoxy Film			
490.2	19.3	5.17	1.269
223.5	8.8	6.14	0.686
101.6	4.0	22.68	1.152
50.8	2.0	35.89	0.911
25.4	1.0	73.73	0.936
		Avg	0.978

This indicates that the independence of the permeability constant from thickness is valid only for some types of films. Equation 1 states that the permeability constant, P_r, is a product of its diffusion coefficient, **D**, and the solubility, **S**, in the membrane. It follows that the independence of the permeability constant from thickness is no longer true if the film is made from materials that absorb much water and swell, or is hydrophilic in nature. This is demonstrated by the alkyd films which are more hydrophilic than the epoxy films.

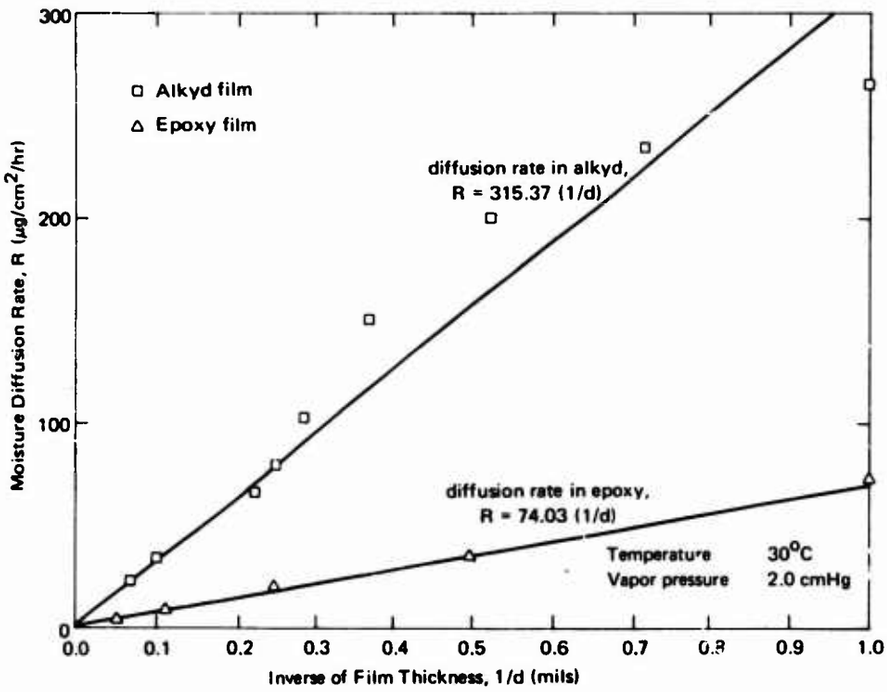

Figure 3. Effect of thickness on permeability.

Effect of Vapor Pressure

Equation 2 states that the amount of water, **Q**, diffusing through a membrane is directly proportional to the vapor pressure difference, Δp, and that the permeability constant, P_r, is independent of the vapor pressure difference, Δp. This linear dependence of **Q** on vapor pressure difference Δp was examined by subjecting two types of 2-mil-thick unpigmented films (alkyd and epoxy) to a series of vapor pressure differences, Δp, at a constant temperature.

The results of the diffusion rate and the permeability constant are given in Table 3. They show that the diffusion rate of both films, alkyd and epoxy, increased with vapor pressure difference, but the diffusion rate increased much more rapidly as the vapor pressure difference increased as shown in Figure 4.

Table 3. Effect of Vapor Pressure on Permeability

(Film thickness, 2.0 mil; temperature, 30°C.)

Vapor Pressure (cmHg)	Diffusion Rate (μg/cm^2/hr)	Permeability Constant (μg-mm/cm^2/hr/cmHg)
Alkyd Film		
2.0	114.74	2.690
2.5	176.83	3.383
3.0	205.52	3.480
3.5	300.48	4.361
		Avg 3.478
Epoxy Film		
2.0	35.89	0.911
3.0	55.42	0.938
4.0	96.32	1.223
		Avg 1.024

Here again, as mentioned in the preceding section, it is not established that all other generic types of films will behave similarly, since only two types of clear films (alkyd and epoxy) were tested. However, it can be reasonably assumed that most other types of paint films will behave similarly. It would be desirable, if time permited, to use many other different generic types of films in this type of study, since so many different types of coatings have been developed in recent years.

The average permeability constant, P_r, of the alkyd and epoxy films was 3.478±0.333 and 1.024±0.110 μg-mm/cm^2/hr/cmHg, respectively, at the 95% confidence limits.

Examination of Table 3 reveals that the permeability constant of each film, alkyd and epoxy, seems to increase with an increase in vapor pressure difference. If the permeability constant is independent of vapor pressure change as stated in Equation 2, then a plot of the diffusion rate versus vapor pressure difference would be a straight line passing through the origin with a slope of $(P_r A)/d$. However, the plot for the alkyd films, determined by STRAP, shows considerable deviation from a straight line as the vapor pressure difference increased, whereas the plot for the epoxy films deviated slightly.

This indicates that the permeability constant of the alkyd film is not independent of vapor pressure difference. The permeability constant of the epoxy film was also affected by vapor pressure difference but to a lesser degree as shown in Figure 4.

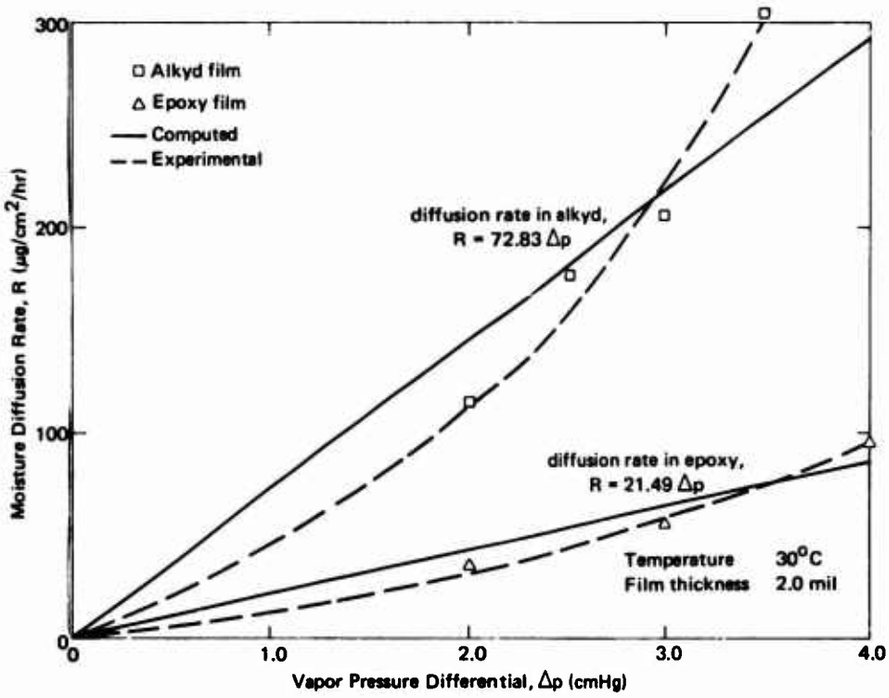

Figure 4. Effect of vapor pressure differential on permeability.

A statistical analysis, **F**-test, was performed to ascertain whether the varying values of the permeability constant were due to the standard deviation of individual measurements or due to the existence of true differences among the permeability constants. For 3 and 16 degrees of freedom, the critical **F**-value at the 0.01 level was 5.29 for the alkyd, and for the epoxy film for 2 and 12 degrees of freedom, the critical **F**-value at the 0.01 level was 6.03. The **F**-ratios obtained, 14.82 and 12.04 for alkyd and epoxy respectively, exceeded their critical values. This indicates that the fluctuations among the permeability constants are not solely due to the standard deviation of individual measurements but due to a true difference among the permeability constants. Hence the permeability constant of both films, alkyd and epoxy, indeed increased as the vapor pressure increased.

The deviation from independency of the permeability constant from vapor pressure becomes more apparent with films which are more hydrophilic, as shown by the greater deviation of the alkyd film, which is more hydrophilic than the eopxy film. This phenomena may be explained by Equation 1 which states that the permeability constant, P_r, is a product of the diffusion constant, **D**, and solubility **S**, whereas solubility **S** is a function of **kP** as stated in Equation 6 of Henry's Law[7,10,16]

$$S = kP \tag{6}$$

where **k** = Solubility constant

P = Partial pressure of the penetrant

Thus, if solubility **S** is pressure dependent, then the permeability constant, P_r, will also be pressure dependent as the results of this study appear to corroborate.

Effect of Temperature

The effect of temperature on the diffusion rate and the permeability constant of the alkyd and epoxy films, 1.4- and 2.0-mil thick respectively, were tested by subjecting the films to a series of different temperatures while maintaining vapor pressure constant at 3.0 cmHg. The results are given in Table 4.

Within the range of temperatures tested, the diffusion rate of the alkyd films appeared unaffected while that for the epoxy film increased slightly with temperature as shown in Figure 5. The average diffusion rate of the alkyd film was 323.29 ± 4.99 $\mu g/cm^2/hr$ at the 95% confidence limits. The coefficient of variation was 5.54% which indicates that the effect of the temperature on the diffusion rate was negligible. The average diffusion rate of the epoxy film was 47.00 ± 4.56 $\mu g/cm^2/hr$ at the 95% confidence limits. The coefficient of variation was 23.54%, which indicates there is a measurable dependence of diffusion rate on temperature for the epoxy film.

The average permeability constant, P_r, of the alkyd film was 4.186 ± 0.142 $\mu g\text{-}mm/cm^2/hr/cmHg$ at the 95% confidence limits. The coefficient of variation was 9.02%, which indicates that the permeability constant of the alkyd film was independent of the temperature change. The average permeability constant, P_r, of the epoxy film was 1.183 ± 0.115 $\mu g\text{-}mm/cm^2/hr/cmHg$ at the 95% confidence limits. The coefficient of variation was 22.87%, which indicates a somewhat larger fluctuation of the permeability constant. The constant appeared to increase with an increase in temperature as seen in Table 4.

Table 4. Effect of Temperature on Permeability

(Vapor pressure, 3.0 cmHg.)

Temperature (°C)	Diffusion Rate		Permeability Constant	
	μg/cm²/hr	Cv (%)	μg-mm/cm²/hr/cmHg	Cv (%)
1.4-Mil-Thick Alkyd Film				
27	229.25		4.076	
30	230.15		4.252	
35	238.86		4.247	
40	230.49		4.133	
45	217.02		3.853	
50	237.75		4.227	
	Avg 232.29	5.54	Avg 4.186	9.02
2.0-Mil-Thick Epoxy Film				
22	39.88		1.136	
25	42.43		1.078	
30	35.89		0.938	
40	54.35		1.313	
48	52.54		1.464	
	Avg 47.00	23.54	Avg 1.183	22.87

The results of the above experiments differ from those of other researchers[17] who have stated that the permeability as much as doubled for a 10°C rise in temperature. Since the permeability, P_r, is proportional to the product of solubility, **S**, and the diffusion constant, **D**, as stated earlier in Equation 1, the effect of temperature on permeability is presumably two-fold. The first effect is upon the solubility, **S**. During the diffusion process, water vapor first condenses on the surface of the membrane as part of the solution process. Since the condensation process of the water vapor is exothermic, the solubility of water in the polymer at the constant vapor pressure should decrease as temperature increases. The second effect of temperature is on the diffusion constant, **D**. Since the diffusion is an activated process,[7,10,17] the diffusion rate of water in the polymer increases as temperature increases. The trend of these two parameters to vary in opposite directions leads to an anomalous and puzzling variation of the permeability

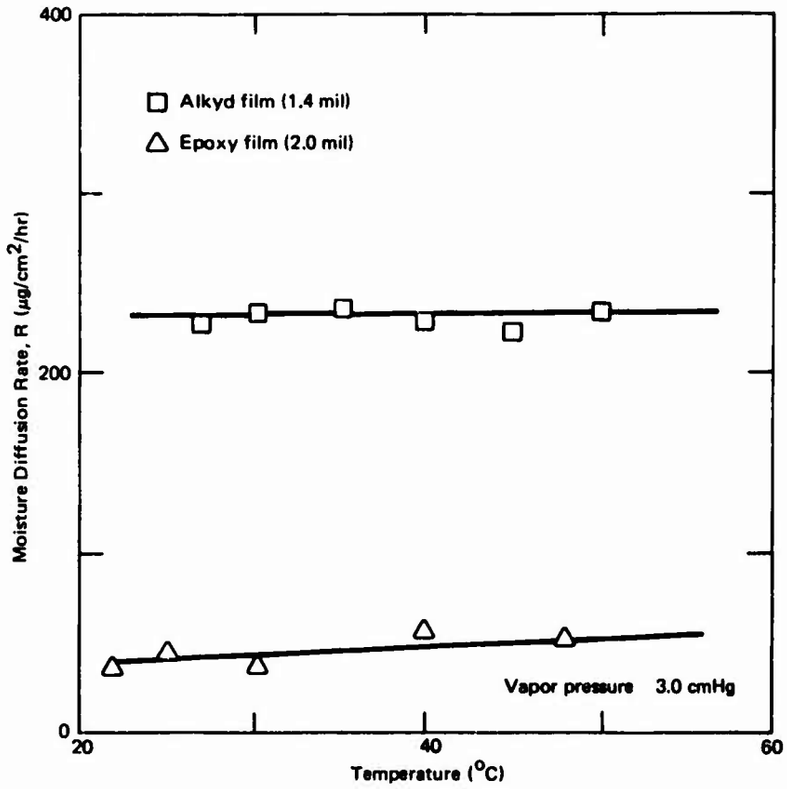

Figure 5. Effect of temperature on permeability.

with temperature. However, as the temperature is raised further, the rate of increase of the diffusion constant, **D**, becomes greater than the rate of decrease of solubility, **S**,[10] and, as a result, the permeability begins to increase with an increase in temperature, as this study appears to corroborate.

Effect of Vehicle Composition

A number of compositional and structural variables of polymers affect their permeabilities, diffusivities, and solubilities. The most obvious compositional variable is the generic type of the polymer.

Unpigmented clear films were prepared from six different generic types of vehicles obtained from a local supplier. Their permeabilities were determined by the usual method at a temperature of 30°C and a vapor pressure of 2.0 cmHg.

The results show the permeability of each film to be characteristic of its vehicle, each having a different value for the permeability constant (see Table 5 and Figure 6). Of the six vehicles examined, the alkyd vehicle produced the most permeable film while the epoxy material produced the least permeable film. The permeability of the alkyd films modified with silicone and styrene were reduced considerably in comparison to the alkyd film, as shown in Figure 6. This indicates that the introduction of other functional groups into the polymeric structure changes either the diffusion coefficient, **D**, or the solubility of penetrant, **S**, in Equation 1, or both, and therefore affects the permeability constant, P_r, of the membranes. The overall results indicate that the permeability of polymer films to moisture is highly dependent on the generic type of the film.

Table 5. Effect of Chemical Composition on Permeability of Unpigmented Films

(Vapor pressure, 2.0 cmHg; temperature, 30°C.)

Polymer Membrane	Film Thickness		Diffusion Rate ($\mu g/cm^2/hr$)	Permeability Constant ($\mu g\text{-}mm/cm^2/hr/cmHg$)
	Microns	Mils		
Alkyd resin	68.5	2.7	151.69	5.105
Silicone alkyd	63.5	2.5	103.15	3.274
Styrenated alkyd	60.9	2.4	92.32	2.812
Epoxy ester	66.0	2.6	81.14	2.678
Polyurethane	81.2	3.2	54.56	2.044
Epoxy resin	50.8	2.0	35.89	0.911

Effect of Pigment Concentration

The addition of pigment to a coating vehicle generally reduces the permeability of the resultant film in two ways First the pigment reduces the available cross section per unit area for water molecules to permeate into the film. Second the pigment increases the length of the path through which the water molecule must diffuse.

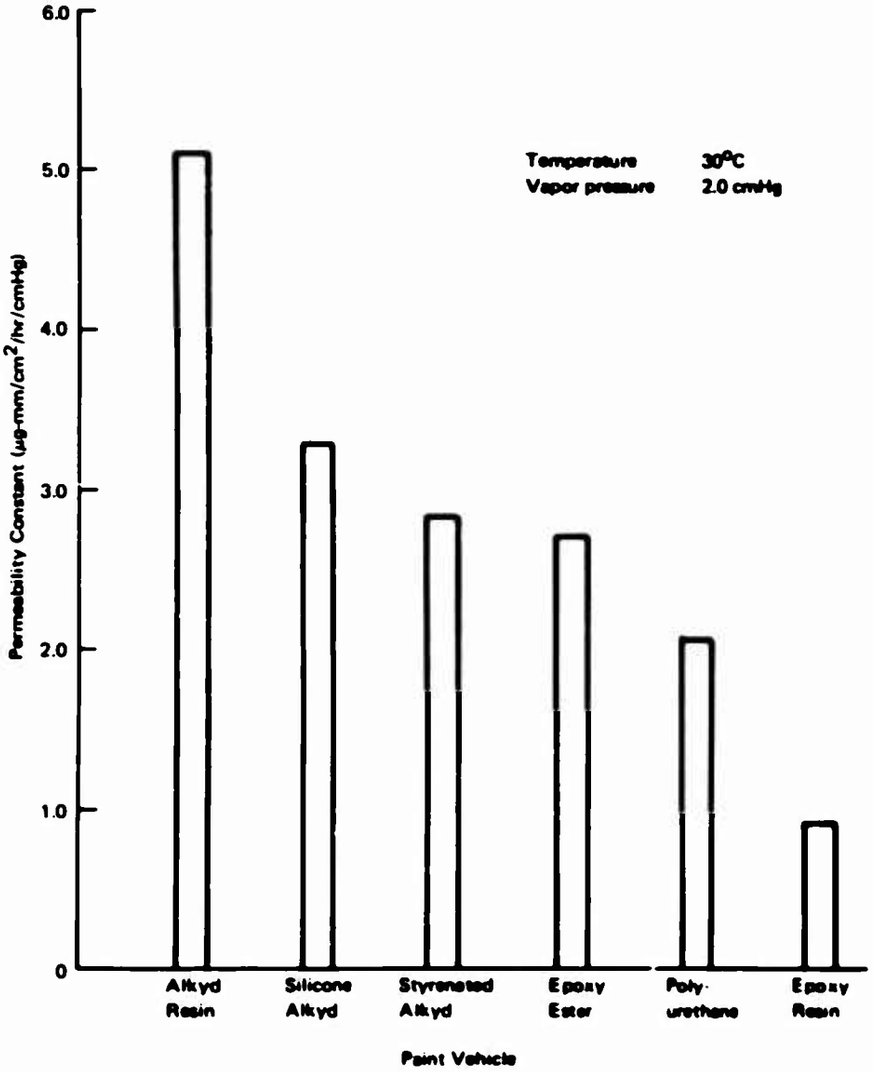

Figure 6. Permeability constant of clear unpigmented films.

The effect of pigment concentration on the permeability of paint films was investigated by determining permeability constants for a series of pigmented films (epoxy and alkyd) which contained varying concentrations of two different pigments.

Alkyd films, each pigmented with varying concentrations of red lead (0, 25, 40, 50, 65, 75, and 85% by weight), and epoxy films, each pigmented with varying concentrations of zinc yellow (0, 25, 50, and 65% by weight), were prepared for this study. The alkyd vehicle, including a

thinner and drier, was mixed and ground with each concentration of pigment in a laboratory-type ball mill until a fineness of grind between 6 and 7 was obtained. The epoxy vehicle, together with a thinner and a pigment of known concentration, was mixed in the same manner using a laboratory-type ball mill. The proper amount of hardner was added to the epoxy vehicle before drawing down the film on a photographic paper. The pigmented free films were prepared and the permeability constants were determined in the usual manner. The temperature and vapor pressure were maintained at 30°C and 2.0 cmHg, respectively, during the experiments.

The results in Table 6 and Figure 7 clearly show that the permeability constants of the alkyd films decreased as the pigment concentration increased. The results with the epoxy films, however, showed no decrease in the permeability constant with pigment concentration. On the contrary, the permeability constant of the pigmented epoxy films increased somewhat from those of the unpigmented epoxy films (see Figure 7).

Table 6. Effect of Pigment Concentration on Permeability of Films

(Temperature, 30°C, vapor pressure, 2.0 cmHg.)

Pigment (%)	Film Thickness		Diffusion Rate ($\mu g/cm^2/hr$)	Permeability Constant ($\mu g \cdot mm/cm^2/hr/cmHg$)
	Microns	Mils		
Alkyd Film With Red Lead				
0	68.5	2.7	151.68	5.105
25	58.4	2.3	137.10	3.995
40	63.5	2.5	108.08	3.433
50	60.9	2.4	111.66	3.422
65	68.5	2.7	77.91	2.521
75	58.4	2.3	80.02	2.337
85	76.2	3.0	40.53	1.544
Epoxy Film With Zinc Yellow				
0	142.2	5.6	11.92	0.617
25	137.1	5.4	14.99	1.125
50	177.8	7.0	12.87	1.144
65	121.9	4.8	17.49	1.060

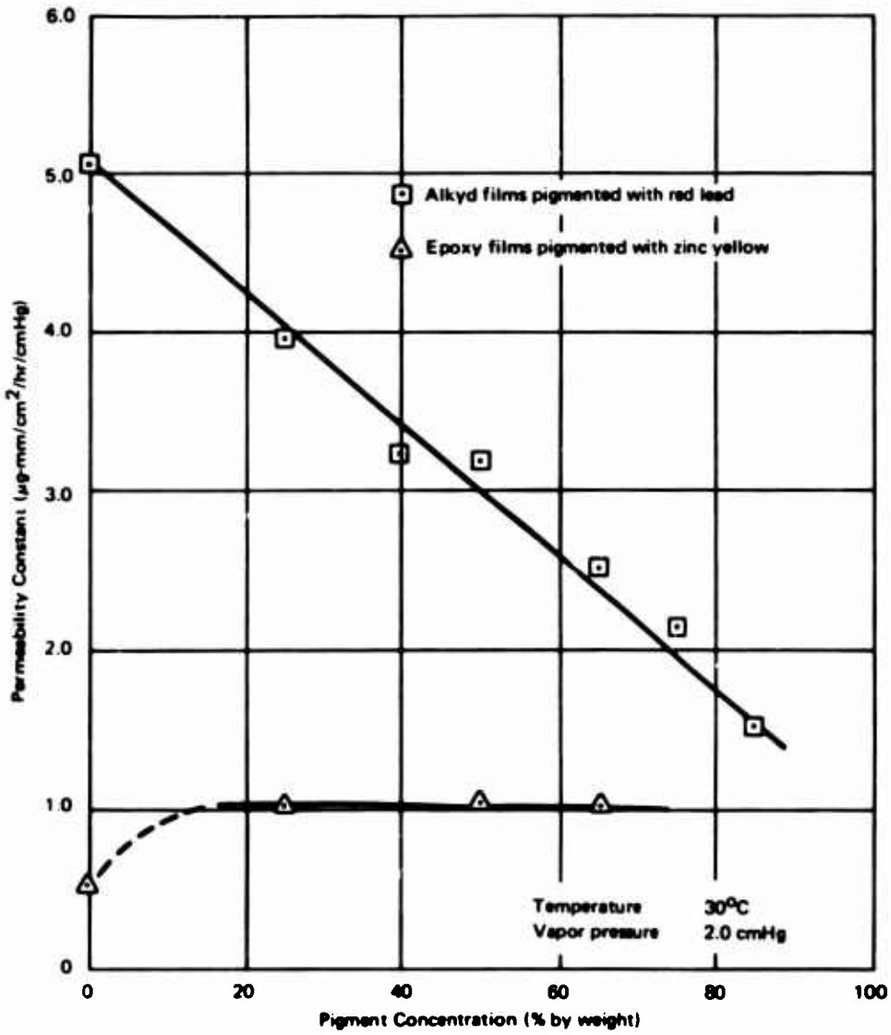

Figure 7. Effect of pigment concentration on the permeability of coating films.

The results of the migration studies for alkyd and epoxy films appear to indicate that increasing the pigment concentration effectively decreases the permeability of films which are more hydrophilic in nature (such as the alkyd films), while increasing the pigment concentration does not reduce the permeability of vehicles which are more hydrophobic in nature (such as epoxy films).

Most of the pigments are crystaline and dense but vary in water sensitivity. Polymers containing such hydrophobic (non-polar) pigments tend to lower the permeability below that of the unpigmented polymer. However, there are a number of inorganic pigments which are rather polar and hydrophilic in nature. Hydrophilic pigments tend to be incompatible or form agglomerates when mixed with hydrophobic polymers.[10] These pigments tend to adsorb water molecules at the pigment—vehicle interface when mixed with the polymer vehicle. Under these conditions, adsorbed water will migrate more rapidly through this interfacial path by surface diffusion.[7] The permeability of these pigmented films will therefore be much greater than the permeability through identical unpigmented films. Epoxy resins generally do not wet pigments as readily as alkyd resins. As a result, it might be predicted that the permeability of pigmented epoxy films would be greater than that of the unpigmented films, as this experiment shows. The addition of small quantities of dispersing surfactants or wetting agents could decrease the permeability and improve the durability of a paint film, when the addition of pigment alone causes an increase in the water permeability.[10]

Effect of Pigment Type

The effect of various pigments on the permeability of paint films was analyzed by determining the permeability constant of pigmented films. Two types of vehicles, alkyd and epoxy, were mixed with one of the following pigments: red lead, zinc yellow, iron oxide, and titanium dioxide. Each vehicle was mixed with equal amounts by weight of pigment in a laboratory-type ball mill. The pigmented free films were prepared and permeability constants determined in the same manner as described in previous sections. The temperature and vapor pressure were maintained at 30°C and 2.0 cmHg, respectively.

The results show that the permeability of alkyd films to moisture was reduced considerably by all pigments compared to that of the unpigmented alkyd films. Some of the pigments, however, reduced the permeability constant more effectively than others, as shown in Figure 8. On the other hand, incorporation of pigments into epoxy films caused the water permeability of the film to increase slightly more than that of the unpigmented film. (See Table 7 and Figure 8.)

The results suggest that the pigment volume concentration is not the only factor affecting the permeability of films to moisture. If the permeability of films is a function of pigment volume concentration, then the zinc yellow pigment should form the least permeable films because it is the bulkiest pigment among those tested (see Table 8). However, the zinc yellow pigment

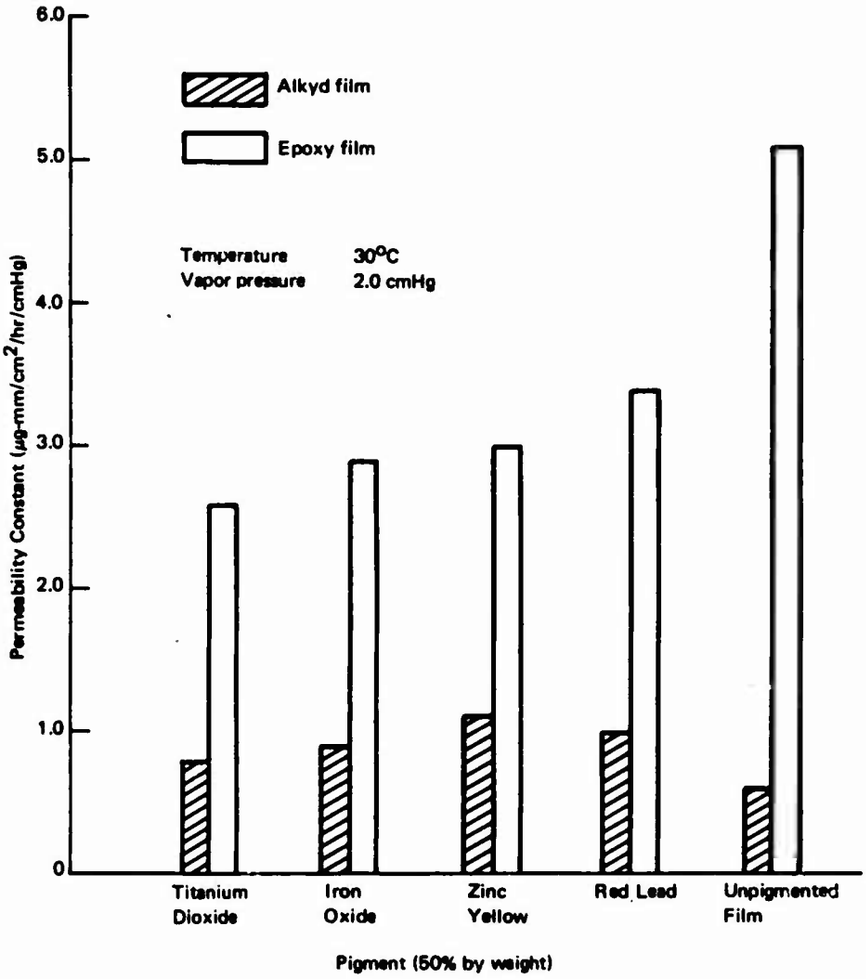

Figure 8. Effect of pigment type on permeability of alkyd and epoxy films.

did not form the least permeable film when compared to films containing other pigment. This was the case for both the epoxy and the alkyd resins, (see Figure 8). Table 8 shows that zinc yellow is the most water soluble pigment among the four pigments tested. Iron oxide was bulkier than titanium dioxide, yet titanium dioxide reduced the permeability of both resins much more effectively than did the iron oxide. Table 8, however, shows that the iron oxide is more soluble in water than the titanium dioxide. The red lead was the least soluble pigment in water. Thus, if all other parameters were the same, red lead should form the least permeable film for those pigments tested of the pigment–volume concentration is the same. The specific gravity of the red lead is nearly twice that of titanium dioxide.

Table 7. Effect of Pigment on the Permeability of Paint Films

(Temperature, 30°C; vapor pressure, 2.0 cmHg.)

Pigment[a]	Alkyd Film			Epoxy Film		
	Thickness (mils)	Diffusion Rate ($\mu g/cm^2/mm$)	Permeability Constant ($\mu g\text{-}mm/cm^2/hr/cmHg$)	Thickness (mils)	Diffusion Rate ($\mu g/cm^2/hr$)	Permeability Constant ($\mu g\text{-}mm/cm^2/hr/cmHg$)
Unpigmented	2.7	151.0	5.1	5.6	11.9	0.6
Red lead	2.4	111.0	3.4	5.2	14.6	1.0
Zinc yellow	2.6	92.4	3.0	7.0	12.8	1.1
Iron oxide	2.7	86.9	2.9	5.4	12.7	0.9
Titanium dioxide	2.5	83.0	2.6	2.7	23.9	0.8

[a] Pigment concentration, 50% by total weight of paint.

Table 8. Chemical and Physical Properties of Pigments

Pigment	Chemical Composition	Specific Gravity (gm/cm^3)	Bulking Value (lb/gal)	Volume[a] (gal/lb)	Solubility in water	Applicable Federal Specification Number
Red lead	Pb_3O_4	8.7	72.7	0.014 (4)	slight	TT-R-191d
Zinc yellow	$ZnCrO_4 \cdot K_2Cr_2O_7$	3.5	28.8	0.035 (1)	more than 10%	TT-p-465
Iron oxide	$Fe_2O_3 \cdot nH_2O$	3.9	32.5	0.031 (2)	less than 1%	TT-P-458a
Titanium dioxide	TiO_2	4.2	35.0	0.029 (3)	less than 0.2%	TT-P-442b

[a] Number in parentheses indicates relative rank in pigment volume.

Therefore, twice as much red lead is required by weight to give the same pigment volume concentration as for titanium dioxide. However, the curve in Figure 7 for a red lead pigmented alkyd indicates that only 60% by weight of red lead is required to give the same permeability constant as that found for an alkyd film pigmented with 50% by weight of titanium dioxide; that is, 2.6 μg-mm/cm^2/hr/cmHg (from Table 7). Thus, a red lead pigmented alkyd will give the same permeability constant at a lower pigment–volume concentration than a titanium dioxide pigmented alkyd.

The above results appear to indicate that the solubility or affinity of pigments for water is one of the main factors that affect the permeability of a pigmented film. If the pigment is water soluble or has a high water adsorption capacity, the pigment in the polymer can adsorb water molecules at the pigment–polymer interface as stated in the preceding section. If this occurs, hydrophilic pigments will form the path of least resistance for water diffusion in the bulk of the polymer–pigment composite. This will cause higher water permeability in polymers containing hydrophilic pigments compared to the polymers with hydrophobic pigments.

These results suggest that the permeability of pigmented film can not necessarily be predicted on the basis of pigment–volume concentration alone. The permeability of a given generic type of film to water may be increased or decreased significantly, depending on characteristics of the pigment such as size, solubility, chemical composition, compatibility with the particular polymer, and the degree of pigment dispersion in the polymer. Poor compatibility, poor dispersion, and the highly hydrophilic nature of certain pigments in polymers can lead to films of poor moisture resistance.

Effect of Moisture in Liquid Form and Vapor Form

Painted surfaces are often exposed to submerged environments, as well as to the atmosphere. Therefore, knowledge of the effect of moisture in both liquid and vapor forms on the permeability of coating films becomes of practical importance.

Measurements of moisture diffusion in the vapor form through a clear membrane using the radiometric method have already been described. The data are repeated here for purpose of comparison. The vapor pressure and temperature were maintained at 2.0 cmHg and 30°C, respectively.

Diffusion of moisture in the liquid form through a clear membrane was measured in a somewhat different manner. The diffusion cell was detached from the permeation apparatus (Figure 2) and the upper half of the cell was filled with tritiated water so that there was direct contact between the tritiated water and the sample membrane, as shown in Figure 9.

The experiments were conducted at ambient atmospheric pressure rather than in a vacuum as in the previous experiments. The temperature was maintained at 30°C. Any tritiated water which diffused through the sample membrane was condensed and frozen out in a receiving tube. The condensed moisture was mixed with ethyl alcohol and the scintillation liquid and activity counted by a liquid scintillation counter in the manner described in the experimental section.

The diffusion rate and permeability constant of the films were calculated by Equations 4 and 5. To calculate the permeability constant of moisture in the liquid form, the parameter, Δp, was eliminated from Equation 5. Because of this, the resulting permeability constant of the films by moisture in the liquid form is not strictly comparable with the results obtained from the experiments using water vapor.

The results are given in Table 9. They show that moisture in the vapor form premeated through a clear membrane at a much faster rate than water in the liquid form. These results may be explained by the fact that the large number of water molecules in the vapor form exist as unassociated molecules, H_2O, while water molecules in the liquid form probably exist mainly as larger associated molecules, $(H_2O)_n$. This large associated molecule has far more difficulty in passing through the interstices of a polymer membrane than the unassociated molecules of water in the vapor form. The diffused water molecules can be condensed with relative ease in a vacuum as compared to condensation under an atmospheric condition. This is presumably due to the fact that water molecules in a vacuum undergo fewer collisions with air molecules during their condensation. In a vacuum, the desired vapor pressure difference between the two faces of a sample film was established instantly, whereas a much longer time was required to obtain the desired vapor pressure difference under ambient atmospheric condition. The presence of air in the lower half of the cell thus inhibits the moisture diffusion, resulting in a lower permeability of moisture in the liquid form.

Table 9. Permeability of Moisture in Liquid and Vapor Forms Through Clear Alkyd Films

Moisture Form	Film Thickness (mils)	Temperature (°C)	Diffusion Rate ($\mu g/cm^2/hr$)	Permeability Constant
Liquid	4.9	30	13.25	1.649[b]
Vapor[a]	4.5	30	67.29	3.617[c]

[a] Tested at 2.0 cmHg vapor pressure.

[b] In μg-mm/cm^2/hr.

[c] In μg-mm/cm^2/hr/cmHg.

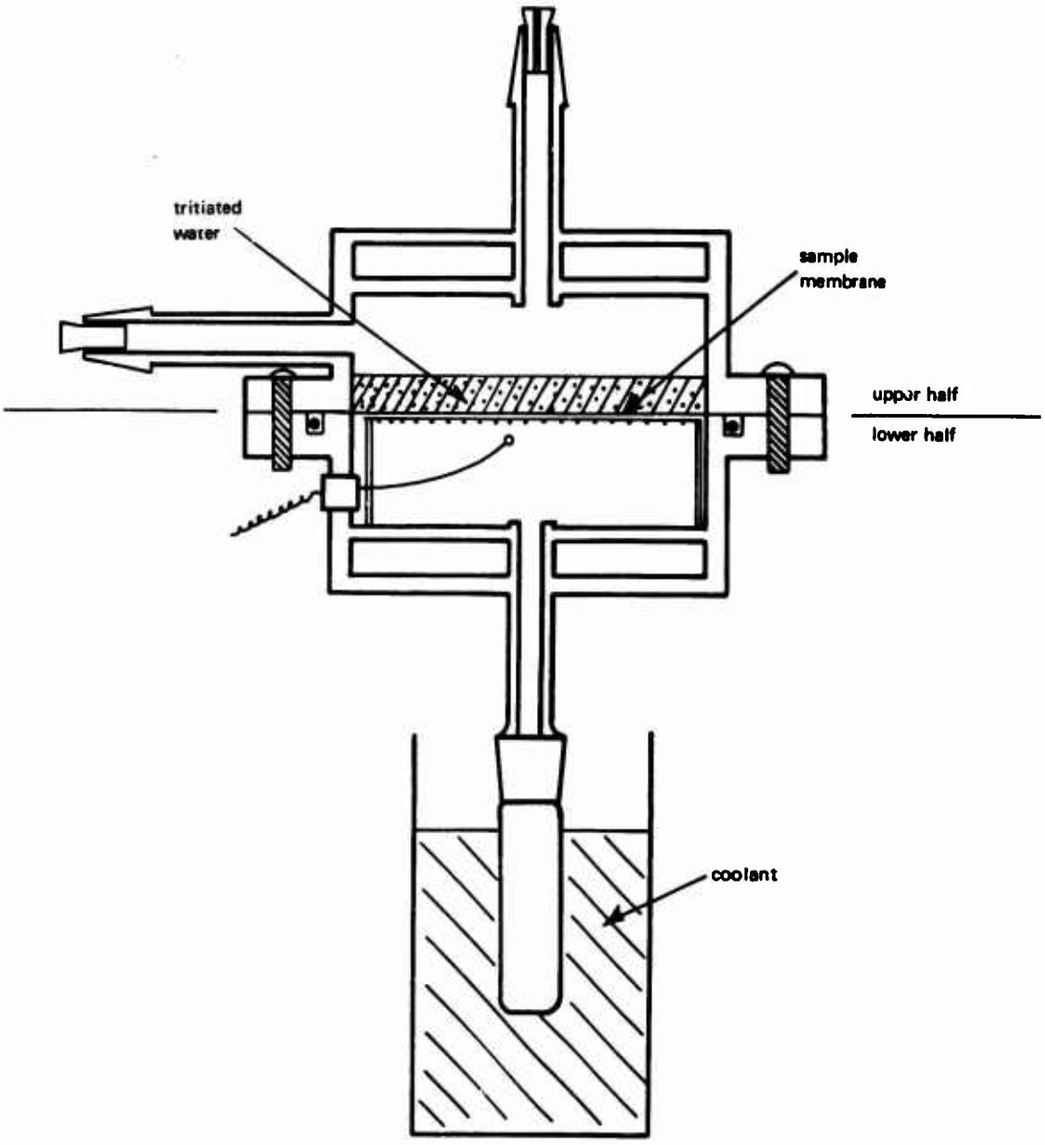

Figure 9. Diffusion cell for moisture in the liquid form.

SUMMARY

A method for measuring the permeability constant and the diffusion rate of water vapor through various polymer films by the radiochemical method has been described. It demonstrates that the radiochemical method, as compared to the ASTM Standard Method, is very sensitive, rapid, and precise. The diffusion rate, once a steady state of flow is attained, can be measured in shorter time intervals (1 to 2 hours) over 1 day, whereas the ASTM Standard Method requires readings at 24-hour intervals over 1 week. The sensitivity of the above counting system can be increased to measure down to 1 μg or less, whereas the analytical balance used in the ASTM Standard Method is accurate to ±0.1 mg. Further, the radiochemical method is versatile in the investigation of other important parameters that influence the permeability of water vapor. Such versatility is not possessed by other reported radiochemical methods[18-21] or by the ASTM Standard Method for moisture migration.

As paint technology advances, new and better paints are constantly being marketed. Therefore, the paint study conducted here is by no means complete, and the results obtained do not represent the behavior of all other types of films.

CONCLUSIONS

1. The rate of the moisture diffusing through a membrane varies inversely with film thickness.

2. The independence of the permeability constant from thickness is valid, but this condition tends to break down if the film is made of material that absorbs large quantities of water or is hydrophilic in nature.

3. The diffusion rate of moisture vapor increases with an increase in the vapor pressure differential.

4. The independence of the permeability constant from vapor pressure is not true for all types of film. This deviation becomes more apparent with films which are more hydrophilic.

5. The effect of temperature on the diffusion rate and the permeability constant is anomalous in that in the temperature range of this test (22° to 50°C) the expected related rise with temperature was not conclusive. The permeability constant of the less permeable membranes is more sensitive to temperature changes than those of more permeable membranes.

6. Since a straight line passes through the origin, only one experimental point is required to determine the curve of permeability versus thickness (1/d) or permeability versus vapor pressure difference (Δp). However, plots tend to deviate from the expected straight lines as the membranes become more hydrophilic in nature.

7. The permeability of polymer films to moisture is highly dependent on the generic type of film. The more hydrophilic the membrane, the greater the permeability.

8. An increase in the pigment concentration generally decreases the permeability of films which are more hydrophilic in nature. The effectiveness of increased pigment concentration to reduce the permeability of films becomes less marked as the vehicle becomes more hydrophobic in nature.

9. The introduction of pigment into paint vehicles may alter the permeability of polymer films greatly by either increasing or decreasing water permeability, relative to the unpigmented base polymer. Some of the pigments reduce the permeability of films more effectively than others. The extent of the increase or decrease of the permeability is dependent on solubility, chemical composition of pigments, and pigment volume concentration, as well as, the generic type of polymer vehicle to be pigmented. Although it is not examined in this study, size, compatibility, and despersability of pigments in polymer vehicle probably will play an important roll in affecting the permeability of pigmented polymer films.

10. Moisture in vapor form permeates polymer membranes at a much faster rate than that in the liquid form.

RECOMMENDATION

Since moisture is one of the biggest factors responsible not only for the corrosion of metal but also for the degradation of coatings, coatings for exposure in a moist environment should be as impermeable as possible. Care should be taken when formulating new coatings to insure that a factor is not introduced that would increase permeability.

REFERENCES

1. Department of the Navy. Bureau of Yards and Docks. NAVDOCKS MO-306: Corrosion prevention and control. Washington, D. C., June 1964.

2. H. H. Uhlig. The corrosion handbook. New York, Wiley, 1948.

3. W. Von Fischer and E. G. Bobalek, eds. Organic protective coatings. New York, Reinhold, 1953.

4. F. W. Shanks. "Corrosion and its prevention: a brief review for paint technologists." Journal of Paint Technology, vol. 38, no. 497. June 1966, pp. 351-356.

5. E. E. McSweeney. "Water and metals," Official Digest, vol. 37, no. 485, June 1965, pp. 670-82.

6. F. L. LaQue. Corrosion resistance of metals and alloys, 2d ed. New York, Reinhold, 1963, pp. 83-157. (ACS Monograph series, no. 158)

7. R. M. Barrer. Diffusion in and through solids. Cambridge, England, The University press, 1951.

8. A. C. Elm. "Paints as moisture barriers," Official Digest, vol. 19, no. 267, 1947, pp. 197-228.

9. C. A. Kumins and J. Roteman. "Diffusion of gases and vapor through unpigmented vinyl films," Official Digest, vol. 34, no. 445, Feb. 1962, pp. 177-193.

10. A. S. Michaels. "Water and the barrier film," Official Digest, vol. 37, no. 485, June 1965, pp. 638-653.

11. P. W. T. Willmott and F. W. Billmeyer. "Structure-property relationships in high polmers: I. Solubility and diffusion of water vapor in aliphatic polyesters," Official Digest, vol. 35, no. 464, Sept. 1963, pp. 847-856.

12. H. G. Spencer. "Effect of chemical composition on the diffusion and permeability of water vapor in polymer films," Official Digest, vol. 37, no. 486, July 1965, pp. 757-765.

13. General Electric Company. Missile and Armament Department. Fundamentals of permselective membrane technology. Burlington, Vt., 1964.

14. E. T. Bush. "General applicability of the channels ratio method of measuring liquid scintillation counting efficiencies," Analytical Chemistry, vol. 35, no. 8, July 1963, pp. 1024-1029.

15. Naval Civil Engineering Laboratory. Technical Note N-992. Water vapor diffusion through protective coatings. Part I. A method of measuring water vapor permeability of coating films by radioisotope tracer technique and its application, by E. S. Matsui. Port Hueneme, Calif., Oct. 1968.

16. S. Glasstone. Text-book of physical chemistry, 2d ed. New York, D. Van Nostrand, 1946, pp. 696-697.

17. P. M. Doty, W. H. Aiken and H. Mark. "Water vapor permeability of organic film," Industrial and Engineering Chemistry, Analytical ed., vol. 16, no. 11. Nov. 1944, pp. 689-690.

18. R. E. Murdock. "Permeation of paint films by environmental agents," paper presented at Western Regional Conference, National Association of Corrosion Engineers, San Francisco, California, Oct. 6, 1966.

19. A. L. Glass and J. Smith. "A radiochemical investigation into the diffusion of ions through protective film," Journal of Paint Technology, vol. 38, no. 495, Apr. 1966, pp. 203-209.

20. ———. "A radiochemical investigation of the effect of pigment on the diffusion of ions through protective films," Journal of Paint Technology, vol. 39, no. 511. Aug. 1967, pp. 490-493.

21. J. H. Deterding, D. W. Singleton, and R. W. Wilson. "Permeability of paint films to water," in Proceedings, Congres International de la Corrosion Marine et des Salissures, June 8-12, 1964, Cannes, France. Paris, France, Centre de Recherches et d'Etudes Oceanographiques, 1965, pp. 275-283.

Unclassified

Security Classification

DOCUMENT CONTROL DATA - R & D

(Security classification of title, body of abstract and indexing annotation must be entered when the overall report is classified)

1. ORIGINATING ACTIVITY (Corporate author) Naval Civil Engineering Laboratory Port Hueneme, California	2a. REPORT SECURITY CLASSIFICATION Unclassified 2b. GROUP

3. REPORT TITLE

WATER PERMEABILITY OF COATING FILMS USING A RADIOISOTOPE TRACER TECHNIQUE

4. DESCRIPTIVE NOTES (Type of report and inclusive dates)

Final; July 1968–June 1969

5. AUTHOR(S) (First name, middle initial, last name)

Eddy S. Matsui

6. REPORT DATE April 1970	7a. TOTAL NO. OF PAGES 32	7b. NO. OF REFS 21
8a. CONTRACT OR GRANT NO. b. PROJECT NO. Z-R011-01-01-087 c. d.	9a. ORIGINATOR'S REPORT NUMBER(S) TR-674 9b. OTHER REPORT NO(S) (Any other numbers that may be assigned this report)	

10. DISTRIBUTION STATEMENT

This document has been approved for public release and sale; its distribution is unlimited.

11. SUPPLEMENTARY NOTES	12. SPONSORING MILITARY ACTIVITY Director of Navy Laboratories Washington, D. C. 20360

13. ABSTRACT

The report deals with the development of an accurate and rapid method of determining moisture permeability through protective coatings using radiochemical techniques. It demonstrates that the radiochemical method, as compared to the ASTM Standard Method, is precise, sensitive and rapid. This method has been used to analyze variables which may have a significant effect on the moisture permeability of paint films. The variables analyzed include film thickness, vapor pressure, temperature, generic type of vehicle, type of pigment concentration, and moisture diffusion in liquid or vapor form.

DD FORM 1 NOV 65 1473 (PAGE 1)

S/N 0101-807-6801

Unclassified

Security Classification

Unclassified

Security Classification

14 KEY WORDS	LINK A ROLE	LINK A WT	LINK B ROLE	LINK B WT	LINK C ROLE	LINK C WT
Coating films						
Water permeability						
Radioisotope tracer						
Tritiated water						
Alkyd film						
Epoxy films						
Film thickness						
Vapor pressure						
Temperature						
Pigment						
Moisture diffusion						
Liquid form						
Vapor form						

DD FORM 1 NOV 65 1473 (BACK)

(PAGE 2)

Unclassified

Security Classification

705988

NAVAL CIVIL ENGINEERING
LABORATORY
PORT HUENEME, CALIFORNIA 93041

IN REPLY REFER TO:
L36/OWC/lg
Z-R011-01-01-087
Serial 1406
20 July 1970

From: Commanding Officer
To: Distribution List

Subj: Errata Sheet for Technical Report R-674, "Water Permeability of Coating Films Using a Radioisotope Tracer Technique," by Eddy S. Matsui

1. Please make the following pen and ink correction on page 23, Figure 8. The legend was transposed. It should read:

Epoxy film

Alkyd film

OCEAN W. CHANDLER
By direction

Reproduced by the
CLEARINGHOUSE
for Federal Scientific & Technical
Information Springfield Va. 22151