SAMSO-TR-70-62

AD 702442

LASER PLANOGRAM MEASUREMENTS OF TURBULENT MIXING STATISTICS IN THE NEAR WAKE OF A SUPERSONIC CONE

A.M. Schneiderman and G.W. Sutton

AVCO EVERETT RESEARCH LABORATORY

AMP 296
MARCH 1970

DDC
MAR 20 1970
B

jointly sponsored by
ADVANCED RESEARCH PROJECTS AGENCY
DEPARTMENT OF DEFENSE
ARPA Order #1092
and
SPACE AND MISSILE SYSTEMS ORGANIZATION
AIR FORCE SYSTEMS COMMAND
DEPUTY FOR RE-ENTRY SYSTEMS (SMY)
Norton Air Force Base, California 92409

DISTRIBUTION OF THIS DOCUMENT IS UNLIMITED

This document has been approved for public release and sale; its distribution is unlimited.

20

SAMSO-TR-70-62 AMP 296

LASER PLANOGRAM MEASUREMENTS OF TURBULENT MIXING STATISTICS IN THE NEAR WAKE OF A SUPERSONIC CONE*†

by

A. M. Schneiderman and G. W. Sutton

March 1970

AVCO EVERETT RESEARCH LABORATORY
a division of
AVCO CORPORATION
Everett, Massachusetts

*This research was supported by the Advanced Research Projects Agency of the Department of Defense and Space and Missile Systems Organization, Air Force Systems Command and was monitored by Space and Missile Systems Organization, Air Force Systems Command under Contract F04701-69-C-0122.

†Submitted to Journal of Physics of Fluids

DISTRIBUTION OF THIS DOCUMENT IS UNLIMITED

FOREWORD

Distribution of this document is unlimited. This indicates document has been cleared for public release by competent authority.

"This research was supported by the Advanced Research Projects Agency of the Department of Defense and Space and Missile Systems Organization, Air Force Systems Command and was monitored by Space and Missile Systems Organization, Air Force Systems Command under Contract F04701-69-C-0122." The secondary report number as assigned by AERL is Avco Everett Research Laboratory AMP 296. The Air Force program monitor for this contract is T. W. Graham, 1st Lt., USAF, Project Officer, Environmental Technology Branch, SMYSE.

Publication of this report does not constitute Air Force approval of the report's findings or conclusions; it is published only for the exchange and stimulation of ideas.

T. W. Graham, 1st. Lt., USAF,
Project Officer,
Environmental Technology Branch
SMYSE

ABSTRACT

The laser planogram technique is a new method for the study of turbulent mixing. It utilizes a pulsed laser and a particulate tracer to determine the spatial mixing field of tagged and untagged fluids. The laser planogram technique is described along with design considerations. As an example of its implementation, laser planogram measurements have been obtained and analyzed to provide turbulent mixing statistics in the wake of a cone at a Mach number of 2.5 and a Reynolds number of 3×10^6. The mean radial concentration profile of tagged material is shown to be a Gaussian in agreement with theory. A $k^{-5/3}$ spectral dependence on wave number is observed which is characteristic of high turbulent Reynolds number flows. Experimental limitations prevent the resolution of the turbulent scale lengths in the present experiment although the integral scale should be easily resolved with increased data length.

BLANK PAGE

TABLE OF CONTENTS

		Page
	Foreword	ii
	Abstract	iii
I.	INTRODUCTION	1
II.	TURBULENT WAKE EXPERIMENT	4
III.	CONCLUSIONS	11
	ACKNOWLEDGMENTS	12
	REFERENCES	13

I. INTRODUCTION

Two classes of measurements of turbulent flow statistics have been made to date. The first (e. g., hot-wire anemometry, electron beams, crossed optical beams) involves observation of the temporal fluctuations at one or more discrete points in a turbulent field.[1-3] The second (e. g., schlieren or shadowgraphs) involves a spatial, two-dimensional projection of a three-dimensional field.[4-5] The first method is limited by its point nature and/or frequency response, while the second method requires critical statistical assumptions to unfold meaningful information from a measurement that integrates over a large and perhaps inhomogeneous optical path.

The laser planogram technique represents a new method for the measurement of turbulent statistics in that its direct output is a two-dimensional spatial cut from a three-dimensional turbulent concentration field. This technique, as applied to the near wake of a supersonic cone, is shown schematically in Fig. 1. A passive scalar particulate tracer is introduced into the model boundary layer where it becomes uniformly mixed, thus tagging each fluid element. The concentration of tracer at some downstream position is, therefore, a measure of the turbulent mixing field of the two fluid fields. To detect the tracer

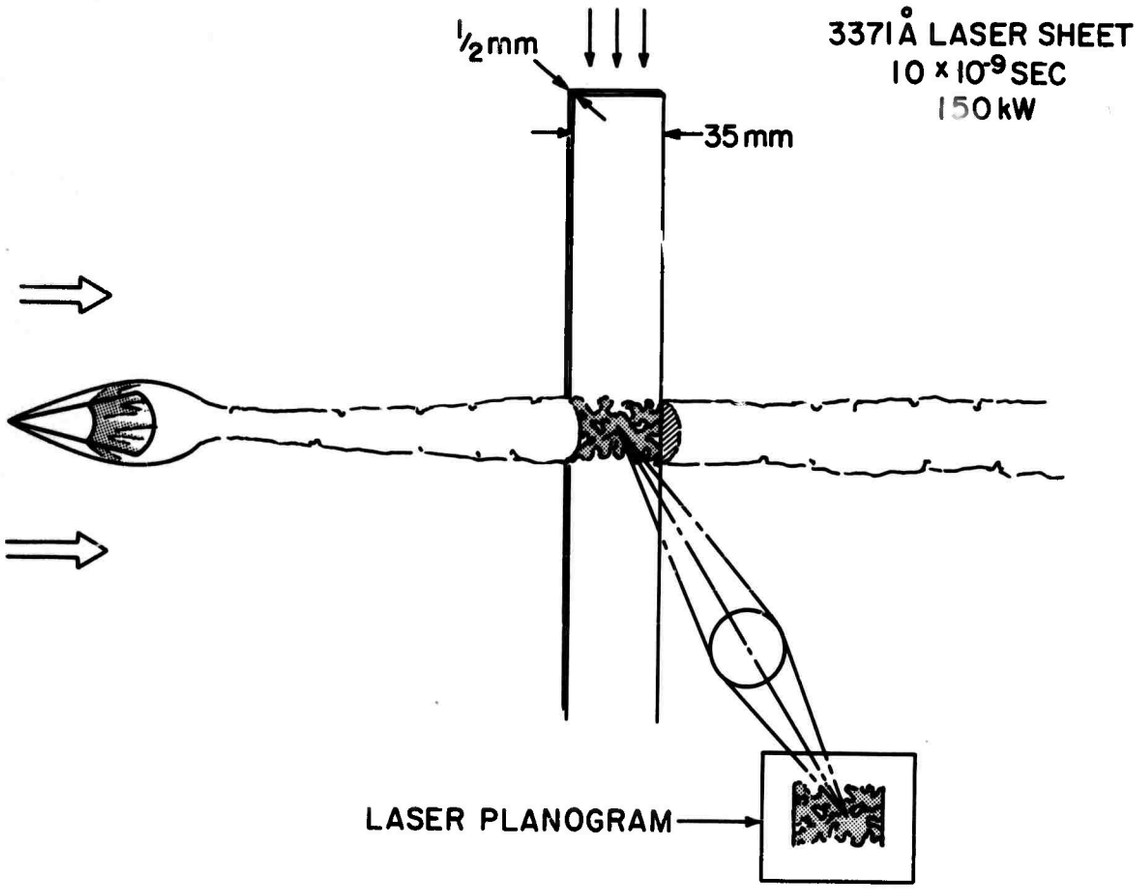

Fig. 1 Schematic representation of the laser planogram technique as applied to a supersonic wake.

B2254

distribution, a pulsed planar laser sheet is passed through the axis of the wake in the meridian plane, and the light scattered at 90° by the tracer particles is recorded photographically. The resulting film density bears a direct relation to the instantaneous tracer concentration distribution in the plane illuminated by the laser sheet.

The choice of a tracer is determined by the following requirements:

1. The particles must be of sufficiently small diameter so that the Stokes' drag on them overcomes the inertial loading of the turbulent motion. This is necessary if the tracer is to effectively tag the original fluid elements of the wake.
2. The particles' number density must be high enough so that they act as a continuum in the resolution volume to prevent particle "shot noise."
3. The particles must be stable with respect to coagulation and evaporation.
4. The presence of particulate matter should not disturb the turbulent wake parameters either by enhancing the turbulent dissipation rate or by grossly modifying integral properties such as momentum or mass defects.
5. The particles must scatter sufficient light for recording purposes yet be optically thin to prevent multiple scattering. The latter requirement minimizes the possibility of light reaching a point in the laser planogram after being scattered from two distinct wake locations.

These considerations when applied to a given turbulent flow field

and a desired spatial frequency response usually yield an optimum number density and particle diameter. This results from the competition between the requirements that the particles be small enough to follow the fluctuations (1), yet large in order to be efficient light scatterers(5). Similarly, their number density must be large enough to prevent "shot noise" (2) yet small to minimize gross effects on the flow field (4) and prevent multiple scattering (5). The smoke employed in the present experiments is formed by combustion of tobacco leaf and generally satisfies the above criteria, see below.

II. TURBULENT WAKE EXPERIMENT

The laser planogram technique has been applied to the turbulent wake shed by a 10° half angle, 1 in. base diam cone mounted in a short duration wind tunnel. This tunnel is a modified Ludwieg tube[6] which operates at a Mach number of 2.5 and a Reynolds number of 3×10^{6} per inch using room stagnation temperature air. Smoke is injected with azimuthal uniformity into the cone boundary layer and a laser planogram is made of the turbulent mixing field in the near wake at an X/D = 12. At this position, a 150 kW, 1/2 mm by 35 mm pulsed laser (3317 Å)[7] sheet is passed through the wake axis. The light scattered at 90° by the smoke particles is then collected by an F/16 optical system, multipled in a high resolution two-stage image intensifier and recorded on high speed photographic film. The laser pulse width of 10×10^{-9} sec provides shuttering for the system. The combined flow of particulate matter and carrier gas represents less than 10^{-3} of the intercepted free stream mass flow and therefore has a negligible effect on the flow field.

Figure 2 is an ensemble of typical laser planograms obtained under the above conditions. A distinct surprise to us is the large scale structure of the turbulence together with its estuaries and peninsulas. In order to check whether typical turbulent wake flow was, in fact, achieved, the time average smoke profile was measured experimentally by obtaining a long exposure planogram using a xenon flash lamp in place of the laser light source.

The theoretical mean velocity distribution in a self-preserving axisymmetric wake is a Gaussian[8] where the standard deviation or "transverse scale length," L, can be written

$$\left(\frac{L}{\sqrt{C_D A}}\right)^3 = \frac{3}{4}\,\frac{1}{R_T'}\,\frac{Z-Z_o}{\sqrt{C_D A}}$$

where $\sqrt{C_D A}$ is the model drag diameter, $Z-Z_o$ is the axial distance from virtual wake origin, and R_T' is a constant.

For a transferable scalar quantity, such as the concentration of a passive species, the same relations can be shown to apply[9] except that the scale length must be replaced by $L_\gamma = L/\sqrt{Sc}$ where Sc is the turbulent Schmidt number for the gas.

To determine the expected value of L_γ for the present experiment, the drag coefficient, C_D, was determined from a Taylor-Maccoll cone solution and R_T' was taken as 12.8.[10] The wake origin was chosen as the model base (i.e., $Z_o = 0$) and a turbulent Schmidt number of unity was assumed. A value of L_γ = 6.4 mm was computed.

The measured mean profile is shown in Fig. 3. It is in excellent agreement with a Gaussian (max difference ≅ 10% within 2σ of the center

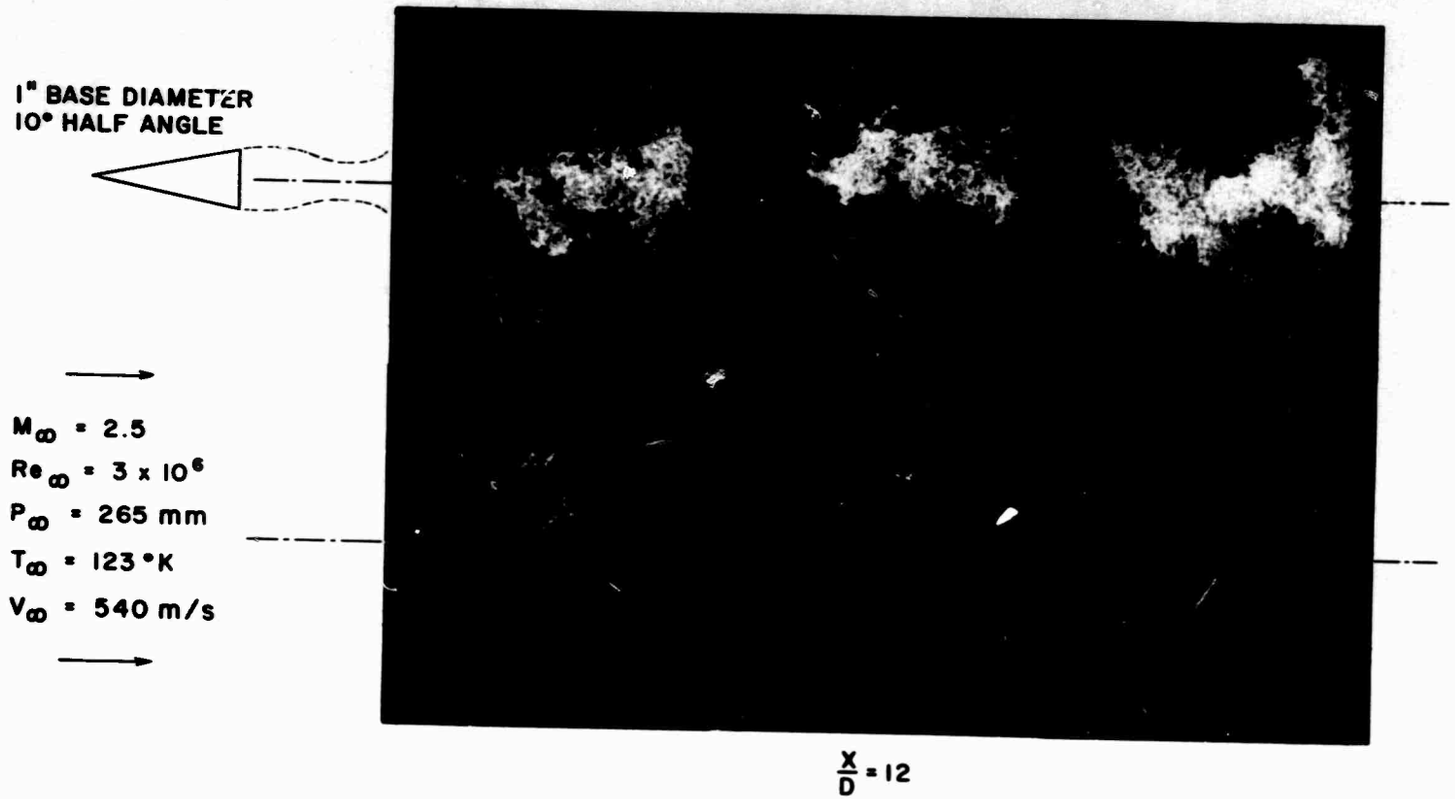

Fig. 2 An ensemble of wake laser plaograms

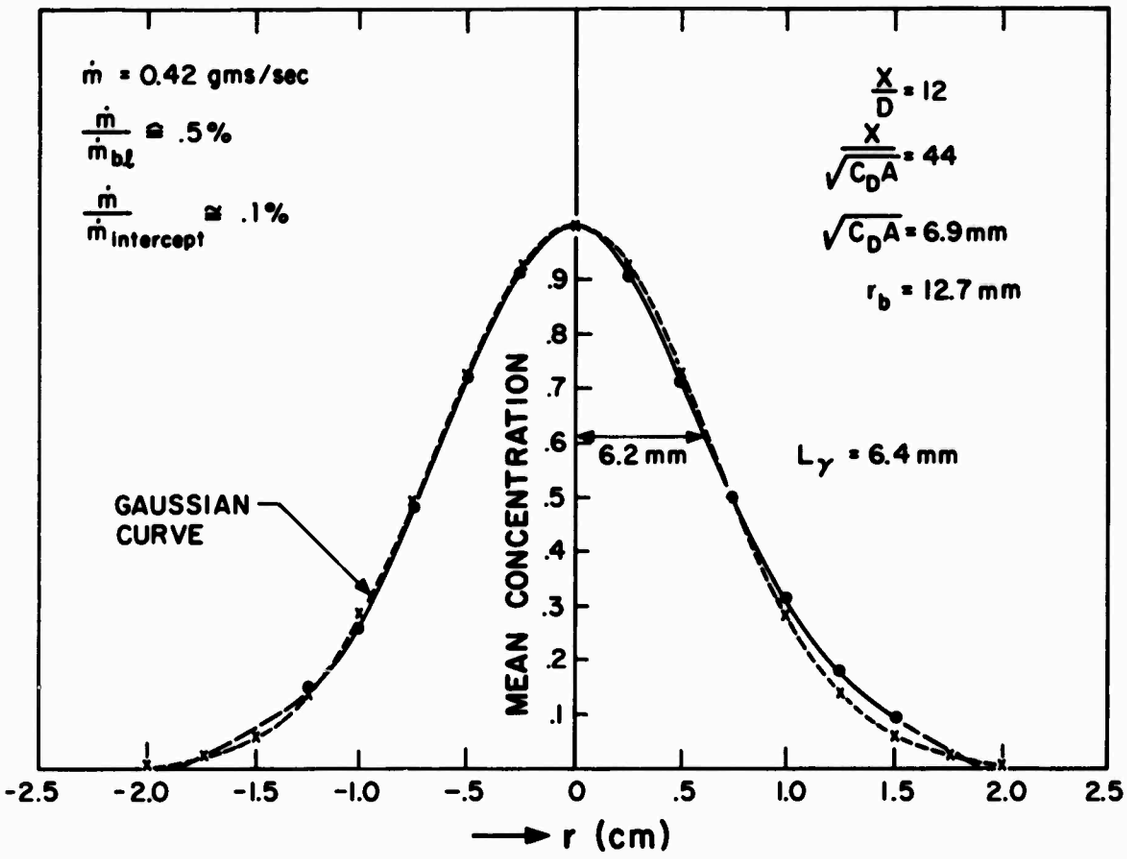

Fig. 3 Normalized radial mean concentration profile

B3713X

line) and has a standard deviation of 6.2 mm which compares favorably with the transverse scale length of 6.4 mm computed above.

Having satisfied ourselves that the mean smoke profiles were representative of turbulent wake flows, the laser planograms were processed statistically to obtain autocorrelation coefficients and power spectral density. The negative was scanned with a microdensitometer and a film calibration was then applied to yield concentration as a function of position along a radial or axial line. These data were then processed by standard digital techniques.[11] In order to extract the mean concentration, a least mean square linear fit was made with the axial scans while a least mean square Gaussian was fit through the radial profile. The measured transverse scale length was used in making the least mean square Gaussian fit. Theoretical considerations also show that the mean concentration decreases as $(Z-Z_o)^{-2/3}$ which justified the use of a linear fit over short axial scans.

Figures 4 and 5 are the autocorrelation coefficient and power spectral density estimates obtained from radial scans and axial scans on-axis and at a radius equal to the measured transverse scale length L_γ. The variance of the estimates was reduced by ensemble averaging the results obtained from the six wake laser planograms of Fig. 2. As can be seen from Fig. 5, the data are in good agreement with the $k^{-5/3}$ dependence of the universal equilibrium subrange of the turbulent energy spectrum. The RMS concentration fluctuation referenced to the mean value was determined for each scan. Averaged over the six wake laser planograms they took on values of 1.13, 0.84, 0.54 for the

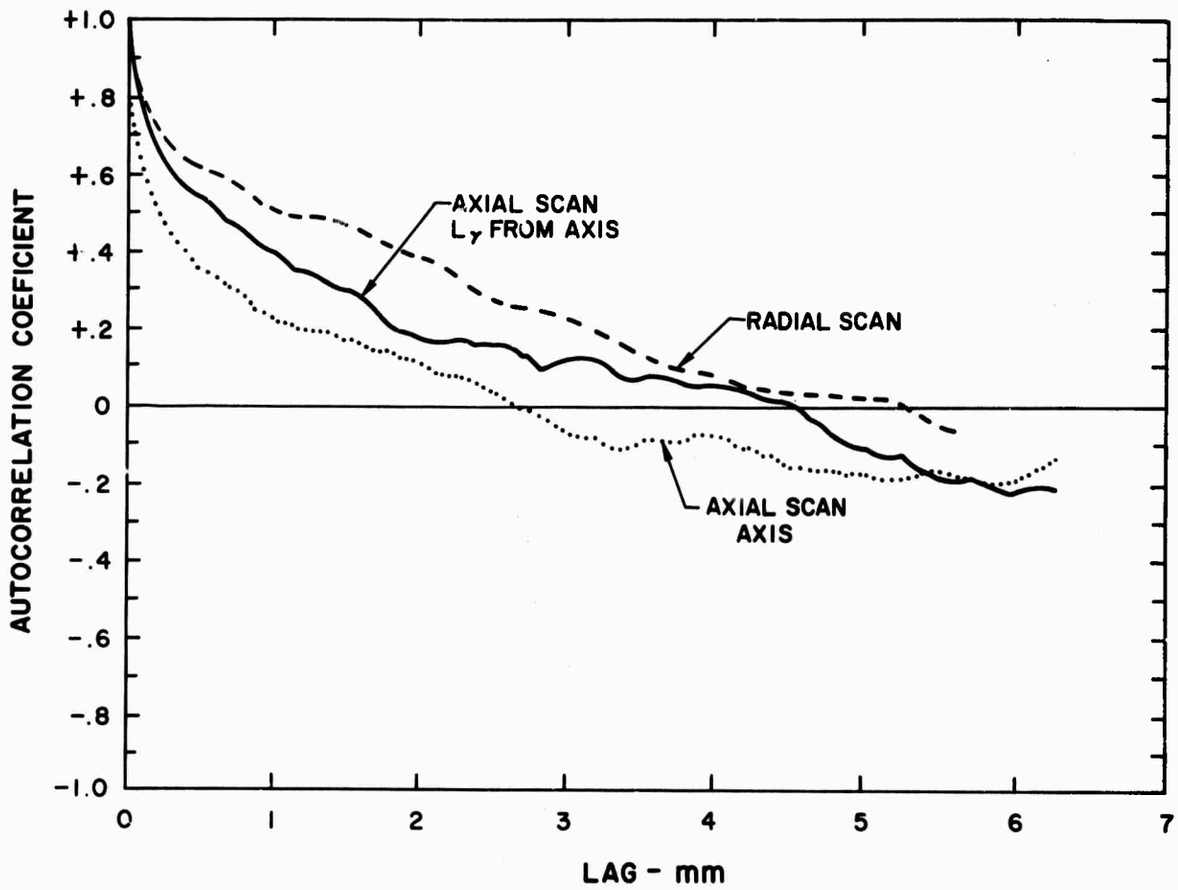

Fig. 4 Ensemble averaged autocorrelation coefficient for three scans of the laser planograms shown in Fig. 2

B4865

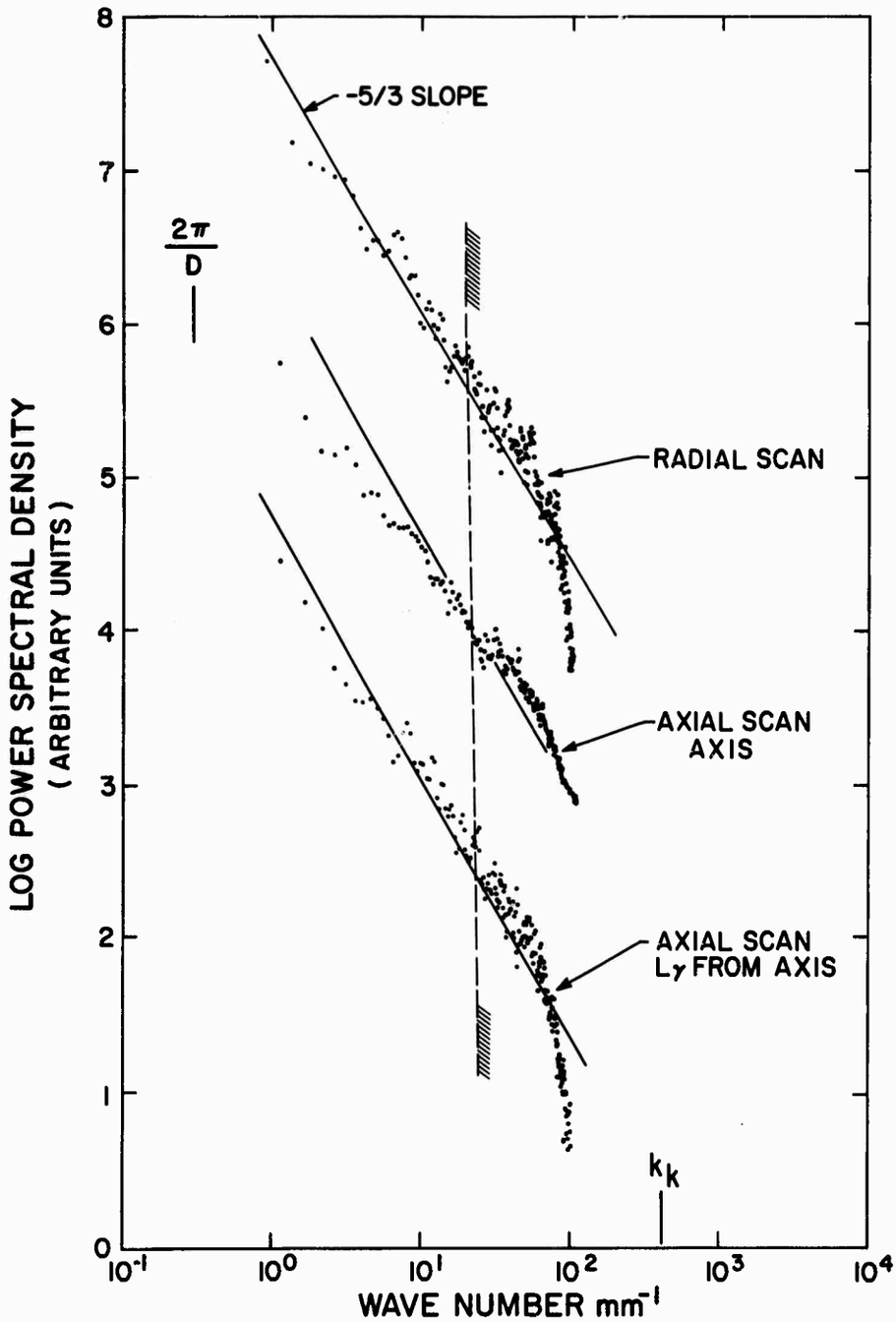

Fig. 5 Power spectral density obtained from the autocorrelation coefficients. Shown are the Kolmogoroff wave number, k_k, and the wave number based on the model diameter, $2\pi/D$. Note that the three spectra have different and arbitrary scales in power spectral density. The dashed vertical line represents the resolution limit based on the laser sheet thickness.

B4154

radial, on-axis and off-axis cases respectively.

III. CONCLUSIONS

The spectral results, along with the measured Gaussian mean profile, suggest that the rather crude smoke source used in this experiment satisfied the five requirements described above, although no direct measurements of particle size or number density have been made.

Insufficient data length in the present experiment has prevented determination of the turbulent macroscale which bounds the $k^{-5/3}$ spectrum at low wave number and which one would expect to be of the order of 2π divided by the cone base diameter. Also, the finite laser sheet thickness makes the data to the right of the vertical dashed line questionable. This prevents resolution of the Kolmogoroff wave number[9] which is approximately 500 mm^{-1} (with an assumed isotropic dissipation rate).

The first of these limitations is easily overcome by increasing the length of the wake recorded by the laser planogram. The experimental limitations on high wave number response seem at present more stringent. In addition to the thickness of the laser sheet, which in principle can be made a small fraction of a millimeter, particle "shot noise" can only be eliminated with molecular rather than particulate scattering techniques. It is expected that the laser planogram technique will provide detailed information in the low wave number portion of the spectrum and may provide useful information with regard to possible anomalies in the vicinity of the Kolmogoroff wave number.

ACKNOWLEDGMENTS

The authors wish to acknowledge the assistance of Dr. Igor Eberstein in designing and fabricating the initial experimental apparatus and Mr. Paul K. Maddalena in generating the experimental data. This research was supported by the Advanced Research Projects Agency of the Department of Defense and Space and Missile Systems Organization, Air Force Systems Command, and was monitored by Space and Missile Systems Organization, Air Force Systems Command, under Contract F04701-69-C-0122.

REFERENCES

1) C. H. Gibson, C. C. Chen and S. C. Lin, AIAA J. 6, 642 (1968).

2) A. Demetriades, Phys. Fluids 11, 1841 (1968).

3) H. A. Becker, H. C. Hottel and G. C. Williams, J. Fluid Mech. 30, 259 (1967).

4) R. L. Schapker, AIAA J. 4, 1929 (1966).

5) W. G. Clay, J. Herrman and R. E. Slattery, Phys. Fluids 8, 1792 (1965).

6) A. J. Cable and R. N. Cox, Aeron. Quart. 14, Part 2, 143 (1963).

7) D. E. Leonard, Laser Focus 3, 26 (1967).

8) A. A. Townsend, The Structure of Turbulent Shear Flow (Cambridge University Press, London, 1956), p. 170.

9) J. O. Hinze, Turbulence, (McGraw-Hill Book Company, New York, 1959), Chap. 6.

10) A. Demetriades, AIAA J. 6, 432 (1968).

11) J. S. Bendat and A. G. Persol, Measurement and Analysis of Random Data, (John Wiley and Sons, Inc., New York, 1966).

UNCLASSIFIED
Security Classification

DOCUMENT CONTROL DATA - R&D
(Security classification of title, body of abstract and indexing annotation must be entered when the overall report is classified)

1. ORIGINATING ACTIVITY *(Corporate author)*
Avco Everett Research Laboratory
2385 Revere Beach Parkway
Everett, Massachusetts

2a. REPORT SECURITY CLASSIFICATION
Unclassified

2b. GROUP

3. REPORT TITLE
Laser Planogram Measurements of Turbulent Mixing Statistics in the Near Wake of a Supersonic Cone

4. DESCRIPTIVE NOTES *(Type of report and inclusive dates)*
AMP 296

5. AUTHOR(S) *(Last name, first name, initial)*
Schneiderman, A. M. and Sutton, G. W.

6. REPORT DATE
March 1970

7a. TOTAL NO. OF PAGES
13

7b. NO. OF REFS
11

8a. CONTRACT OR GRANT NO.
F04701-69-C-0122

b. PROJECT NO.

c.

d.

9a. ORIGINATOR'S REPORT NUMBER(S)
AMP 296

9b. OTHER REPORT NO(S) *(Any other numbers that may be assigned this report)*
SAMSO-TR-70-62

10. AVAILABILITY/LIMITATION NOTICES
Distribution of this document is unlimited. This indicates document has been cleared for public release by competent authority.

11. SUPPLEMENTARY NOTES

12. SPONSORING MILITARY ACTIVITY Advanced Research Projects Agency, Department of Defense, ARPA Order #1092 and SAMSO, AFSC, Deputy for Re-entry Systems (SMY), Norton Air Force Base, Cal. 92409.

13. ABSTRACT

The laser planogram technique is a new method for the study of turbulent mixing. It utilizes a pulsed laser and a particulate tracer to determine the spatial mixing field of tagged and untagged fluids. The laser planogram technique is described along with design considerations. As an example of its implementation, laser planogram measurements have been obtained and analyzed to provide turbulent mixing statistics in the wake of a cone at a Mach number of 2.5, and a Reynolds number of 3×10^6. The mean radial concentration profile of tagged material is shown to be a Gaussian in agreement with theory. A $k^{-5/3}$ spectral dependence on wave number is observed which is characteristic of high turbulent Reynolds number flows. Experimental limitations prevent the resolution of the turbulent scale lengths in the present experiment although the integral scale should be easily resolved with increased data length.

(k exp -5/3)

DD FORM 1 JAN 64 1473

UNCLASSIFIED
Security Classification

14. KEY WORDS	LINK A ROLE	LINK A WT	LINK B ROLE	LINK B WT	LINK C ROLE	LINK C WT
1. Turbulence						
2. Wakes						
3. Particle Flows						
4. Light Scattering						
5. Compressible Flow						
6. Turbulent Wakes						
7. Laser Application						

INSTRUCTIONS

1. ORIGINATING ACTIVITY: Enter the name and address of the contractor, subcontractor, grantee, Department of Defense activity or other organization *(corporate author)* issuing the report.

2a. REPORT SECURITY CLASSIFICATION: Enter the overall security classification of the report. Indicate whether "Restricted Data" is included. Marking is to be in accordance with appropriate security regulations.

2b. GROUP: Automatic downgrading is specified in DoD Directive 5200.10 and Armed Forces Industrial Manual. Enter the group number. Also, when applicable, show that optional markings have been used for Group 3 and Group 4 as authorized.

3. REPORT TITLE: Enter the complete report title in all capital letters. Titles in all cases should be unclassified. If a meaningful title cannot be selected without classification, show title classification in all capitals in parenthesis immediately following the title.

4. DESCRIPTIVE NOTES: If appropriate, enter the type of report, e.g., interim, progress, summary, annual, or final. Give the inclusive dates when a specific reporting period is covered.

5. AUTHOR(S): Enter the name(s) of author(s) as shown on or in the report. Enter last name, first name, middle initial. If military, show rank and branch of service. The name of the principal author is an absolute minimum requirement.

6. REPORT DATE: Enter the date of the report as day, month, year; or month, year. If more than one date appears on the report, use date of publication.

7a. TOTAL NUMBER OF PAGES: The total page count should follow normal pagination procedures, i.e., enter the number of pages containing information.

7b. NUMBER OF REFERENCES: Enter the total number of references cited in the report.

8a. CONTRACT OR GRANT NUMBER: If appropriate, enter the applicable number of the contract or grant under which the report was written.

8b, 8c, & 8d. PROJECT NUMBER: Enter the appropriate military department identification, such as project number, subproject number, system numbers, task number, etc.

9a. ORIGINATOR'S REPORT NUMBER(S): Enter the official report number by which the document will be identified and controlled by the originating activity. This number must be unique to this report.

9b. OTHER REPORT NUMBER(S): If the report has been assigned any other report numbers *(either by the originator or by the sponsor)*, also enter this number(s).

10. AVAILABILITY/LIMITATION NOTICES: Enter any limitations on further dissemination of the report, other than those imposed by security classification, using standard statements such as:

(1) "Qualified requesters may obtain copies of this report from DDC."

(2) "Foreign announcement and dissemination of this report by DDC is not authorized."

(3) "U. S. Government agencies may obtain copies of this report directly from DDC. Other qualified DDC users shall request through _____."

(4) "U. S. military agencies may obtain copies of this report directly from DDC. Other qualified users shall request through _____."

(5) "All distribution of this report is controlled. Qualified DDC users shall request through _____."

If the report has been furnished to the Office of Technical Services, Department of Commerce, for sale to the public, indicate this fact and enter the price, if known.

11. SUPPLEMENTARY NOTES: Use for additional explanatory notes.

12. SPONSORING MILITARY ACTIVITY: Enter the name of the departmental project office or laboratory sponsoring *(paying for)* the research and development. Include address.

13. ABSTRACT: Enter an abstract giving a brief and factual summary of the document indicative of the report, even though it may also appear elsewhere in the body of the technical report. If additional space is required, a continuation sheet shall be attached.

It is highly desirable that the abstract of classified reports be unclassified. Each paragraph of the abstract shall end with an indication of the military security classification of the information in the paragraph, represented as *(TS)*, *(S)*, *(C)*, or *(U)*.

There is no limitation on the length of the abstract. However, the suggested length is from 150 to 225 words.

14. KEY WORDS: Key words are technically meaningful terms or short phrases that characterize a report and may be used as index entries for cataloging the report. Key words must be selected so that no security classification is required. Identifiers, such as equipment model designation, trade name, military project code name, geographic location, may be used as key words but will be followed by an indication of technical context. The assignment of links, rules, and weights is optional.