246

AD 702243

2594

AD 702243

TECHNICAL REPORT NO. 10753

NEW GENERATION OF TIRE AND WHEEL ASSEMBLIES

PHASE I

FINAL REPORT

by Edmund Thelen
Richard H. Hollinger
James B. Dunfee
William B. Tarpley, III

FRANKLIN INSTITUTE RESEARCH LABORATORIES
Philadelphia, Pennsylvania 19103

December, 1969

Contract No. DAAE07-69-C-2601

TACOM

VEHICULAR COMPONENTS & MATERIALS LABORATORY

U.S. ARMY TANK AUTOMOTIVE COMMAND Warren, Michigan

20020730251

ATAC TECHNICAL REPORT NO. 10753

NEW GENERATION OF TIRE AND WHEEL ASSEMBLIES

FINAL REPORT - PHASE I

Edmund Thelen
William B. Tarpley, III
Richard H. Hollinger
James B. Dunfee

December, 1969

Prepared by:

THE FRANKLIN INSTITUTE RESEARCH LABORATORIES
Philadelphia, Pennsylvania 19103

Contract No. DAAE07-69-C-2601

for

U. S. ARMY TANK-AUTOMOTIVE COMMAND
Warren, Michigan 48090

This document has been approved for public release and sale; its distribution is unlimited.

ABSTRACT

This project was a feasibility study to evaluate. singly and in combination, new design concepts for wheel and tire assemblies. Some of these were combined to delineate a type of tire and wheel assembly which should be outstanding in life, and minimal in vulnerability and maintenance. The new assembly will weigh no more than its present counterpart, and with further development may be reduced by as much as 30%. On a unit-for-unit basis the new assemblies at present would cost more than the present ones, but on a cost-benefit basis and with large quantity production, they are expected to be cheaper.

FOREWORD

This work was authorized by the U.S. Army Tank-Automotive Command Contract DAAE07-69-C-2601. It was carried out under DA Project/ Task Area/Work Unit No.

It is a part of the USATACOM program to improve wheeled army vehicle performance and reliability thru significant advances in tire design and technology.

The interest and counsel of Mr. Roger Kirk, USATACOM project engineer, were of great value to this project and are acknowledged with appreciation.

TABLE OF CONTENTS

Section	Page
ABSTRACT	i
FOREWORD	ii
INTRODUCTION	1
OBJECT	2
SUMMARY	4
CONCLUSIONS	5
RECOMMENDATIONS	6
EVALUATION OF DESIGN CONCEPTS	7
1. Requirements	7
2. Integral Tire and Wheel (Concept B-1)	7
3. Resin-Fibre Composite Wheel (Concept B-2)	8
4. Thin-Walled Carcass (Concept B-3) and Single Steel Wire Radial Ply (Concept B-4)	9
5. Minimal Carcass Lined with Foam (Concept B-5)	11
6. Tire Shape (Concept B-6)	11
7. Removable and Replaceable Treads (Concept B-7)	12
8. Armored Tires (Concept B-8)	13
9. Inflation Gas (Concept B-9)	14
PROPOSED DESIGN	16
APPENDICES	
A. Wheel and Tire Assembly (WTA) Requirements	A1
B. Design of Reinforced Plastic Wheel Section	B1
C. Methods of Molding	C1
D. Reinforced Polymer Composites	D1
E. Steel Reinforcing Wires in Radial Ply Tires	E1
F. Elastomers	F1
G. Review of Microfilms - Armor	G1

LIST OF FIGURES

Fig. No.		Page
1	New Concept WTA - Construction.	17
2	New Wheel and Tire Assembly	18
A	The Model	B2
B	Suggested Product	B5

LIST OF TABLES

Table No.		Page
D-1	Comparison of Resin Systems.	D2
D-2	Comparison of Reinforcement Fibre and Wire	D5
F-1	Elastomer Properties	F2

INTRODUCTION

In general, tire developments have moved in two directions:

1. Increasing the amount of rubber, number of plies, thickness of walls, or solids content, to provide resistance to puncture, run-flat capability, and other advantages at a greater weight and cost - such as the Commando tire and the pressurized foam filler which we developed in 1963-5.

2. Introduction of new design concepts, materials, and principles such as in the single steel ply radial tire and the hollow sphere packing being developed by the Franklin Institute. This second class of development presents the possibility of a lighter, cheaper, puncture-proof, maintenance-free tire assembly; hence is the subject of this project.

In brief, this project is an investigation to define a new generation of tire assemblies for military vehicles, and to determine the most feasible ways to design and build such assemblies.

OBJECT

The object of the present work is to seek out and investigate concepts of light weight, high strength, low vulnerability tire assemblies. The findings are to include performance advantages and disadvantages, manufacturing and cost feasibility, and applicability to military tires for use on combat vehicles and possibly on tactical wheeled vehicles. Common to all these concepts will be the Franklin Institute developed pressurized spheres packed under pressure in tubeless military tire casings. Among the concepts to be studied and reported are the following:

B1. Tire and wheel constituting a single unit, eliminating weight and cost of beads, rims and associated hardware.

B2. Substitution of a high strength impact resistant resin composition for steel in the wheel.

B3. A thinner walled carcass with a minimum of bonded cord or other heterogeneous elements, resulting in a cooler running tire of less weight and less susceptible to delamination by squirming or bruising.

B4. A well bonded single steel wire radial ply tire might be used in place of several cord plies to minimize heat build-up and delamination, and to lower rolling resistance.

B5. A minimal carcass could be lined with a tough cellular polymer (foam) to help provide good ride characteristics, lateral stability and shape retention.

B6. Assuming a new skin-foam casing were adopted, the tire would be softer in compression (greater deflection) and tougher in tension than present conventional casings. Hence, optimum tire shape need be investigated.

B7. Removable and replaceable treads could be considered on a radial ply carcass.

B8. A wide-based tire could be protected by armor attached to (and demountable from) the wheel. Steel, ceramic or reinforced plastic skirts on or over the wheel could protect the lighter sidewalls while a steel reinforced belt would protect the tire tread, in the event of radial ply or bias belted tires.

B9. Since diffusion rates depend upon both the polymer and the gas, latitude in selection of both could enhance the life of the pressurized spheres within the tire casing.

SUMMARY

Recent developments in tire design, including The Franklin Institute's inflated spheres developed for the U. S. Army Tank-Automotive Command (USATACOM), replaceable treads, high performance reinforced polymers for structural applications, and radial ply--belted tire construction, are utilized in this project to project a new generation of products to meet the continuing military demand for low vulnerability, light-weight, low cost and maintenance-free tires.

Nine concepts listed in our proposal and set forth in the contract were studied singly and in combination and are reported herein. Based on the analyses of these, a new type of wheel and tire assembly is proposed for development and prototype testing. The new assembly is interchangeable on the axle hub with present products. It weighs no more, provides a redundancy of low-vulnerability and get-home capabilities, should require virtually no maintenance, and in the absence of massive destruction conceivably should last the life of the vehicle. Large scale production costs of the new assembly cannot be established reliably at this time; however, savings in spare tires alone, not to mention shipping and stocking and maintenance, will more than offset any likely increase in unit production cost.

CONCLUSIONS

The feasibility of the following design concepts is demonstrated:

(a) integral wheel and tire assembly

(b) resin fibre composite wheel

(c) Single wire steel radial ply and steel belt

(d) low profile, wide cross section

(e) removable and replaceable treads

(f) inflated spheres and back-up pressure chamber

There exists a high probability that a product embodying these concepts can be successfully developed without any weight penalty and that it would have the advantages of very long, virtually maintenance-free life and very low vulnerability.

RECOMMENDATIONS

It is recommended that the development program be continued. Program continuation would involve the detailed design, production and testing of prototype assemblies:

1) Wheel halves will be molded and tested for rigidity, strength, creep, impact fatique, bullet resistance and resistance to water, and fuels at high and low ambient temperatures. Thickness can be altered at will, to reduce weight or increase strength.

2) Elastomeric carcasses will be wound and cured and tested for flex-life, heat build up when flexed, and abrasion and puncture and scuffing resistances, at high and low ambient temperatures. Several design and material options will be tried.

3) Wheel assemblies and carcasses will be filled with inflated spheres and bonded together. These assemblies will be life tested in the laboratory, and changes made as necessary.

4) Treads will be made and attached to the wheel and tire assemblies, and the finished product will be more extensively tested in the laboratory, and made available for service testing in the field.

EVALUATION OF DESIGN CONCEPTS

1. Requirements

As a first step toward the evaluation of design concepts, the wheel and tire assembly was considered in the light of its various functions in the vehicle and its interaction with military logistics, tactics and strategy. The results of this study is "Wheel and Tire Assembly (WTA) Requirements," included as Appendix A of this report.

2. Integral Tire and Wheel (Concept B-1)

The concept is that the tire and wheel might constitute a single unit, eliminating weight and cost of beads, rims and associated hardware.

This concept is valid for tires that will not have to be removed from the wheel during their life. It is anticipated that foam-filled tires or tires packed with inflated spheres will not have to be repaired as a result of punctures or other damage normally deemed repairable. Any damage severe enough to take them out of commission would normally require that the tire be discarded. In order to utilize this concept, it is necessary to optimize the life of the tire. Ways of doing this are described below, as concepts B-3, thin walled carcass; B-4, single radial ply; B-7, replaceable treads; B-8, armor; and B-9, non-diffusing gas.

A very attractive prospect is that of a wheel and tire assembly that (1) will have very long life, (2) require and permit no maintenance except possibly the annual checking of inflation pressure and replacement of treads, and (3) not require spares. If characteristics (1) and (2) can be realized the integral WTA concept can be used not only to save the cost and weight of the beads, rims and associated hardware, but also to prevent injury which might occur if a mechanic were to try to demount a casing filled with pressurized foam or inflated spheres. If a casing cannot be deflated, its removal from the wheel is hazardous unless proper equipment and precautions are used.

The savings in weight and in production costs to be realized with the integral WTA depend upon its design, which is discussed below. Manufacturing feasibility must be incorporated in the design of the assembly; the concept of the integral assembly presents no untoward design challenges.

3. Resin-Fibre Composite Wheel (Concept B-2)

The use of fibre-reinforced resin compositions in helicopter wheels has been described by Norman L. Gamble in the January 1967 issue of the SPE Journal. His load applications were very rigorous (3900 lbs. landing load at 30 mph, 4875 lb. sideward load and 9750 lb. dead radial load) but his wheels exceeded these loads by large factors. His composition was the E787 epoxy resin matrix reinforced with S-glass rovings.

Using the same composition of material, a simulated 7.00 x 16 wheel, was calculated to weigh 11.2 lbs. compared with 19.5 lbs. for the steel product. The calculations, in Appendix B, show that a disk 0.5 inches thick and a rim 0.375 inches thick would be more than strong enough to support a 1500 lb. axle loading under 2.5G radial and 1.25G sideward acceleration. Our Finite Element Analysis computer program can be used to scale the design to various sizes, introduce other loads, and design modifications. The general point is that a well chosen glass-fibre reinforced epoxy composition has a significant strength/weight advantage over a mild steel such as is used in auto and truck wheels.

Appendix C is a study regarding methods of manufacture of fibre-reinforced resin structural members such as wheels. After considering the various commercial methods, we found the method of choice consists of compression molding of a prepreg in matched metal dies. The prepreg is a mat made up of resin coated roving or cloth in multiple layers; this can be made up by the wheel manufacturer, or purchased ready to mold. This, not incidentally, is the method used by Gamble for his aircraft wheels.

Appendix D is a discussion of resin and fibre compositions for consideration in the wheel. Large varieties of both resins and fibres are available, but we judge an epoxy reinforced with E glass fabric to be the best trade-off between physical properties and cost for the wheel. It is noted, however, that epoxy-graphite laminates *exceeding* both the tensile strength and the moduli of mild steel are available but at high cost. Such a product, used as a replacement for steel on an equal volume basis, would weigh only 22% as much.

Materials costs of the two products above are:

		Wheel Wt. lbs.	Matl. Cost Wheel
30% epoxy; 70% E Glass	$ 0.89/lb.	11.2	10.00
65% epoxy; 35% Graphite	12.67/lb.	4.3	54.50
Steel	.11/lb.	19.5	2.14

In large scale, automated production the manufacturing costs (capital and labor) favor the steel but do not increase the difference as shown in the material costs.

4. Thin Walled Carcass (Concept B-3) and Single Steel Wire Radial Ply (Concept B-4)

In tires containing two or more plies of cords, the working of the interfaces between chord and rubber, more than the mechanical losses of either material, cause heat build-up with its attendant weakening of the structure. The cords, normally of polymer, cannot conduct heat away from the worked area. The multiplicity of rubber-cord interfaces also provides planes of weakness where delamination can result from squirming or bruising.

There has been much interest in the U. S. lately in avoiding these difficulties in truck tires thru the use of a single radial ply of steel wire (brass plated). Since we find no data on passenger tires, our Mr. Dunfee looked into the problem. His report, Appendix E, concludes

that radial spring steel wires of .005 inches in diameter or less could be spaced about .0075 to 0.10 inches apart, or twisted in cables spaced further apart. This small wire size is computed for a 1 inch bending radius, germane to the wall concepts in the next section. In a standard design of carcass the bending radius is greater and the wires pressumably could be bigger.

In commercial tires, the radial wires run from one bead, around the tire, to the other bead. The side wall spans are relatively long and since the wires are thin, the walls deform easily in the radial direction. These long spans also suggest a greater probability of lateral shifting of the wires due to cornering loads, poor adhesion, or other degradation of the structure.

These difficulties are avoided in our new design (Fig. 1) in which the sidewall spans of the radial wires, are relatively short. It is likely that only a radial ply design would be successful here. Heat build-up and delamination of bias plies could result from the large amount of mechanical working in this short-span "hinge" region. The short flexible span, compared with the usual high sidewall, should also provide greater stability for cornering.

The fatigue life of this hinge could be a question since the mechanical work in this region will be high. Features to optimize fatigue life include (a) small diameter of wires, (b) thin elastomers walls, permitting the wires to bend over their entire lengths, without kinks, (c) good heat dissipation due to the use of metal wires and thin elastomer sections, and (d) choice of a fatigue resistant, soft but tough elastomer, to avoid stress concentrations due to its rigidity or cracking.

Appendix F by our Mr. Hollinger, is a short study of elastomers for this purpose. No one elastomer is ideal in all its characteristics; ethylene-propylene, fluorocarbon and butyl rubbers are the most interesting. An ideal material might be ethylene-propylene with a thin coating of fluorocarbon to impart oil resistance and flame resistance.

5. Minimal Carcass Lined with Foam (Concept B-5)

If part of the rubber normally present in a sidewall were actually present as a closed-cell foam, the resulting wall would be thicker and have more lateral stability. As a stiffening material, however, the foam would be subjected to large bending strains in the radial direction. This is in contrast to the loads on a foam in a foam filled tire; here the strains are relatively low. In the former case, the free surface of the foam could see high tensile stresses whereas in the foam-filled casing the stresses on the foam are mostly compressive in nature. Because of these differences in loading, it is not presumed that a foam suitable in a foam-filled casing would survive satisfactorily as a sidewall stiffener. The effectiveness of a foam stiffener is in proportion to the stresses it can withstand. Formulation and testing would be required to show whether a foam with good survival performance could contribute significantly to stiffening.

In the design of Fig. 1, the hinge region is deliberately designed to flex readily, and a foam stiffener is not thought to be useful.

6. Tire Shape (Concept B-6)

By making the wheel and tire assembly an integral unit, constraints on wheel size and rim width, required normally for tire interchangeability, are avoided. A wide rim as well as a wide tread can be used to give lateral stability, low inflation pressure and a softer ride.

The depth or profile of the tire section can be reduced by making the wheel section larger in diameter. A low profile tire of conventional design must deflect proportionately more than a higher profile tire, to produce the same spring action. In this respect, it makes greater demands for reliability of construction, and fatigue resistance. From a military point of view, a low profile tire presents a smaller target to snipers and fragments.

In the design shown in Fig. 1, the radial deflection is concentrated in the hinge region, and is relatively independent of the tire profile. The radial depth of the tire section here may depend largely upon the packing and performance of the inflated spheres. Work underway on another USATACOM contract is planned to show whether the spheres should be relatively free-flowing or whether they should be crowded together as contiguous polyhedrons with relatively little interstitial space. If polyhedral packing is used, changing the radial depth only changes the compressive strains during deflection without any qualitative changes. For flowing spheres, however, a shallow chamber with proportionately large changes in depth in deflection, may limit the flow of the spheres from the compressed region and hence cause higher rolling friction.

In the light of sphere performance and life a wide rim wide tread is indicated, with as low a profile as can be achieved.

7. Removable and Replaceable Treads (Concept B-7)

Army tires may be retreaded several times during their lives, as long as the carcass is sound. In the case of a radial tire, which is dimensionally stable, it may be simpler to put a new tread on by compressing the tire in a pressure chamber, dropping the new tread around it, and allowing the tire to expand into it as the pressure is released.

Different treads can be designed to optimize performance over various terrains, including snow, soft soil, highways, etc. A compromise, all-purpose tread can be supplied for general use. Worn out treads can be replaced and the desired goal of a wheel and tire assembly that will last the life of the vehicle can be approached.

We believe that a simple pressure chamber driven by available air compressors, can be designed for use by semi-skilled labor. This concept would employ jigs and levers for positioning the tread relative to the tire, and sliding it into place. This capability, for replacing treads easily, is inherent with belted sphere-filled tires whose outer diameter is stable and which cannot go flat.

8. Armored Tire (Concept B-8)

Steel, aluminum, ceramic backed with fibreglass, and reinforced plastics have been investigated for armor to stop bullets. As Appendix G, shows, the ceramic facing backed with fibreglass offers the best trade-off of weight for protection. A boron carbide ceramic is the lowest weight, highest cost composition found. It weighs about 6.6 lbs. per square foot of 3/8" thick sheet, and is claimed to stop a 30 caliber armor piercing round. A steel plate of the same thickness is claimed to be equal in performance, but would weigh 15.1 lbs/ft^2.

For several types of polymer reinforced with fibreglass, the V_{50} in feet/second (average velocity just stopped) is about 130 times the weight in lbs/ft^2. A 30 caliber APM2 bullet travelling at 1300 ft/sec is just stopped by a 10 lb/ft^2 plate. This is not much protection against close-up fire, (a Springfield 30.06 bullet at 300 yards travels at 1600-2200 feet/sec.) but would have virtue against fragmentation devices.

Boron carbide washer-shaped plates protecting the inside and outside sidewalls of a low profile 7.00 x 16 tire would weigh about 25 lbs. Hardware for attaching them at will over the tire can no doubt be devised. Aluminum oxide armor would weigh considerably more, but cost much less.

Incorporating such a material into the reinforced polymer sidewalls in Fig. 1 would save weight, but the amount thus saved depends upon the degree to which the ceramic can carry the loads otherwise borne by the reinforced polymer. This remains to be determined.

The radial steel belts are expected to provide considerable protection in the tread areas. The only part of the tire which cannot be protected is the hinge region which extends inward from the tread for about 1-1/2 inches. This small region comprises about 15% of the external area of a tire.

The question of whether the added protection of armor is worth the cost in weight and money probably cannot be answered until we have

tests of the unprotected tire and wheel assembly, and in any event may vary from one tactical situation to the next. For these reasons, detachable armor which can be used or left off as desired, appears to be a viable compromise between built-in armor, or no armor at all.

9. Inflation Gas (Concept B-9)

The rate of diffusion of a gas thru an elastomer film of a given thickness is specific for each gas-polymer combination. For this reason the search for a minimal-diffusion gas would have to be conducted largely by experiment.

The gas to be used in the spheres should have the lowest obtainable rate of diffusion, but it must also be chemically inert vis-a-vis the elastomer. Its liquifaction point must be below the lowest possible ambient temperature, and the gas must withstand high temperatures without degradation.

For any one gas and wall, diffusive loss from the spheres depends upon the ratio of the concentration of its molecules (partial pressure), inside and outside the spheres. This ratio is minimized, and losses are least, when inflation pressures are low and the same gas is used in the spheres and in the atmosphere surrounding them. Since ultimately the surrounding atmosphere is air, which is 80% nitrogen a case can be made for using this gas to inflate the spheres. Nitrogen has a low liquifaction temperature and is inert; its rate of diffusion through polymers is relatively low, however the possibility of finding a better, though more expensive gas, is not precluded. Fluorocarbon gases and the lower boiling Freons are among the candidates that should be evaluated experimentally.

As long as the casing is not ruptured and the gas surrounding its spheres is identical with that in them, no diffusive loss will occur. After the casing is violated, however, there can be a gradual loss of pressure in the spheres, due to diffusion. In order to attain years of operation after the casing has been penetrated, it is proposed to include an inflatable chamber separated from the spheres by a flexible

diaphragm. In Figure 1 the valve is shown and the diaphragm is practically flat against the casing wall. On Pressurizing the chamber through the valve, the diaphragm will balloon outward, pressing against the spheres. Thus pressure can be maintained for the life of the tire.

PROPOSED DESIGN

One embodiment of these concepts is illustrated in Figures 1 and 2. These feature a reinforced plastic wheel, detachable tread, steel radial ply and belts, inflated spheres, and optional armor. Also shown is a wide tread with the rubber part attached to wide-spread rigid sidewalls; this should give maximum stability for cornering and maximum traction.

Figure 2 is to scale for the equivalent of a 7.00-16 tire mounted on a 4.50 EO rim. This assembly conventionally weighs 38.0 lbs. The assembly shown in Figure 2 will weigh very nearly this amount; it might be 2 or 3 lbs. lighter or heavier depending on the final design and the actual densities of the reinforced plastic and the rubber compositions.

Manufacturing appears straight-forward. Two reinforced plastic shapes (A in Fig. 1) are compression molded between matched metal dies, from simple flat sheets, and adhesively bonded together to form the wheel and upper casing. An extruded rope, B, is bonded into the crevice between the two disks, and a rubber diaphragm bonded as shown, to form a pressure chamber.

The elastomeric carcass can be made by wrapping a rubber-fabric inner ply around the outside of a doughnut shaped mandrel, and then winding the steel radial wires radially around the mandrel. Over these are placed, alternately, rubber plies and circumferentially wound steel belt wires. After the carcass is built up, it is cured. The steel coil is then split and the interior part of the "doughnut" is discarded. The mandrel is removed, and the wires shaped and trimmed. A new composition which is a mixture of epoxy and rubber (for better adhesion to both the epoxy wheel and the rubber carcass) is cast and cured over the ends of the wires.

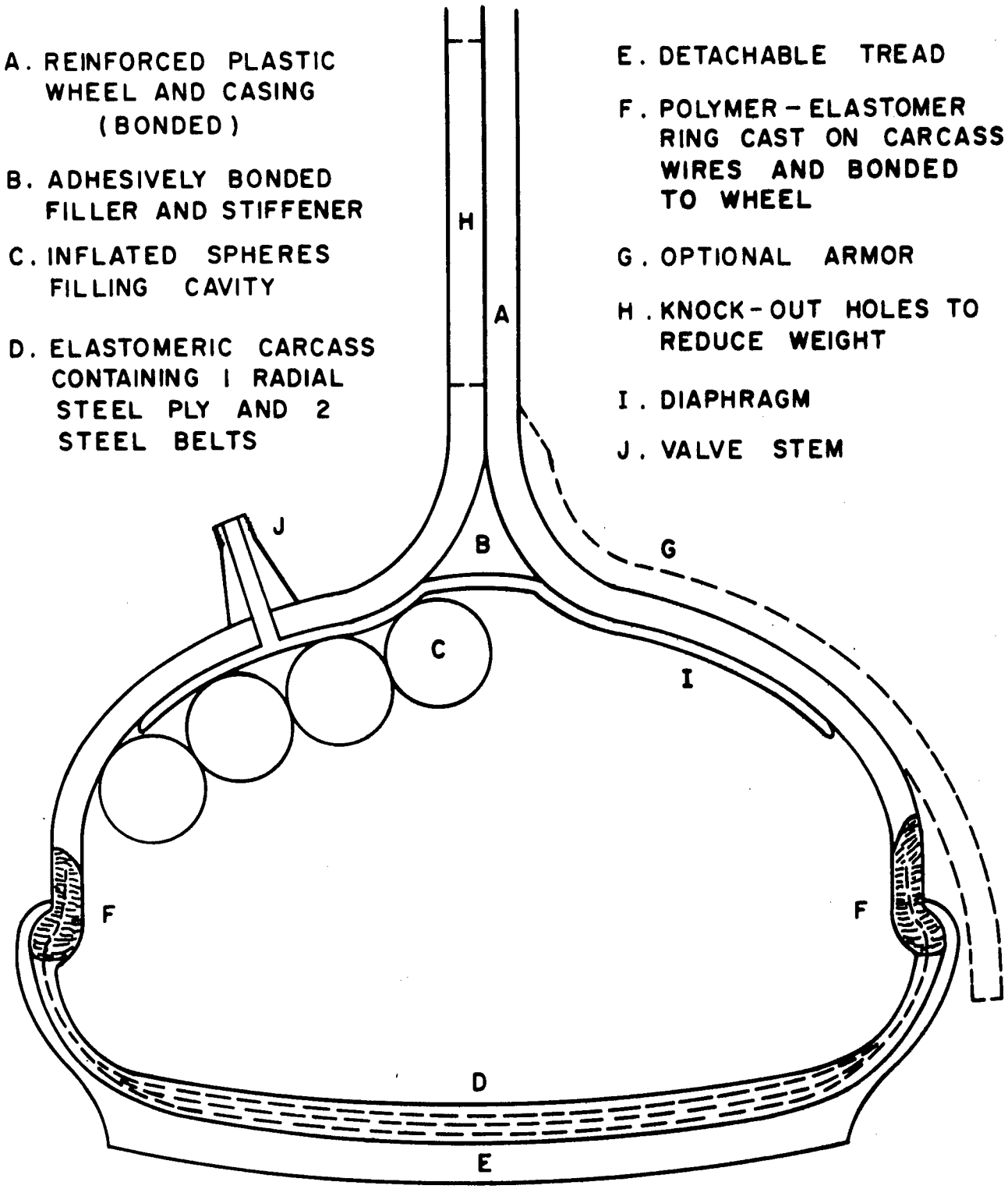

Figure 1. New Concept WTA - Construction

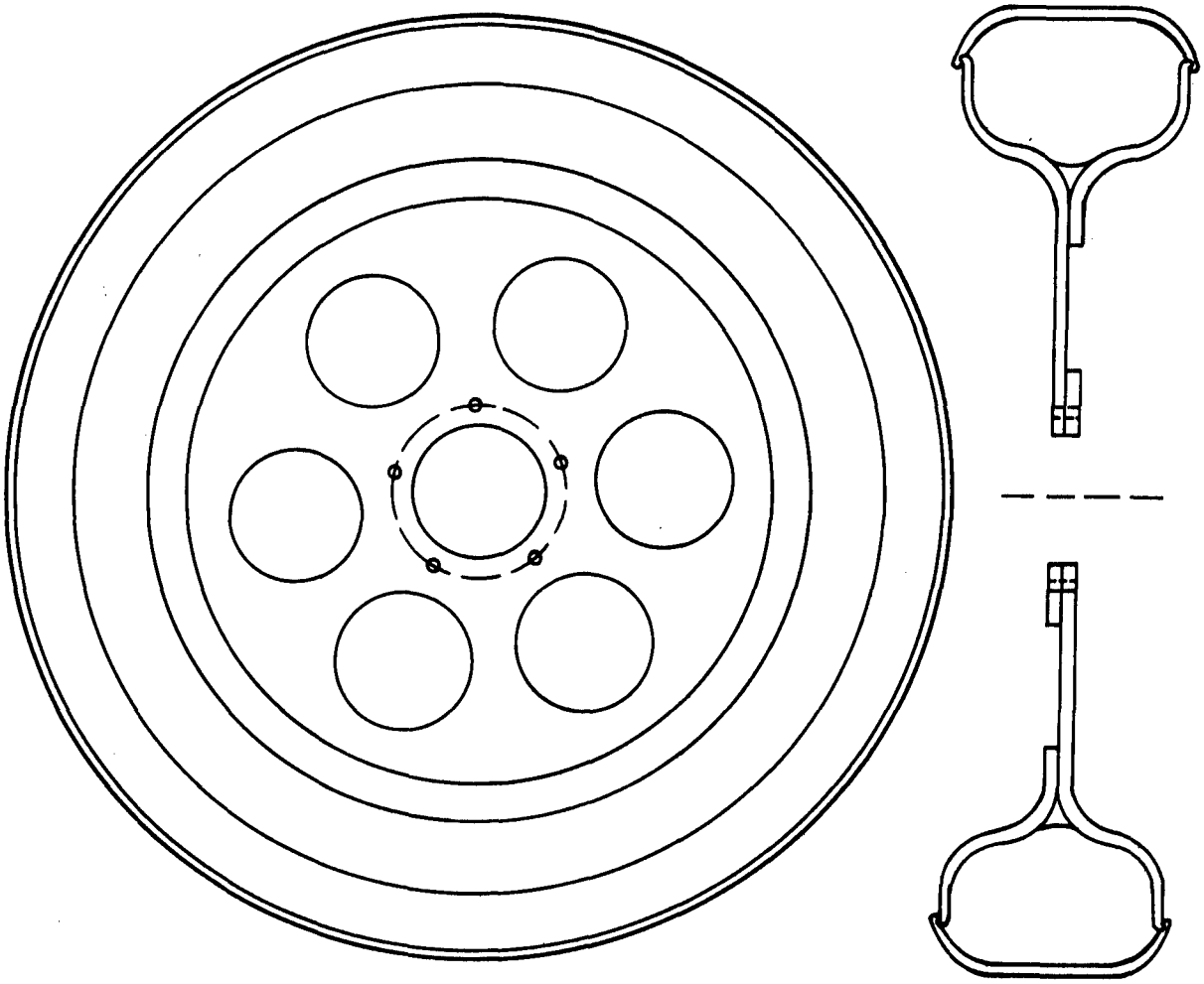

SCALE 1:5

Figure 2. New Wheel and Tire Assembly Design

The wheel and carcass assemblies, in a hypobaric chamber (to reduce pressure of the spheres against the carcass), are filled with inflated spheres and adhesively bonded together. The tread is snapped on, and when the chamber pressure is reduced to one atmosphere, the tread is held snugly.

The process costs of these manufacturing operations should be somewhat less than for conventional wheel and tire manufacture but the materials costs at present are somewhat higher. Since the new designs avoid the necessity for a spare tire or for replacements other than of tread, the new product system will result in appreciable savings to the user.

Provisions for low vulnerability include; (1) protected side walls and steel tread, (2) spheres for running if the structure is violated, (3) hinge to run on if the tread is shot, and (4) the reinforced polymer sidewalls to run on if the hinge wears off.

A P P E N D I C E S

APPENDIX A.

WHEEL AND TIRE ASSEMBLY (WTA) REQUIREMENTS

1. Identification of the WTA

a. The WTA is part of the structural system of the vehicle. Like the chassis, it carries the weight and imposed loads under all conditions.

b. The WTA is part of the comfort system of the vehicle. Like the shock absorbers, torque rods, springs, upholstery, etc. it affects the riding quality.

c. The WTA is part of the drive and brake systems of the vehicle. By coupling the vehicle to the road, it provides traction for acceleration and deceleration, steering (cornering), etc.

d. The WTA vitally affects the military and civilian capabilities of the vehicle. Its cost, weight, repair and/or replacement needs are a logistic burden. Its reliability as a transport for people and supplies under the required conditions limit its logistical capability.

WTA contributions to the vehicles' performance in terms of speed, maneuverability, endurance, transportability, survival in the face of enemy action, and usefulness over diverse terrain strongly affect both the tactical deployment of the vehicle and any strategy in which it plays a part.

e. The WTA as a product of manufacture, puts demand upon the economy for raw materials, labor and its training, process equipment, and transport. Discarded WTAs are a solid waste to be recycled or otherwise disposed of.

2. External Strength and/or Fatigue Loads on the WTA

<u>Radial</u> loads include:

weight of vehicle

centrifugal force of the WTA

vertical component of aerodynamic loading

bouncing due to roughness of road, expansion joints, imbalance of wheel

impacts (falling off curbs, etc.)

military ordnance: airborne bullets and missiles, explosions, etc. (mines, punji sticks)

Lateral loads include:

centrifugal loads due to mass of vehicle when cornering

lateral component of aerodynamic loads

transverse pitch of road, or ruts, bumps, etc.

collision impacts

bumping against curbs, etc.

bullets and missiles, airborne and mines, etc.

Tangential or torque loads include:

acceleration due to engine or collision

deceleration due to engine or collision

friction or grab (rough surface "plowing" or dug-in condition)

axial component of aerodynamic loads

axial pitch of road, or bumps

bullets and missiles (airborne)

3. Rheological and Wear Requirements

WTA as a whole:

spring constant suitable to vehicle, for comfort

elastic (no viscous loss), to minimize heat build up

no resonance with tread, road or imbalance, or transmitted frequencies from the engine

dimensional stability for use in duals

Tread area

deforms locally to accomodate roughness of road, and provide grip

minimum noise on contact with highway

minimum wear due to normal abrasion of rough surface

minimum wear due to cornering, skidding, or braking or starting

maintain traction but not drag on any surface:

hard	smooth	wet	oil
resilient	rough	dry	dust
swampy	bumpy	underwater	snow
loose			ice

switch treads if necessary to operate over all these terrains

4. Environmental Resistance

light, including ultraviolet

temperature, high and low, including internal build up as well as ambient

abrasion by flying sand, curbs, etc.

bullets and missiles

ozone, SO_2, oils, vapors, dust

fire (must not endanger vehicle)

5. Logistic Requirements

low cost

light weight

non-critical materials

safe to handle, demount and replace

long life on vehicle

long shelf life when packaged

interchangeability of WTA and of treads on WTA

salvageable, disposable or reusable as raw materials, for making more WTAs or other products

retreadable as long as the WTA is structurally sound

tread interchangability for various terrains is desirable, especially since the tire cannot be partially deflated.

APPENDIX B

DESIGN OF A REINFORCED PLASTIC WHEEL SECTION

Substitution of a fibre reinforced plastic for a pressed steel wheel requires a look at the expected working stresses of the wheel while in use. The large differences in mechanical properties between steel and reinforced plastics implies a need for a simplified model study to help in proportioning the wheel sections for reasonable working stresses without weight penalty.

Simple hand calculations of the stresses for the wheel loadings expected would not yield reasonable results. Fortunately, a Franklin Institute Research Laboratory (FIRL) Structural Analysis Program No. 52-7, Finite Element Analysis Program (FELAP) was available for use. The simple wheel section shown in Figure A, was chosen for analysis. It consists of a plane disk with a mounting hole in the center, and a rim section around the outside diameter.

For the purposes of the design example, the disk mounting hole is 4.16 inches in diameter, the wheel outside is 18 inches in diameter by 5 inches wide. The plastic thickness was assumed to be uniform at 0.5 inches. The disk was assumed rigidly clamped at the 4.16 diameter. A uniform tire pressure of 35 psi was applied on the rim O.D. The vehicle loading was assumed at 1500 lbs. It was assumed that this loading was transferred by the rubber spheres to approximately a six inch section (40°) of the rim acting perpendicular to this surface throughout the area of 30 square inches. Finally it was assumed that a side loading (skid load) was applied to the rim uniformly along the 40° arc length. Computer rims for the following combination loadings were accomplished:

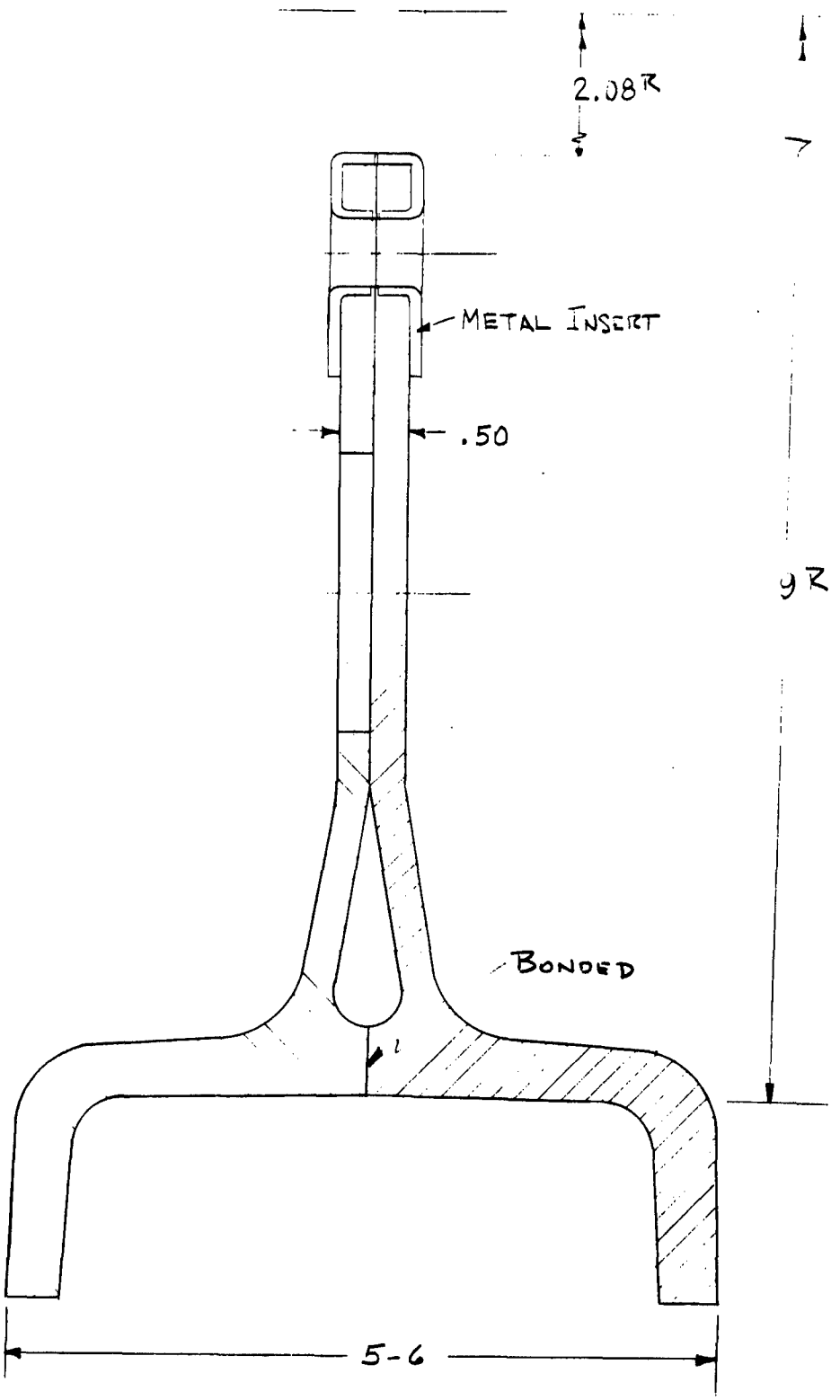

Figure A. Model

(A) Vehicle load 1G, Skid load 0.5G

(B) Vehicle load 2G, Skid load 1.0G

(C) Vehicle load 2.5G, Skid load 1.25G

Material properties were assumed as 5×10^6 tensile and compressive moduli, Poisson's Ratio 0.48.

For the purposes of this analysis, a coarse gridwork of elements was used for computer input. The wheel was divided into radial sections, with a finer division (5° Angular) used in the highly loaded area. The disk was divided into three circular sections, equally spaced from the 4.16 I.D. to the center of rim (17.5 Diameter). The rim itself was divided into two symmetrical halves. A total of 85 segments or panels was used in this simplified model. A greater number of panels (smaller in size) will, of course, yield more accurate results.

Output From Computer Program

Stresses and deflections are obtained at the *MIDPOINT* of each panel as an important portion of the output data. For example the maximum load case W - 2.5G = 3750 lb, Skid load - 1.25G = 1825 yielded the following:

Panel A_o maximum stress at midpoint 6000 psi (tensile) in direction 1 of system coordinate 0_D

Panel A_I maximum stress 8000 psi (compressive) in direction 1 of system coordinate 0_D

Panel A_M maximum stress at midpoint 100 psi (comp) direction 1, coordinates 0_D

In the middle panels $B_{0,I}$, significant stresses in two directions, 1 (radial) and 2 (hoop) were encountered:

B_I, S = 1690 psi compressive, direction 1

B_0, S = 2300 psi tensile, direction 2

In the outer disk panels, $C_{O,I}$ stresses were as follows:

C_I, S = 1000 psi tensile, direction 1

C_O, S = 2800 psi compressive, direction 1

The rim panels R and Q use coordinate system O_R Stresses were as follows:

Panel R_I, S = 3790 psi, compressive, direction 1 (system O_R)

R_o, S = 4110 psi, tensile, direction 1

Q_I, S = 2290 psi, compressive, direction 1

Q_o, S = 2650 psi, tensile, direction 1

Numerous other data were obtained, but only the essence is listed here. Shear stresses which are also a part of the output, for example, were generally 200 psi or less, which is desirable for this type of fibre reinforced plastic.

Discussion Of Results

The stress levels, (8000 psi) obtained indicate that a thickness close to 0.5 is a reasonable design. The model used had a relatively low number of panels or finite elements and does not give the absolute maximum stresses in the plastic wheel at the points of maximum strain. While the stress concentrations around the hub bolts have not been calculated, the allowable tensile strength of a non-continuous glass reinforced epoxy with 1 inch fibre length is 30 to 40,000 psi, so that the factor of safety is considered conservative.

An example of a proposed fibre reinforced plastic wheel is shown in Figure B. The relative thicknesses shown are a result of the preliminary model study. The hub uses metal reinforcing around the bolt circle, and the wheel itself is in two pieces bonded together. Lightening holes are spaced alternately in the low stress level area. The estimated weight of the wheel is 11.2 pounds compared to 19.5 pounds for a metal wheel. Lighter plastic sections might be recommended following more extensive stress modeling, fatique analysis, or actual field testing.

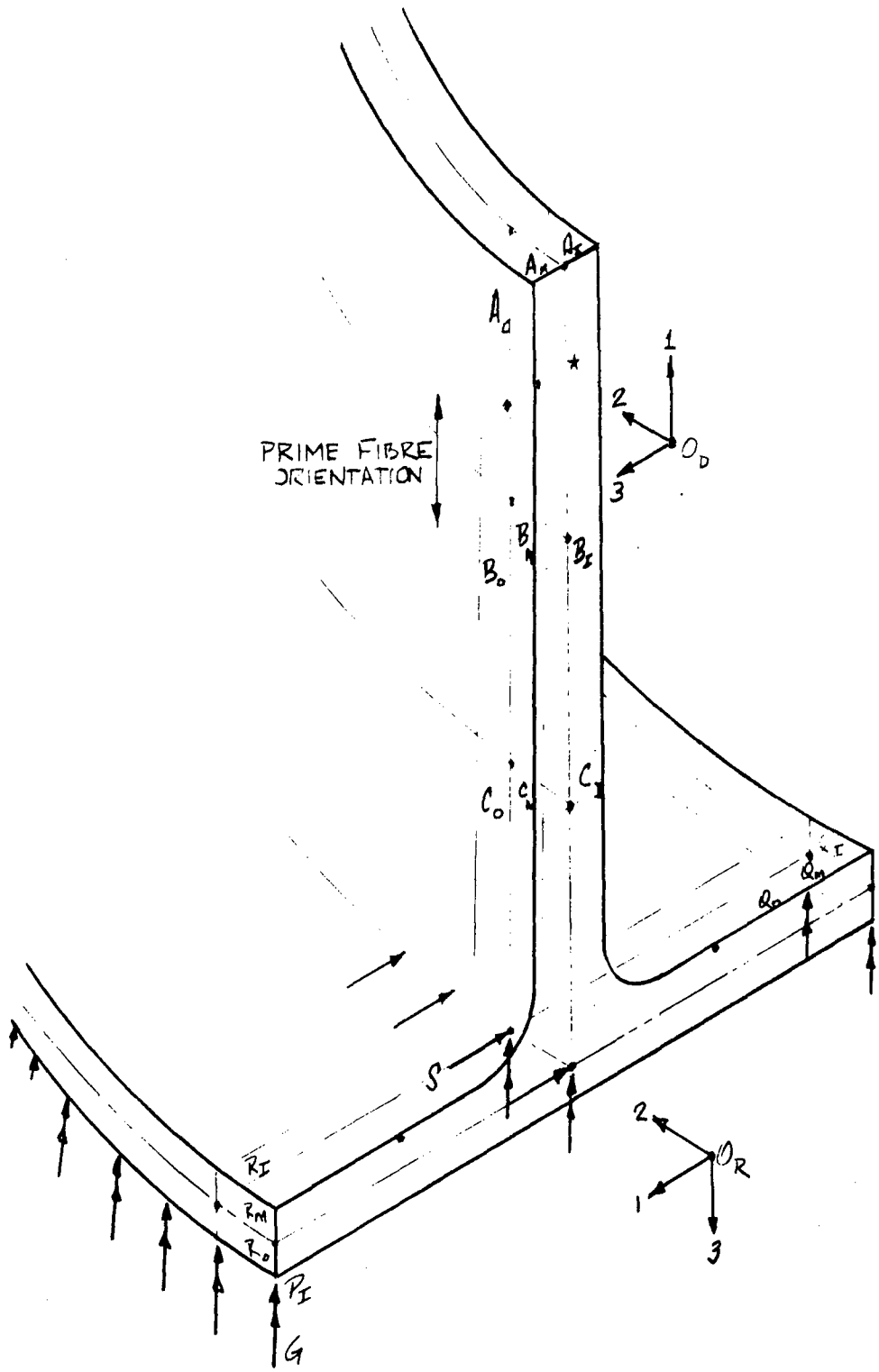

Figure B. Design

APPENDIX C

METHODS OF MOLDING

Introduction

The purpose of this study was to survey and to evaluate reinforced plastics molding methods, and determine which were applicable to the manufacture of our wheel and tire assembly (WTA). Some ideal prerequisites of such a molding process include:

(1) Reproducibility of

(a) The molding's dimensions

(b) The molding's qualities (e.g., high tensile strength and modulus, high flexural strength and modulus, high impact strength, no voids).

(2) Ability of molding process to handle high reinforcement/resin ratio.

(3) Low cost of equipment and materials.

(4) Automation (if economically desirable).

(5) Rapid cycling of molds

(a) Short molding time.

(b) Rapid curing time.

(6) Simplicity.

(a) Little training required of hand labor.

(b) Inexpensive and rapid maintenance of equipment.

(c) Easy and safe handling of materials during the molding process.

(7) The molding process must be able to produce the desired shape.

Molding Possibilities

Descriptions

Calendering, blow, pultrusion, extrusion, filament winding and drawing, centrifugal casting, and rotational molding methods were immediately eliminated as possibilities because they are restricted to thermoplastics and/or are limited by the shaped moldings they produce.

Several molding methods are currently in use for the fabrication of thermosetting reinforced plastics*. These methods include (1) compression molding using matched metal dies (MMD), (2) transfer molding, (3) jet molding (injection molding of thermosetting materials), (4) spray up molding, (5) autoclave bag molding, (6) vacuum bag molding, (7) matched molds using no pressure and, (8) hand lay-up. The processes involved with each method are briefly described as follows:

I - Compression Molding Using MMD

A- Premolding possibilities

(1) Preforms

(a) The reinforcing material is chopped into appropriate lengths.

(b) The cut lengths are then carried by air suction and deposited on a porous screen of the shape required.

(c) Either a powdered or wet binder is applied to the preform to hold it together.

(d) The preform is placed in a curing oven at 120-200° C. for 3-5 min.

(e) The preform is removed from the screen and placed in the mold.

(2) Mats

(a) Patterns are cut from a sheet of a nonwoven reinforcing material.

(b) The patterns are laid layer by layer in the mold.

(c) Resin is applied.

*Variations of these methods are also in use, but will not be discussed.

(3) Premixes

(a) Reinforcement material, catalyzed resin, and filler are combined in a dough-type mixer.

(b) The mixture is placed in the mold.

(4) Prepreg

(a) Reinforcing material which has been preimpregnated with a catalyst resin is cut into patterns or chopped squares.

(b) The patterns or squares are partly cured and placed in the mold.

B- Molding Process

(1) The compound to be molded may be predried to drive off volatiles and water.

(2) Following predrying may be preheating which delivers the compound to the mold at near-mold temperature.

(3) The proper amount of resin is put in the mold cavity. (This step is not necessary with prepregs.)

(4) Matching male and female molds are closed.

(5) Pressure of 100-800 psi is applied.

(6) The temperature of the system is raised to 235-380°F.

(7) After a short time elapse, the molding has cured, and the cycle is complete.

II- Transfer Molding

(1) Preheating and predrying operations may be carried out on the material to be molded.

(2) The preweighed material charge is plasticized.

(3) The charge is placed in the transfer pot above the mold cavity.

(4) A transfer plunger enters the pot, forcing the molten material through an orifice into the closed mold.

(5) The plunger and mold are kept under pressure and heat to allow curing.

(6) The mold may be cooled by circulation of a cooling fluid.

III- Jet Molding

(1) Plastic, usually in a pellet form, is placed in the injection chamber.

(2) The plastic is heated to a molten state.

(3) The fluid is injected by a plunger, screw, or ram into the mold cavity.

(4) The mold is chilled by circulation of a cooling fluid.

IV- Spray Up Molding.

(1) Reinforcing material is chopped into appropriate lengths.

(2) Resin is sprayed from one nozzle and reinforcing material is sprayed from another, mixing before adhering to the single mold surface.

(3) Curing is achieved at room temperature and at atmospheric pressure.

V- Autoclave Bag Molding

(1) Each sheet of reinforcing material is laid in the single mold and covered with resin.

(2) This process is repeated until a laminate of the proper thickness is achieved.

(3) A flexible film is placed over the lay-up.

(4) A vacuum is created between the lay-up and the film.

(5) This setup is put into an autoclave.

(6) Heat and 100-200 psi pressure are added.

VI- Vacuum Bag Molding

The procedure in this method is identical to the first four steps in autoclave molding. The molding cures at room temperature and atmospheric pressure.

VII- Matched Molds Using No Pressure

(1) Glass mat or cloth is laid on a thin sheet of protective material (e.g., cellophane).

(2) Resin is applied.

(3) The application of glass followed by resin is repeated until the laminate reaches the specified thickness at which time a second protective sheet is placed on the surface.

(4) The lay-up is then sandwiched between two matched mold halves.

(5) The lay-up is permitted to cure at room temperature and atmospheric pressure.

VIII- Hand Lay-up

The procedure in this method corresponds to the first two steps of the autoclave bag method. Curing is achieved at room temperature and atmospheric pressure.

Advantages and Disadvantages for each method.

I- Compression Molding Using Matched Metal Dies.

A- Advantages

(1) High strength. (5)

(2) High quality. (5)

(3) Lower long-term cost. (5)

(4) Quality control (identical pieces). (5)

(5) Heat and pressure for curing is easily controlled. (5) (1)

(6) Die pinch offs provide trim edges, thus avoiding manual labor. (5)

(7) Automated process. (5) (1)

(8) Ideal for the production of products which require resistance to heat. (2)

B- Disadvantages

(1) Molds must be designed for effective charge containment at molding pressures. (6)

(2) Molds must be designed without many or much of an undercut. (6)

(3) Large production volumes must be present to justify large capital investment. (6)

(4) Not practical for intricate products where complicated molds are required. (2)

(5) Internal stresses developed by reinforced plastics materials tend to distort or break small mold components. (2)

II- Transfer Molding

A- Advantages

(1) Faster molding cycle than in compression molding. (2)

(2) Parts with complex part design involving cores, undercuts, and moving-die parts are best adapted to this method. (2)

(3) Little or no flash with this method, and therefore, less finishing is required than in compression molding. (2)

B- Disadvantages

(1) Considerable loss of material in the transfer pot. (2)

(2) Physical properties may decrease (20-30%) when transfer molded as compared to compression molding. (2) (7)

(3) Usually restricted to molding small intricate parts. (2)

(4) Material to be molded must be highly plastic. (2)

III-Jet Molding (Injection Molding)

A- Advantages

(1) Fast. (2)

(2) Economical. (2)

(3) Capable of molding intricate as well as simple articles. (2)

B- Disadvantages

(1) Cooling of the mold must be rapid and heating must be rapid. (5)

(2) The plastic must be fluid enough to permit injection. (2) (5)

IV- Spray Up Molding

A- Advantages

(1) Requires only 1/4 the labor of hand lay-up. (3)

(2) Excellent stiffness. (3)

(3) Excellent strength. (3)

(4) Method can be used to make all but very small complicated forms. (3)

(5) Fast setting resins can be used. (3)

(6) Finished moldings consist of less than 1% voids. (3)

(7) More uniform deposits compared to hand lay-up. (7)

(8) Faster application compared to hand lay-up. (7)

(9) More automated than hand lay-up. (5)

B- Disadvantages

(1) Variation in finished material thickness. (5)

(2) Mixes to be sprayed are often thixotropic. (7)

(3) Resin must be catalyzed and accelerated to effect cure at room temperature, and therefore, has a limited pot life. (7)

(4) If resin, catalyst, and reinforcement are mixed inside the gun, the mixture may become too viscous. (7)

V- Autoclave Bag Molding

A- Advantages

(1) Higher percentage of reinforcement than vacuum bag molding. (5)

(2) Better moldings than vacuum bag molding. (5)

(3) Rapid cycling of molds. (3)

(4) Low void content. (3)

(5) Good strength/weight ratio. (3)

B- Disadvantages

(1) The size of parts to be molded are limited by the autoclave size. (5)

(2) Not automated. (5)

(3) Cost of autoclave. (5)

VI- Vacuum Bag Molding

A- Advantages

(1) Higher strength compared to hand lay-up. (5)

(2) Uniform strength compared to hand lay-up. (5)

(3) Better surface on finished side compared to hand lay-up. (5)

(4) Many contours and various shapes can be molded. (3)

(5) Relatively inexpensive tooling. (3)

B- Disadvantages

(1) Requires hand spackling to yield void-free product. (3)

(2) Only one finished surface. (3)

(3) Not automated. (5)

VII- Matched Molds Using No Pressure

A- Advantages

(1) Two smooth surfaces. (7)

(2) High quality. (7)

(3) Void free laminates. (7)

B- Disadvantages

(1) Little increase in production rate over hand lay-up. (7)

(2) Difficult to apply sheet materials to molds having double curvatures. (7)

(3) Not automated. (7)

VIII- Hand Lay-up

A- Advantages

(1) Requires minimum of equipment. (5)

(2) Requires inexpensive molds. (5)

(3) Simple method. (5)

(4) Ideal for prototypes. (5)

B- Disadvantages

(1) Loss of accuracy of dimensions. (5)

(2) Loss of finished interior and exterior surfaces. (5)

(3) Loss of consistent cure. (5)

(4) Loss of elimination of post-molding voids. (5)

(5) Quality of molding varies with the skill of the operators. (7)

(6) Slow process. (7)

(7) Requires large labor force. (7)

(8) Cost of mat is more than the cost of roving. (7)

(9) Not automated. (5)

Discussion

A high percentage glass/resin (60-80% glass) ratio seems necessary for the high strength qualities (4,8) required in the wheel-tire assembly (WTA). The high viscosity resulting from a high glass/resin ratio indicates that molding methods which require the thermosetting materials be in a highly molten and/or rapid flowing state are not as feasible as other methods. Jet molding and transfer molding were, therefore, eliminated as possibilities for this project.

Those molding methods involving the relatively slow hand lay-up procedures (7) (i.e., vacuum bag, matched molds without pressure, and autoclave molding) would not be practical for rapid mass production, but might suffice for prototype manufacture. These methods also require hand labor forces in that phase of the process, thus raising input costs.

The resin-rich and resin-starved areas (7) and the variation in the finished material thickness (5) which are apt to occur in spray up molding would affect the molding's qualities and reproducibility; hence this method was not considered further.

The remaining molding method, compression molding using MMD, seems to be the most suitable method for economic and rapid large scale production of the WTA. The advantages of this method coincide reasonably with the ideal molding prerequisites listed previously

Premolding methods in compression molding using MMD.

With MMD molding, an additional decision must be made as to which of the premolding techniques is better suited for the WTA; preform, MAT, premix, or prepreg.

Preform

Descriptions

Preforms can be made by three methods, plenum, directed-fiber, and slurry, they are briefly described as follows:

(1) Plenum

(a) Glass rovings are cut and fall into a plenum chamber.

(b) The preform screen is rotated.

(c) A vacuum condition in the chamber pulls the cut rovings evenly around the screen.

(d) Starch water or modified resin is sprayed onto the preform.

(e) The preform is partly cured in an oven for 3-5 min.

(f) The preform then removed from the screen and placed in the mold.

(2) Directed-Fiber Method

(a) Cut glass is blown onto a screen from hoses.

(b) A binder is then sprayed on the preform.

(c) A curing oven is lowered on the entire set-up.

(d) The preform is removed from the screen and placed in the mold.

(3) Slurry Method

(a) Chopped glass fibers are suspended in an emulsion of cellulosic fibers.

(b) Glass fibers are deposited on a screen as water is removed from the bottom of the tank.

(c) The screen is raised, and excess water is sucked out.

(d) The preform is then partly cured in an oven.

(e) The preform is removed from the screen and placed in the mold.

Preform Analysis

The plenum method is recommended for easily handled parts, parts with many contours, and parts with walls of uniform thickness. (3)

The directed fiber method is recommended for large preforms (e.g., automobile bodies) and parts with uniform wall thickness. (3)

The slurry method costs more than the other two preform techniques, but is faster and more automatic. It is also better suited to forming parts with intricate shapes and variable wall thickness. (3)

Some of the problems resulting from molding using preforms are (7):

(1) Inclusion of air.

(2) Preforms breaking apart and moving during the molding operation.

(3) Resin-starved areas due to excessive glass.

(4) Short moldings and areas of gelled resin due to too-rapid curing in relation to press closing.

(5) Resin cracking.

(6) Resin-rich areas.

MAT

In MAT molding cut patterns are substituted for preforms. Limitations resulting from the use of MATS are as follows (7):

(1) Use only with easy curves.

(2) Restricted to molds where simple or no tailoring is required.

(3) Danger of there being excess glass where overlapping of the MAT occurs after tailoring.

Premix

The premix method yields products with (3):

(1) Dimensional stability.

(2) Weather resistance.

(3) Stable dielectric properties.

(4) High impact strength.

(5) Good contours at low molding pressures.

This method, however, results in some loss of the part's physical strength. In dealing with high glass/resin ratios, the thixotropic mixture might create additional molding problems.

Prepreg

The prepreg method seems to be the best of the premolding techniques for the following reasons (2):

(1) High and more uniform strength in the finished product.

(2) Uniform quality in finished products (resin content can be controlled to $\pm$ 2%).

(3) Simplified production.

(4) Design freedom.

(5) Easy handling.

(6) Prepregs are possible with a reinforcement content ranging from 20-85%.

(7) Handling and molding characteristics (e.g., resin flow, gel time, tack and drape) can be controlled by regulating the temperature of the drying oven, speed of travel, resin type and content.

(8) Prepregs can be made using resins whose viscosities are too low to be handled by wet lay-up techniques.

(9) Resin calculations, mixing, and applying are eliminated.

(10) Little air is trapped in the plastic since the reinforcement is thoroughly saturated during preimpregnation.

(11) Scrap prepreg loss can be minimized by macerating or chopping leftover prepreg to form molding compound or squares.

(12) Prepregs offer advantages in molding odd shapes with varying thickness, undercuts, flanges, etc. because the resin is already properly distributed throughout the reinforcement.

(13) Minimize press time by pre-assembling the complete lay-up in advance of molding.

(14) Preclude the problems of excessive resin flow, resin-rich areas and resin starved areas.

Glass fiber prepregs are available in the form of rovings, cloth, and mats. Properties of glass prepregs include (2):

(1) Outstanding strength to weight characteristics.

(2) High tensile strength.

(3) High modulus of elasticity.

(4) Resilience.

(5) Excellent dimensional stability.

Properties of epoxy prepregs include (2):

(1) High mechanical strength.

(2) Excellent dimensional stability.

(3) Corrosion resistance.

(4) Inter laminar bond strength.

(5) Good electrical properties.

(6) Very low water absorbtion.

Conclusions

The recommended molding method for the large scale production of the wheel and tire assembly is compression molding using MMD; this method should be preceded by preimpregnating a mat or cloth with the desired resin or purchasing a ready made prepreg.

Such a process might be diagramed thusly:

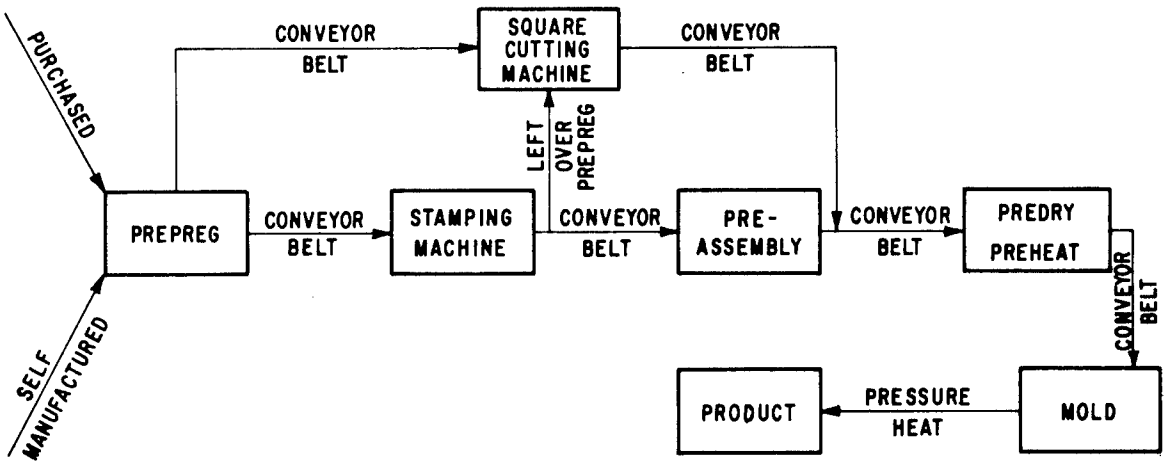

A continuous conveyor belt could be used for transporting the various materials to the mold, effectively minimizing hand labor. Scoop prepreg could be reduced by chopping squares from leftover materials and feeding them into the mold.

The production of prototypes might be achieved by using one of the hand lay-up methods.

Literature Cited

(1) Begeman, Myron L. and B. H. Amstead. 1963. Manufacturing Processes. 5th ed. John Wiley and Sons, Inc., New York, London, and Sydney.

(2) Clauser, H. R. (ed). 1963. The Encyclopedia of Engineering Materials and Processes. Reinhold Publishing Corporation, New York.

(3) Duffin, D. J. 1966. Laminated Plastics. 2nd Ed. Reinhold Publishing Corporation, New York.

(4) Gamble, Norman L. 1967. Molded Aircraft Wheels of Epoxy Resin Reinforced with Noncontinuous Glass Filaments. SPE 23(1).

(5) Jacolow, Melvin F.(ed). October 1968. Modern Plastics Encyclopedia. Vol. 45. McGraw-Hill, Inc., New York.

(6) Kralovec, Wm. 1969. Equipment Specification for Matched Die Molding. 24 Annual Technical Conference, Reinforced Plastics/Composites Division. The Society of the Plastics Industry, Inc.

(7) Morgan, Phillip(ed). 1961. Glass Reinforced Plastics, 3rd ed. Interscience Publishers, New York.

(8) Scheffler, Lewis F. 1967. Why Use Whiskers in Plastics? 22nd Annual Technical Conference, Reinforced Plastics Division. S.P.I.

APPENDIX D

REINFORCED POLYMER COMPOSITES

Introduction

The objective of this study was to survey and to evaluate materials for reinforced plastics, and determine which are applicable for our wheel and tire assembly. In choosing materials for reinforced plastics, two fundamental questions arise: (1) which resin system provides the desired qualities and (2) which reinforcement filler best combines with this resin to yield a product with properties which approach or surpass those of steel. Steel was chosen as a level of comparison because wheels which are functioning satisfactorily are manufactured from this material.

Resin Systems

The properties of epoxy, polyester, phenolic, silicone, and polycarbonate resins were investigated.

It can be seen from Table 1 that the mechanical properties (i.e. tensile strength, tensile modulus, compressive strength, flexural strength, flexural modulus, and impact strength) of the silicone and polycarbonate composites are lower (≃15-65%) than the epoxy, polyester, and phenolic composites. The silicone resins are recommended (2) for their resistance to temperature extremes, resistance to weathering/and oxidation, good dielectric properties, excellent water resistance and outstanding adhesive properties. Polycarbonate resins are recommended (4) for their excellent dimensional stability, flame resistance, and good optical properties. The relatively inferior mechanical properties of these resin systems coupled with their possible reaction with organic solvents, however, makes them unsatisfactory for use in our WTA.

Table D-1
COMPARISON OF RESIN SYSTEMS

PROPERTY	(8,4) EPOXY Glass	(8,4) EPOXY Glass Mat	(8,4,) POLYESTER Glass Cloth	(8,4,) POLYESTER Asbestos Filled	(8,4,) POLYESTER Glass Cloth	(8,4,) PHENOLIC Glass Mat	(8,4,) PHENOLIC Asbestos Filled	(8,4,) SILICONE Glass Cloth	(4,) POLYCARBONATE 40% Glass Filled	STEEL AISI 1020
Specific Gravity	1.9-2.0	1.8-2.0	1.5-2.1	1.6-1.9	1.8-2.0	1.7-1.9	1.7-1.9	1.6-1.9	1.5	7.86
Tensile Strength 10^3 psi	20-60	14-30	30-70	30-60	40-60	5-20	40-65	10-35	18	90
Tensile Modulus 10^6 psi	2-4	1-3	1-3	1-3	1-3	---	2-5	1-2	1.7	30
Compressive Strength 10^3 psi	50-70	30-38	25-50	30-50	35-40	17-26	45-55	25-46	17	---
Flexural Strength 10^3 psi	70-100	20-26	40-90	50-70	65-95	10-60	50-90	10-38	26	---
Izod Impact Strength ft. lb/in nocked	11-26	8-15	5-30	2-8	10-35	8-16	1-6	5-13	5	50-60 (Charpy)
Heat Resistance °F.	300-500	330-500	300-350	300-450	350-500	350-500	350-600	400-700	275	---
(Seconds) Arc. Resistance	100-110	110-125	60-120	100-140	20-130	40-150	120-200	150-250	5-120	---
Vol. Ratio, Plastic/Steel	4.1-3.9	4.3-3.9	5.2-3.7	4.9-4.1	4.4-3.9	4.6-4.1	4.6-4.1	4.9-4.1	5.2	
H_2O Absorbtion % 24/Hr 1/8" Thick	0.05-0.2	*	0.05-0.5	0.14	1.0-2.0		*	0.1-0.2 *	0.14	
Burning Rate	Self Ext.	*	Conv. Burn Fire Retard Self Ext.	Self Ext.	Slow		*	Self Ext. *	Self Ext.	None
Effect of Sunlight	Slight	*	Slight	None	Darkening		*	None to slight *	Slight Embrittlement & color change	None
Effects of Weak Acids	None	*	Depends on Formula	None	None to slight		*	None to Slight *	None	
Effect of Strong Acids	Negligible	*	Slight		Decomposed by Oxidizing Resistant to Reducing		*	Slight *	Attacked by Oxidizing	
Effect of Weak Alkalies	None	*	None		Slight to Marked		*	None to Slight *	Limited Resistance	
Effect of Strong Alkalies	None	*	Slight		Attacked		*	Slight Marked *	Attached	
Effect of Organic Solvents	None	*	None		Fairly Resistant on bleed-proof material		*	Attacked by some *	Soluble in Clorinated Hydrocarbons	None
Thermal 10^{-5}/°C Expansion	1.1-3.5	*	1.5-3.0	---	1.5-3.5		*	0.8 *	1.7-4	0.67
Flexural Modulus 10^6 psi	2.5-4.5	*	---	---	0.3-0.5		*	--- *	---	
	*Glass Fiber Filled				*Wood Flock Cotton Filler			*Glass Fiber Filled		

The qualities of the phenolic resins include excellent insulation, chemical, water, flame and heat resistance (2). They are also reported as being 10-25% cheaper than polyesters, and have good mechanical properties as can be seen in Table 1. The extreme brittleness, necessity of high curing pressures, slow curing time compared to polyesters, required low temperature storage, maximum 90-day shelf life, and limited color range (2) indicate, however, that the phenolics are impractical for use in this project.

The excellent mechanical properties (Table 1); heat, weather, and fire resistance; ability to be readily colored; and fast exothermic curing are advantages for using polyester resins (4). Physical properties of polyester castings, however, are not outstanding, and volume shrinkage often accompanies the curing process (1). The possible acid, alkali, and organic solvent attack (Table 1) should also be considered before using this resin.

Of the five resins studied, epoxy seems to be the most likely candidate for the W.T.A. Epoxy resins provide excellent physical, mechanical, thermal, and chemical qualities (Table 1); low shrinkage during cure (1) is also a favorable asset, as is its high resistance to most acids, caustics, alkalies, and solvents (2). An outstanding property of epoxy resin is its exceptional adhesive quality (2). This adhesiveness could present a problem in molding, but with a proper releasing agent, troubles should be avoided. One disadvantage in using epoxies is that they tend to be relatively expensive (65¢/lb. (1).

Reinforcement Fillers

The list of reinforcement fillers which were examined includes asbestos, boron, boron nitride, carbon, E-glass, S-glass, graphite, and silicon carbide.

Comparison of fillers in Table 2 leads one to the conclusion that boron, graphite, and silicon carbide have higher strength and modulus values than the other materials. These fillers belong to the class of reinforcements known as whiskers which are the strongest known fibers in existence today (8).

For example, U. S. Polymeric Inc. reports of an epoxy (E-715) high modulus graphite laminate (6 ply 35% DRC) with the following mechanical properties at room temperature:

Tensile strength	$\times 10^3$ psi	133
modulus	$\times 10^6$ psi	34
Flexural strength	$\times 10^3$ psi	140
modulus	$\times 10^6$ psi	33
Specific gravity, g/cc		1.68
Hardness (Barcol)		58

The costs of these fibers, however, are at present prohibitive.

Carbon fibers offer stiffer, yet lighter weight objects than any other synthetic or natural material of the same weight (3). The cost of carbon, however, seems sufficiently high to make it impractical for use in our wheel and tire assembly (Table 2).

Boron nitride was also considered to be too expensive, and its strength and modulus values were found to be inferior to those of other fillers (Table 2). Boron nitride is usually used for its high electrical resistance combined with its low loss and good thermal conductivity and stability (8).

The tensile strength of asbestos (Table 2) is only 40% of that reported for E-glass. Although the tensile modulus is considerably higher, asbestos was not believed to contain the strength necessary for the WTA. Asbestos is, however, used in combination with glass (7) to

Table D-2

COMPARISON OF REINFORCEMENT FIBER AND WIRE

Fiber/Wire	(8) Specific Gravity	(8) Melting Point °F.	(8) Tensile Strength 10^3	(8) Tensile Modulus 10^6	(5, 8, 6,) Cost $/lb
Aluminum	2.70	1,220	90	10.6	---
Asbestos	2.50	2,770	200	25	---
Beryllium	1.84	2,343	190	44	---
Boron	2.30	3,812	500	64	$1000/lb
Boron Nitride	2.20	5,432	125	10	$175/lb
Carbon	2.50	6,700	500	29	$35/lb
E-Glass	2.54	2,400	500	10.5	$1/lb
S-Glass	2.49	3,000	700	12.4	$2.50-$10/lb
Graphite	1.50	6,600	250-400*	25-74*	$550/lb
Silicon Carbide	3.22	4,892	400-2000*	60-120*	$250/lb
Steel	7.87	2,920	600	29	$25/lb(Fibers)
Titanium	4.72	3,035	280	16.7	---
Tungsten	19,30	6,170	620	58	---

*Range of values was adapted from references 5, 8, 6).

give added heat and chemical resistance (8). The strength of the resulting mixture is somewhat lower as is the cost (7).

S-glass has approximately 30% greater tensile strength and approximately 15% greater tensile modulus than E-glass. The cost of S-glass, however, is 2-1/2-10 times that of E-glass (Table 2).

E-Glass - Epoxy Composite

U. S. Polymeric Inc. reports E-glass fabrics combined with epoxy have the following range of properties:

Tensile strength,	psi X 10^3	47-77
Modulus,	psi X 10^6	3.5-4.6
Compressive strength,	psi X 10^3	71-52
Modulus,	psi X 10^6	3.6-3.9
Flexural strength,	psi X 10^3	67-83
Modulus,	psi X 10^6	3-4

Conclusions

Epoxy resins were found to have the best properties which might be of importance in the W.T.A. Several specific epoxy systems supplied by U. S. Polymeric, Inc. are currently under investigation.

It is recommended that one of the E-glasses with high tensile strength, modulus, and impact strength be combined with the chosen epoxy resin. Prototypes should then be made, and tests run to determine if this combination is adequate. If the E-glass does not suffice, it is suggested that an S-glass be substituted.

LITERATURE CITED

(1) Clauser, H. R. (ed). 1963. The Encyclopedia of Engineering Materials and Processes. Reinhold Publishing Corporation, New York.

(2) Duffin, D. J. 1966. Laminated Plastics. 2nd Ed. Reinhold Publishing Corporation, New York.

(3) Guntson, W. T. Feb. 1969. Carbon Fibers. Science Journal.

(4) Jacolow, M. F.(ed). October 1968. Modern Plastics Encyclopedia. Vol. 45 McGraw-Hill, Inc., New York.

(5) Oswitch, S. Aug. 1967. A Survey of Materials for Reinforced Plastics. Reinforced Plastics.

(6) Scheffler, L. F. April 1967. Why Use Whiskers in Plastics? Reinforced Plastics.

(7) Asbestos as a Reinforcement. Reinforced Plastics.

(8) The Expanding World of Reinforcements. May/June 1968. Reinforced Plastics.

APPENDIX E

USE OF STEEL REINFORCING WIRES IN RADIAL PLY TIRES TO IMPROVE INTEGRITY

Steel reinforcing mesh is used in the breaker band or belt of radial ply tires to supply the rigidity necessary to avoid tread squirm. Except for massive truck tires, steel wires or cables are not presently used in the radial ply of tires produced by the manufacturers. Application of steel wire to the radial plies requires attention to three areas.

1. Proportioning of minimum wire bending radius and wire diameter to prevent excessive fibre stress and early failure of the wire reinforcing.

2. Design of reinforcing construction to avoid an increase in stiffness of the tire, and subsequent increased heating and power consumption.

3. Design effectiveness of the steel reinforcing in preventing excessive damage from small arms fire and shrapnel.

For a maximum fibre stress of 50,000 psi, a 1" deflection, and an original bending radius of r = 1 inch, a spring steel wire 0.005 diameter or smaller is required. Diameters for other radii may be computed approximately from the formula $d = 5 \times 10^{-3} \times r^2$ which rapidly loses accuracy as the radius approaches the deflection which is constant at 1 inch.

The structural stiffness of single fibres of rayon or other synthetic cord is considered negligible by most tire researchers. The bending force for the steel wire case considered above is approximately 0.001 lb. The combined spring stiffness of both the tire carcass and multiplicity of steel reinforcing wires must be comparable to existing designs for similar power requirements.

The radial wire reinforcement could be applied either as individual wires spaced about 1-1/2 to 2 times the wire diameter apart or as multiple wire cable similarly spaced with some increase in stiffness.

APPENDIX F

ELASTOMERS

In Bi-monthly progress report BI-C2511-1, several potential designs for the Wheel and Tire Assembly (WTA) were illustrated. Design Number Two incorporated the concept of an elastomeric hinge in the transition region between the wheel and tread. The hinge will be subject to flexing and to abrasion and in some cases of WTA damage must form the running surface for the wheel rim. Accordingly, a survey of materials was made to determine the most suitable elastomer for use in the WTA hinge.

The results of the survey are shown in tabular form in Table 1. In making the selection, items one through eight under the "Property" heading were considered first and the remainder were used for secondary ranking where other properties were equal. As shown, the ethylene-propylene rubber appears to be the most promising from the point of view of properties, cost, and availability. While the fluorocarbon elastomers are ranked second, the cost of such materials would probably be too high for use in the WTA. Butyl is rated third largely because of its set resistance, while the rating of chlorosulfonated polyethylene and chloroprene as fourth and fifth choices respectively is based on a slightly better tear resistance and ozone resistance for the chlorosulfonated polyethylene.

The listing of properties for the elastomers is based on the properties of a standard compound and some improvement of properties can generally be obtained by formulating a specific compound. By doing so, durometer hardness can be controlled as well as abrasion resistance and other properties. Compounds for use in the WTA which should be prepared and tested should use ethylene propylene stocks as a first choice and butyl stocks as a second choice. For both materials, the compounding should be carried out for improvement in oil resistance and improvement should be made in the butyl compound for abrasion resistance. Use of a suitable carbon black is indicated for the latter.

Table F-1. ELASTOMER PROPERTIES

Elastomers in order of suitability for WTA	Ethylene-Propylene Rubber	Fluorocarbon	Butyl	Chlorosulfonated Polyethylene	Chloroprene	Polyurethane	Polyacrylic	Natural Rubber	Isoprene	Nitrile	Buna S	Butadiene
Property												
1. Weather Resistance	E	E	GE	E	E	E	E	F	F	F	F	F
2. Ozone Resistance	E	E	GE	E	GE	E	E	P	P	P	P	P
3. Abrasion Resistance	GE	G	FG	G	G	E	G	E	E	G	G	E
4. Set Resistance	GE	G	FG	F	F	F	F	G	G	GE	G	G
5. Tear Resistance	GE	F	G	G	FG	GE	FG	GE	GE	FG	FG	GE
6. Dynamic Properties	GE	GE	F	F	F	F	F	E	F	GE	G	F
7. Reinforced Tensile	GE	GE	G	F	G	E	F	E	E	GE	GE	E
8. Oil Resistance	P	E	P	F	FG	G	E	P	P	E	P	P
9. Heat Resistance	E	E	GE	G	G	FG	E	F	F	G	FG	F
10. Cold Resistance	GE	F	G	FG	FG	G	P	G	G	G	G	G
11. Chemical Resistance	E	E	E	E	FG	P	P	FG	FG	FG	FG	FG
12. Water/Steam Resistance	E	FG	G	F	F	P	P	FG	FG	FG	FG	FG
13. Flame Resistance	P	E	P	G	G	P	P	P	P	P	P	P
14. Electrical Properties	G	F	G	F	F	F	G	G	E	F	G	G

E = Excellent

G = Good

F = Fair

P = Poor

APPENDIX G

REVIEW OF MICROFILMS

(GENERAL TOPIC: ARMOR)

I. Columbus Division of North American Rockwell Corporation, 1969. Determination of Increased Aircraft Performance by Application of Composite Materials. Final Report, Volume II.

Currently the Armor Plate on the baseline metal OV-10A Airplane consists of 3/8" thick steel plates and 1/2" thick aluminum plates in the cockpit. This armor is reported to protect against 30 caliber armor piercing rounds, but weighs 302.2 lbs.

Composite armor consists of ceramic facing backed with fiber glass. The ceramic tile breaks up the jacket of the bullet, and the fiber glass backup absorbs the energy and catches the fragments.

The facing materials which were studied include:

(1)	Aluminum-Oxide	(Highest Weight)	(Lowest Cost)
(2)	Silicon-Carbide	(Medium Weight)	(Medium Cost)
(3)	Boron-Carbide	(Lowest Weight)	(Highest Cost)

These materials are claimed to save weight and to provide better protection than metal.

From this list, Boron-Carbide was chosen because of its 132 lb. or 42.5% weight compared to the metals.

II. Marine Corps, Washington, D. C., July 1967.

Body Armor (Revised)

This article lists the requirements desired for Body Armor to be worn by an individual soldier.

III. Marine Corps, Washington, D. C., October 1967.

Shields Protective, Arm Held.

This report is not applicable to our study.

IV. Owens-Corning Fiberglas in association with the Naval Research Laboratory, August, 1967.

Glass Fiber Plastic Reinforced Armor. Final Report.

This study reported the effects of certain factors of fiber glass armor on ballistic efficiency. These factors included:

(1) Number of Plies within the Laminate

(2) Fiber Diameter

(3) Glass Size or Treatment

(4) Glass Fabric Finish

(5) Glass Tensile Strength

(6) Theromoplastic (Polyethylene) Matrix

(7) Thermoset (Polyester) Matrix Modifications

(8) Fiber Geometry

Ballistic tests showed that none of these parameters increased ballistic efficiency above that of standard glass fiber reinforced plastic personnel armor (Doron Armor).

This report led to the following conclusions:

(1) Increasing the number of plies within a laminate gives no significant increase in ballistic properties.

(2) Laminates made with smaller diameter fibers show no significant increase in ballistic properties.

(3) The treatment (HTS etc.) or finish of glass fibers result in no improvement of panel ballistic performance over that of starch-sized fibers. Heat cleaned fibers gave the lowest performance.

(4) The use of Polyester of reduced resin solids and the use of Polyethylene Matrix material did not significantly improve ballistic performance.

(5) The use of filler material in the Matrix material did not significantly improve ballistic properties.

V. Ballistic Research Laboratory, Aberdeen Proving Grounds, Md, 1964. Study of Mechanisms of Armor Penetration Resistance. Final Technical Report.

This study was broken down into five phases:

(1) Various Polymers were selected and studied. Ballistic energy absorption appeared to be related to (a) molecular weight (b) crystallinity and (c) glass transition temperature.

(2) Also examined were the energy absorption processes in composite materials. Delamination energy was estimated to range from 16 - 300% of the projectile energy. This large delamination energy had an effect on the $.V_{50}$ ballistic limit. A parameter that considered the (a) tensile strength (b) energy release rate and (c) interaction term correlated well with observed ballistic data on both composites and pure Polymers.

(3) Factors affecting matrix to fiber bonding were studied. More important mechanisms of energy storage in the impacted material are elastic and generation of frictional heat. Cohesiveness and adhesiveness do <u>not</u> dissipate a major portion of the projectile energy. Adequate adhesion is important to laminate strength and stiffness and is therefore significant to the effectiveness of the material in developing the resistive forces required for projectile deceleration. Glass surface preparation then would also be important.

(4) Ballistic testing has been performed in evaluating the various Polymeric Systems and the composite materials consisting of these resins in combination with glass fiber reinforcement. Tables of the experimental results are presented.

(Note: There seem to be some inconsistencies between this report and Number IV, (by Corning-Owens Fiberglas Corp.).)

VI. Modern Plastics, February 1968 (Not on Microfilm)

The U. S. Navy is now preparing gun shields from reinforced epoxy by vacuum bag molding. This shield is said to reduce the fragmentation hazard. Reinforced plastic splinters when hit by a shell, but does not fragment as do metals.

DISTRIBUTION LIST

Commanding General
U.S. Army Tank-Automotive Command
Warren, Michigan 48090
Attn: AMSTA-CL, Chief Scientist/ Technical Director of Laboratories (2)
Attn: AMSTA-R, Director, Development and Engineering Directorate
Attn: AMSTA-CR, Chief Engineer
Attn: AMSTA-RE, Vehicle Systems Division (2)
Attn: AMSTA-RR, Systems Concept Division (2)
Attn: AMSTA-RB, Safety & Reliability Division
Attn: AMSTA-RV, Value Engineering Division
Attn: AMSTA-RI, International Division
Attn: AMSTA-RS, Engineering Control Systems Div.
Attn: AMSTA-H, Advanced Vehicle Systems Lab.
Attn: AMSTA-HC, Concept Formulation Div.
Attn: AMSTA-U, Mobility Systems Lab.
Attn: AMSTA-UL, Land Locomotion Div.
Attn: AMSTA-B, Vehicular Components and Materials Lab. (2)
Attn: AMSTA-BM, Materials Div. (4)
Attn: AMSTA-BMR, Rubber Products Branch (6)
Attn: AMSTA-BA, Automotive Components Div.
Attn: AMSTA-BS, Laboratories Support Div.
Attn: AMSTA-BSL, Research Library Branch (3)
Attn: AMSTA-REB, Project Manager Office (2)
Attn: AMCPM-CV-D, Project Manager Office (2)
Attn: ARSV, AMCPM-ARSV, Project Mgr.
Attn: AMCPM-GG, Project Manager Office (2)

Commanding General
U.S. Army Tank-Automotive Command
Warren, Michigan 48090
Attn: USMC-LNO, Marine Corps Liaison Office (2)
Attn: AMSEL-RD-MN, USAEL Liaison Office
Attn: AMSWE-ICV, USA WECOM Command Liaison Office
Attn: CDCLN-A, Combat Developments Command (2)
Attn: CDLS-D, Canadian Army Liaison Office

Commanding General
U.S. Army Materiel Command
Washington, D.C. 20315
Attn: AMCRD (3)

Commanding General
U.S. Army Weapons Command
Rock Island Arsenal
Rock Island, Illinois 61202
Attn: AMSWE

Commander
Defense Documentation Center
Cameron Station
Alexandria, Virginia 22314 (20)

Commanding General
U.S. Army Test & Evaluation Command
Aberdeen Proving Ground, Md. 21005
Attn: AMSTE (3)

Commanding Officer
U.S. Army Foreign Science and Technology Center
Washington, D.C. 20315
Attn: AMXST-CR-ME, Munitions Building

Department of the Army
Office Chief of Research & Development
Washington, D.C. 20315 (2)

DISTRIBUTION LIST (Con't)

U. S. Army Deputy Chief of Staff for Logistics
Washington, D.C. 20315

U. S. Army Deputy Chief of Staff for Operations
Washington, D.C. 20315

Commanding Officer
Yuma Proving Ground
Yuma, Arizona 85364
Attn: STEYP-TAU (2)

Commander
U.S. Marine Corps.
Washington, D.C.
Attn: AO-4H (2)

Commanding General
U.S. Army Mobility Equipment Research and Development Center
Fort Belvoir, Virginia 22060

Commanding Officer
U.S. Army Aviation Materials Laboratories
Fort Eustis, Virginia 23604
Attn: TCREC-SDL

Commanding Officer
U.S. Army General Equipment Test Activity
Fort Lee, Virginia 23801
Attn: Transportation Logistics Test Directorate

Commanding General
U.S. Army Medical Services Combat Developments Agency
Fort Sam Houston, Texas 78234

President
U.S. Army Artillery Board
Fort Sill, Oklahoma 73503

President
U.S. Army Infantry Board
Fort Benning, Georgia 31905

President
U.S. Army Armor & Engineering Board
Fort Knox, Kentucky 40121

President
U.S. Army Arctic Test Center
APO Seattle 98733

Commanding General
Wright-Patterson Air Force Base
Dayton, Ohio 45433
Attn: ASNMS-20, Aeronautical Systems Division

Commanding General
Wright-Patterson Air Force Base
Dayton, Ohio 45433
Attn: ASWKG, Aeronautical Systems Division

UNCLASSIFIED

Security Classification

DOCUMENT CONTROL DATA - R & D

(Security classification of title, body of abstract and indexing annotation must be entered when the overall report is classified)

1. ORIGINATING ACTIVITY *(Corporate author)*
THE FRANKLIN INSTITUTE RESEARCH LABORATORIES
Philadelphia, Pa.

2a. REPORT SECURITY CLASSIFICATION
UNCLASSIFIED

2b. GROUP
---

3. REPORT TITLE
NEW GENERATION OF TIRE AND WHEEL ASSEMBLIES

4. DESCRIPTIVE NOTES *(Type of report and inclusive dates)*
Final Report - Phase I, December 1969

5. AUTHOR(S) *(First name, middle initial, last name)*
Edmund Thelen, William B. Tarpley, III, Richard H. Hollinger, James B. Dunfee

6. REPORT DATE
December 1969

7a. TOTAL NO. OF PAGES
66

7b. NO. OF REFS
--

8a. CONTRACT OR GRANT NO.
DAAE07-69-C-2601

b. PROJECT NO.

c.

d.

9a. ORIGINATOR'S REPORT NUMBER(S)
F-C2511

9b. OTHER REPORT NO(S) *(Any other numbers that may be assigned this report)*
Technical Report No. 10753

10. DISTRIBUTION STATEMENT
This document has been approved for public release and sale; its distribution is unlimited.

11. SUPPLEMENTARY NOTES

12. SPONSORING MILITARY ACTIVITY
U.S. Army Tank-Automotive Command
Vehicular Components & Material Lab.
Warren, Michigan 48090

13. ABSTRACT

This project was a feasibility study to evaluate, singly and in combination, new design concepts for wheel and tire assemblies. Some of these were combined to delineate a type of tire and wheel assembly which should be outstanding in life, and minimal in vulnerability and maintenance. The new assembly will weigh no more than its present counterpart, and with further development may be reduced by as much as 30%. On a unit-for-unit basis the new assemblies at present would cost more than the present ones, but on a cost-benefit basis, and with large quantity production, they are expected to be cheaper.

DD FORM 1 NOV 65 1473

UNCLASSIFIED

Security Classification

UNCLASSIFIED

Security Classification

14. KEY WORDS	LINK A ROLE	LINK A WT	LINK B ROLE	LINK B WT	LINK C ROLE	LINK C WT
New Generation of Tire and Wheel Assemblies						
Integral Tire and Wheel Assemblies						
Reinforced Plastic Wheel						
Replaceable Treads						
Pressurized Hollow Spheres for Low Vulnerability						
Armor Over Tire (optional)						
Low Profile, Wide Tread and Cross-Section						

UNCLASSIFIED

Security Classification