1379

AD 700155

TECHNICAL REPORT NO. 10717

# ELECTRICAL SYSTEMS DIAGNOSTIC STUDY FOR WHEELED VEHICLES M151, M44, M37, M715 M705, M651, and M39

TECHNICAL LIBRARY REFERENCE COPY

Final Report

September 1, 1969

Contract No. DAAE07-67-C-1563/P006

by Frederick W. Jones
Donald C. Ramsburg
Charlie A. Sheppard

Westinghouse Electric Corporation
Product Support Equipment Department
Cockeysville, Maryland

20040108066

TACOM

VEHICULAR COMPONENTS & MATERIALS LABORATORY

U.S. ARMY TANK AUTOMOTIVE COMMAND Warren, Michigan

Distribution of this document is unlimited.

The findings in this report are not to be construed as an official Department of the Army position, unless so designated by other authorized documents.

The citation of commercial products in this report does not constitute an official indorsement or approval of such products.

Distribution of this document is unlimited.

Destroy this report when it is no longer needed.
Do not return it to the originator.

# ELECTRICAL SYSTEMS DIAGNOSTIC STUDY FOR WHEELED VEHICLES

## M151, M44, M37, M715, M705, M651, M39

Frederick W. Jones, Donald C. Ramsburg and Charlie A. Sheppard
Product Support Equipment Department,
Westinghouse Electric Corporation

Final Technical Report
Contract No. DAAE07-67-C-1563/P006

Vehicular Components and Materials Laboratory
U. S. Army Tank Automotive Command
Warren, Michigan

Distribution of this document is unlimited.

# ABSTRACT

The final report describes the results of a study undertaken by Westinghouse for USATACOM on the organizational maintenance of US Army wheeled vehicles. Specifically, the study was addressed to automatic test equipment fault-isolation procedures for the vehicle electrical system; engine malfunctions were not diagnosed.

Valid diagnostic techniques developed in this study program will eliminate classical troubleshooting by unskilled personnel and assist operator judgment in pinpointing faulty components in the field.

# FOREWORD

The study was conducted from January 1969 to July 1969 under the auspices of USATACOM and was funded under contract number DAAE07-67-C-1563/P006.

The authors wish to acknowledge the aid and assistance of Messrs. F. S. Restivo, Fellow Engineer and W. L Hrybyk, Senior Engineer, of Westinghouse PSED, without whom this Final Report would have been a much more difficult task.

TABLE OF CONTENTS


| Section | | Page |
|---|---|---|
| | ABSTRACT | i |
| | FOREWORD | ii |
| I | INTRODUCTION | 1 |
| II | OBJECTIVE | 2 |
| III | APPROACH TO PROBLEM | 3 |
| | A. THE PROBLEMS | 3 |
| | B. THE APPROACH | 3 |
| | C. POSITION SUMMARY | 4 |
| IV | METHODS OF SOLUTION | 7 |
| | A. PHASE 1 - FAMILIARIZATION | 7 |
| | B. PHASE 2 - TEST PROCEDURES | 8 |
| | C. PHASE 3 - FINAL REPORT | 9 |
| V | TECHNICAL DISCUSSION | 10 |
| | A. TEST APPROACH | 10 |
| | B. OPTIMAL TEST PROCEDURES | 14 |
| | 1. Battery Subsystem | 14 |
| | 2. Starter Subsystem | 21 |
| | 3. Electric Fuel Pump Subsystem | 25 |
| | 4. Ignition Subsystem | 30 |
| | 5. Generator-Regulator Subsystem | 46 |
| | C. TEST EQUIPMENT | 49 |
| | 1. Battery Subsystem | 50 |
| | 2. Starter Subsystem | 50 |
| | 3. Electric Fuel Pump Subsystem | 50 |

TABLE OF CONTENTS (Continued)


| Section | | Page |
|---|---|---|
| | 4. Ignition Subsystem | 52 |
| | 5. Generator-Regulator Subsystem | 62 |
| VI | CONCLUSIONS AND RECOMMENDATIONS | 64 |
| | A. FEASIBILITY OF AUTOMATIC TEST EQUIPMENT | 64 |
| | B. FUTURE AUTOMATIC TEST EQUIPMENT DEVELOPMENT | 64 |
| | C. FUTURE BUILT-IN TEST POINTS | 65 |
| | D. SECONDARY SUBSYSTEMS | 66 |
| | E. TEST PROCEDURES IMPLEMENTATION | 66 |
| APPENDIX A. | SUBSYSTEM SCHEMATIC DIAGRAMS | 70 |
| APPENDIX B. | TEST POINT ANALYSIS | 76 |
| APPENDIX C. | FAATE CHARTS | 81 |
| APPENDIX D. | COMPUTER-PROGRAMMED FAATE CHARTS | 105 |
| APPENDIX E. | SAMPLES OF FAULT ISOLATION | 116 |
| APPENDIX F. | COMPONENT ISOLATION LEVEL AND HOOKUP REQUIRED | 123 |
| APPENDIX G. | SELECTED BIBLIOGRAPHY | 126 |
| DISTRIBUTION LIST | | 135 |


LIST OF ILLUSTRATIONS


| Number | Title | Page |
|---|---|---|
| 2-1. | Optimum Test Sequence Block Diagram | 5/6 |
| 4-1. | Test Operation Block Diagram | 12/13 |
| 4-2. | Battery Subsystem Test Sequence | 15 |
| 4-3. | Battery Subsystem Sequential Flow Logic Diagram | 17/18 |
| 4-4. | Starter Subsystem Test Sequence | 22 |
| 4-5. | Starter Subsystem Sequential Flow Logic Diagram | 24 |
| 4-6. | Electric Fuel Pump Subsystem Test Sequence | 26 |

LIST OF ILLUSTRATIONS (Continued)


| Number | Title | Page |
|---|---|---|
| 4-7. | Electric Fuel Pump Subsystem Sequential Flow Logic Diagram | 28 |
| 4-8. | Ignition Subsystem Test Sequence | 32/33 |
| 4-9. | Ignition Subsystem Sequential Flow Logic | 35/36 |
| 4-9A. | Ignition Subsystem Sequential Flow Logic Diagram | 37/38 |
| 4-10. | Generator-Regulator Subsystem Test Sequence | 47 |
| 4-11. | Generator-Regulator Subsystem Sequential Flow Logic Diagram | 48 |
| 4-12. | Battery Test Clamp | 51 |
| 4-13. | Terminal Probe | 52 |
| 4-14. | Breaker Point Interface | 52 |
| 4-15. | Tachometer/Dwellmeter | 55 |
| 4-16. | DC Measurement Interface | 56 |
| 4-17. | Capacitance Measurement | 57/58 |
| 4-18. | Peak-Reading Kilovoltmeter | 60 |
| 4-19. | Firing Order Verifier | 61 |
| 4-20. | Generator Test Adapter | 62 |
| 4-21. | Regulator Test Adapter | 63 |
| 5-1. | Vehicle Diagnostics Automatic Test Equipment Block Diagram | 68/69 |
| A-1. | Battery Subsystem M151 Vehicle | 71 |
| A-2. | Starter Subsystem M151 Vehicle | 72 |
| A-3. | Electric Fuel Pump Subsystem M151 Vehicle | 73 |
| A-4. | Ignition Subsystem M151 Vehicle | 74 |
| A-5. | Generator-Regulator Subsystem M151 Vehicle | 75 |
| C-1. | Battery and Starter Subsystem FAATE Chart | 82 |
| C-2. | Ignition Subsystem FAATE Chart | 88 |
| C-3. | Generator-Regulator Subsystems FAATE Chart | 97 |
| E-1. | Fault Isolation Test Flow Diagram of Generator-Regulator Subsystem, Sample 1 | 118 |
| E-2. | Sequential Flow Logic Diagram of Ignition System, Sample 2 | 119/120 |

# I. INTRODUCTION

Organizational or user maintenance of Army wheeled vehicles is presently being performed by relatively unskilled mechanics. Troubleshooting of malfunctioning vehicles is done by parts replacement. Over 50 percent of the components removed from the vehicle are not defective. This high turnover of nondefective parts has made it desirable to investigate fault isolation test procedures which could be used with automatic test equipment.

Westinghouse PSED's experience in development, design, and manufacture of complex electronic test equipment including computer-controlled test systems provided the necessary background for undertaking this study. Together with techniques developed under Westinghouse Project FAATE (Fault Analyzing Automatic Test Equipment), this background was utilized in a three-phase approach to the study: Phase 1 - Familiarization, Phase 2 - Test Procedures, and Phase 3 - Final Report.

This final report consists of six sections plus appendixes. Summaries of the study approach, the test results and the conclusions and recommendations are contained in Section 2. The greatest significance emerging from this study is that the diagnostic routines used with automatic test equipment are ideally suited to Army wheeled vehicles.

## II. OBJECTIVE

The objective of this study was to determine optimum fault isolation test procedures for wheeled vehicle spark ignition electrical systems and recommend implementation into automatic test equipment. The procedures were to be based on existing and proven automotive test techniques and were to be organized for minimum operator/mechanic interaction and decision making.

# III. APPROACH TO PROBLEM

## A. THE PROBLEMS

The problems to which Westinghouse PSED addressed itself were:

1. How to apply techniques to pinpoint faulty components in a vehicle's electrical system;
2. How to assist or reinforce operator judgement;
3. How to perform valid diagnostic techniques which will eliminate classical troubleshooting by unskilled personnel;
4. How to do all these with a minimum number of vehicle connections and sensors.

These problems were isolated to the electrical system of a wheeled vehicle and did not include engine malfunctions per se. With these parameters in mind and the solutions to these problems as our goals, we began the study.

## B. THE APPROACH

A three-phase approach was undertaken: 1) familiarize Ⓦ PSED with Army wheeled vehicles and existing test techniques, 2) generate optimum test procedures, and 3) organize study information for presentation in this final report.

Two major problems in determining the optimum test procedures were: 1) interfacing with the vehicles sealed electrical system and 2) using test measurements which would <u>not</u> require operator interpretation. These problems were approached by first performing a test point analysis on the vehicle using the present vehicle configuration to determine what information was available. From the test point analysis data, tests were then devised using our FAATE technique for fault isolation. Finally, tradeoffs

were made to incorporate automatic test equipment techniques. The final test procedures are therefore compatible with both the existing vehicle configuration and existing automatic test equipment.

In determining the optimum test sequence, vehicle operating conditions for subsystem tests, subsystem test priority (i.e., what subsystem operational functions should be checked before other subsystems) and interface requirements were summarized. The result is shown in figure 2-1, Optimum Test Sequence Block Diagram.

## C. POSITION SUMMARY

These procedures have been designed for direct implementation into automatic test equipment; automatic test equipment is feasible for wheeled vehicle diagnostic testing.

Areas recommended for further study and development for automatic test equipment are:

- battery testing,
- ignition primary and secondary waveform analysis, and
- test measurement limits.

To aid in testing and in vehicle/test equipment interface, built-in diagnostic harnesses, more-accessible starter switch terminals, and an ignition secondary test point are recommended. Also, vehicle main lighting, direction signals, instruments and horn should be tested utilizing visual, aural or circuit check techniques. Specific test procedures have not been designed for these subsystems.

# IV. METHODS OF SOLUTION

The study required three phases to provide adequate coverage of the diagnostics problem and of the generation of fault isolation procedures: Phase 1 - Familiarization, Phase 2 - Test Procedures, and Phase 3 - Final Report.

## A. PHASE 1 - FAMILIARIZATION

The first step undertaken in this study was to familiarize ourselves with the Army's Dash 20 manual (Organizational Maintenance) for the M151 Vehicle. Test procedures, component locations, replacement level, repair level and maintenance for the electrical system described in the Dash 20 manual were reviewed and analyzed in detail.

Simplified subsystem schematic diagrams were generated for use in our functional analysis of each subsystem. These schematic diagrams are presented separately in Appendix A. All those components replaceable at organization level were then subjected to a functional parameter analysis.

A functional parameter analysis approach was used in lieu of a failure mode analysis to take advantage of the fault isolation technique developed under Westinghouse Project FAATE. This approach is to analyze a system for the presence of functional parameters within limits and then track erroneous outputs back to the malfunctioning component. Failure mode analysis was utilized only when output measurements had to be analyzed (in lieu of checking for presence of output within certain limits) in discrete steps. The failure of a spark plug was such a case. A fouled plug was analyzed as to firing voltage and voltage variation under different stages of fouling.

The existing electrical system test points were then analyzed for output information available, accessibility, interface required and usefulness. A summary of this

analysis, plus a similar analysis summary for desirable test points, is contained in Appendix B.

During Phase 1 and throughout the study, Automotive Diagnostic Centers were visited and testing techniques discussed with the operators. These visits in combination with texts on automotive operation and repair, and contact with manufacturers and users in the automotive industry, rounded out our familiarization phase. References are contained in Appendix G, Selected Bibliography.

## B. PHASE 2 - TEST PROCEDURES

Upon completion of Phase 1, we began generation of optimal fault isolation FAATE charts. The first generation was based on the premises that all necessary test points and test equipments were available. Succeeding generations contained tradeoffs to make the procedures compatible with the existing vehicle configuration and available test equipment. The final generation of FAATE charts is contained in Appendix C.

The FAATE chart for the Starter and Battery Subsystems was programmed for use on a time-shared computer terminal. This program demonstrates the fault isolation capabilities of the procedures, and also how a test system (not recommended for Army organizational maintenance) could be implemented for operator direction. The program and samples of fault isolation make up Appendix D.

During generation of the FAATE charts, compatibility tradeoffs were continually being made. Many of these tradeoffs directly resulted from analysis of existing test methods and equipment. To ensure that our techniques could be used with present day (classical) testing techniques these procedures were verified for compatibility.

To complete Phase 2 and prepare for written descriptions of our procedures, sequential flow logic diagrams were produced by tabulating FAATE charts and mapping the test flow. These logic diagrams utilize logical AND and OR gates in conjunction with decision diamonds and instruction rectangles. Automatic test equipment can be directly designed from the diagrams. The test procedures and sequential flow logic diagrams for each subsystem are presented in Section V.

## C. PHASE 3 - FINAL REPORT

In Phase 3, information and procedures were correlated for presentation in the final report. Subsystem tests were coordinated and descriptions of all test procedures were written. The optimum test sequence diagram (TACOM) was updated and modified to reflect our effort and a test operation diagram was created to show system coordination with operator actions.

All necessary special test equipment recommended and/or designed is presented in C, Test Equipment, in Section V. Existing adapters used by the Army were included for reference.

To complete Phase 3, all notes and reports were reviewed for material to be included in Section V. Recommendations were correlated into areas for future development, future vehicle test points and additional testing of the electrical subsystems.

The organization of this Final Report was discussed with TACOM to ensure inclusion of all applicable material and to ensure presentation in the most useful manner. Since no Army standards for technical reporting were prescribed, this report was prepared in accordance with good commercial standards and in-house practices.

# V. TECHNICAL DISCUSSION

The test approach, test procedures, and test equipment for performing fault isolating diagnostics are contained in this section. These are the direct results of Westinghouse efforts in determining optimum fault isolating diagnostic test procedures for automatic test equipment using existing, proven test techniques.

The test approach defines final recommendations by Westinghouse for flow of tests, operator action, and levels of test equipment interface. In the test procedures, each subsystem is separately described to maintain continuity of approach for the respective subsystems. Any special or developed test equipment required is described under C Test Equipment.

## A. TEST APPROACH

To provide test procedures which would not discourage a potential user by requiring many interconnections, the following test approach was taken. A minimum number of connections are used for an operational "GO" test. This test verifies subsystem functional operation. With this hookup, partial fault isolation is possible.

If a subsystem fails the operational "GO" test, the procedures dictate operator actions, additional hookups, and disassembly only as required. Whenever disassembly takes place, this disassembly would be required to replace the defective component. By continuing with automatic tests after additional hookup and disassembly, operator decisions for test steps to follow or determining defective components are held to a minimum.

With the initial test hookup, several tests that would normally fall under diagnostics are performed. This is done because test time is negligible once hookups have been made. These additional tests are done only utilizing hookup required for the operational "GO" test.

The test procedure flow is: 1) pretest inspection, 2) initial hookup, 3) operational "GO" test, and 4) diagnostics. During pretest inspection, obviously defective components are detected and test prerequisites checked (e.g., defective battery case, correct oil level, and leaking fuel lines).

The initial hookup is the interface required for operational "GO" test. As described before, the operational "GO" test verifies subsystem functional operation. Finally, for subsystems (failing) the "GO" test, diagnostics are performed to fault isolate to a defective component. If a subsystem has a "GO" condition, diagnostics will not be performed on that subsystem.

Figure 4-1 shows the steps necessary and operator actions required to perform the test procedures. First, the operator performs a pretest inspection on the vehicle. Second, upon completion of the inspection, the operator hooks up the automatic test equipment interface cables.

The third step consists of six operator actions directed by the test set: 1) ignition switch off, crank engine; 2) ignition switch on; 3) crank engine (ignition switch on); 4) run engine (450 rpm); 5) run engine (1500 rpm); and 6) run engine (1100 rpm).

During the test sequence, diagnostics will be performed on any system not meeting established "GO" criteria. Operator action or disassembly plus additional interface hookup may be necessary depending upon the malfunctioning subsystem.

Automatic test equipment output will include subsystem "GO" indications and fault-isolated indications as well as directing operator action. A "Retest" and "Proceed" feature shall be included to repeat a system test once a failure is isolated, and then to complete any remaining tests.

All subsystems were included in this diagram (figure 4-1) to present an overall system description. Each subsystem is further summarized in the subsystem test sequence diagrams included in this section. These diagrams show test input requirements, additional operator actions including disassembly and additional hookup, and levels of testing at which component fault isolation takes place.

## B. OPTIMAL TEST PROCEDURES

Separate optimal test procedures have been written for each subsystem. The descriptions include a test summary, pretest inspection, description of initial hookup requirements, operational test procedures, diagnostic test procedures, and test limitations and recommendations. Test sequence block diagrams summarizing the test procedures and sequential flow logic diagrams showing detailed test procedures are included for each subsystem.

### 1. Battery Subsystem

The operational test for the battery subsystem is performed by cranking the engine for 15 seconds to remove surface charge and then measuring the battery cranking voltage. Engine cranking places the heaviest load on the battery subsystem; if battery reserve voltage is high enough after an extended cranking period, the battery will provide enough current and voltage for reliable vehicle operation.

Diagnostic testing of the battery subsystem includes a hydrometer test, clamp and cable voltage drop test, and the 421 battery test. Fault isolation is to all components in the system and battery isolation includes indication of a bad or a discharged battery.

Figure 4-2 shows the operator actions required, levels at which components are isolated, and when additional hookup is required. Inputs to the hookup blocks indicate interface requirements.

During operational testing, only two connections are needed: 1) more positive battery positive terminal and clamp, and 2) vehicle chassis ground. These connections are necessary for other subsystem (except generator-regulator) tests. Three additional connections are made for diagnostic testings, the three remaining battery terminals and clamps.

#### a. Pretest Inspection

Examine the batteries for damaged cases, damaged posts, and leaks. If no leaks are visible and the electrolyte level is low, refill battery cells to proper level. If a battery is significantly damaged, replace it.

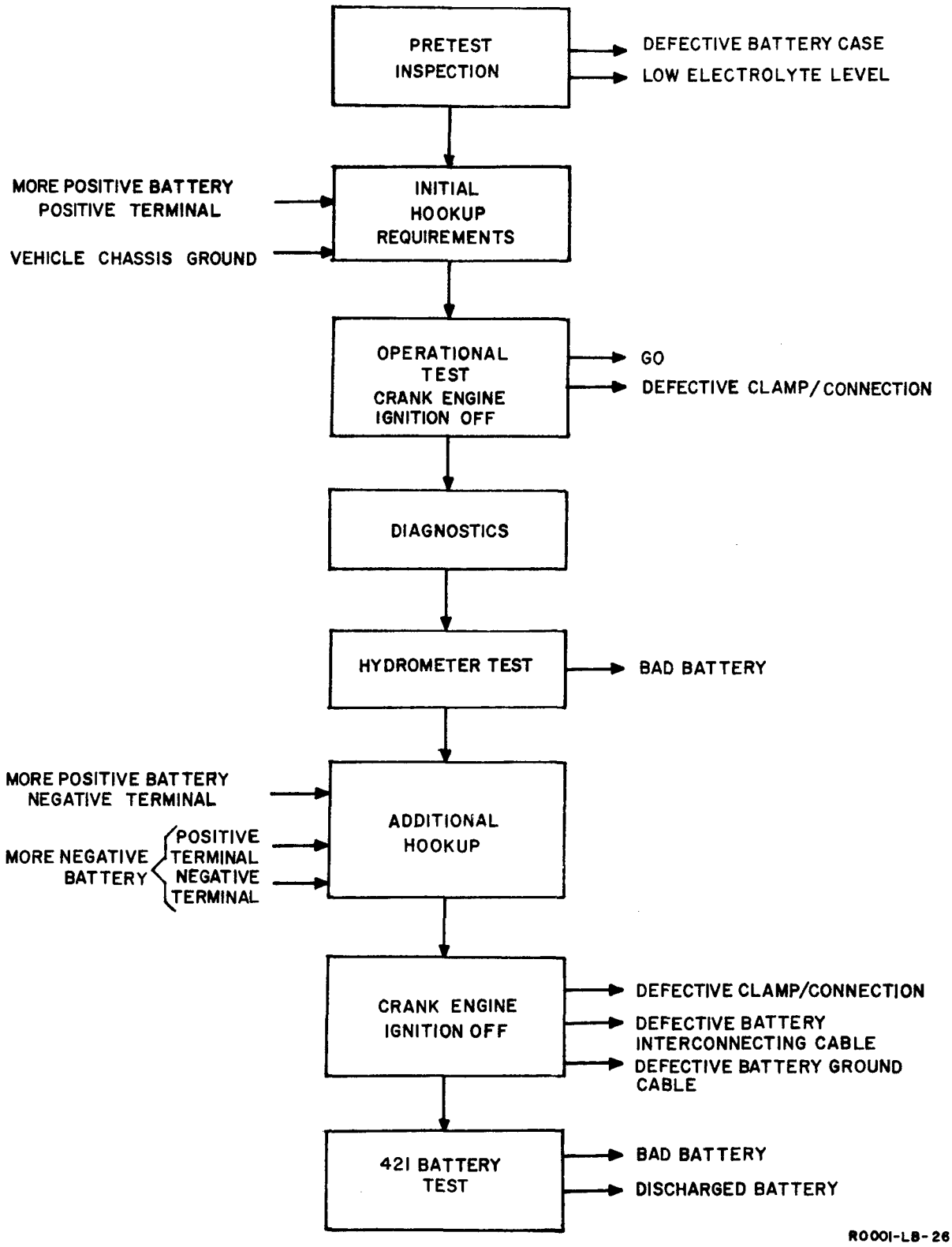


Figure 4-2. Battery Subsystem Test Sequence

b. Interface Requirements

The more positive battery positive terminal with associated clamp and chassis ground are the required interface connections for the operational "GO" test of the battery subsystem.

During diagnostics, the three remaining battery terminals with respective associated clamps are also interfaced.

When both the battery terminal voltage and its associated clamp voltage are available, a bad connection can be detected - differentiating from a low battery voltage.

c. Operational Test

Figure 4-3 shows the flow of test procedures and test condition combinations (logic) for fault isolation.

The battery subsystem operational "GO" test is performed by cranking the engine for 15 seconds and then measuring the batteries cranking voltage. If this voltage is low, diagnostics are to be performed. A nominal or greater voltage indicates the battery subsystem has sufficient reserve and charge to meet the requirements of the electrical system.

d. Diagnostics

In the first step in diagnostics, the operator manually performs a hydrometer test on each battery. If cell variances on a battery are high, the battery should be replaced.

Make additional hookup at each battery terminal and clamp. The cranking voltage between each battery terminal and its clamp should be checked to be less than 0.05 volt. A voltage higher than 0.05 volt indicates a bad connection, defective terminal, or defective clamp at that terminal. The voltage drop across the battery-to-battery cable should not exceed 0.05 volt while cranking; if it does, the battery-to-battery cable is bad and needs to be replaced.

If the connections and the cables are good, the battery is tested by the 421 test. The test is performed on one battery at a time. If a battery voltage is less than 8 volts, the battery would be indicated bad. A battery with its voltage greater than 8 volts is discharged at the rate of 50 amps for 15 seconds; then its open circuit voltage is measured after a 5 second interval. If the voltage is greater than or equal to 11.05 volts, the battery is discharged for an additional 45 seconds at the rate of 50 amps. After a 5-second wait the voltage is measured and stored for comparison to the open circuit voltage after the battery has been charged for 45 seconds at 14 volts 15 amps limited, and the voltage is measured after a 15-second wait. The two voltages are compared using the limit equations below. For example, if the first voltage, $V_1$, is between 11.2 and 13.0 volts, the second voltage, $V_2$, must be greater than 0.78 times the first voltage, $V_1$, plus 2.9 volts and less than 2.5 times the first voltage, $V_1$, minus 15.5 volts.

| For: | $V_1$ | $V_2$ must fall within - |
|---|---|---|
| | $11.2 < V_1 \leqq 13$ | $0.78 \times V_1 + 2.9 < V_2 < 2.5 \times V_1 - 15.5$ |
| | $10.3 < V_1 \leqq 11.2$ | $0.78 \times V_1 + 2.9 < V_2 < V_1 + 1.3$ |
| | $10.1 < V_1 \leqq 10.3$ | $10.9 < V_2 < V_1 + 1.3$ |
| | $8 < V_1 \leqq 10.1$ | $10.9 < V_2 < 11.4$ |

If the second voltage, $V_2$ does not fall within the limits created by the first voltage, $V_1$, the battery is bad and should be replaced. If $V_2$ falls within the limits, the battery should be charged for a designated number of hours:

| | |
|---|---|
| $11.9 \leqq V_2 < 12.1$ | charge for 8 hours |
| $12.1 \leqq V_2 < 12.3$ | charge for 7 hours |
| $12.3 \leqq V_2 < 12.5$ | charge for 6 hours |
| $12.5 \leqq V_2 < 12.7$ | charge for 5 hours |
| $12.7 \leqq V_2 < 12.9$ | charge for 4 hours |
| $12.9 \leqq V_2 < 13.0$ | charge for 3 hours |

The above comparison action is indicated by the "compare" diamond of the battery system sequential flow logic diagram.

The flow is set up so both batteries will be tested. If the first battery tested is "bad" and the second "good", a "stop" condition will exist to complete the test. Whenever a discharged or bad battery indication is found, the Generator-Regulator Subsystem should be tested to verify charging capabilities.

e. Test Limitations

1) The 421 battery test is approximately 75 percent accurate. By using this test versus a more exhaustive and accurate test technique, ease of automatability is gained and considerable test time is saved. Additional information is contained in item 5).

2) Only one battery can be tested at a time using the 421 test.

3) The battery cables must be making good contact with the clamp or a faulty cable indication will result. The connection of the cable to the clamp is not tested; it is assumed that good contact is made.

4) Battery terminal to clamp connections must be repaired (if a faulty indication was made) or else a faulty battery indication will result.

5) The 421 battery test, performed in conjunction with a hydrometer test, is approximately 90 percent accurate. Inaccuracies of the test will result in a bad battery not being detected instead of a good battery being isolated as defective. Many companies utilizing lead acid battery testing were contacted (names included in Appendix G) and a summary of opinions and comments is included below.

Of the companies contacted, 13 were familiar with the 421 battery test; one company said the test was inferior; three had no comments. For a comparison basis, seven felt the test was as good as or better than any other test available when used in conjunction with a hydrometer test to pick up cell differences, and two companies thought that the 421 test (again in conjunction with a hydrometer test) was superior to any other test available and they used it exclusively.

Some of the comments made were: "The 421 test was designed to check a wide range of ampere hour ratings, but it will detect a defective cell, sulphated cell, open cell, and shorted cell.."; "The hydrometer should be used along with the test to obtain the best efficiency.."; "The 421 does what it was designed for and that is to check batteries fast and accurately.."; "The 421 has its hangups and, that is, it passes faulty batteries with a surface charge.."; "The test was developed from an experimental basis rather than a theoretical basis. The results of the test is an experimental curve that covers all the ranges of the battery.."; "The best tester is the battery load test.."; "All the testers on the market have shortcomings, but the 421 is among the ones with the least..."; "The only real test is to load the battery measuring output current, and then recharge the battery measuring charging current..." "The best test is the hydrometer test. There are few faults the hydrometer test will not pick up...".

2. Starter Subsystem

The Starter Subsystem is operationally tested by comparing starter interface cranking voltage drop, engine cranking rpm's, and starter cranking current draw. All test measurements are made while cranking or attempting to crank the engine. During the operational test, fault isolation will be carried out to the starter without further operator interaction or additional hookup or disassembly.

All cables and the starter switch are checked during diagnostics and the starter switch has to be removed from the vehicle.

Test sequence for the starter subsystem is summarized in figure 4-4. Note that incorrect oil viscosity is to be detected in the pretest inspection. If too heavy an oil is in the vehicle, engine rpm's will be reduced and may give an erroneous indication of a malfunctioning starter.

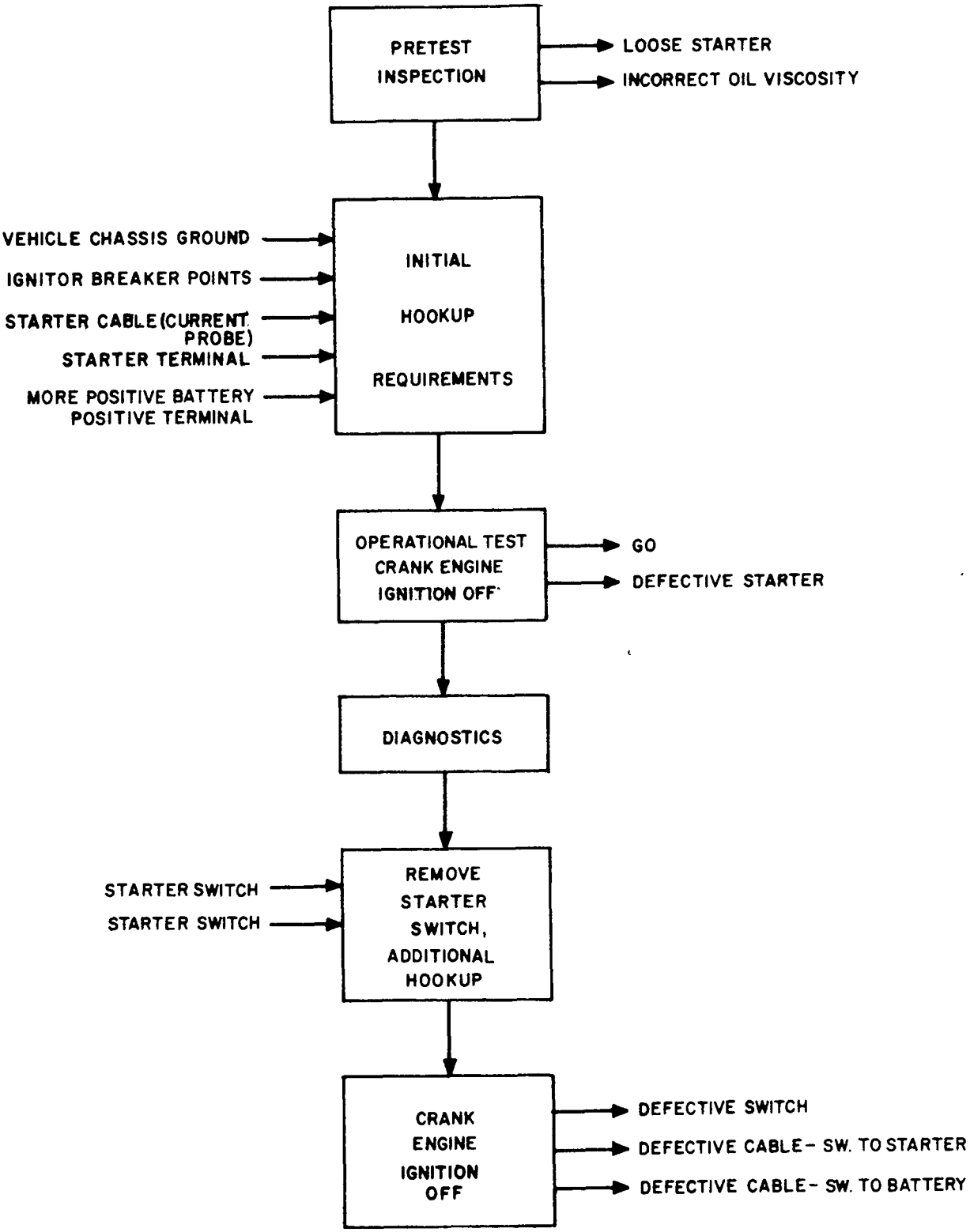


Figure 4-4. Starter Subsystem Test Sequence

If a Starter Subsystem test is performed without first checking the Battery Subsystem, low battery voltage can result in an erroneous indication of starter failure by reducing cranking rpm.

a. Pretest Inspection

1) Check for correct engine oil viscosity and for correct engine oil level. Viscosity is checked only by referring to vehicle log book for correct oil usage during last maintenance interval.

2) Check for secure starter mounting (hand pressure only).

3) Check for unusual starter noise while cranking. If unusually noisy, replace starter.

b. Initial Hookup Requirements

Five test points are used to interface with the vehicle during diagnostic testing: 1) more positive battery positive terminal, 2) chassis ground, 3) starter terminal, 4) starter cable (current probe, clamp-on), and 5) breaker points. Connections 1), 2), and 5) are used in conjunction with other subsystem tests.

c. Operational Test

Figure 4-5 shows the flow of test procedures and the test condition combinations (logic) for operational testing and fault isolation diagnostics.

To obtain a "GO" result from operational testing, the cranking voltage drop from the more positive battery positive terminal to the starter terminal is checked. If this drop is too high, the interface circuit is diagnosed for fault isolation. Engine cranking rpm are then checked. Too low an rpm indicates a faulty starter. Cranking current draw of the starter is the last operational test step. If the current draw is too high, a faulty starter is indicated.

d. Diagnostics

If the voltage drop from the starter terminal to the more positive battery positive terminal was too high, diagnostics are to be performed on this interface.

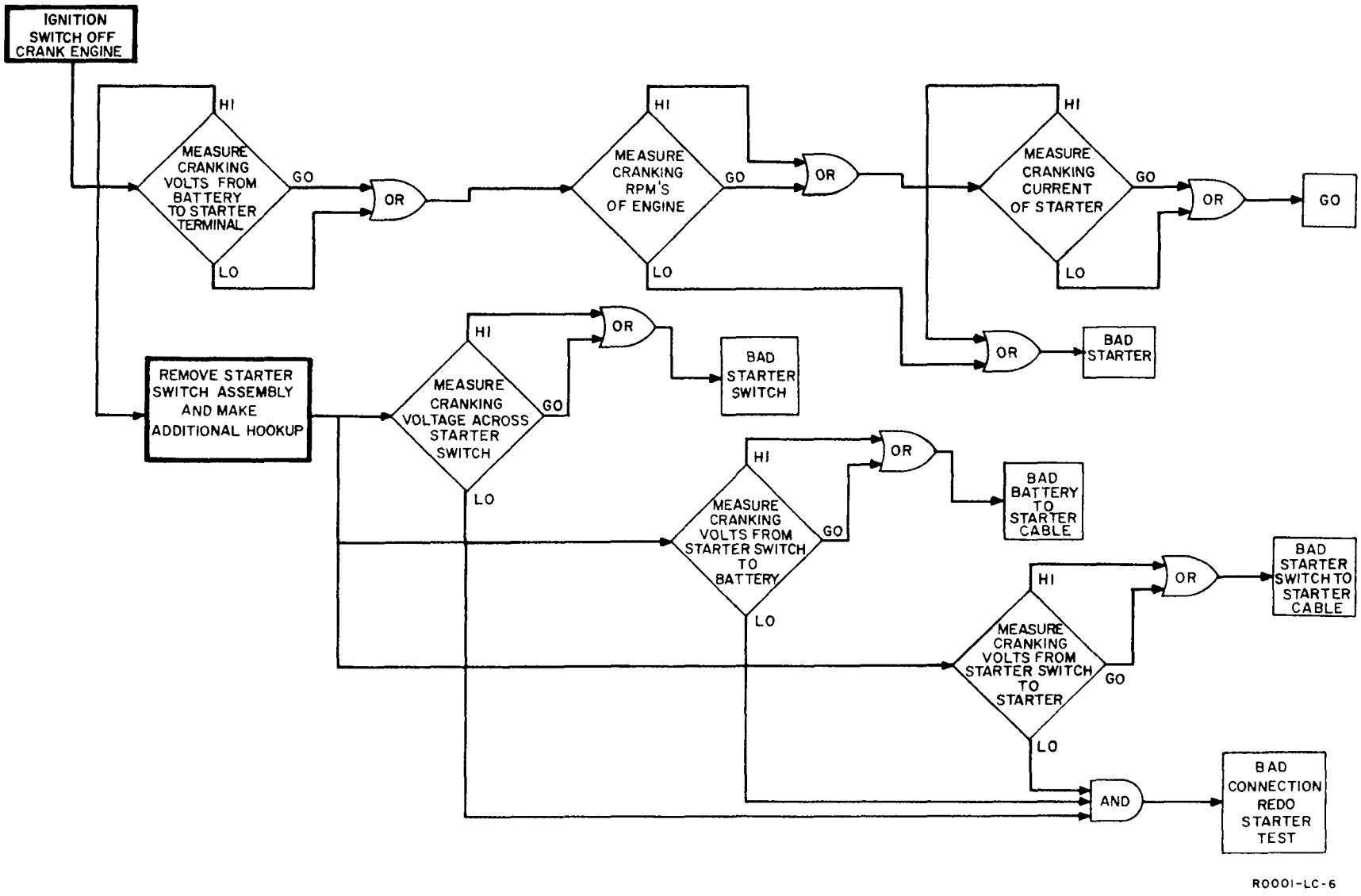


Figure 4-5. Starter Subsystem Sequential Flow Logic Diagram

First the starter switch must be removed from the vehicle and connections made to each terminal. The voltage drops across the starter switch, starter switch to starter, and starter switch to more positive battery positive terminal are then checked. The fault will be isolated to the starter switch, switch-to-starter cable, or switch-to-battery cable, respectively, according to a high voltage drop.

e. Test Limitations and Justification

1) A starter is diagnosed as bad when it will not crank the engine, cranks the engine too slowly, or draws an excessive amount of current. A bad or discharged battery may cause any of these indications.

2) Missing flywheel teeth may cause a faulty starter indication if the starter is noisy or if the starter fails to crank the engine.

3) A mechanically tight engine causing slow starter cranking speed will result in a faulty starter indication.

4) Excessively heavy engine oil which causes slow starter cranking speed will result in a faulty starter indication.

3. Electric Fuel Pump Subsystem

The electric fuel pump and associated wiring, such as used in the M151 vehicle, may be tested by monitoring the input voltage at the fuel pump and the fuel pump output pressure under three different conditions as outlined in the operational test. If a fault in the wiring or switch is indicated, an additional hookup must be made to fault isolate to the defective component or circuit.

The Electric Fuel Pump Subsystem test is summarized in figure 4-6. Note that the fuel pump itself may be fault-isolated with the original hookup in the operational test.

a. Pretest Inspection

Before hookup of the test equipment, the Electric Fuel Pump Subsystem must be visually inspected for damaged wires or loose connections and to verify that the fuel line at the fuel pump and carburetor is intact and is not leaking.

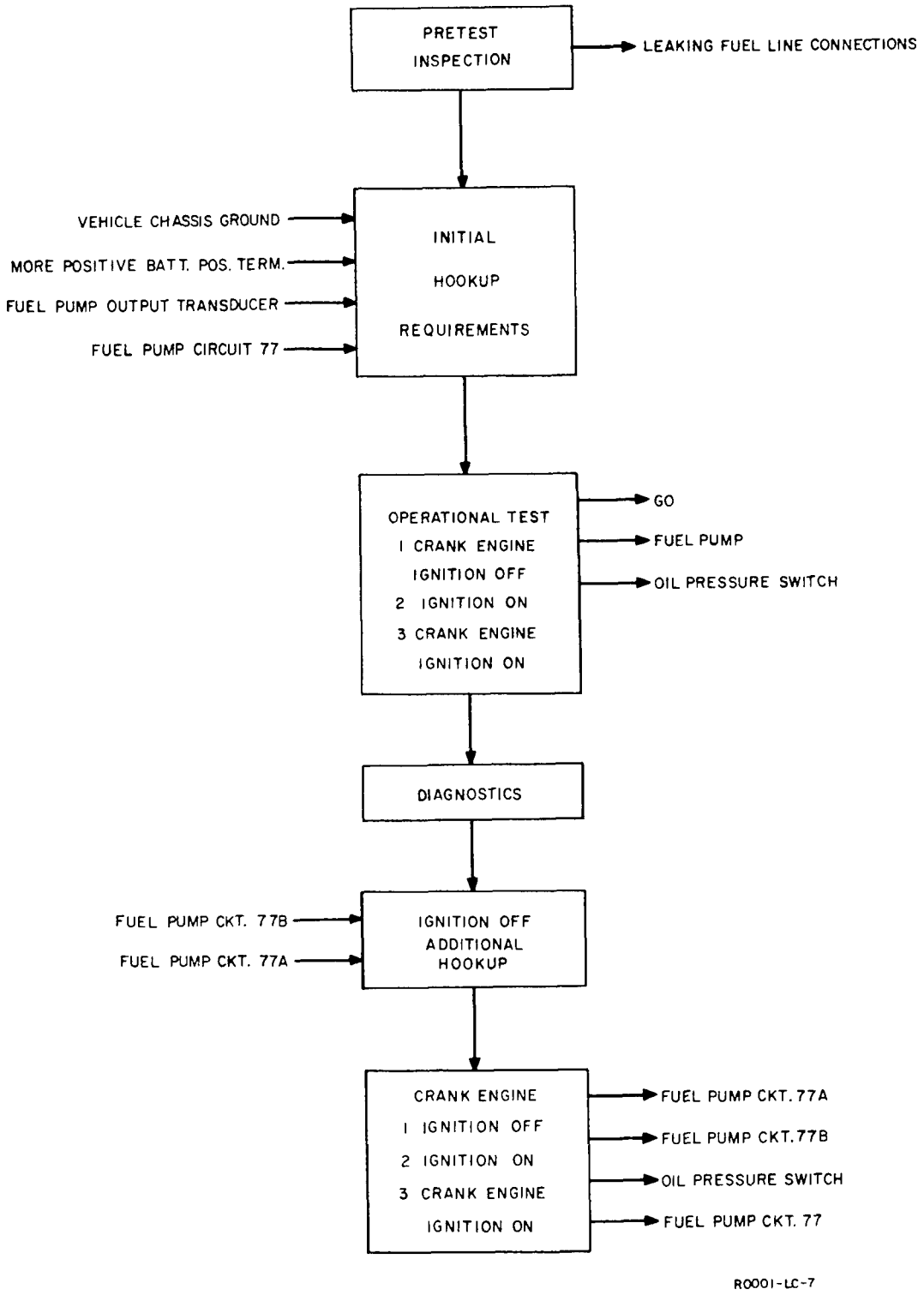


Figure 4-6. Electric Fuel Pump Subsystem Test Sequence

b. Initial Hookup Requirements

The test points required for frame ground and for the positive terminal of the more positive battery will be the same as those used for the other subsystem tests. No disassembly is necessary for their hookup.

The input lead at the fuel pump must be disconnected in order to insert an adapter providing a test point right at the fuel pump. The rubber fuel line must be disconnected at the fuel pump in order to insert an adapter, containing a pressure transducer, into the fuel line.

c. Operational Test

Figure 4-7 shows the flow of test procedures and test condition combinations (logic) for fault isolation.

The Electric Fuel Pump Subsystem test begins by cranking the engine with the ignition switch off. The voltage at the fuel pump test point is compared with the battery voltage for an "EQUAL TO" or "LESS THAN" decision. The voltages should be equal at this time if the circuit is correct thru the starter switch and oil pressure safety switch. The fuel pump should be functioning at this time and the fuel line pressure should rise and stabilize at 3 to 5 psi (according to TM9-2320-218-20).

The next measurement is made with the ignition switch on and without cranking the engine. The voltage at the fuel pump test point should be zero at this time, unless there is a residual oil pressure from cranking the engine. A "NO-GO" at this point will direct the operator to observe the oil pressure gauge to determine if this is the cause of failure.

The engine is then cranked with the ignition switch on. The voltage at the fuel pump test point is compared with the battery voltage and these should be equal whether the engine starts or not. The fuel line pressure is not measured at this point because the previous measurement is deemed adequate.

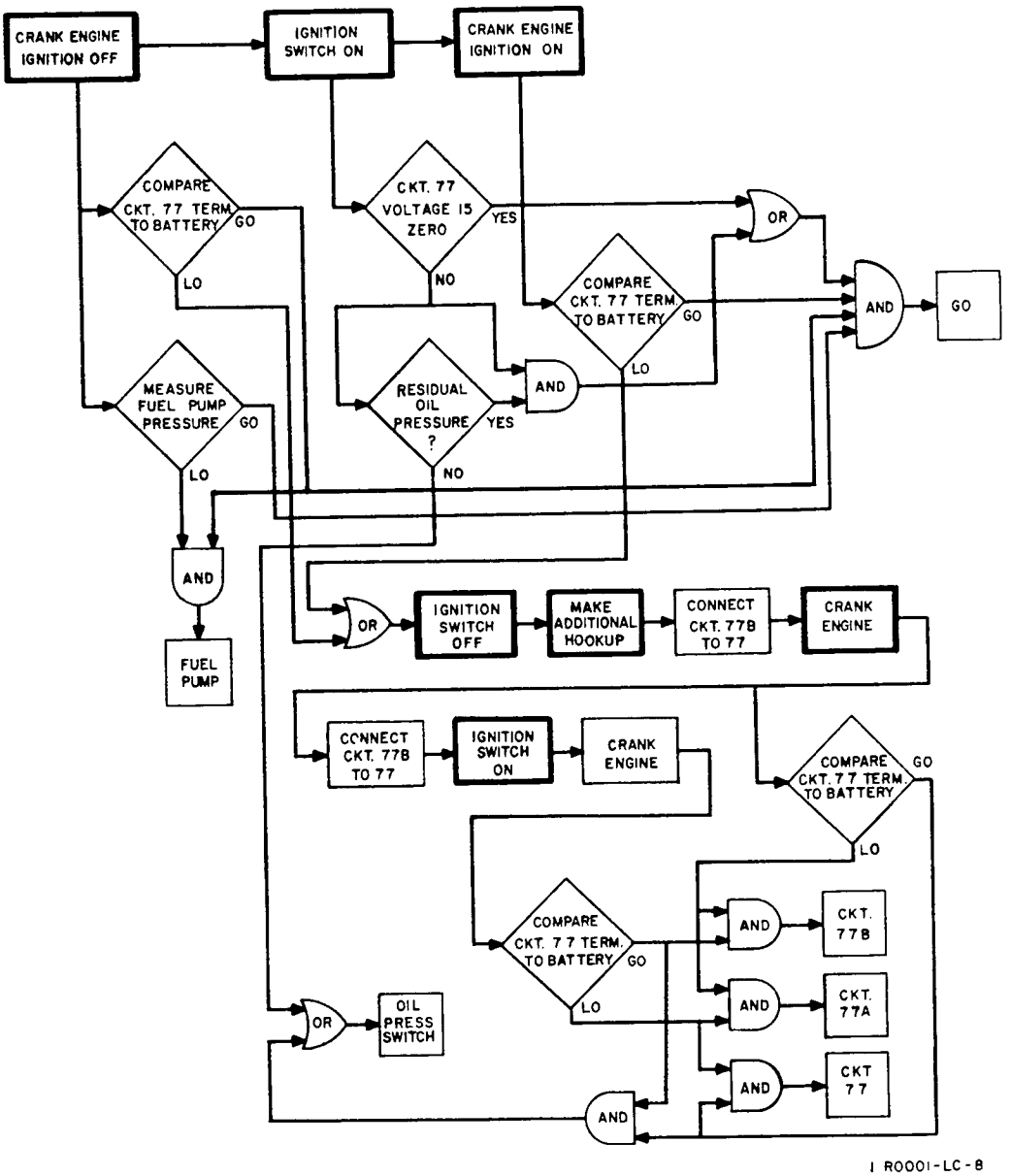


Figure 4-7. Electric Fuel Pump Subsystem Sequential Flow Logic Diagram

d. Diagnostics

If the voltage at circuit 77 terminal is less than battery voltage when cranking engine with ignition switch off or when the engine is running, turn off ignition switch and make additional hookup and measurements:

1) Disconnect cable from oil pressure safety switch and connect to mating test lead cable.

2) Connect circuit 77B to circuit 77 and crank engine with ignition switch off. Compare voltage at circuit 77 terminal with battery voltage.

3) Connect circuit 77A to circuit 77 and start engine by cranking with ignition switch on. Compare voltage at circuit 77 terminal with battery voltage.

4) If voltage at circuit 77 terminal is less than battery voltage when circuit 77B is connected to circuit 77 but not when circuit 77A is connected to circuit 77, the fault lies in harness circuit 77B.

5) If voltage at circuit 77 terminal is less than battery voltage when circuit 77A is connected to circuit 77 but not when circuit 77B is connected to circuit 77, the fault lies in harness circuit 77A.

6) If voltage at circuit 77 terminal is less than battery voltage when circuit 77B is connected to circuit 77 and also when circuit 77A is connected to circuit 77, the fault lies in harness circuit 77.

7) If the voltage at circuit 77 terminal is equal to the battery voltage when circuit 77B is connected to circuit 77 and also when circuit 77A is connected to circuit 77, the fault lies in the oil pressure safety switch.

If the fuel pump pressure is low but the voltage at circuit 77 terminal is equal to battery voltage when cranking engine with ignition switch off, the fault lies in the fuel pump.

If the voltage at circuit 77 terminal is not zero when ignition switch is on and without cranking engine (engine not running), check oil pressure

gauge for residual oil pressure. If no oil pressure exists, the fault lies in the oil pressure safety switch.

e. Test Limitations and Justification

No current measurement is used in the fuel pump diagnostics which means if the fuel pump input was shorted to ground, thereby dropping all the battery voltage across the wiring and oil pressure safety switch, the indication may be a fault in circuit 77. The excessive current drawn in this case, however, would cause obvious damage to the wiring harness or would trip the circuit breaker.

If the residual oil pressure, with engine not running, is over 3 and 1/2 psi but is not sufficient to produce a deflection on the oil pressure gauge (or if the oil pressure gauge or sending unit is defective), the indication will be a faulty oil pressure safety switch. This can be checked by allowing time for the residual oil pressure to bleed off and then retesting.

If the diagnosis indicates a fault in circuit 77A, the fault could be in the harness or in the circuit breaker. The circuit breaker must be verified as ON in this case by the operator.

If the carburetor float needle fails to seat or if there are any bad leaks in the fuel line, this will reduce the fuel line pressure and the indication will be a faulty fuel pump.

4. Ignition Subsystem

The Ignition Subsystem and associated wiring in the M151 or a similar gasoline engine vehicle may be automatically tested by initial hookup of five test points. Two of these points are from ground and the positive terminal of the more positive battery, both of which are used for other subsystems.

The breaker point capacitor is measured before starting the engine by cranking the engine with the ignition switch off and measuring the breaker point test point when the breaker points are open (as ascertained by the breaker point interface circuit described under C, Test Equipment). The distributor input current and voltage are

then measured while cranking the engine with the ignition switch on. At the same time, the breaker points are measured for voltage drop and cam dwell and the peak voltage at number one spark plug is measured. If the engine starts, the individual cylinders are disabled one at a time by shorting out the breaker points at the appropriate time or by shorting out the spark plug for number one cylinder, and comparing the rpm drop for a cylinder balance test. This information in addition to the timing advance check which is made by the operator, can produce a "GO" result, or may be automatically analyzed to produce a directive to the operator as to the faulty component or for additional instructions to begin a fault isolation sequence.

The operator must perform additional disassembly and/or hookup in order to proceed with automatic fault isolation and diagnosis by the equipment. Diagnosis of faults in the high voltage circuit at the distributor cap, rotor, spark plug cables and spark plugs, depends heavily on visual inspection by the operator for damaged insulation, burned contacts, or improper gap. The operator is further directed to visually inspect for frayed wires or loose connections which may give an indication of a faulty component.

Figure 4-8, summarizes the test procedures. Interface requirements are shown as inputs to the initial hookup requirements block. Fault isolations are shown as outputs at the earliest level of testing which determines faulty components.

a. Pretest Inspection

Before hookup of the test equipment, the Ignition Subsystem must be visually examined for obvious maladies such as loose or missing parts, damaged wires or spark plug cables, or moisture in the distributor. The ignition switch must be OFF before beginning disassembly or hookup. The DC voltages measured in the ignition system are referenced to frame ground and to the positive terminal lug of the most positive battery instead of at the starter switch where circuit 11 begins. Circuit 6, which connects circuit 11 to the battery, should be ascertained as satisfactory before beginning the Ignition Subsystem test.

b. Initial Hookup Requirements

The test points required for frame ground and for the positive terminal lug of the positive battery will be the same as those used for the other subsystem tests. No disassembly is necessary for their hookup.

The connector at the distributor input must be disconnected for insertion of an adapter containing an ammeter shunt and with two leads to interface with the test equipment.

The plug in the top of the distributor must be removed in order to insert adapter 4910-356-7492 as the breaker point test point.

The cable must be disconnected from number one spark plug in order to insert adapter 4910-356-7504 in the HV circuit. This allows connection of the peak reading kilovoltmeter and the timing light.

c. Operational Test

Figure 4-9 shows the flow of test procedures and test condition combinations (logic) for fault isolation.

The Ignition Subsystem test begins when cranking the engine with the ignition switch off. At this time, the breaker point capacitor is measured and a decision of "HIGH", "LOW" or "GOOD" is stored for later use. This measurement may be performed simultaneously with another subsystem test but not at the same time that a tachometer or dwellmeter measurement is required. Note that tachometer and dwellmeter measurements may be made with the ignition switch either on or off by using the breaker points for a current sink.

The next series of measurements begins when the engine is cranked with the ignition switch on. Regardless of whether the engine starts or not, the following measurements are made:

1) Dwell angle is measured for "HIGH", "LOW" or "GOOD" decision.

2) When breaker points are open:

(a) DC voltage at breaker points is compared with the battery voltage for "EQUAL TO" or "LESS THAN" decision. The stipulations for an "EQUAL TO" decision in this case must include a tolerance to allow for noise plus the accuracy of the measuring equipment.

(b) DC voltage at distributor input is compared with the battery voltage for "EQUAL TO" or "LESS THAN" decision. The stipulations for an "EQUAL TO" decision are the same as mentioned in the preceding measurement.

(c) The ignition input current is measured for a "ZERO" or "HIGH" decision. The stipulation for a "HIGH" decision in this case must actually be greater than the normal leakage current plus the smallest increment within the accuracy of the measuring equipment.

3) When breaker points are closed:

(a) The voltage drop across the breaker points is measured for a "GOOD" or "HIGH" decision. The limit for this measurement would be 0.2 VDC (per TM9-2320-218-20).

(b) DC voltage at distributor input is compared with the battery voltage for "EQUAL TO" or "LESS THAN" decision. The stipulations for an "EQUAL TO" decision in this case must include a tolerance to allow for normal line voltage drop plus the accuracy of the measuring equipment.

(c) Ignition input current is measured for a "HIGH", "LOW" or "GOOD" decision. The stipulation for a "GOOD" decision in this case would be the nominal current range scaled to match the battery voltage at the time of measurement.

4) The peak high voltage at the number one spark plug is measured for a "HIGH", "LOW" or "GOOD" decision. The stipulation for a "GOOD" decision in this case would be a peak voltage indicating the presence of high voltage sufficient to fire the spark plug but not so high that the spark plug is obviously bad.

If the engine starts, the following measurements are made:

(1) With engine running at idle:

- Initial timing advance must be verified using a timing light.
- Each individual cylinder must be disabled by applying a ground at the breaker points at the appropriate time and the rpm change is measured and stored for a cylinder balance test.

(2) With engine running at 1500 rpm:

- Total timing advance must be measured using a timing light and a variable delay to be manually adjusted by the operator.
- The consistency of the dwell angle is measured for a "GOOD" or "HIGH" decision. The stipulation for a "HIGH" decision in this case would be a variation of 3 degrees or more (per TM9-2320-218-20).

If the engine doesn't start, it is necessary to insert an adapter (4910-356-7504) at every spark plug. The firing voltage of each spark plug may then be measured in lieu of the cylinder balance test previously mentioned. The operator must also check the initial timing advance with the timing light while cranking the engine to verify that this is somewhere within reason and not the cause of the engine not starting. The results of these measurements are sufficient to produce a "GO"

result for the Ignition Subsystem. Any measurements producing an unsatisfactory decision will lead to further disassembly and/or hookup by the operator followed by automatic diagnostics.

d. Diagnostics

If the distributor input voltage and input current are both low:

1) Turn ignition switch to OFF.

2) Remove ignition switch from the dashboard with wires still connected.

3) Connect test lead clip to ckt. 12 terminal on ignition switch.

4) Connect test lead clip to ckt. 11 terminal on ignition switch.

5) Turn ignition switch to ON.

6) Jumper breaker points to ground. (Automatic)

7) Compare DC voltage at ckt. 12 terminal on ignition switch with voltage at distributor input. If voltages are different, fault lies in ckt. 12.

8) Compare DC voltage at ckt. 11 terminal on ignition switch with voltage at ckt. 12 terminal on ignition switch. If voltages are different, fault lies in the ignition switch.

9) Compare DC voltage at ckt. 11 terminal on ignition switch, with voltage at battery terminal. If voltages are different, the fault lies in ckt. 11.

The distributor cap must be removed for inspection and/or additional hookup for any of the following indications:

1) Distributor input voltage is correct but the input current is incorrect.

2) The high voltage measurement at the spark plugs are all low.

3) The high voltage measurement at one or more but not all spark plugs is low and the spark plug cable is good.

4) The voltage drop across the breaker points is high.

5) The dwell angle variation is high.

6) The dwell angle is incorrect.

7) The distributor input current is high.

If the distributor input voltage is correct but the input current is incorrect.

1) Connect a test lead clip to the breaker point side of the ignition coil.

2) Connect a test lead clip to the input side of the ignition coil.

3) Turn igntion switch ON.

4) Jumper breaker points to ground.

5) Measure the voltage at the ignition coil input.

- If the voltage at the ignition coil input is low and the distributor input current was high or if the voltage at the ignition coil input is high and the distributor input current was low, the indication is a faulty ignition coil.
- If the voltage at the ignition coil input is low and the distributor input current was low, or if the voltage at the ignition input is high and the distributor input current was high, or if the voltage at the ignition coil input is zero and the distributor input current was zero, the indication is a faulty ballast resistor.
- If the voltage at the ignition coil input is zero and the distributor input current was high, the indication is a faulty feed-thru capacitor.

If the high voltage measurements at the spark plugs are all low:

1) Visually inspect the distributor rotor and cap for damaged insulation and burned contacts.

2) If the distributor rotor and cap are in satisfactory condition, the dwell angle is correct, the voltage drop across the breaker points is correct, the distributor input voltage and the distributor input current are correct, the indication is a faulty ignition coil.

If the capacitance measured at the breaker points is low, or if the capacitance measured at the breaker points is high and the dwell angle is low or good, the indication is a faulty breaker point capacitor.

If the capacitance measured at the breaker points is high, the dwell angle is high, and the distributor input current is correct, the operator must measure the breaker point gap. If the breaker point gap is correct, the indication is a faulty breaker point capacitor.

If the voltage drop across the breaker points is high:

1) Inspect the connections of the lead from the ignition coil to the breaker points for frayed or loose wires.

2) Inspect the breaker points for contamination from oil or grease and for proper grounding.

3) Inspect the breaker point contacts for pitting or overheating and replace if necessary.

For a high dwell variation:

1) If the dwell variation is high from cylinder to cylinder but the dwell is constant for each individual cylinder, the distributor cam is worn unevenly or the shaft is offset or bent.

2) If the dwell variation is high from cylinder to cylinder and also for each individual cylinder, the points may be binding on the pivot, the shaft bushing may be excessively worn, or the breaker point spring tension may be low.

If the dwell angle is incorrect, adjust the breaker point gap to specifications. If the dwell angle is incorrect and the breaker point gap is correct, the distributor cam is excessively worn.

If the initial timing is incorrect, adjust distributor to bring it within specifications.

If the total timing advance is incorrect, the indication is a faulty distributor advance mechanism.

If the firing order is incorrect, inspect the distributor for reversed spark plug cables.

If the engine starts during the operational test, but the cylinder balance test shows a faulty cylinder, that is, one which does not contribute to the engine speed proportionally, an adapter (4910-356-7504) must be inserted at that spark plug and the high voltage measured for a "HIGH", "LOW" or "GOOD" decision. The stipulation for a "GOOD" decision in this case would be a peak voltage indicating the presence of high voltage sufficient to fire the spark plug but not so high that the spark plug is obviously bad. If the decision is "GOOD" for the spark plug test but the engine has failed the cylinder balance test, the indication is a malfunction other than in the Ignition Subsystem such as fuel or compression or a partially fouled spark plug.

If the high voltage at one or more spark plugs is low, but not at all spare plugs:

1) Remove spark plug cables from suspected spark plugs and test individually for leakage and continuity.

2) Inspect distributor cap for burnt or corroded contact or damaged insulation.

3) If distributor cap and spark plug cables are in satisfactory condition, the indication is a faulty spark plug.

If the high voltage at any spark plug is too high, remove the plug to check the gap. If the gap is correct, the indication is a faulty spark plug.

e. Test Limitations and Justification

The cylinder balance test, which is used in conjunction with a high voltage measurement to evaluate the high voltage circuit, is an accepted procedure and

may be found in Motor's Auto Repair Manual and Glenn's Auto Repair Manual. The advantage of this technique, as applied to automatic test, is that the spark plugs, cables and distributor contacts for each individual cylinder may be evaluated for a "GO" result by only hooking up to the number one spark plug and the breaker point test point. If the high voltage at number one spark plug falls within the normal limits and all cylinders contribute proportionally to the engine rpm, then the high voltage circuit for all cylinders must be satisfactory. This technique may not be used if the engine will not start, since the test requires a series of tachometer measurements, but the high voltage at each spark plug may be measured instead.

The breaker point capacitor is to be measured with a capacitance bridge circuit having an interrogating voltage at about 15 kHz. This technique is used in many commercial capacitance meters for testing capacitors out of the circuit. The breaker point capacitor may be measured in circuit with this technique at 15 kHz or above, so that the impedance of the ignition coil primary is large enough to provide isolation from the feed-thru capacitor at the distributor input. Any leakage in the capacitor, which is large enough to effect the engine performance, will produce a phase shift and be detected by the capacitance bridge as a high capacitance.

The lack of a test point between the feed-thru capacitor and ballast resistor means that similar malfunctions in either component must be diagnosed as the most probable case. A short to ground in either component will be diagnosed as a faulty feed-thru capacitor and an open circuit will be diagnosed as a faulty ballast resistor.

Any dampness or breakdown in the distributor cap insulation sufficient to produce cross firing on multiple firing of the spark plugs will be diagnosed as reversed spark plug cables.

All fault isolation inside the distributor assembly requires the operator's verification of satisfactory leads and connections. For example, if the lead from the ballast resistor to the ignition coil primary has a bad connection, the indication will be a faulty ballast resistor.

The initial timing advance is performed by the operator in the normal fashion with a timing light in lieu of mechanical interface with the vehicle to permit automatic measurement with a magnetic pickup or similar device. The total timing advance is measured using a similar technique with the initial timing as a reference. The operator must observe the timing mark with the timing light and adjust a control knob unitl the timing mark and pointer are aligned. The setting of the control knob is then analyzed automatically to produce a go or no-go result.

5. Generator-Regulator Subsystem

The Generator-Regulator Subsystem is operationally tested by verifying adequate generator output and verifying regulator voltage regulation and reverse current cutout. All tests on the system are performed at 1100 rpm - engine speed at which maximum generator output becomes available.

Full load regulator output voltage is checked to verify voltage regulation; then maximum generator output capability is checked to be adequate by shorting the field to the output. Finally, reverse current cutout is checked by opening the generator field and checking for current flow thru the regulator.

Fault isolation in this subsystem is to the regulator or generator only - no cables are checked. A regulator needing adjustment will be indicated as bad and should be replaced. No regulator adjustments are performed at the organizational level.

The Generator-Regulator Subsystem test procedure is summarized in figure 4-10. Diagnostics are shown as part of the operational test because no additional hook-up, disassembly, or operator interaction is required for operational testing and fault isolation.

a. Pretest Inspection

1) Inspect the fan belts for flaws and tightness. If the belts are flawless and loose, tighten them. If the belts are worn or defective, replace them.

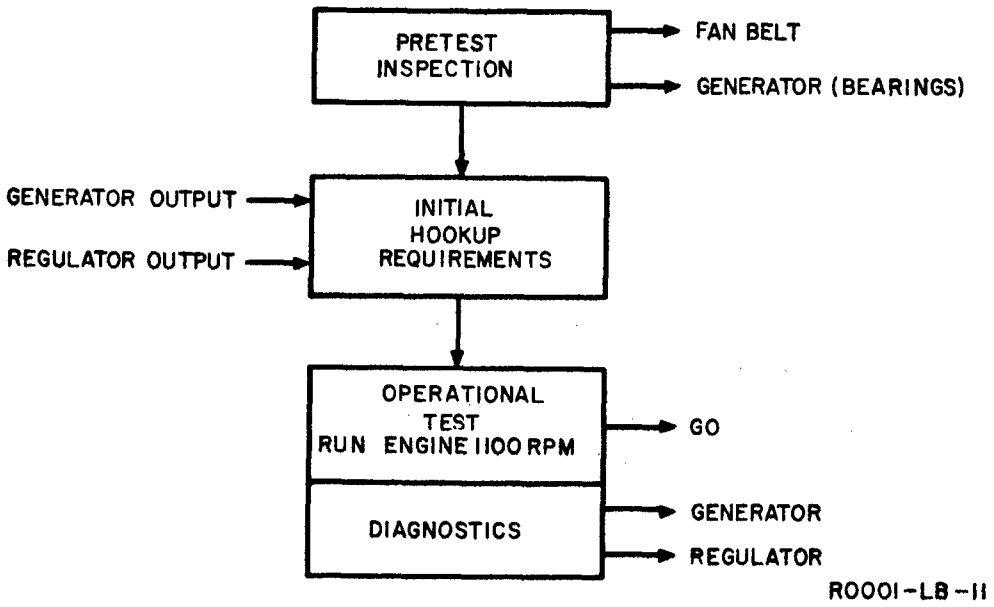


Figure 4-10. Generator-Regulator Subsystem Test Sequence

2) Check for unusual noise in the generator when the engine is running. If generator is unusually noisy, replace it.

3) Check visible electrical connections.

b. Initial Hookup Requirements

Two test adapters are necessary to interface with the system. One adapter is placed in series with the generator to monitor its output and gain access to the field circuit. The other adapter is placed in series with the regulator output circuit to monitor and load the generator-regulator system. These connections will also be used during diagnostic testing - no additional hookup or disassembly is required.

c. Operational Test and Diagnostics

Figure 4-11 shows the flow of test procedures and test condition combinations (logic) necessary for fault isolation.

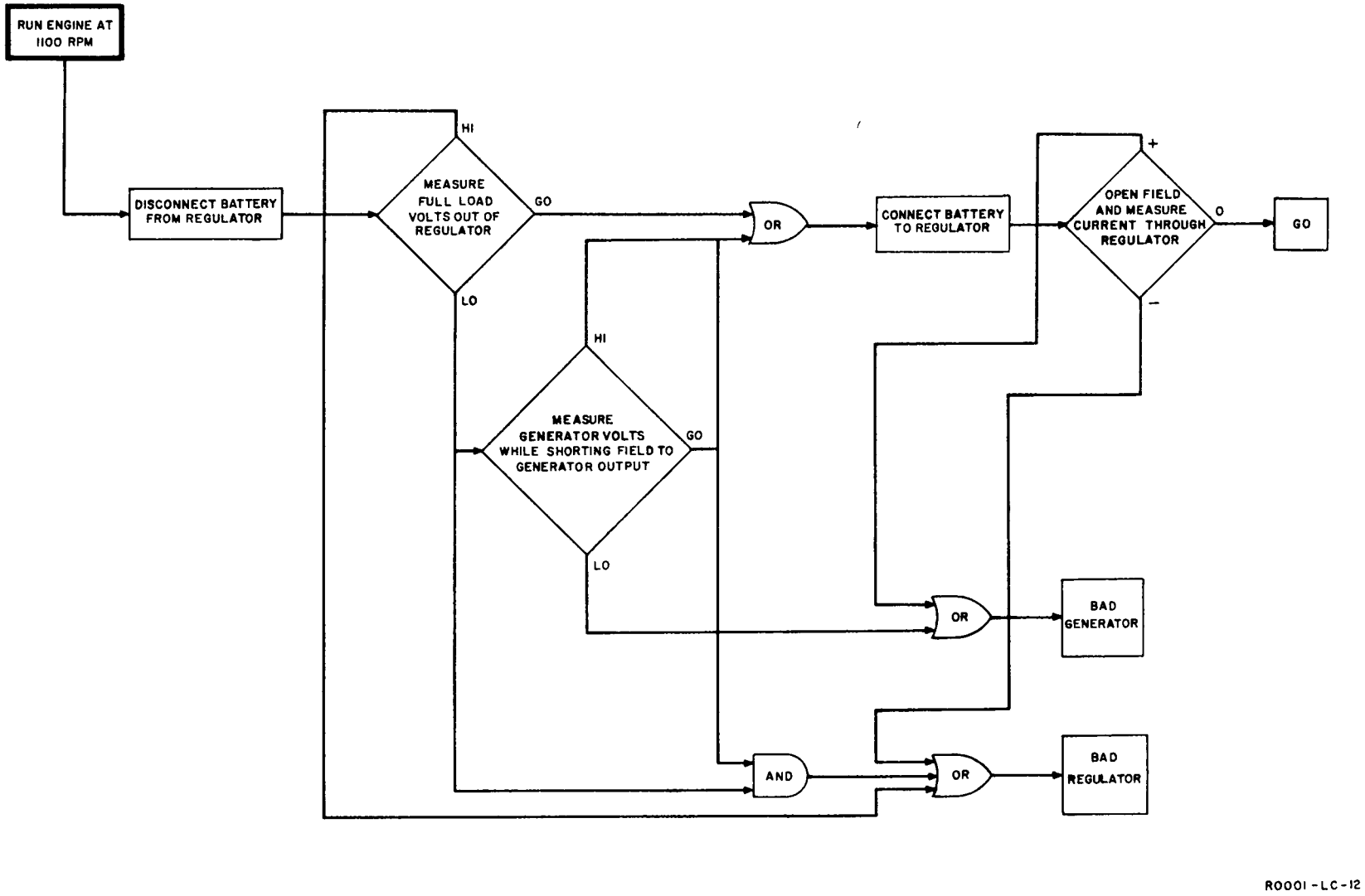


Figure 4-11. Generator-Regulator Subsystem Sequential Flow Logic Diagram

Disconnect the regulator output from the electrical system (open circuit at output adapter). Place a full load (25 amps minimum for the M151) on the regulator output. The voltage output should be between 27.0 and 27.5 volts. If the output is high, the regulator needs adjustment and should be replaced. If the output is low, the generator field is disconnected from the regulator and connected to the generator output. The generator output voltage should be 30 volts or greater. If it is 30 volts or greater, the regulator is malfunctioning and should be replaced. If the generator output voltage is low, the generator is defective and should be replaced. If the generator and regulator are good, disconnect the load, reconnect the battery, and open the generator field winding. The current through the regulator should drop to -0- amps. If the current is positive the generator has a malfunction; if the current is negative, the regulator has a malfunction.

d. Test Limitations and Justification

1) The regulator output is reflected back to the generator, thus eliminating the need to directly load the generator. If a faulty regulator prevents loading, this will be indicated by the voltage measurements.

2) A bad or high resistance regulator connection will indicate a faulty regulator.

3) A broken generator to regulator cable or broken or high resistance generator to regulator cable connector will result in a faulty regulator indication.

4) Low engine rpm during the generator test may cause low generator output which would indicate a faulty generator.

5) Slipping fan belts may cause a faulty generator indication.

## C. TEST EQUIPMENT

This section contains detailed descriptions and schematic drawings of interface connectors and transducing circuitry needed for automatic test equipment interface and signal conditioning. Equipment pertinent to each subsystem is described under the

subsystem heading. Some interface equipment has been described in the Test Procedures under initial hookup requirements.

1. Battery Subsystem

a) For battery interface, four battery clamp/terminal clamps as shown in figure 4-12 are needed. The main body clamp portion makes contact with the battery terminal clamp while the terminal probe makes contact with the battery terminal. The terminal probe is shown in figure 4-13.

b) A ground clamp for connection to either the battery ground cable chassis lug or to the exhaust manifold is needed. This clamp is a large alligator-type clip.

2. Starter Subsystem

a) A connection to the starter terminal will be made utilizing a large alligator-type clip with good insulation to prevent accidental grounding.

b) The current probe for interfacing with the starter cable will be the FRE-21976-DC Current Transducer developed at Frankford Arsenal.

3. Electric Fuel Pump Subsystem

a) An adaptor must be made to fit between the fuel pump input and the connector on wire 77. This consists of a short piece of wire spliced to a test lead in the middle and with a male connector on one end and a female connector on the other end to mate with the quick disconnect terminals used throughout the vehicle.

b) An adaptor must be made to fit between the fuel pump and carburetor containing a pressure transducer. This consists of a short piece of steel tubing the same diameter as that used at the ends of the fuel line, with a tee connection in the middle to accommodate the pressure transducer and with a small piece of flexible line at one end to allow interconnection.

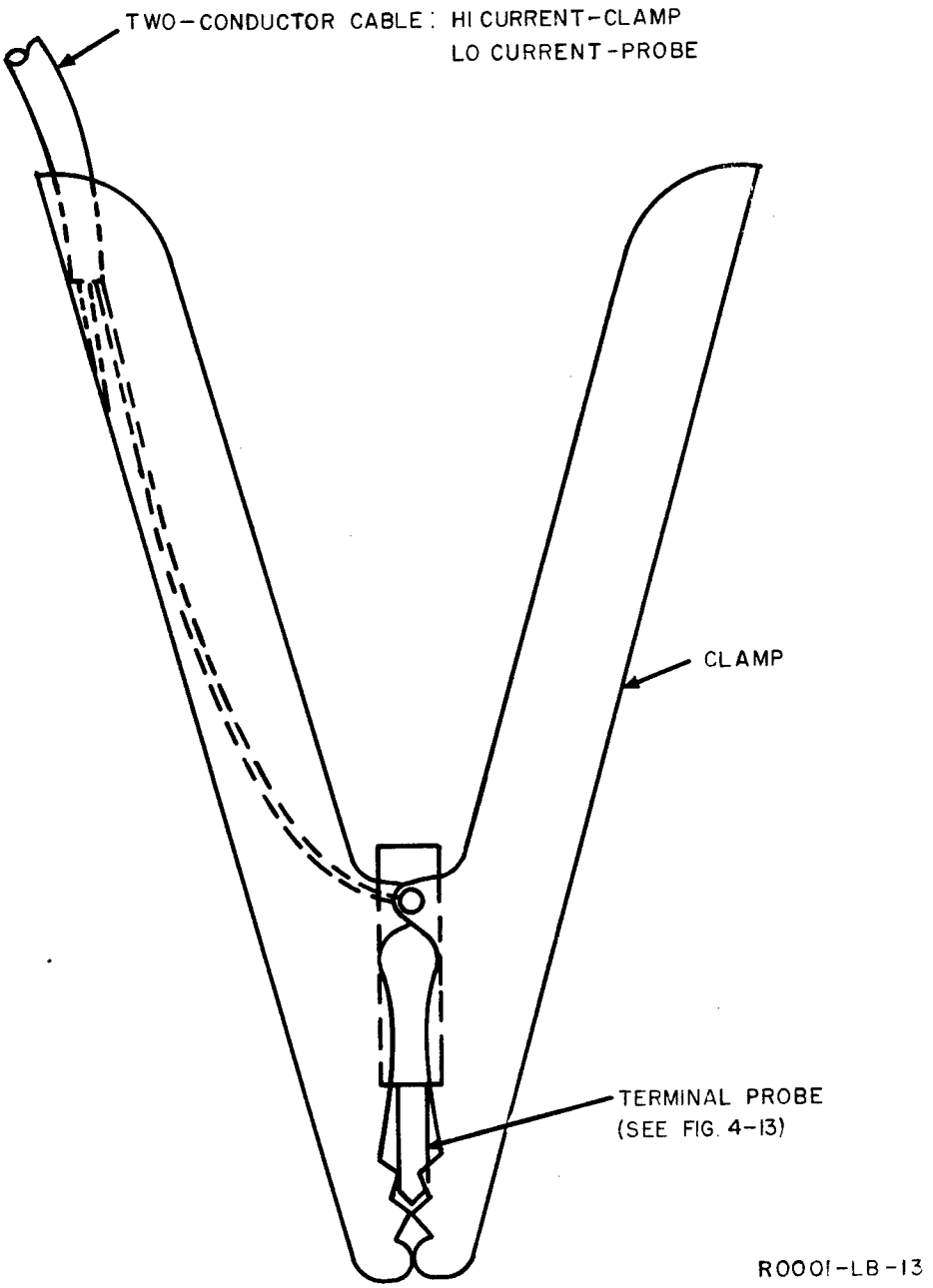


Figure 4-12. Battery Test Clamp

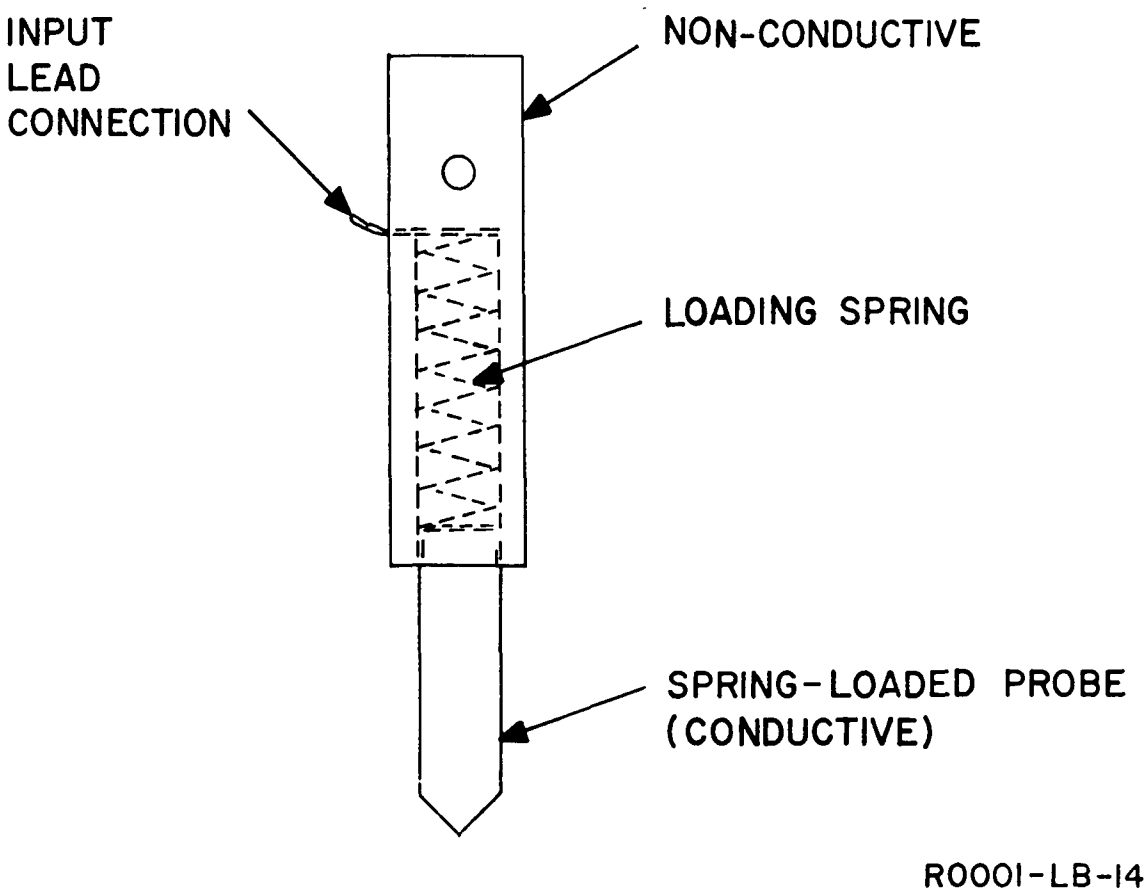


Figure 4-13. Terminal Probe

c) A test lead for diagnostics must be made with a connector to mate with the cable to the oil pressure safety switch. This will be a three-wire cable terminated with two relays which may be energized by the automatic control circuitry.

4. Ignition Subsystem

a) An adaptor must be made to fit between the distributor input and the connector on wire 12. The adaptor will contain an ammeter shunt and provide access to each end of the shunt resistor.

b) Color-coded test leads terminated with alligator clips are used to interface with the ignition coil primary terminals for diagnostics with the distributor cap removed.

c) Color-coded test leads terminated with alligator clips are used to interface with the ignition switch terminals for diagnostics with the switch removed

from the dashboard. The quick-disconnect terminals on the ignition switch are pulled out of the insulated carriers and reconnected only far enough to make good contact. This leaves enough bare contact to allow connection of a minigator clip for test lead hookup. An alternative to this would be to make a special adaptor to be placed between the wires and the ignition switch itself. This would allow test lead hookup.

d) The breaker points are monitored for open and closed conditions to provide a basis for dwell measurement and timing and for other functions which depend on breaker point position. This is accomplished with a simple diode transistor logic nand gate as shown in figure 4-14. This circuit is unique only in that the diodes must be at least 400 prv and the input current small enough to not significantly affect the voltage drop across the breaker points. The input parameters for this circuit are approximately 1.0 volt or less for a logic zero and 2.0 volts or more for logic one.

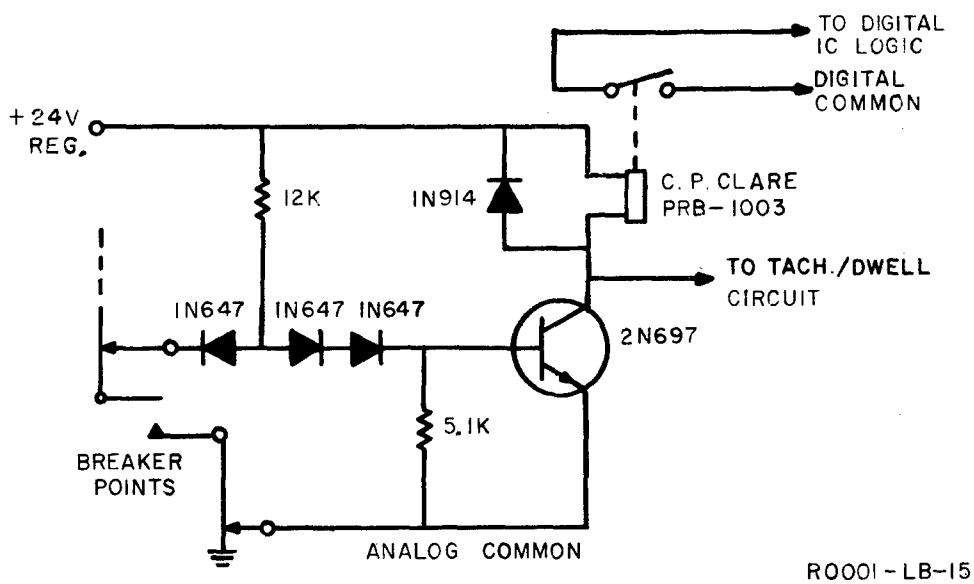


Figure 4-14. Breaker Point Interface

e) The dwell angle and tachometer measurements are taken from the breaker point interface in a manner similar to that used in most commercial tachometer/dwellmeter circuits except that an integrator or averaging circuit replaces the analog meter as the output device. The output of this circuit is an analog DC voltage which may be automatically evaluated by comparator or level detector circuits to become digital GO/NO-GO information. (See figure 4-15.)

f) DC voltages at various points, whether they be referenced to ground or to some other point, will be evaluated with differential or scaling amplifiers and level detectors. The differential amplifiers or scaling amplifiers will form the electrical interface to the vehicle and their outputs will have a level detector for each limit to be tested. Figure 4-16 is an example of interface circuit for detecting a voltage equal to the voltage at the positive battery terminal plus zero, minus 0.2 VDC.

g) The breaker point capacitor may be measured by application of a 15 kHz sinusoidal voltage through a voltage divider configuration as shown in figure 4-17. The frequency accuracy of this oscillator is not critical because the reference component in the top of the divider is also a capacitor ($C_{ref.}$) and will cancel the effects of frequency drift. 15 kHz was chosen as nominal because at this frequency, the reactance of the breaker point capacitor is about 40 ohms as compared to several kilohms for the ignition coil primary. The breaker point capacitor may, therefore, be measured without any significant effect from the ignition coil, ballast resistor or feedthru capacitor. $C_{ref.}$ is chosen to be equal to the nominal value for the breaker point capacitor, therefore, the AC voltage at the breaker points should be equal to 1/2 the AC reference at the nominal value and indirectly proportional to the deviation from nominal. The input amplifier has a gain of 2 and will have an output equal to the AC reference for a nominal breaker point capacitor. This output and the AC reference are both rectified and filtered in exactly the same manner to produce proportional DC voltages ($e_1$ and $e_2$). These DC voltages are

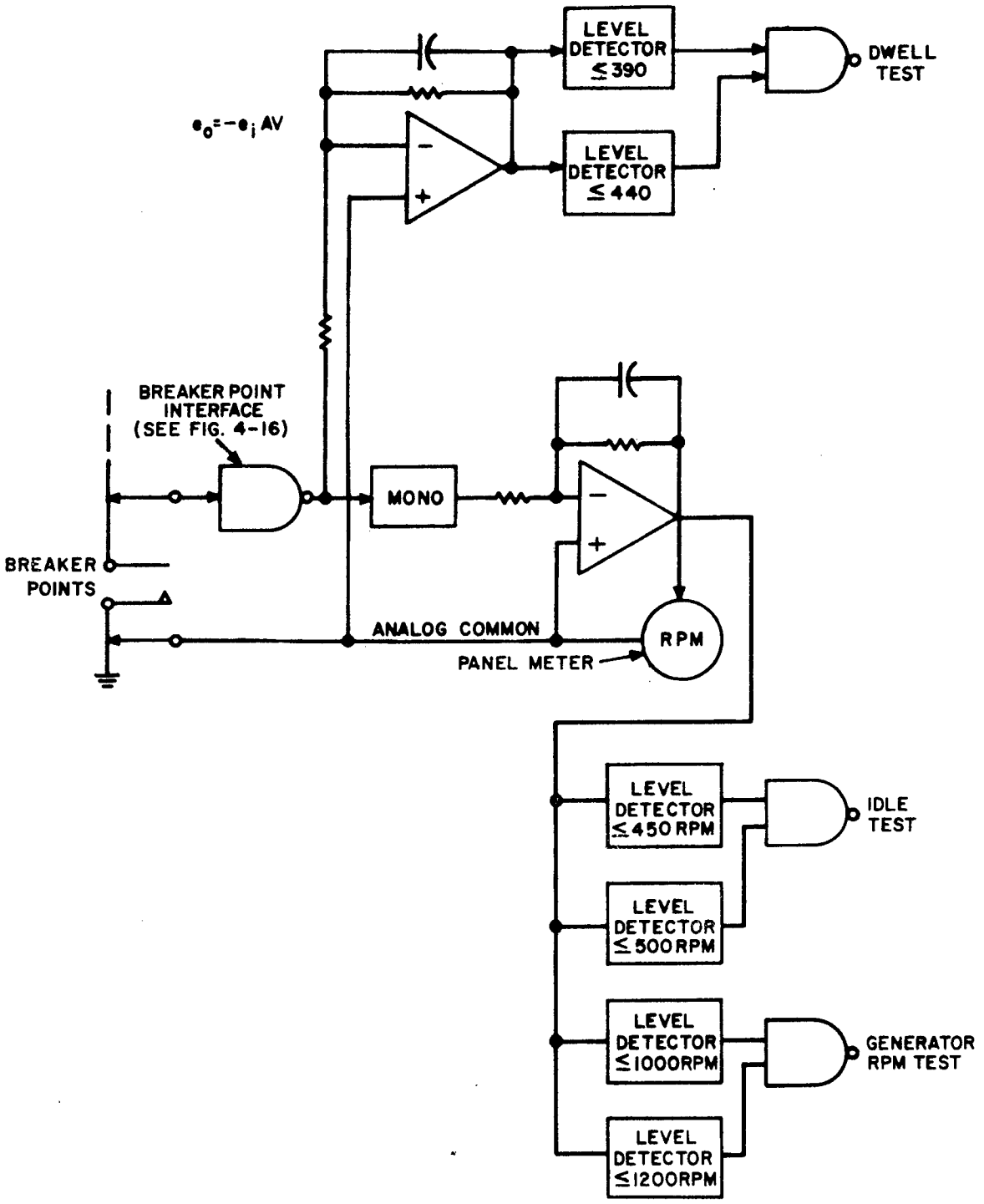


Figure 4-15. Tachometer/Dwellmeter

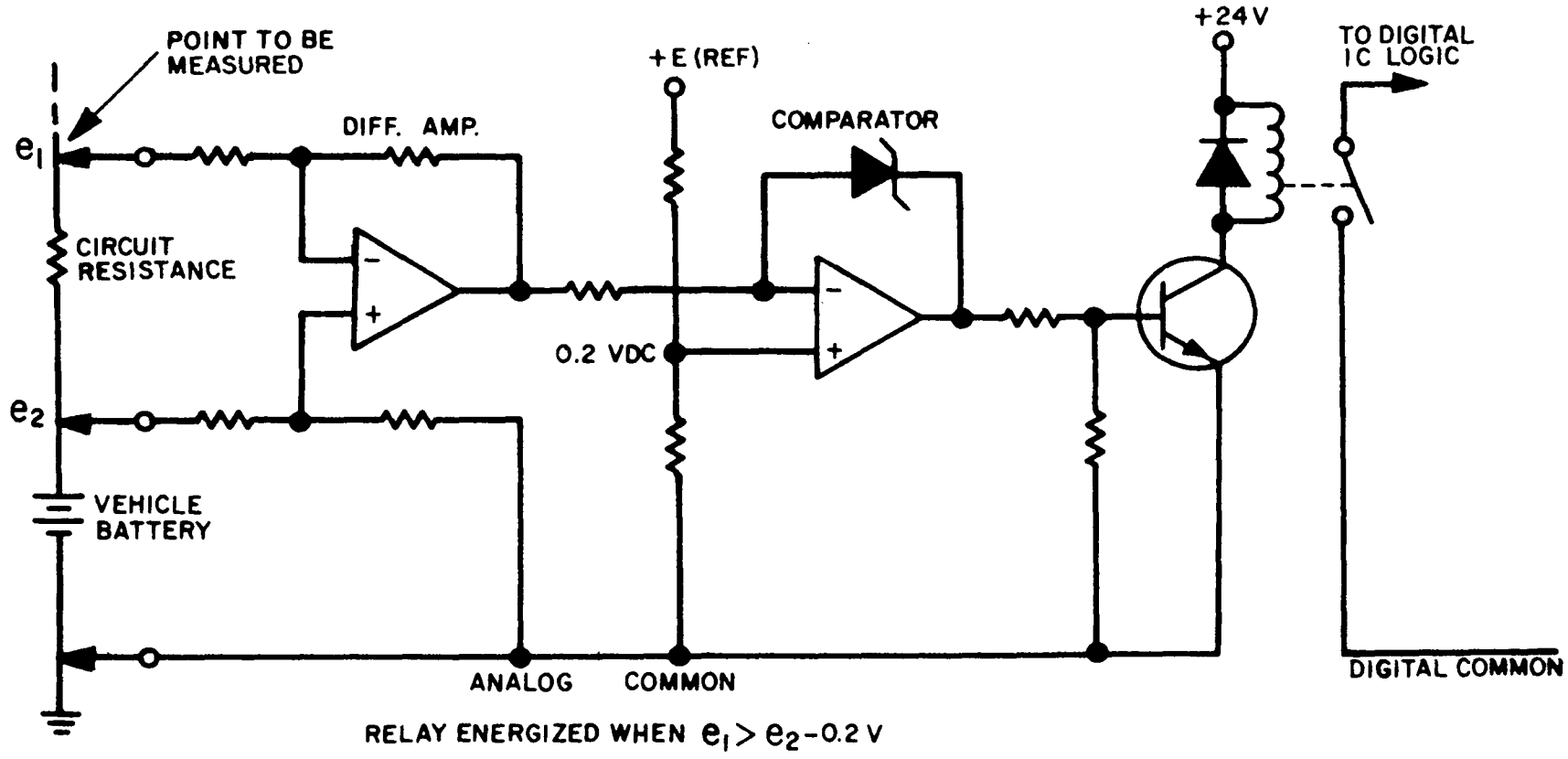


Figure 4-16. DC Measurement Interface

compared in a difference amplifier to produce a DC error voltage which is indirectly proportional to the deviation from nominal breaker point capacitance; $e_1$ is buffered with a voltage follower to produce a DC reference voltage. This voltage is divided in proper proportions to produce a reference for high limit comparator. Note that all voltage references are taken from the 15 kHz oscillator which eliminates the need for precise amplitude control of the AC voltage.

h) The spark plug voltage may be continuously monitored during the various test conditions by a peak-reading kilovoltmeter circuit as shown in figure 4-18. This is basically a scaling amplifier and a sample and hold circuit. The scaling amplifier transforms the 4-megohm input impedance to a low impedance suitable to charge the capacitor in the sample and hold circuit. This amplifier has a gain of 0.00025 in this circuit and must have a slew rate of about 20V/us in order to track the HV waveform. The output of the sample and hold circuit is a DC voltage initially at 0.00025 x HV and linearly ramping down to zero due to the input current of the amplifier and the various leakage currents. This output may be interrogated with level detectors to verify that the spark plug voltage is within specified limits. The output may be reset to zero at any time by a relay or switch and will normally retain the highest peak value that has been observed at the input for a period long enough to enable operation of the level detectors and logic memory.

i) The firing order of the vehicles may be verified by inserting the logic outputs from the respective level detectors into a bank of RS flip-flops and gating matrix as shown in figure 4-19. In this circuit, the presence of HV at a spark plug sets the respective flip-flop and the detection of HV at the next sequential spark plug resets the same flip-flop. In the normal sequence, only one flip-flop is set at a time and the set output is gated with all of the other reset outputs to produce a verification for that step. The individual steps are gated to form a continuous "GO" input to the final flip-flop which will change state if any of the verification bits are missing to form an

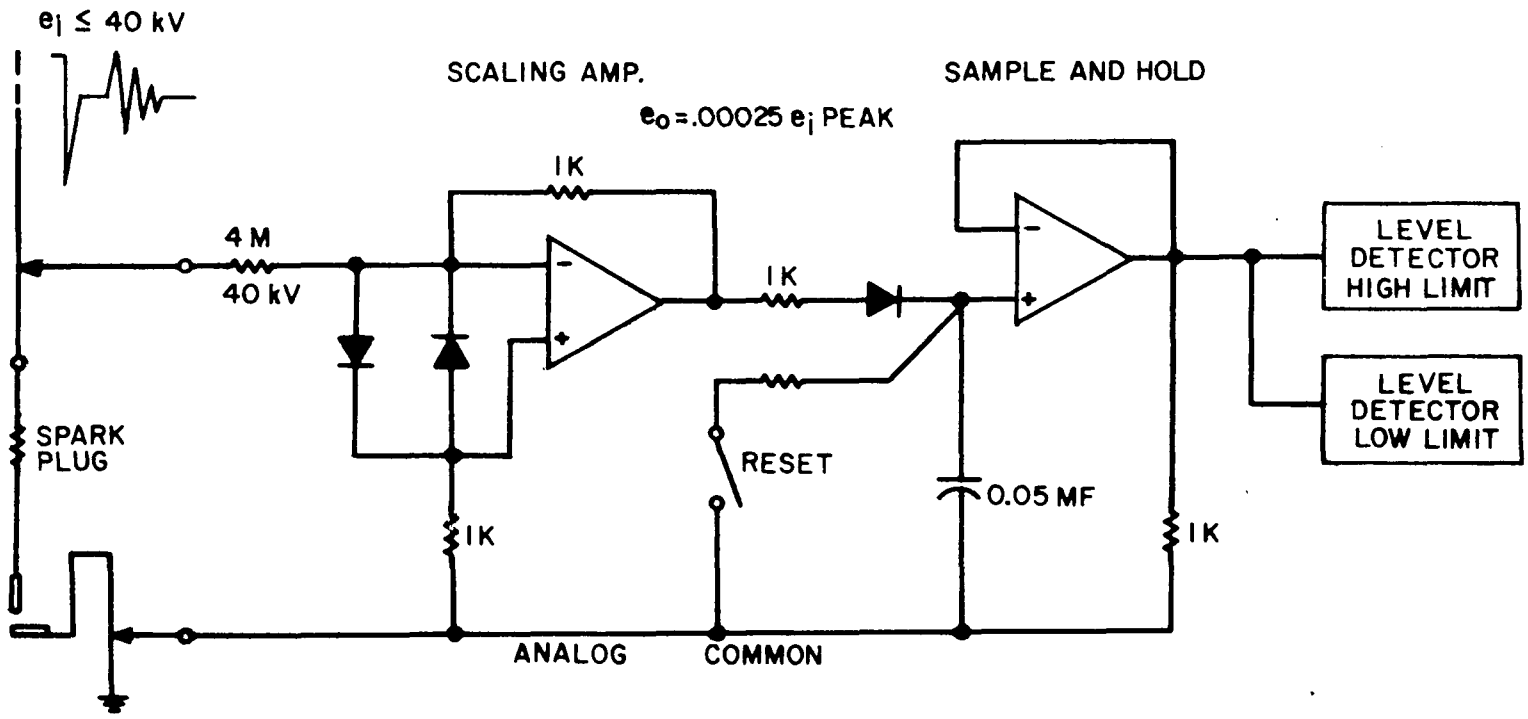


Figure 4-18. Peak-Reading Kilovoltmeter

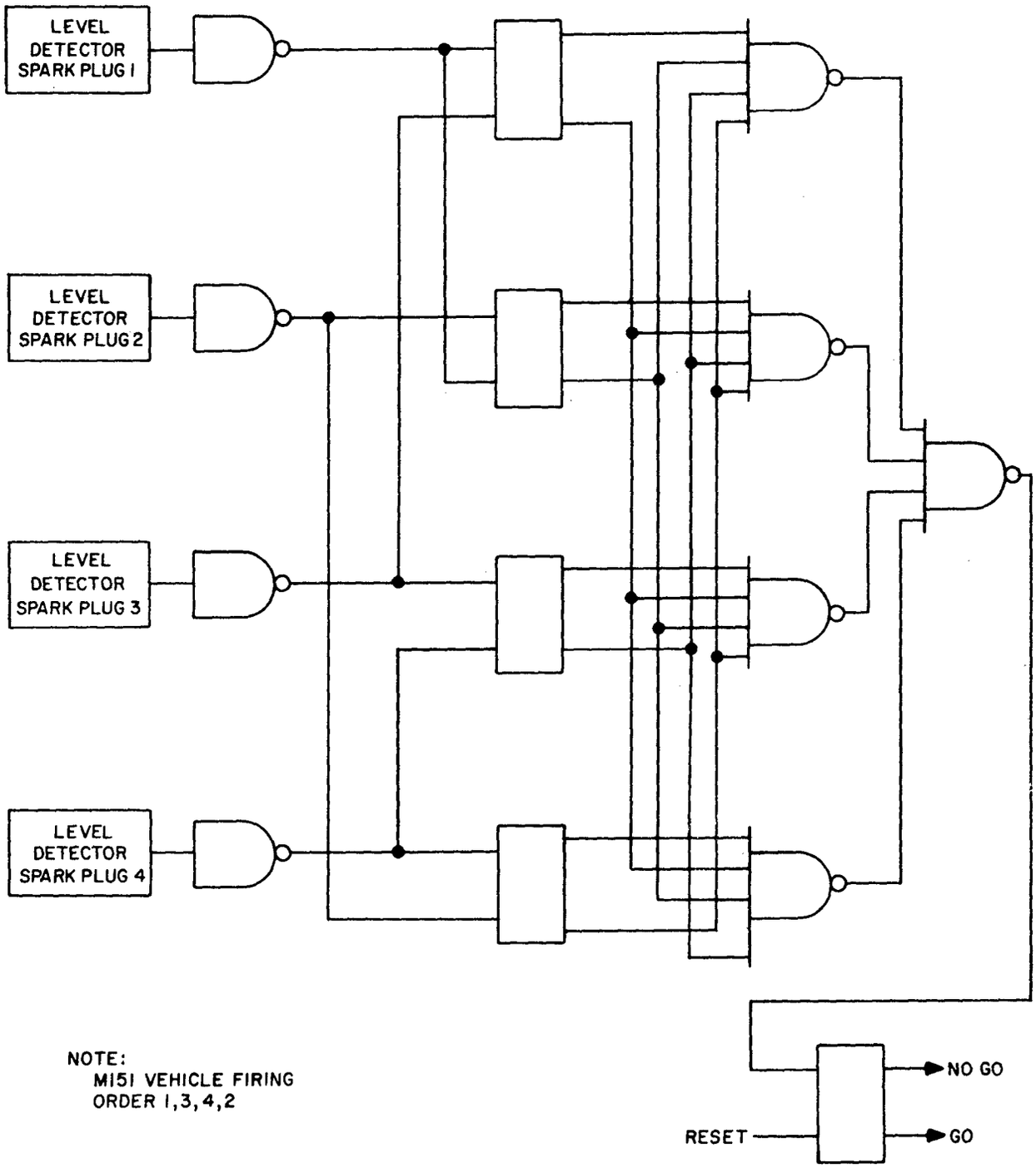


Figure 4-19. Firing Order Verifier

inconsistency. This circuit configuration may be used for any number of cylinders or firing order by adding flip-flops and gates or reversing input lines.

5. Generator-Regulator Subsystem

a) Adapter 17-A-2987-75 is used to interface with the generator. The generator output is fed through the connector while the field circuit is interrupted for test loading. Figure 4-20 is a diagram of the connector.

b) Adapter 17-A-2987-50 is used to interface with the regulator. The regulator output is interrupted for monitoring and loading. This connector is shown in figure 4-21.

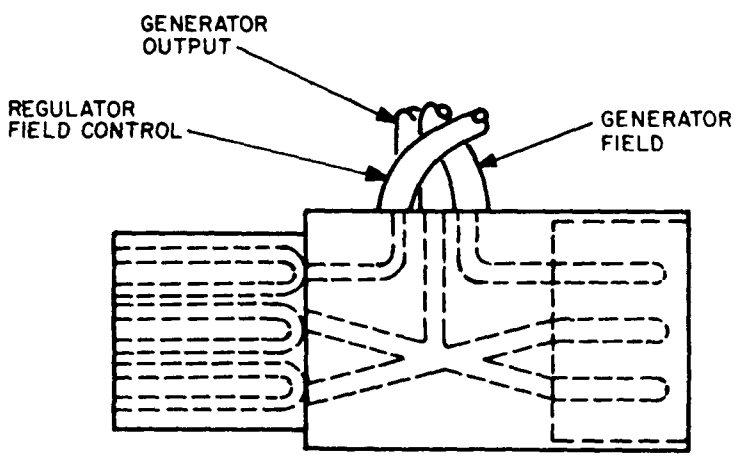


Figure 4-20. Generator Test Adapter

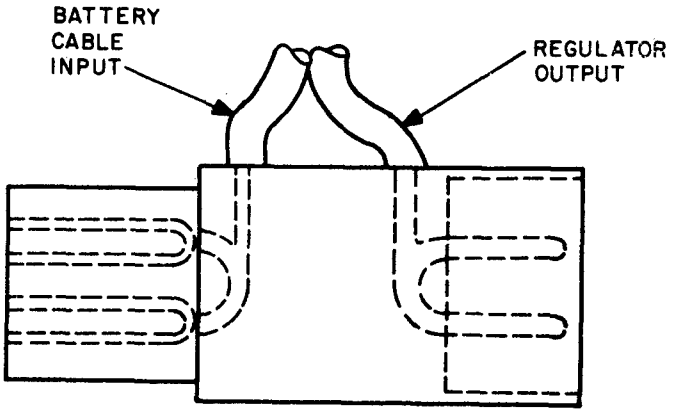


Figure 4-21. Regulator Test Adapter

# VI. CONCLUSIONS AND RECOMMENDATIONS

## A. FEASIBILITY OF AUTOMATIC TEST EQUIPMENT

Fault isolating automatic test equipment utilizing the test procedures described in this report is feasible and desirable for testing wheeled vehicle electrical systems. All operator actions are machine-directed and almost all operator decisions are eliminated. This combination insures positive fault isolation. Repair time is minimized in testing and part replacement; unnecessary part replacement is eliminated, thus reducing material costs.

## B. FUTURE AUTOMATIC TEST EQUIPMENT DEVELOPMENT

Westinghouse recommends that additional study time be invested in the following items for reasons stated:

1. The 421 Battery Test - this test was chosen as the best presently available test technique for automation where time of testing is essential. (See Section V, A.) Battery test techniques could be further developed in a study directed toward this goal.

2. The completely enclosed ignition coil secondary presents an access and measurement problem. To provide consistent and accurate measurements, our approach was to insert adapters in each spark plug lead for ignition secondary tests. While this approach provides complete test information, test equipment interface time is high compared to a single secondary connection. If an ignition secondary test point is not provided on future vehicles, further time should be expended on investigating and developing a comprehensive test technique and transducer for this parameter.

3. As an alternate to item 2, we feel that additional test information could be obtained from analysis of the ignition primary waveform. If a suitable test

technique were evolved from development in this area, redesign of the ignition distributor would be eliminated. Also, since the ignition primary is readily accessible for test interface, the need for a secondary interface transducer (item 2) would be eliminated.

4. A final recommendation for further development is a study of parameter limits to be applied to our test and fault isolation procedures. Parameters have been defined; only vehicle variations will effect test technique and parameter limits. Westinghouse is most anxious to explore this most important area.

## C. FUTURE BUILT-IN TEST POINTS

1. Diagnostic harnesses with connectors for direct connection to automatic test equipment should be made a part of standard vehicle wiring. Interface points directed or influenced by our test procedures would be made accessible for rapid interface thus reducing time required for test equipment hookup. Other advantages of this harness would be elimination of errors by incorrect multiple connections, minimum number of cables and adapters would be required with each test set, and a standard connector could be used on all vehicles.

2. To aid in diagnostic testing, the starter switch terminals should be made easily accessible. Presently, the switch must be removed from the vehicle for complete verification of its operation when diagnostics are performed on the starter system.

3. Referring to items 2 and 3 of Future Automatic Test Equipment Development section, a test point for the ignition secondary should be made available. The most direct approach to this would be modifying the distributor cap to provide a plugged connection (similar to the primary access) to the secondary conductor in the cap.

## D. SECONDARY SUBSYSTEMS

During our study to insure full investigation and effort on diagnostics and automatic test equipment for electrical subsystems which directly affect vehicle operation and reliability, the electrical system was divided into "prime" and "secondary" subsystems. The "prime" subsystems are those for which we have completed diagnostics and recommendations for automatic test equipment.

The "secondary" subsystems are: Lighting and main wiring system, Directional signals, and Instruments, gauges and horn. These subsystems do not require the operational fault isolation techniques as do the "prime" subsystems; the basic approach for testing the "secondary" subsystems would be an automatic circuit checker (continuity tests) with appropriate interface connectors.

Since our basic test philosophy depends on a suspected malfunctioning vehicle, these "secondary" subsystems need not be tested unless an obvious visual (audio) indication of malfunction is present. Also, these subsystems are independent of the "prime" operational subsystems and can be tested individually as required or as desired.

Automatic test equipment is directly applicable to the "secondary" subsystems as the test procedure consists of test point selection and continuity/resistance measurements.

## E. TEST PROCEDURES IMPLEMENTATION

The vehicle diagnostics automatic test equipment block diagram (figure 5-1) is our concept for implementation of the test procedures. The configuration shows control by a sequential digital controller unit directed by a diagnostic program. A small digital computer could be used for control.

Test information flows from left to right in the diagram. Vehicle/Test System Interface provides the system inputs. These inputs are broken into two groups: 1) inputs needed for operational "GO" testing, and 2) inputs required only for specific diagnostics.

Input signals are fed either through special signal conditioning circuits or directly to level detectors and/or comparators for processing. Finally, test conditions are gated and displayed via the system output. Operator actions are also directed by the output display.

# APPENDIX A
# SUBSYSTEM SCHEMATIC DIAGRAMS

Figures A-1 through A-5 are schematic diagrams of each electrical subsystem as diagnosed. These diagrams are all for the M151 vehicle. Slight modification or additions are necessary for other vehicles.

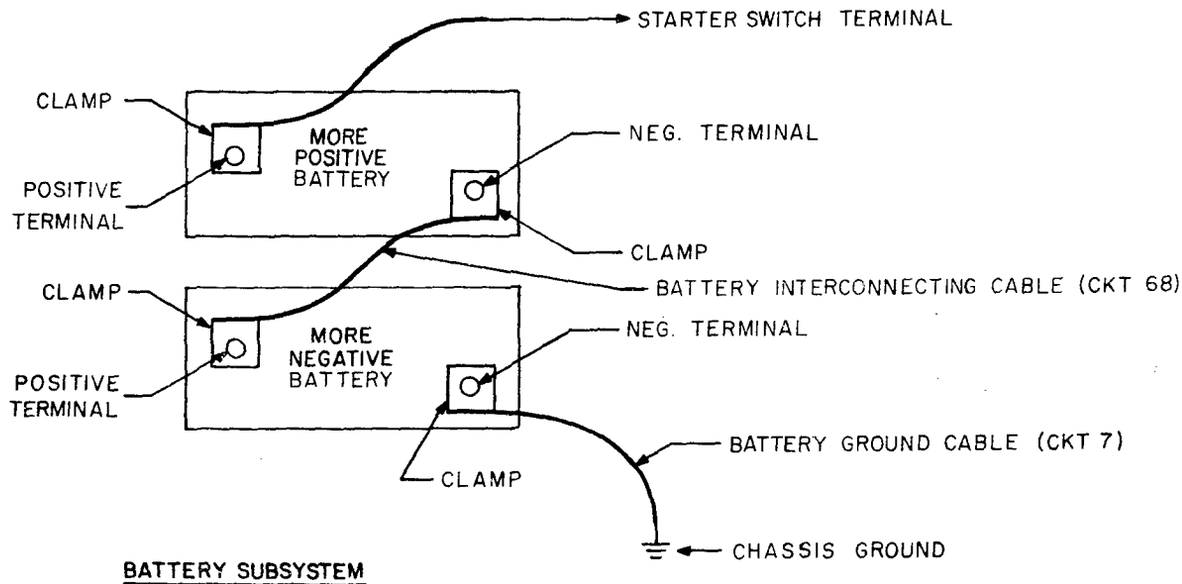


**BATTERY SUBSYSTEM**

A. MORE POSITIVE BATTERY
B. MORE NEGATIVE BATTERY
C. BATTERY CLAMP-MORE POSITIVE BATTERY, POSITIVE TERMINAL
D. BATTERY CLAMP-MORE POSITIVE BATTERY, NEGATIVE TERMINAL
E. BATTERY CLAMP-MORE NEGATIVE BATTERY, POSITIVE TERMINAL
F. BATTERY CLAMP-MORE NEGATIVE BATTERY, NEGATIVE TERMINAL
G. BATTERY INTERCONNECTING CABLE (CKT. 68)
H. BATTERY GROUND CABLE (CKT. 7)

R0001-LB-1

**Figure 1. Battery Subsystem M151 Vehicle**

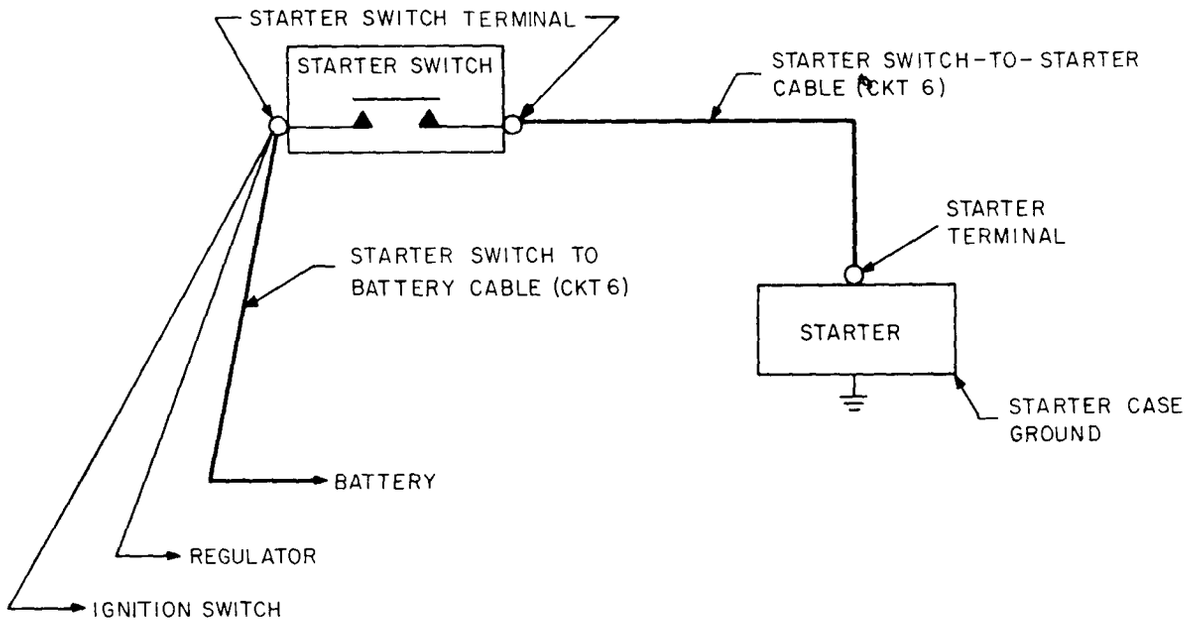


A. BATTERY-TO-STARTER SWITCH CABLE (CKT. 6)
B. STARTER SWITCH
C. STARTER-TO-STARTER SWITCH CABLE (CKT. 6)
D. STARTER

R0001-LB-2

Figure 2. Starter Subsystem M151 Vehicle

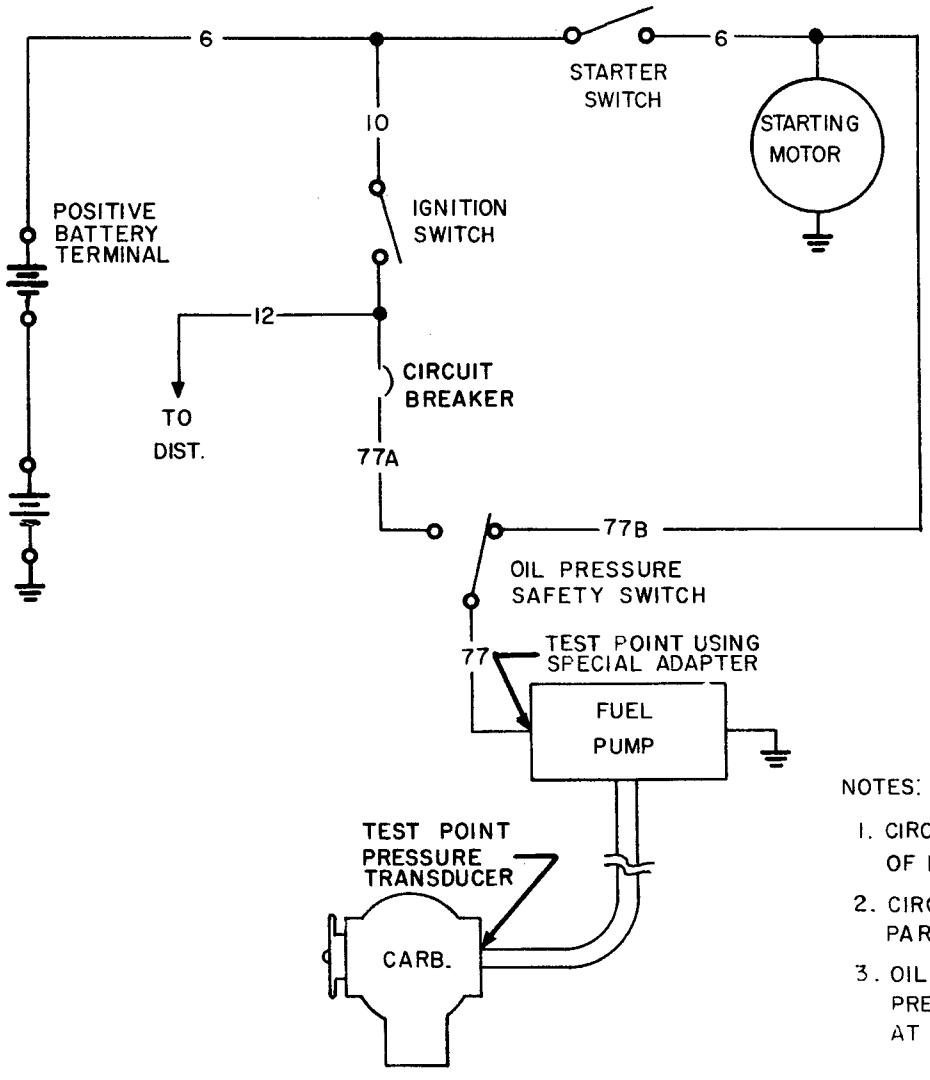


**ELEC. FUEL PUMP SUBSYSTEM**

A. FUEL PUMP
B. OIL PRESSURE SWITCH
C. CIRCUIT 77A
D. CIRCUIT 77B
E. CIRCUIT 77
F. CIRCUIT BREAKER

NOTES:

1. CIRCUIT 6 AND STARTER SWITCH ARE TESTED AS PART OF BATTERY AND STARTER SYSTEMS.
2. CIRCUITS 10 AND 12 AND IGNITION SWITCH ARE TESTED AS PART OF IGNITION SYSTEM.
3. OIL PRESSURE SAFETY SWITCH IS SHOWN IN ZERO PRESSURE OR DE-ENERGIZED POSITION. SWITCH THROWS AT 3 1/2 TO 7 1/2 PSI OIL PRESSURE.

R0001-LB-3

**Figure 3. Electric Fuel Pump Subsystem M151 Vehicle**

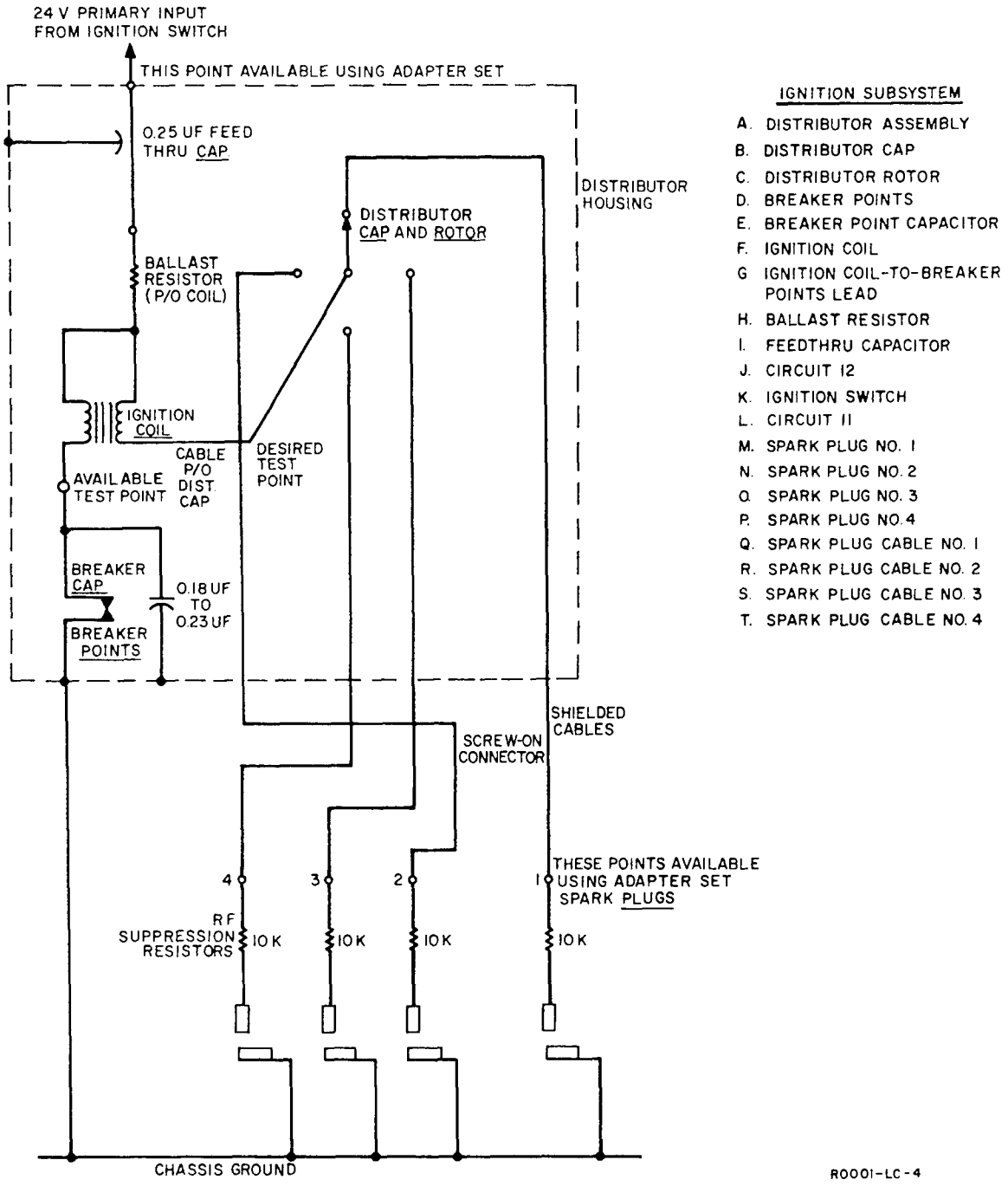


Figure 4. Ignition Subsystem M151 Vehicle

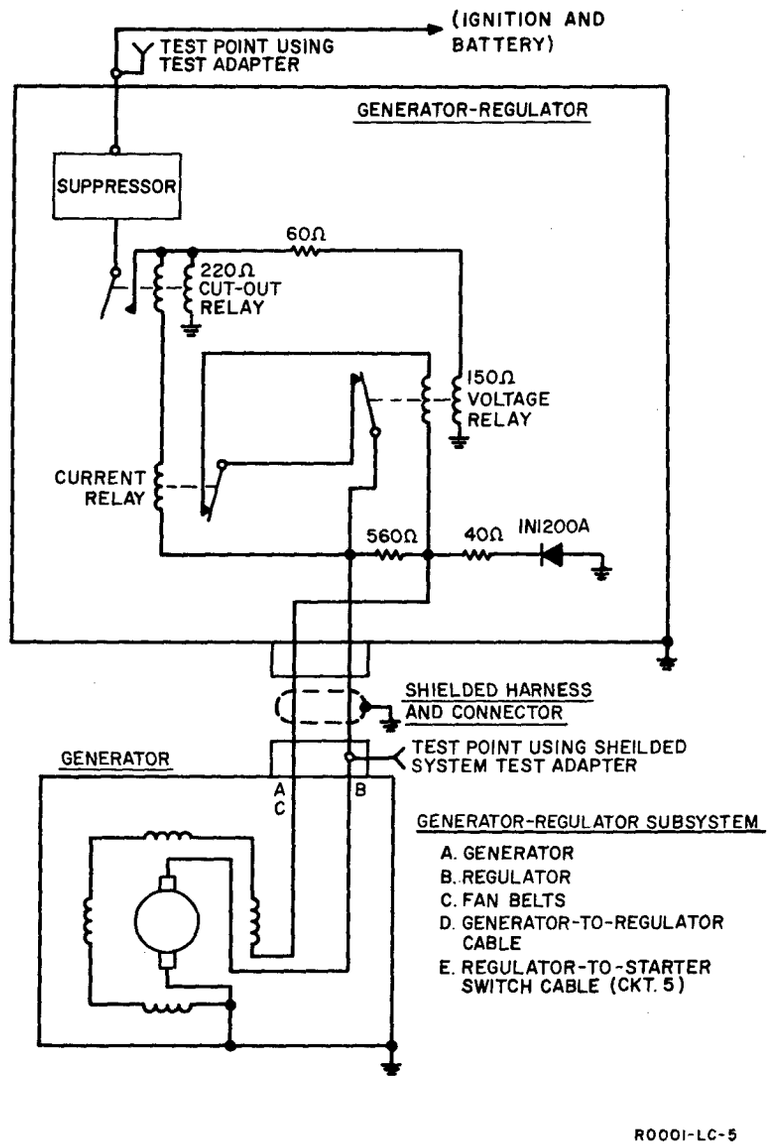


Figure 5. Generator-Regulator Subsystem M151 Vehicle

# APPENDIX B
# TEST POINT ANALYSIS

Existing Test Points in the Ignition, Battery, Generator/Regulator, and Starter subsystem were evaluated/analyzed as to accessibility, type of interface necessary, and completeness of subsystem measurements that could be made at these points. "Existing" was defined as a test point used in procedures called out in Dash 20 manuals and included those points made accessible through the use of adapters.

Each subsystem was also analyzed for the "desirability" of future or other test points than the existing ones. Determination of these desirable test points was based on accessibility, amount of information to be gathered by making measurements at this point and for completeness of checking the subsystems.

This appendix is a summary of the results of this analysis. Each subsystem is divided into two categories - existing and desirable test points. If a test point is useful in checking more than one subsystem, reference is made to that fact. Desirable test points have been broken out to emphasize those that are presently feasible and those that are recommendations for the future.

## B-I. BATTERY SUBSYSTEM

### A. Existing Test Points

| LOCATION | ACCESSIBILITY | INTERFACE | MEASUREMENT | COMMENTS |
|---|---|---|---|---|
| 1. 4 Battery terminals | Good, grease covered, cables may be removed | Clamp-on connector, with or without battery cables removed | Voltage | Grease should be removed for good contact, removing & replacing clamps on terminals can create future failures. |
| 2. Battery cables | Good | Remove cables and insert shunt adapter and ammeter in circuit | Current | Problems can arise when removing cables, poor connections can result. |
| 3. Chassis grounds | Good | Clamps | Ground reference | Cable voltage drops can be made by checking battery terminal to chassis. |
| 4. Starter switch | | | | (See Section IV, A.) |

### B. Desirable Test Points

| | | | | |
|---|---|---|---|---|
| 1. Battery cables | Good | Hall effect clamp-on probe | Current | Special probe and calibration equipment required. Some tests for current drawing subsystems can be made at this point. |

## B-II. GENERATOR-REGULATOR SUBSYSTEM

### A. Existing Test Points

| LOCATION | ACCESSIBILITY | INTERFACE | MEASUREMENT | COMMENTS |
|---|---|---|---|---|
| 1. Generator output | Good | Adapters | Current, voltage generator output | All generator tests can be made at this point with necessary loads and measurements made through the adapter. |
| 2. Regulator output | Good | Adapters | Current, voltage, cutout, current regulation, voltage regulation | |

### B. Desirable Test Points

All subsystems tests can be made using existing test points; however, test connections can be combined for more efficiency.

## B-III. STARTER SUBSYSTEM

### A. Existing Test Points

| | | | | |
|---|---|---|---|---|
| 1. Starter terminal | Poor | Clamp | Voltage | Not easily reached, point must be used for voltage checks |
| 2. Starter switch | Bad | Not presently used | Voltage | Tests made only when switch malfunction suspected. |

| LOCATION | ACCESSIBILITY | INTERFACE | MEASUREMENT | COMMENTS |
|---|---|---|---|---|
| B. | Desirable Test Points | | | |
| 1. Battery cable | Good | Clamp-on Hall probe | Current | Combined with battery tests |
| **B-IV. IGNITION SUBSYSTEM** | | | | |
| A. | Existing Test Points | | | |
| 1. Primary input | Good | Adapters | Voltage, primary supply from ignition switch | Battery voltage indicates good condition |
| 2. Breaker points | Good | Adapter | Voltage, dwell angle, current | Voltage drop across points and continuity of primary can be measured at this point. Primary current can be measured when points are open. |
| 3. Ignition switch circuit 12 terminal | Bad | Probe or clamp | Voltage | Voltage drop across switch measured here. Indicates voltage drop across ckt. 12 in harness. |
| 4. Ignition switch circuit 11 | Bad | Probe or clamp | Voltage | Voltage drop across ckt. 11 in harness measured here. Indicates voltage drop across ignition switch. |

| LOCATION | ACCESSIBILITY | INTERFACE | MEASUREMENT | COMMENTS |
|---|---|---|---|---|
| 5. Spark plug | Good | Adapter | Voltage, timing | Timing light may be attached here. Any cylinder may be interfaced. Peak voltage could be measured. |
| B. | Desirable Test Points | | | |
| 1. Ignition coil, secondary | Bad, dist. cap must be removed | Probe | Voltage (waveform or DC) | Continuity of secondary may be measured as this point. Peak voltage could be measured. Composite waveform could be used to evaluate entire secondary system; spark plugs, cables, cap, etc. |
| 2. Ignition coil, input | Bad, dist. cap must be removed | Probe or clamp | Voltage | Ballast resistance can be measured at this point. Indicates condition of coil primary. |

# APPENDIX C
# FAATE CHARTS

This appendix contains FAATE charts that can be used for Fault Isolation in the Battery and Starter, Ignition, and Generator-Regulator Subsystems. They can be used in their present form for troubleshooting the M151 Vehicle's electrical system.

The symbols found in the FAATE charts are defined as follows:

Rectangle - Encloses an "Instruction" (Instr.) to be performed by the tester. The instruction is identified by a "letter" found in the upper left-hand corner of the rectangle.

Diamond - Encloses a "Test Node" (TN) and requires a decision of Yes or No, GO or NO-GO, or HI, LO, or GO. The test node is identified by a "number" above the left point of the diamond.

Circle - Encloses a transfer instruction or reveals the last test node or decision investigated.

Square - Encloses the component to which the fault has been isolated.

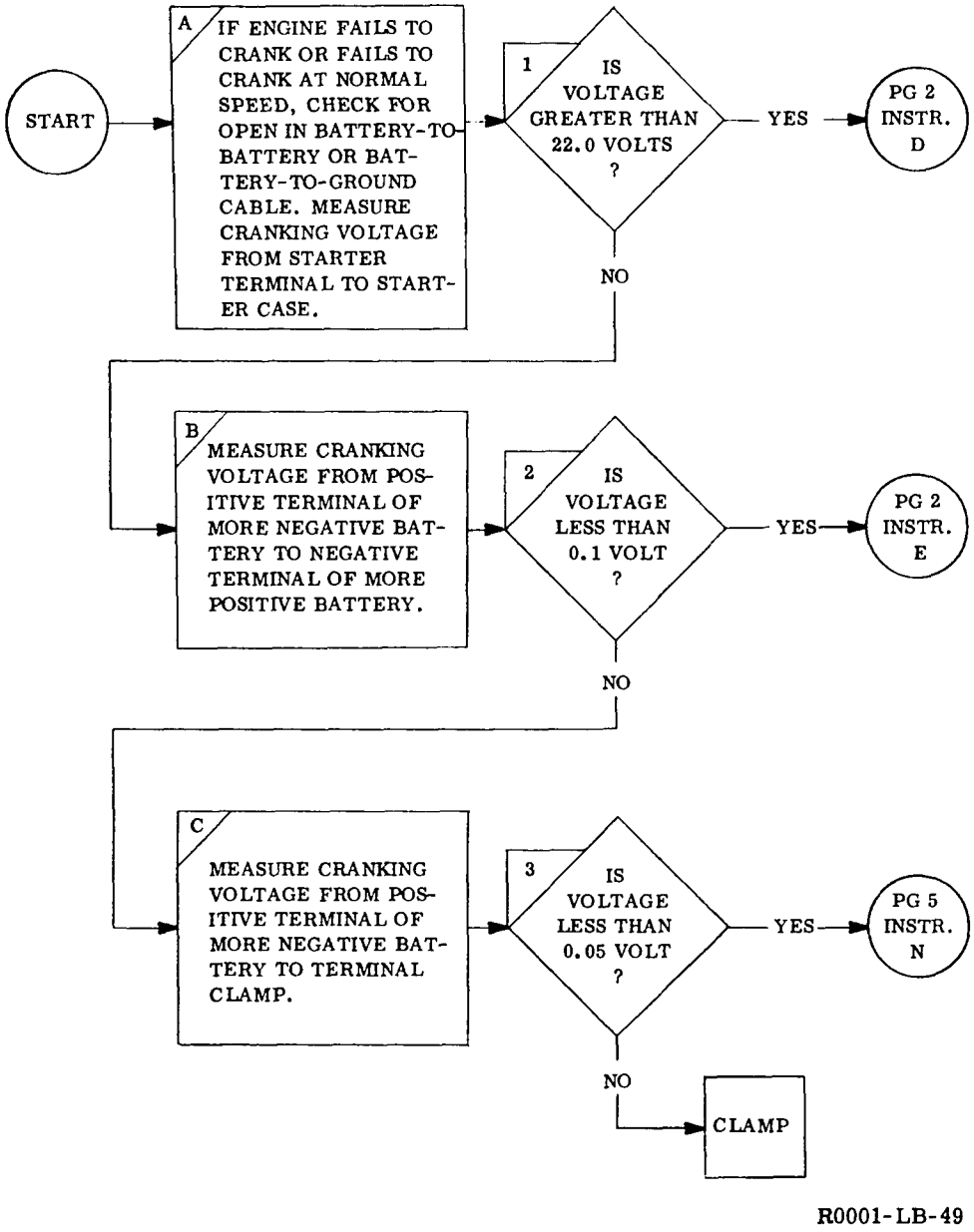


Figure C-1. Battery and Starter Subsystem FAATE Chart (Page 1)

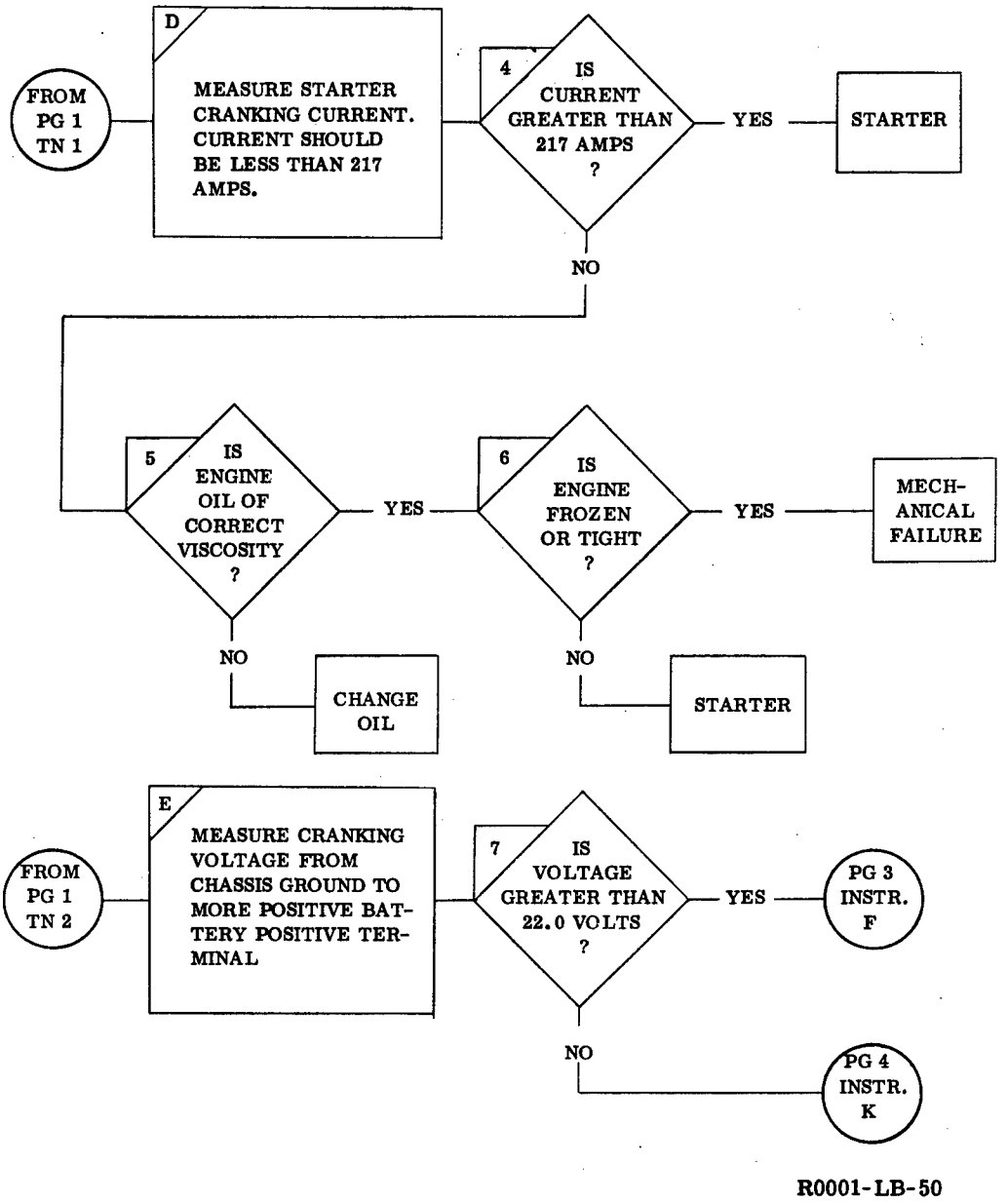


Figure C-1. Battery and Starter Subsystem FAATE Chart (Page 2)

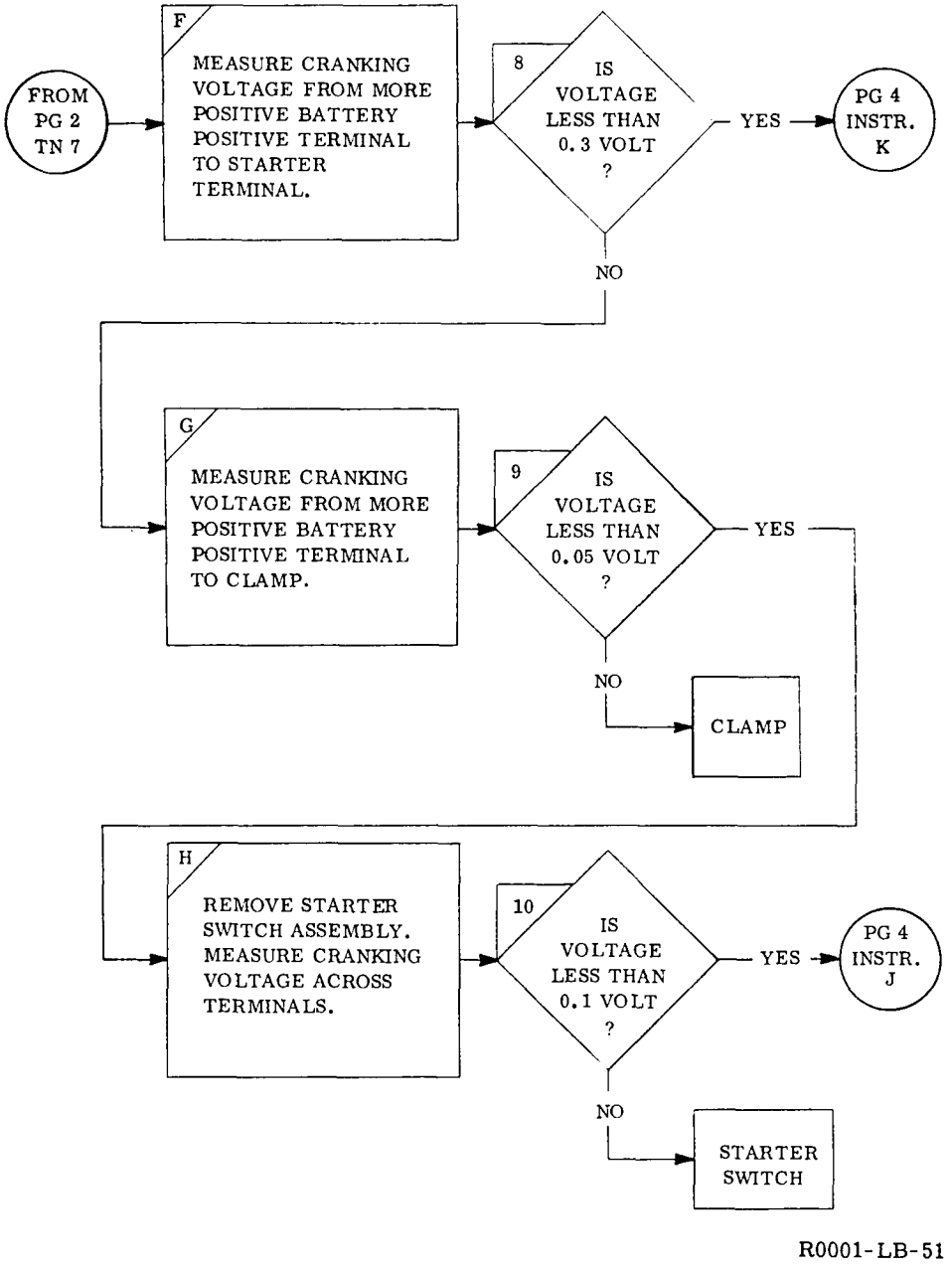


Figure C-1. Battery and Starter Subsystem FAATE Chart (Page 3)

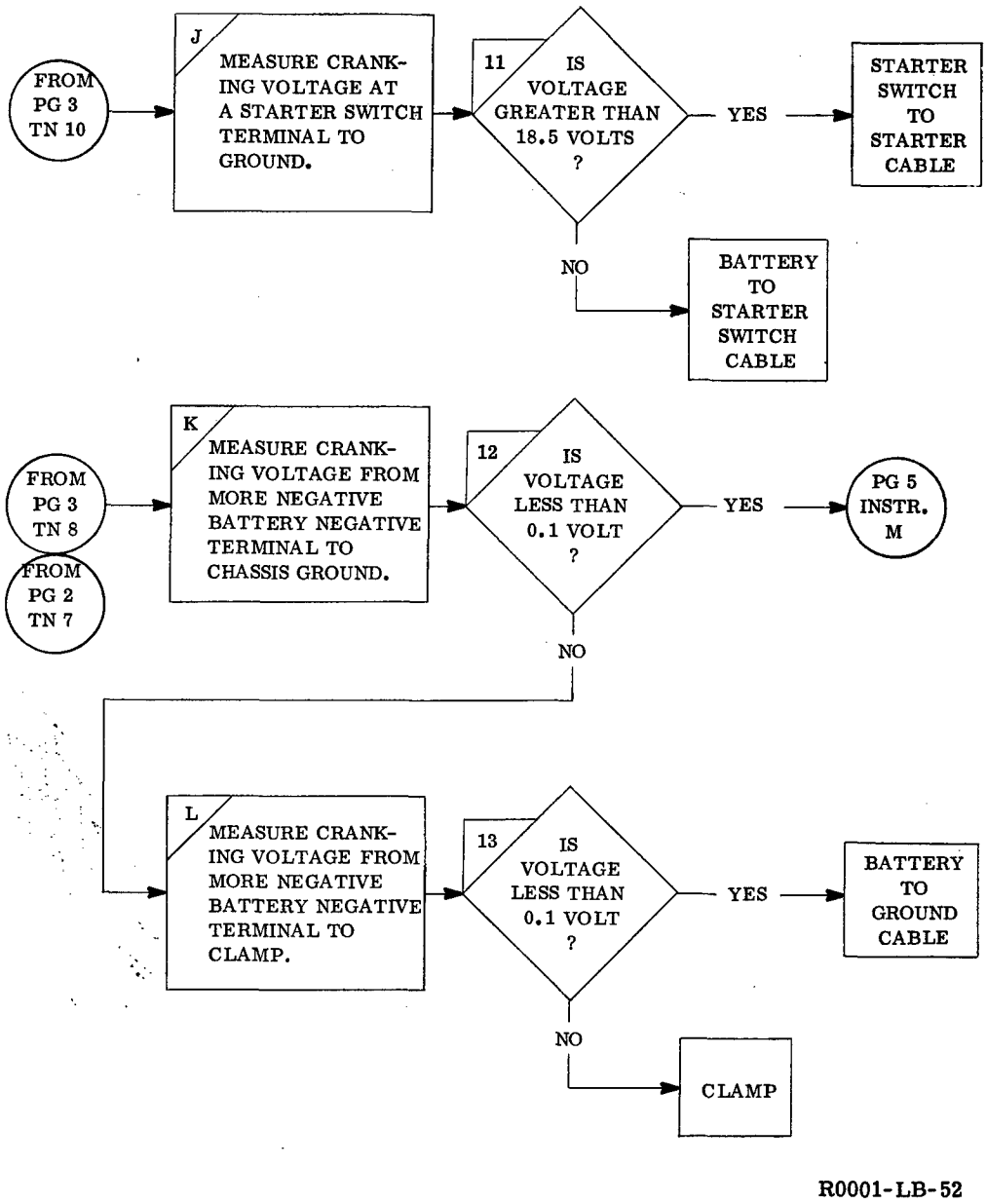


Figure C-1. Battery and Starter Subsystem FAATE Chart (Page 4)

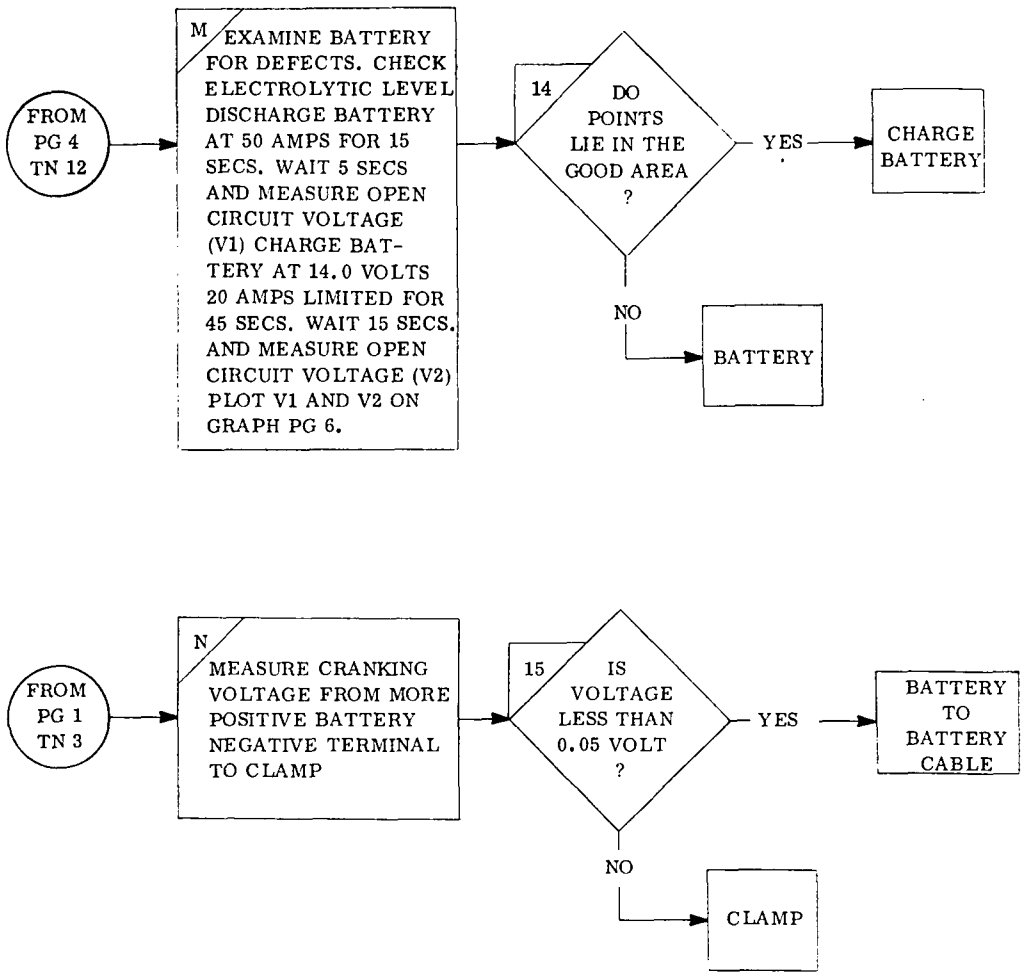


Figure C-1. Battery and Starter Subsytem FAATE Chart (Page 5)

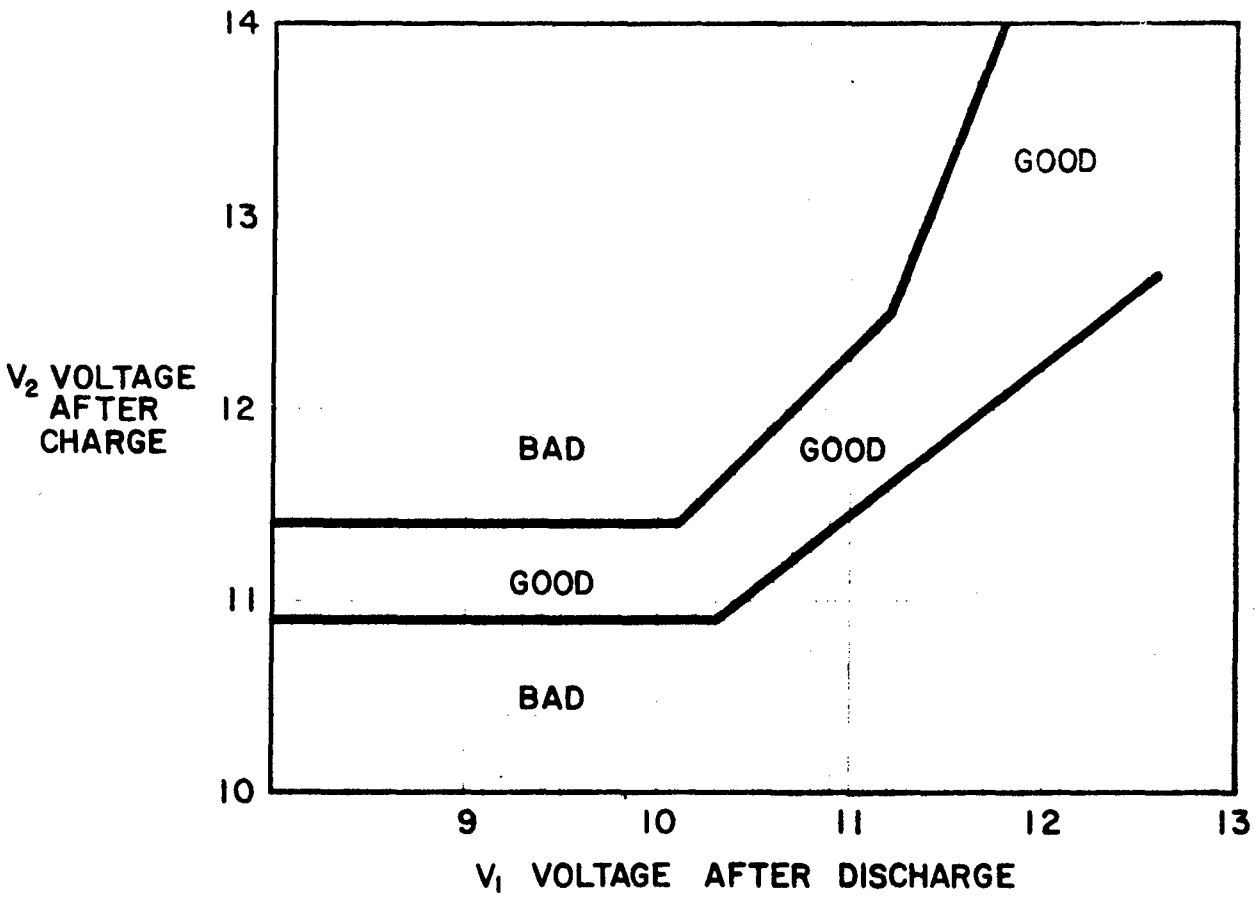


Figure C-1. Battery and Starter Subsystem FAATE Chart (Page 6)

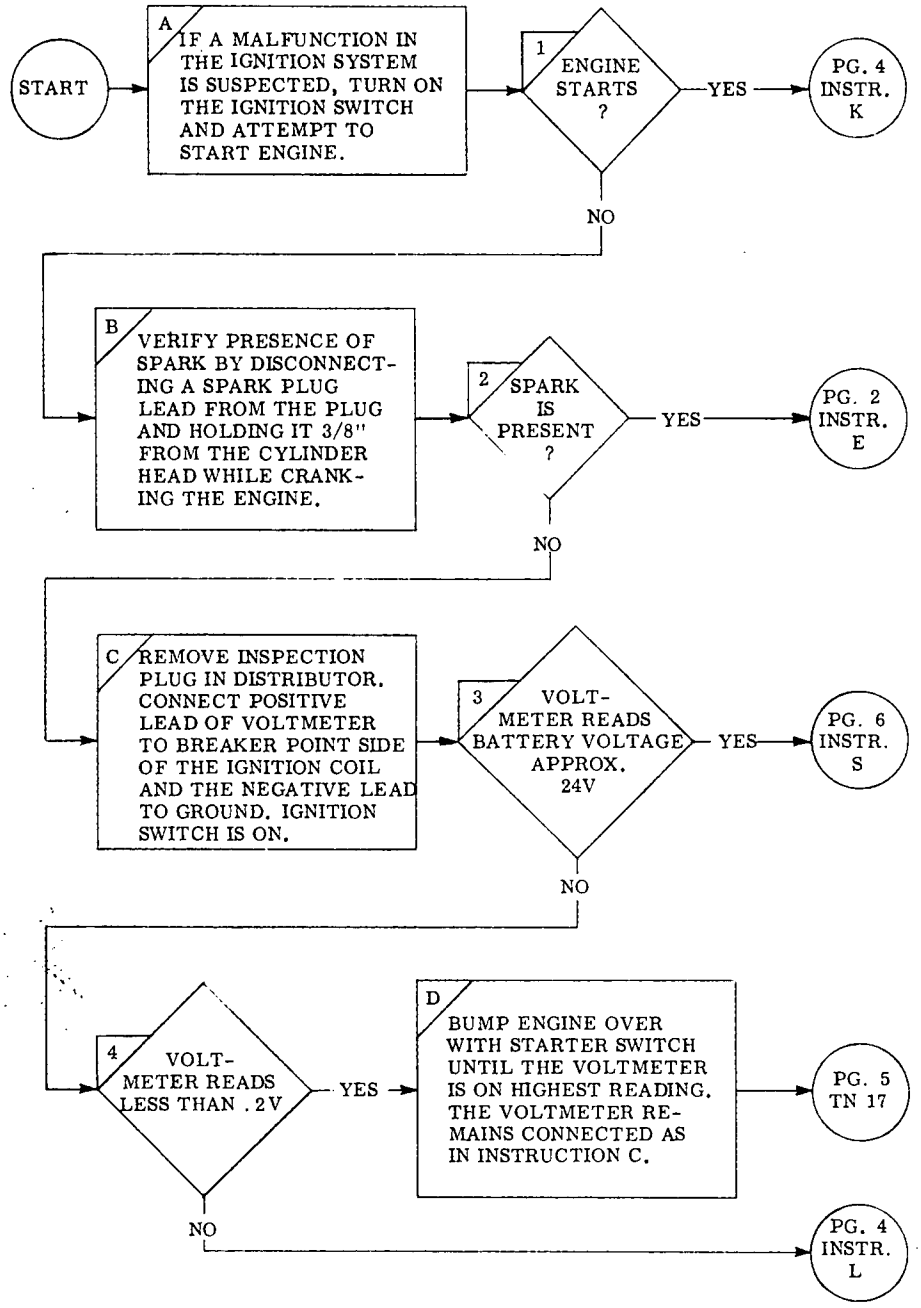


Figure C-2. Ignition Subsystem FAATE Chart (Page 1)

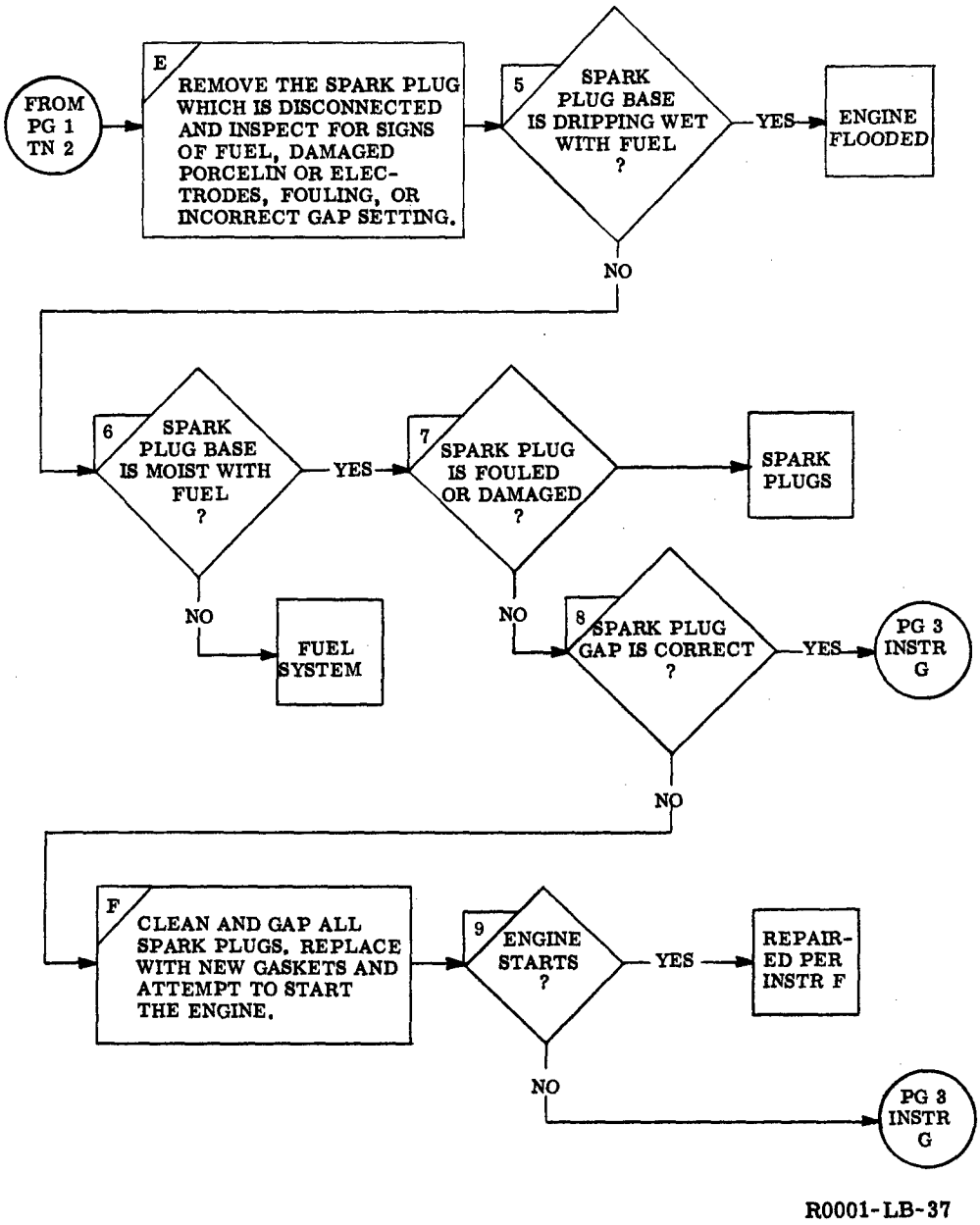


Figure C-2. Ignition Subsystem FAATE Chart (Page 2)

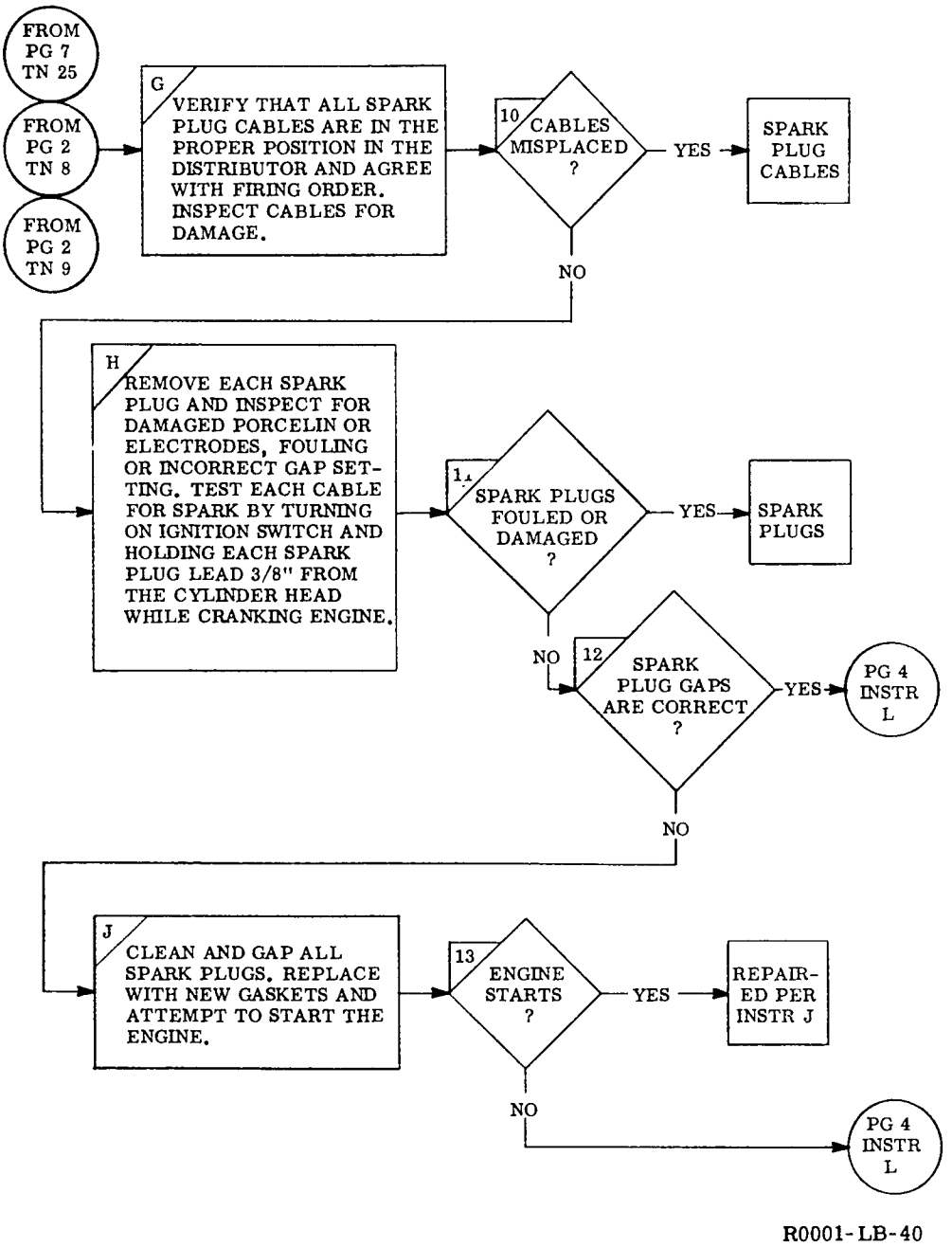


Figure C-2. Ignition Subsystem FAATE Chart (Page 3)

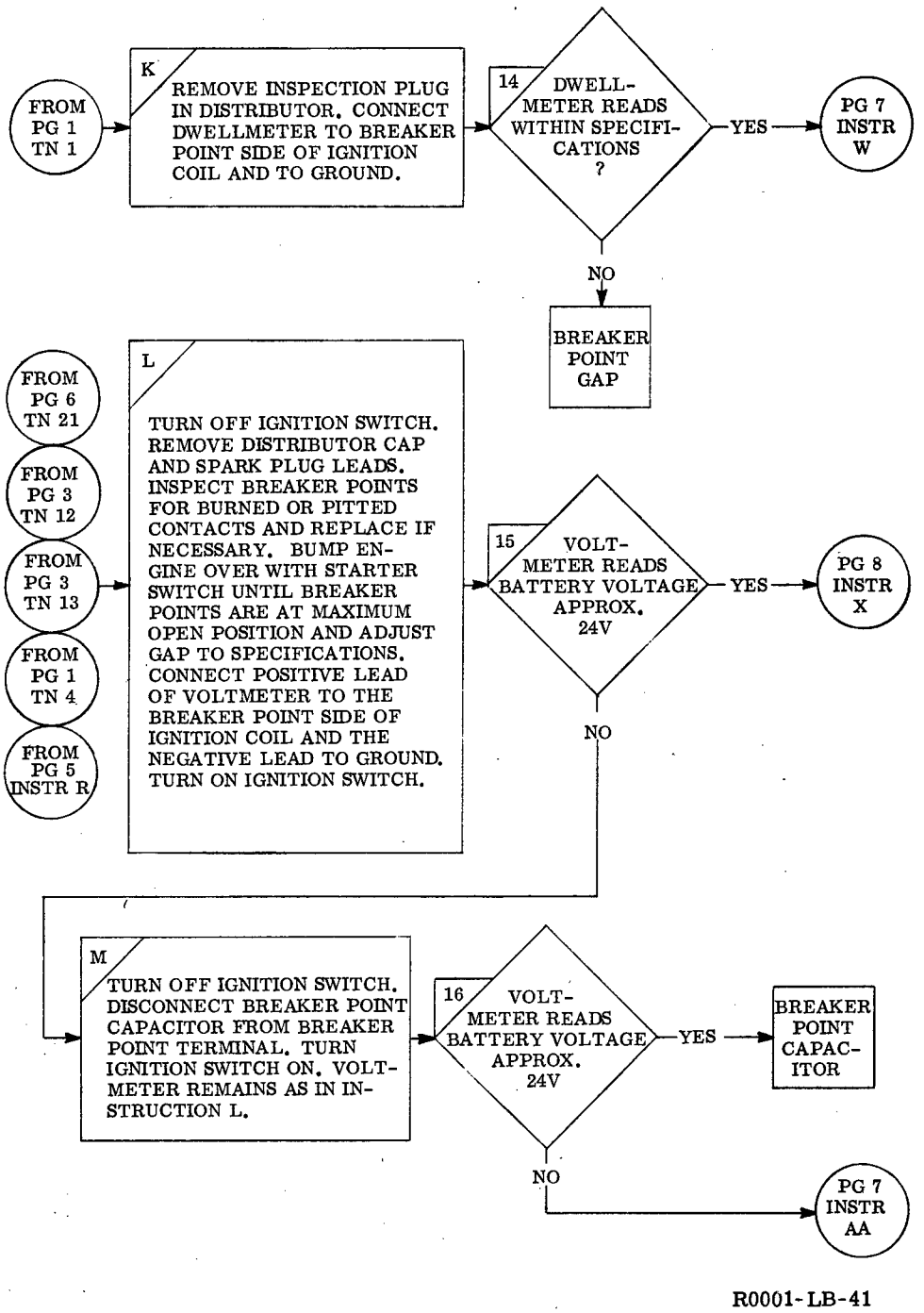


Figure C-2. Ignition Subsystem FAATE Chart (Page 4)

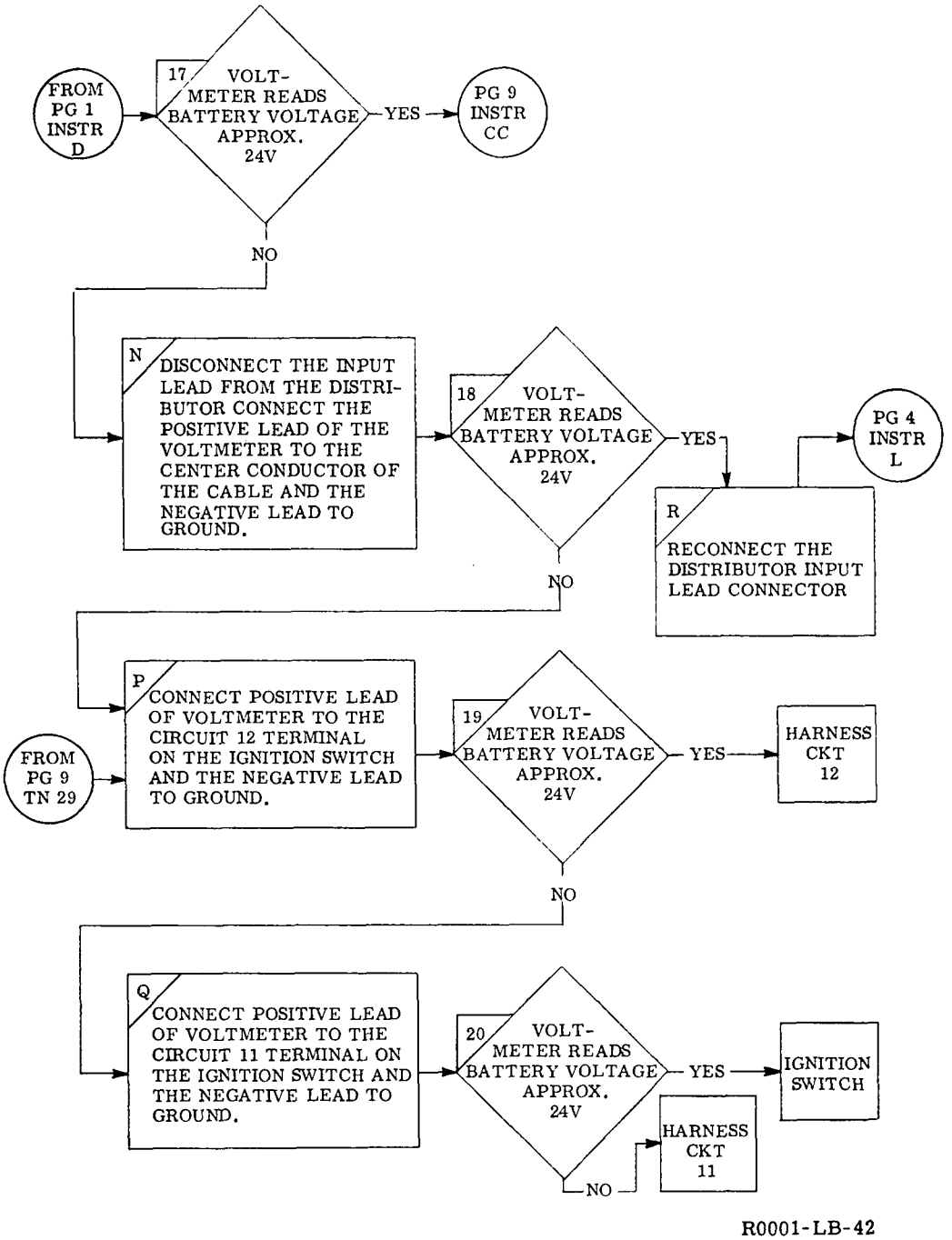


Figure C-2. Ignition Subsystem FAATE Chart (Page 5)

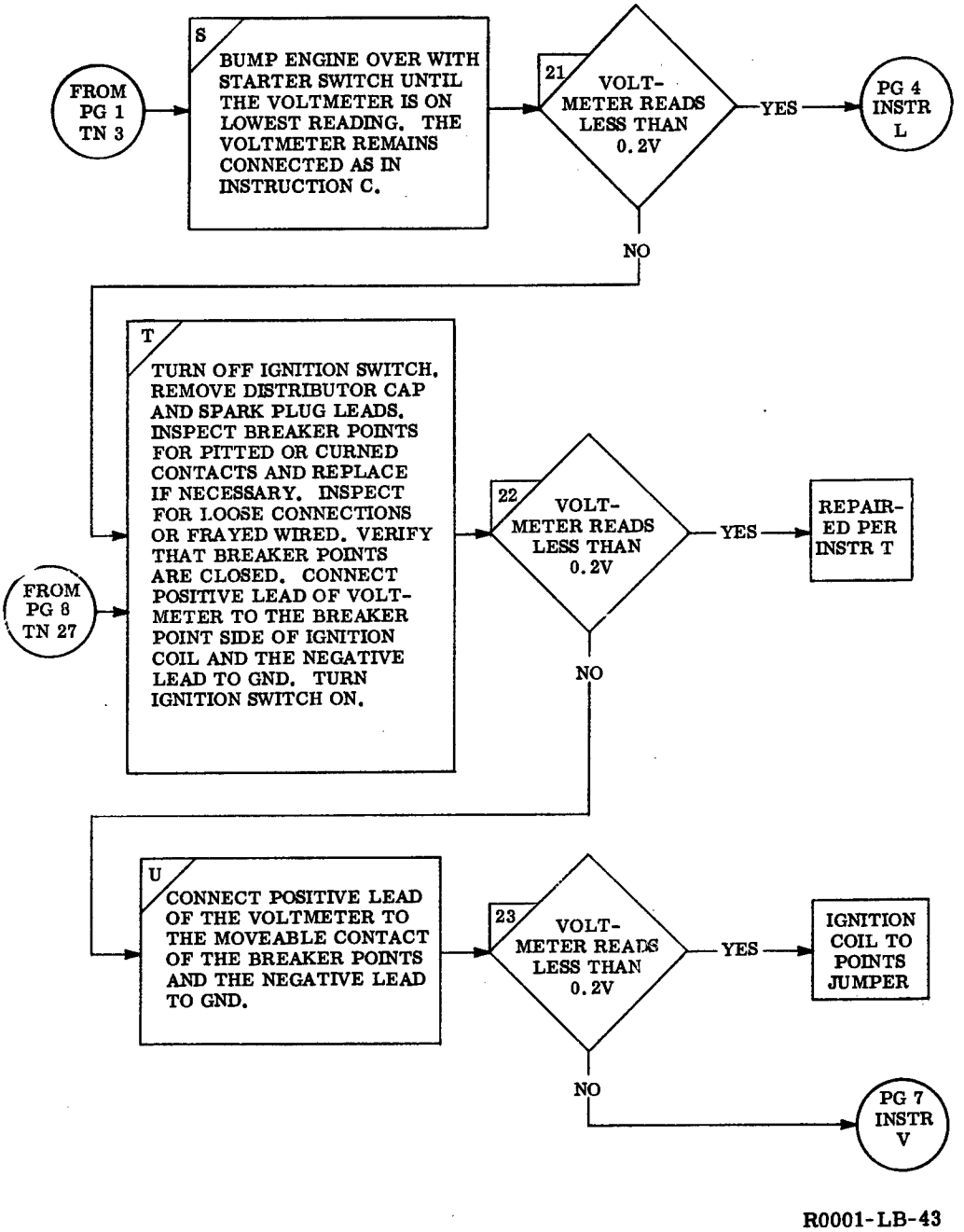


Figure C-2. Ignition Subsystem FAATE Chart (Page 6)

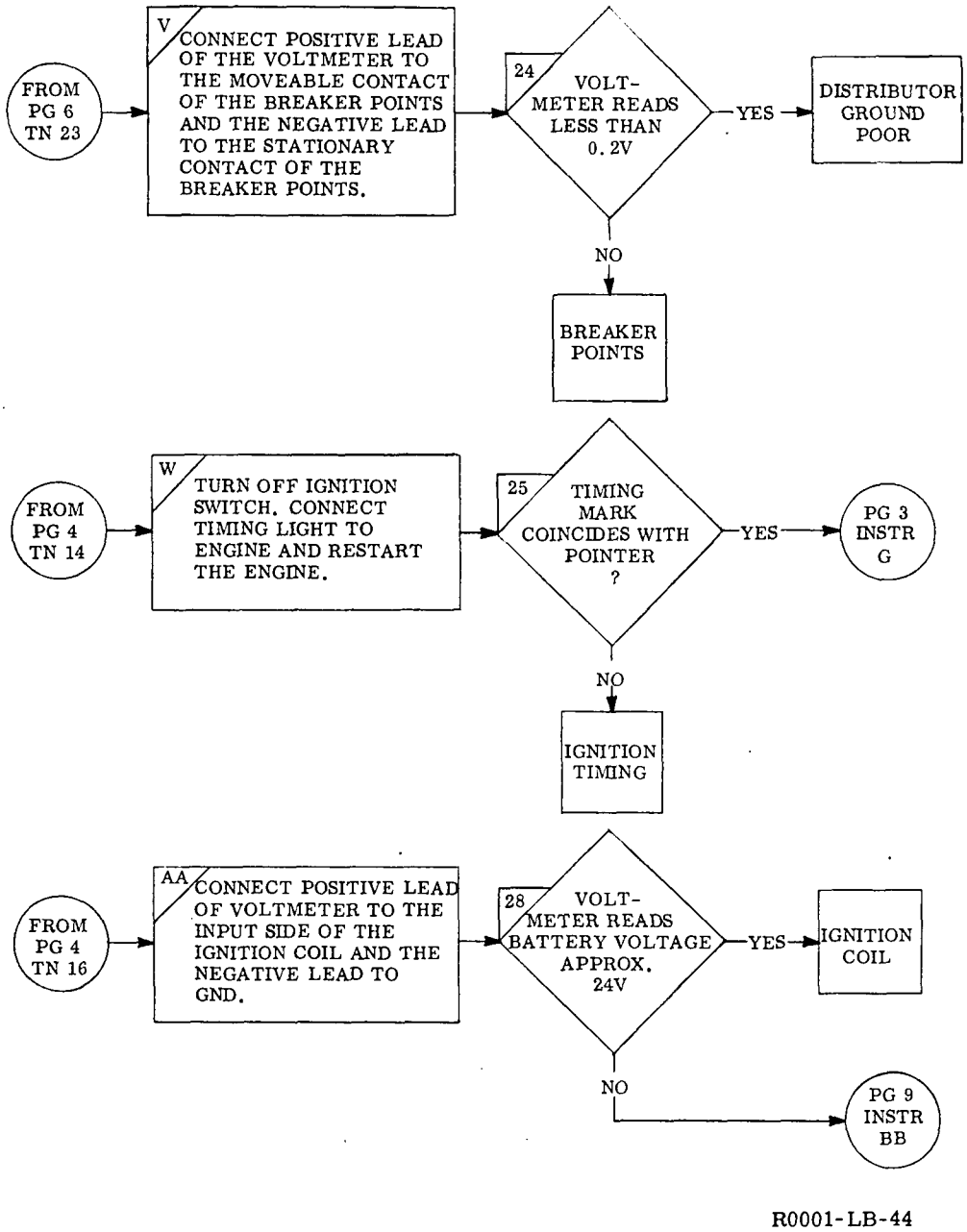


Figure C-2. Ignition Subsystem FAATE Chart (Page 7)

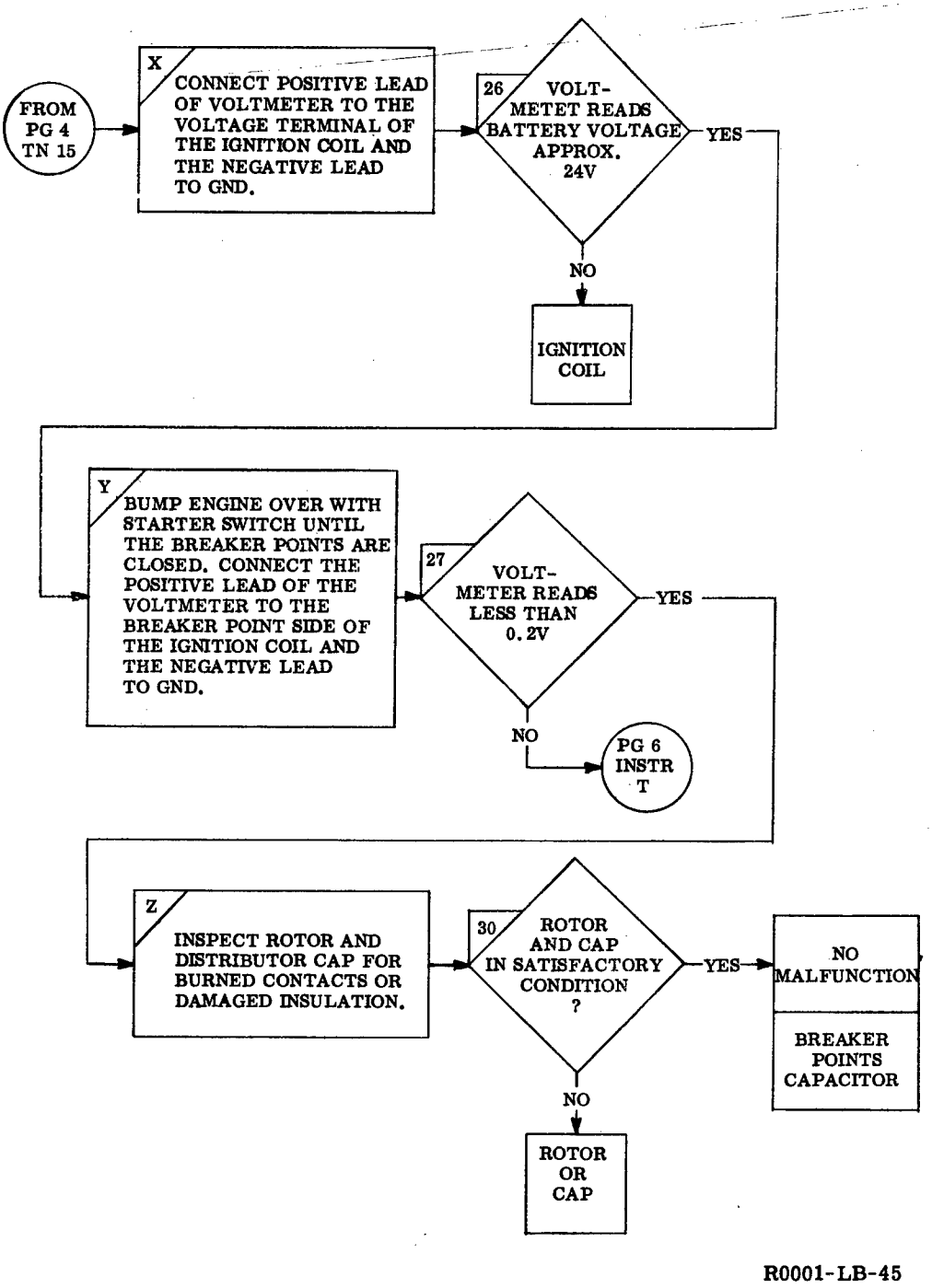


Figure C-2. Ignition Subsystem FAATE Chart (Page 8)

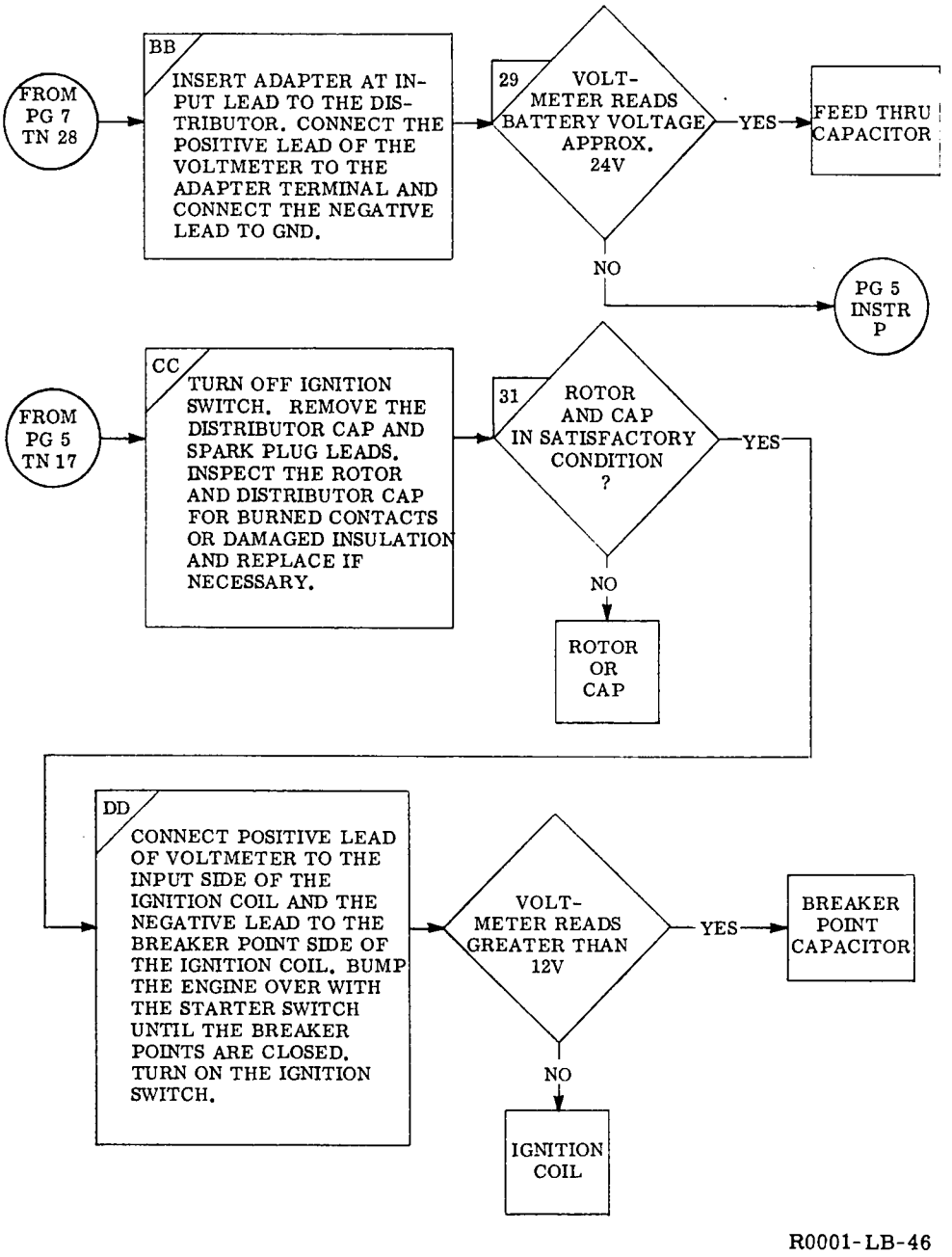


Figure C-2. Ignition Subsystem FAATE Chart (Page 9)

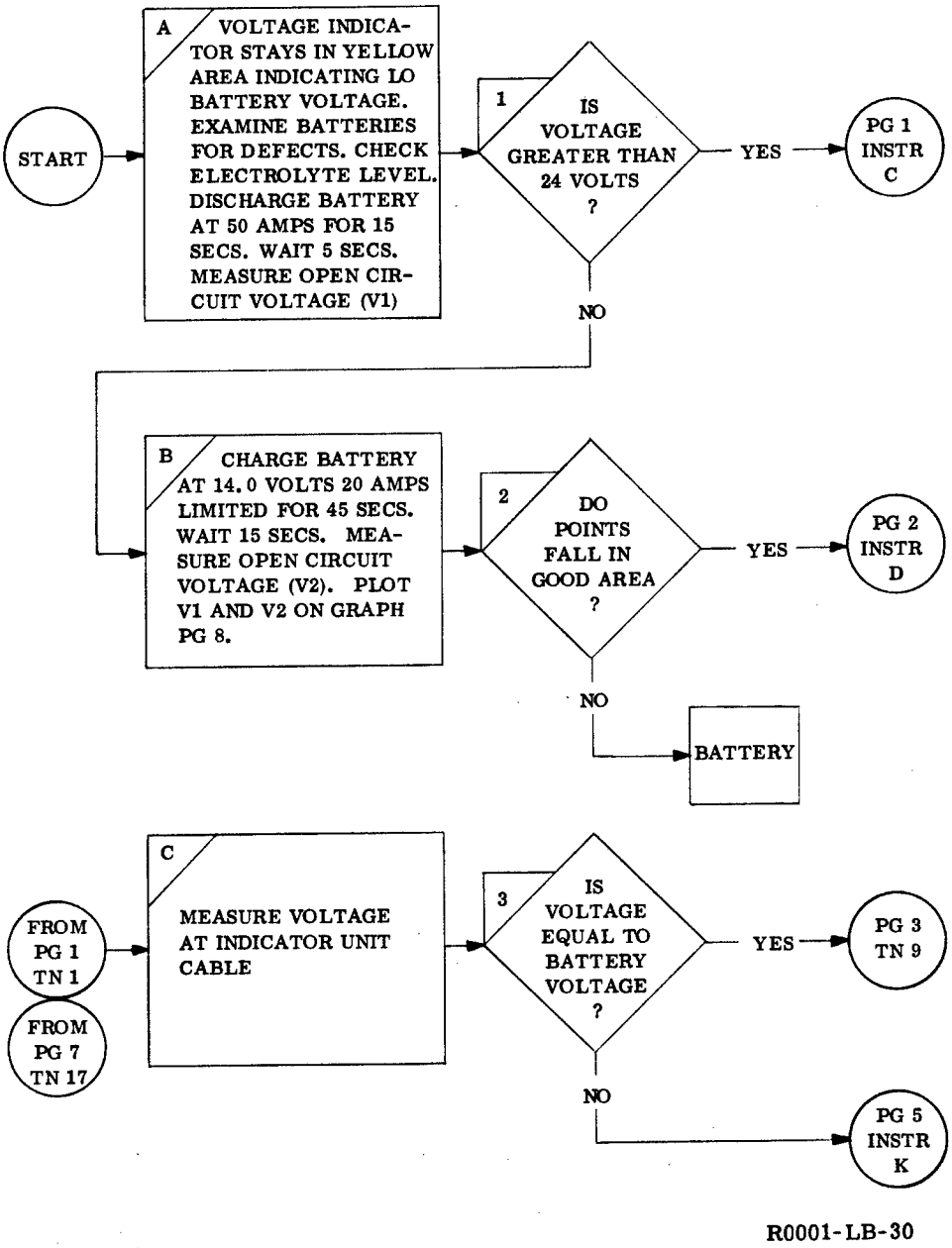


Figure C-3. Generator-Regulator Subsystems FAATE Chart, (Page 1)

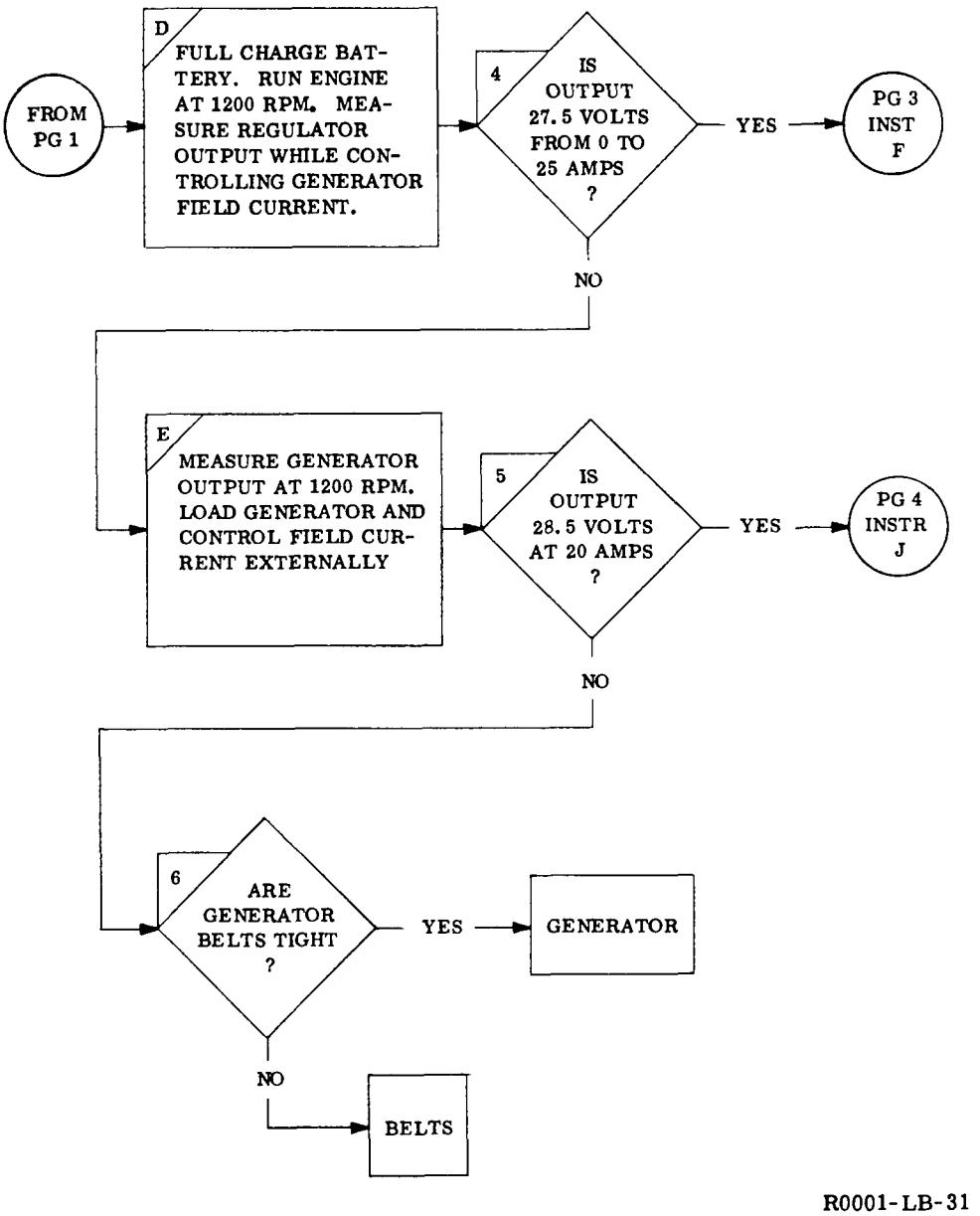


Figure C-3. Generator-Regualtor Subsystems FAATE Chart, (Page 2)

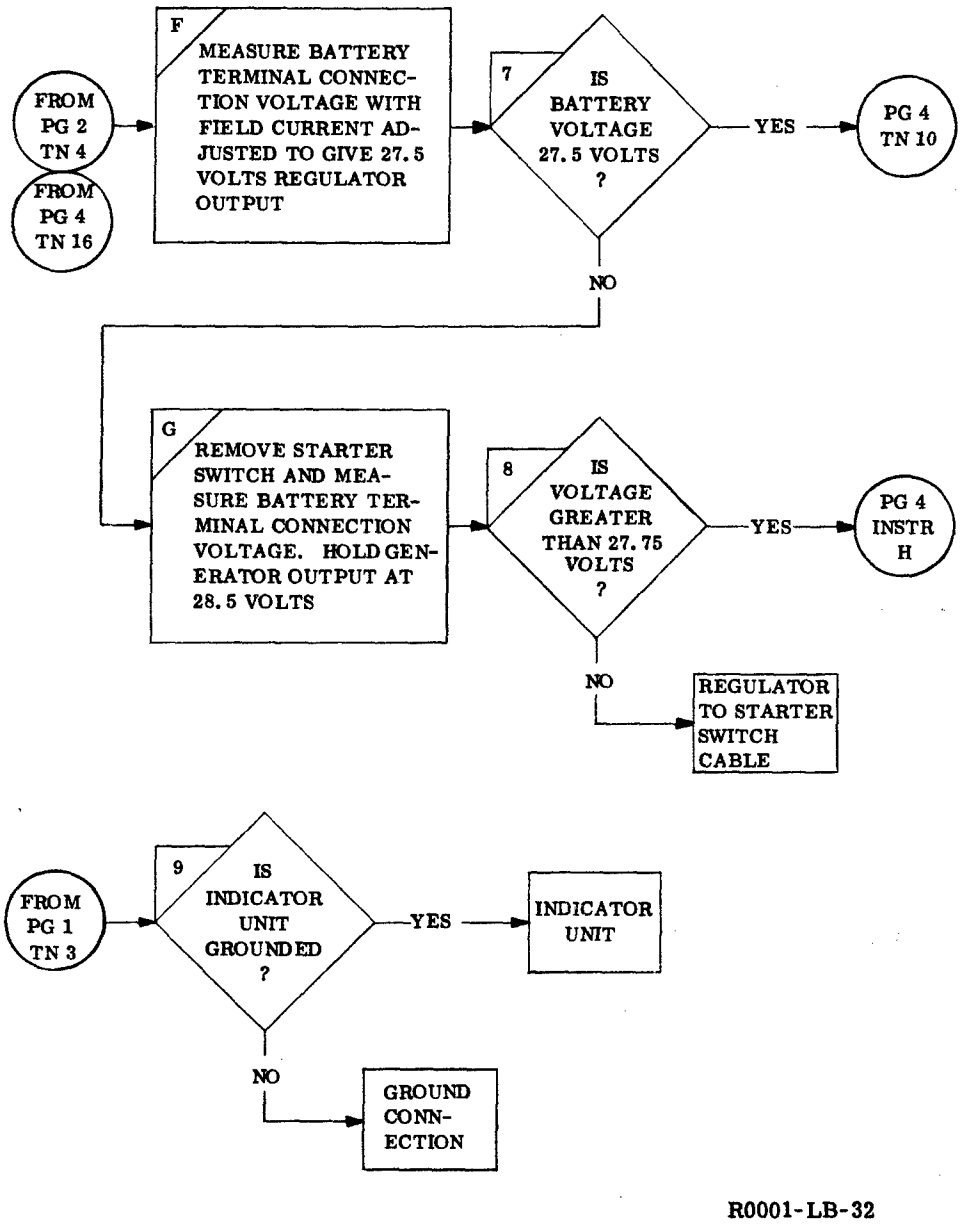


Figure C-3. Generator-Regulator Subsystems FAATE Chart, (Page 3)

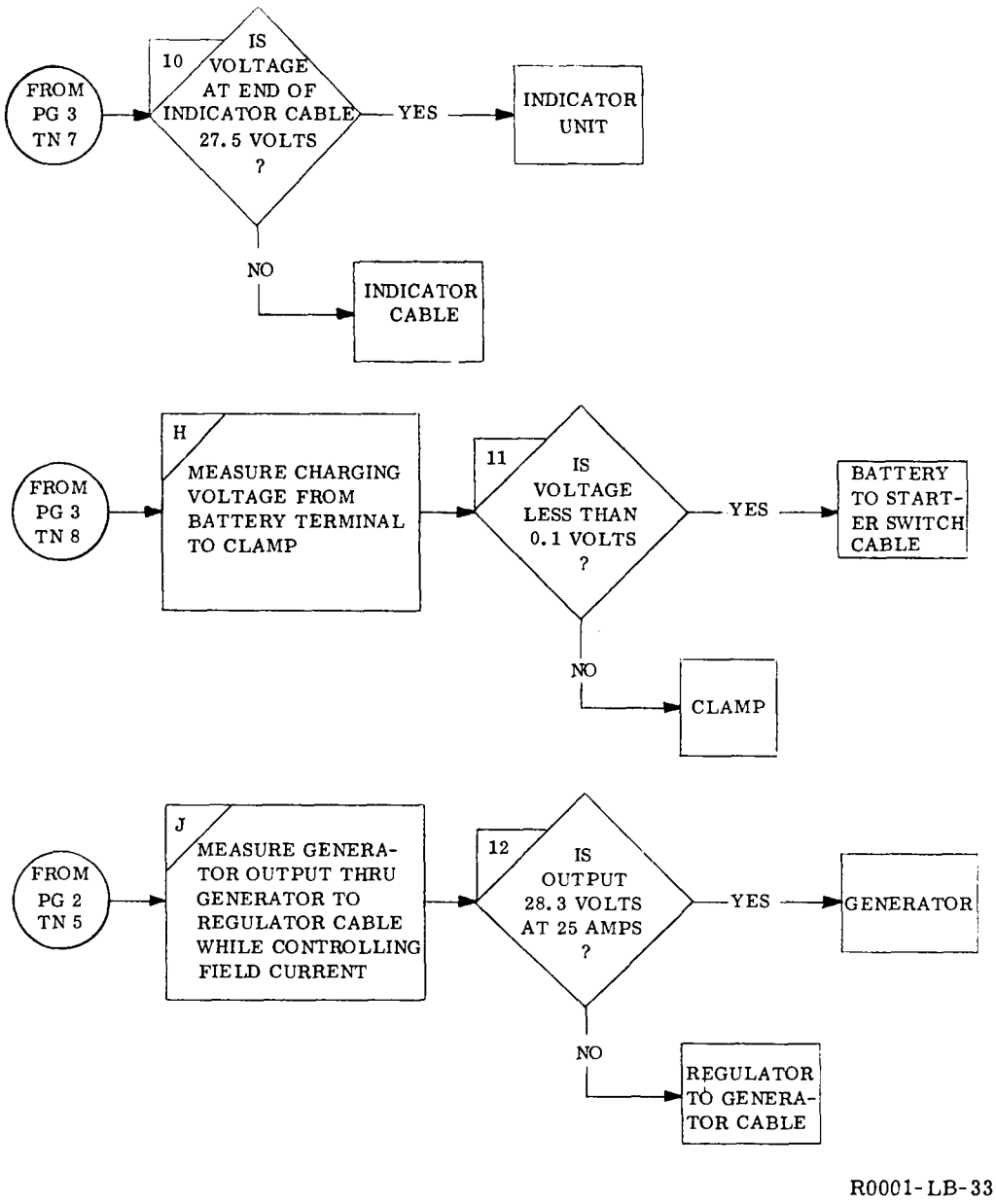


Figure C-3. Generator-Regulator Subsystems FAATE Chart, (Page 4)

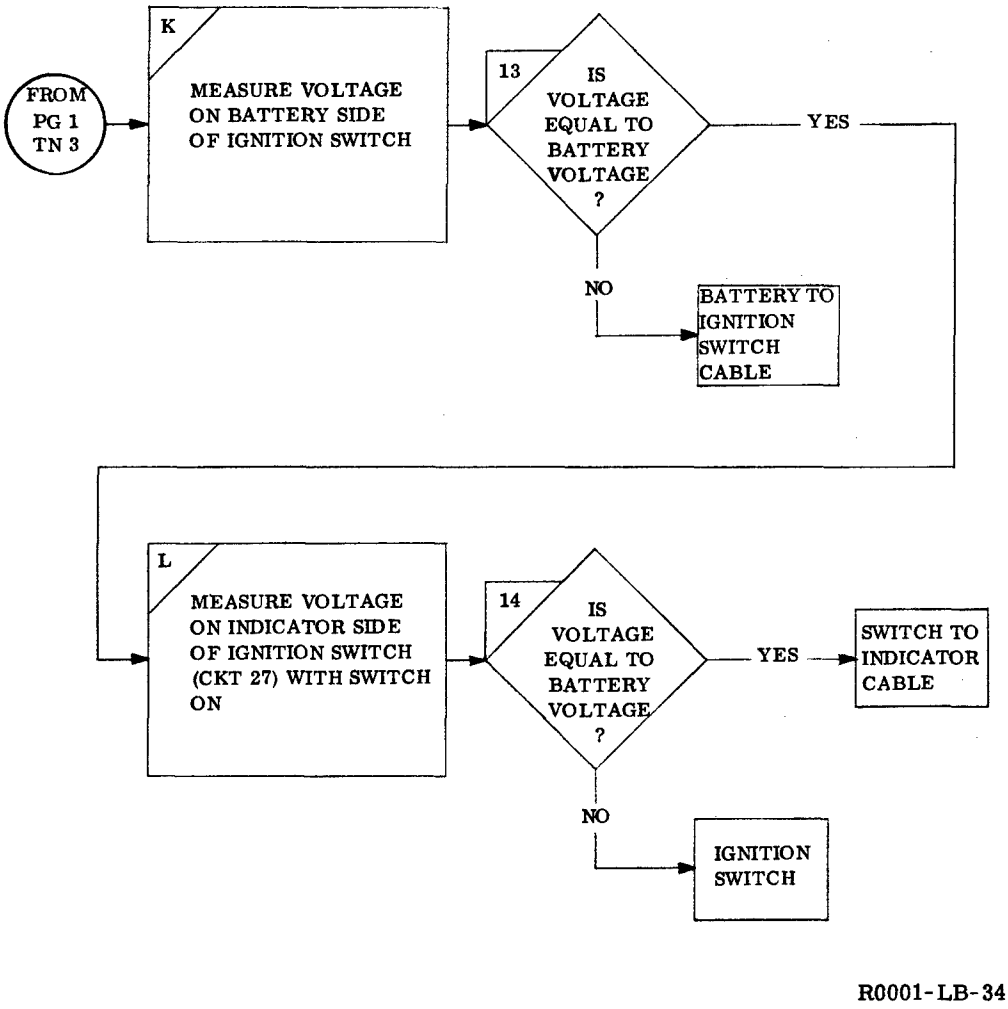


Figure C-3. Generator-Regulator Subsystems FAATE Chart, (Page 5)

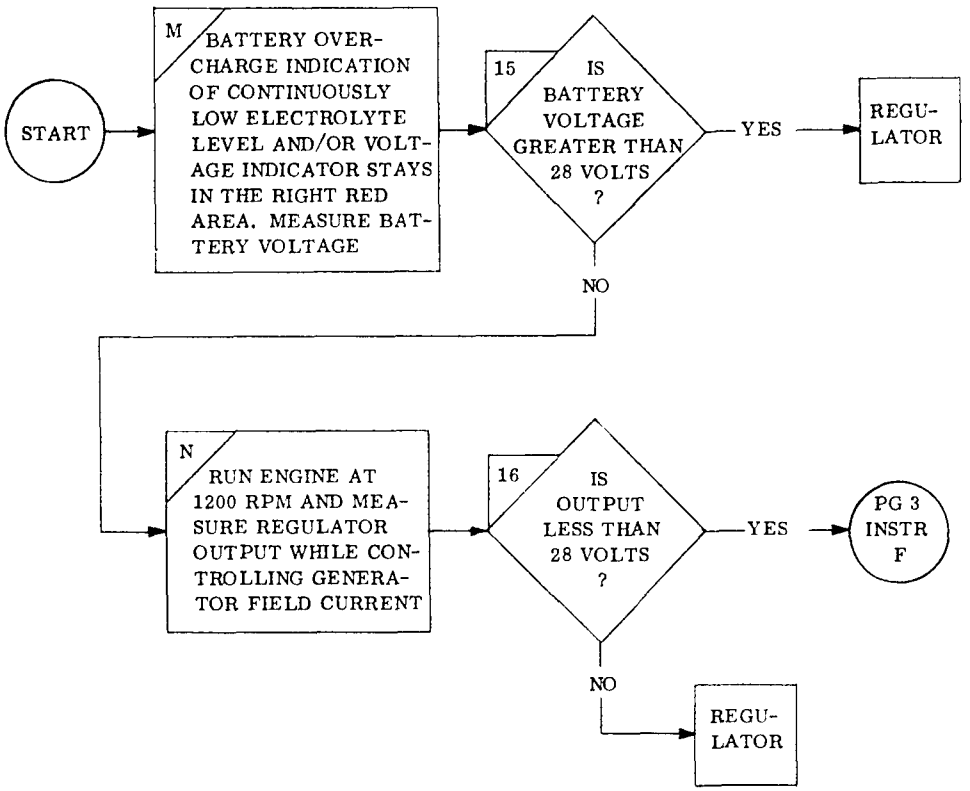


R0001-LB-35

Figure C-3. Generator-Regulator Subsystems FAATE Chart, (Page 6)

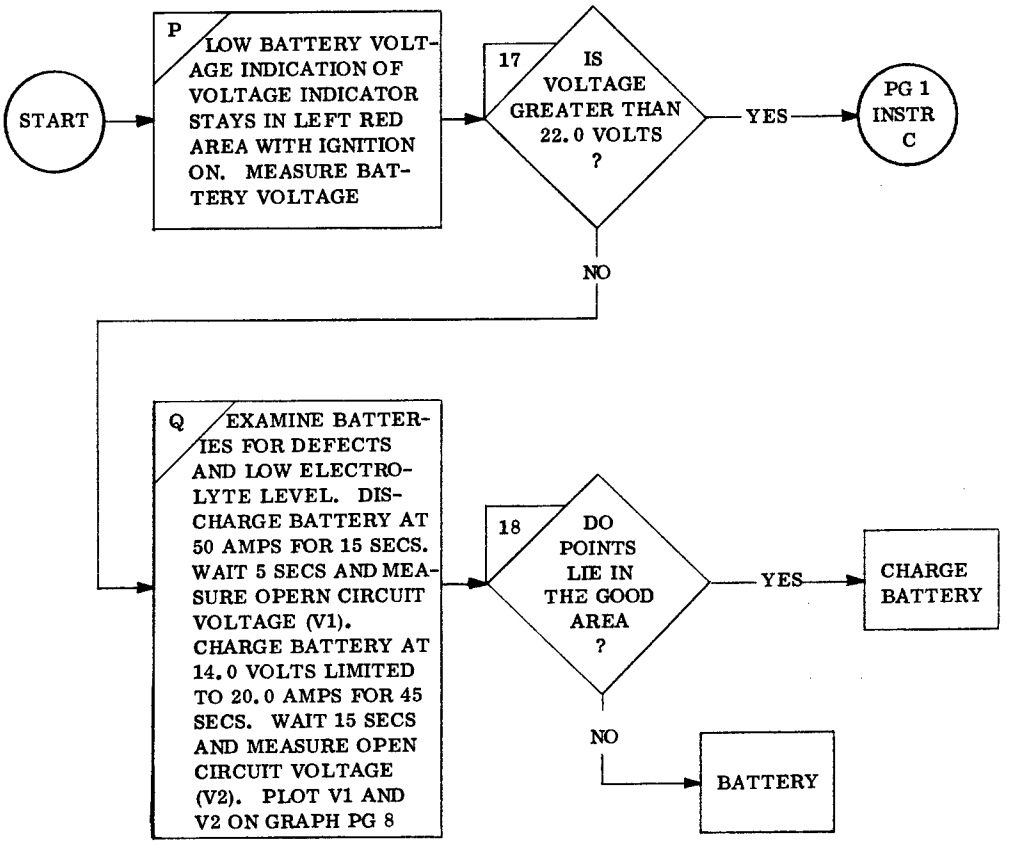


R0001-LB-36

Figure C-3. Generator-Regulator Subsystems FAATE Chart, (Page 7)

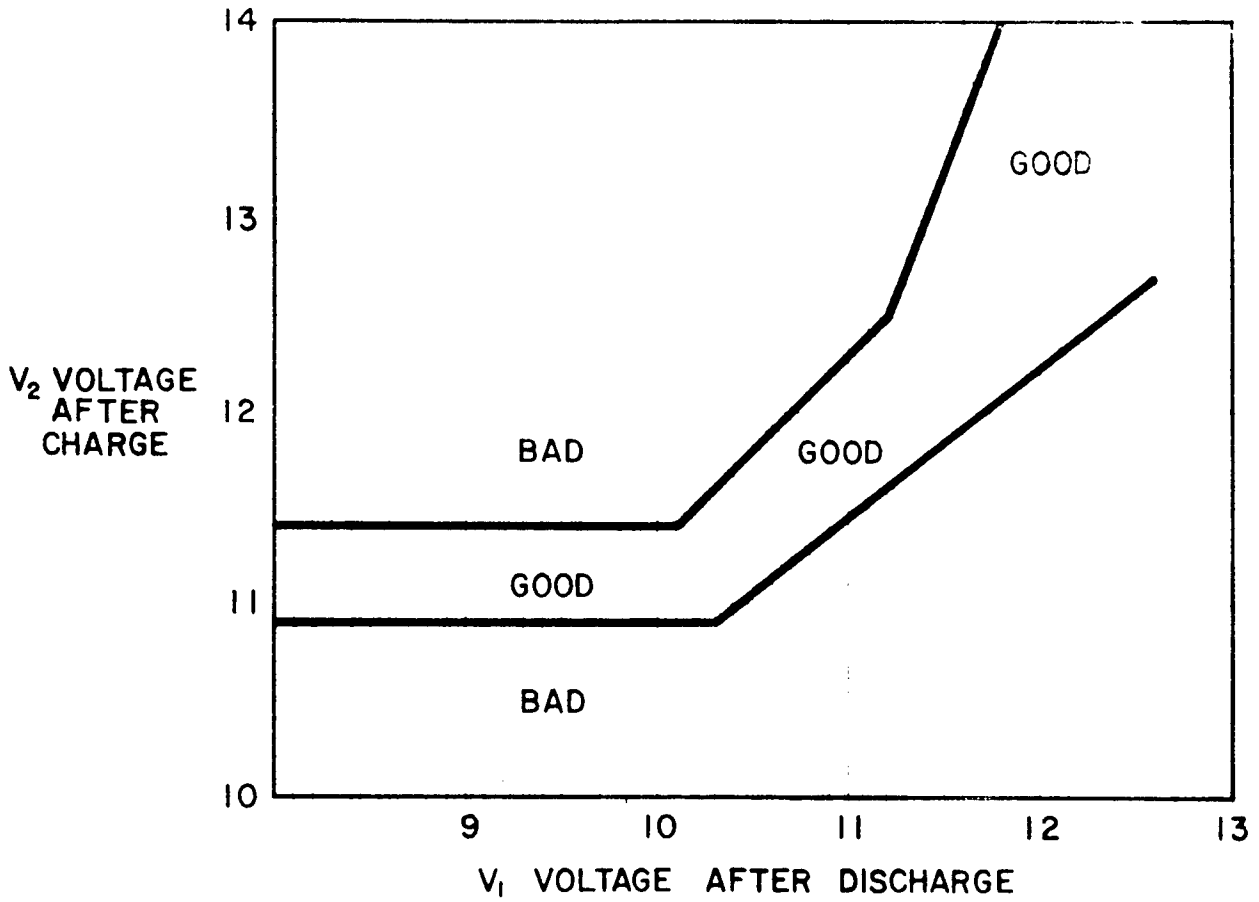


Figure C-3. Generator-Regulator Subsystems FAATE Chart, (Page 8)

# APPENDIX D
# COMPUTER-PROGRAMMED FAATE CHARTS

This appendix contains a computer program for diagnostics in the battery and starter subsystems. The program was generated directly from FAATE for these subsystems and is intended to show the direct application of FAATE to automatic test equipment. Examples of typical fault isolation to specific faults, follow the program.

In the examples, directions to the test operator are printed out and then a question mark printed to indicate that a test result must be entered. The test result is operated on by the program to determine the next operator direction. When the fault has been isolated by the program, the computer prints the fault identity. With this computer program, the operator performs only directed test actions and is not relied on to make decisions.

When FAATE is applied to a programmable automatic test system, the operator actions would be replaced by commands to measurement and stimuli devices to setup and initiate certain tests. The test results would then be directly entered into the computer via the measurement devices. The output of the computer would be either a command for action or the identity of the faulty component.

STARTER AND BATTERY SUBSYSTEMS FAATE
FAULT ISOLATION PROGRAM EXTENDED BASIC LANGUAGE

```
100 LET Q$ = "MEASURE CRANK"
110 LET R$ = "ING VØLTAGE -"
120 LET S$ = "FAULT ISØLATED-"
130 LET T$ = "     NEG BATT "
140 LET U$ = "     PØS BATT "
150 LET V$ = "PØS TERMINAL "
160 LET W$ = "NEG TERMINAL "
170 LET X$ = "     CLEAN ØR"
180 LET Y$ = "     REPLACE "
190 PRINT "SYMPTØM - "
200 PRINT
210 PRINT "ENGINE FAILS TØ CRANK ØR"
220 PRINT "FAILS TØ CRANK AT NØRMAL CRANKING SPEED"
230 PRINT
240 PRINT
250 PRINT Q$; R$
260 PRINT "     STARTER TERMINAL TØ STARTER CASE"
270 INPUT A
280 IF A < 18.5 THEN 590
290 PRINT
300 PRINT Q$; "ING CURRENT"
310 PRINT "     TØ STARTER"
320 INPUT B
330 IF B < 217 THEN 380
340 PRINT
350 PRINT S$
360 PRINT Y$; "STARTER"
370 GØ TØ 2310
380 PRINT
390 PRINT "CHECK ENGINE ØIL VISCØSITY"
400 INPUT C
410 IF C > 30 THEN 550
420 PRINT
430 PRINT "MEASURE TØRQUE -"
440 PRINT "     REQUIRED TØ TURN ENGINE"
450 INPUT D
460 IF D > 50 THEN 510
470 PRINT
480 PRINT S$
490 PRINT "     MECHANICAL ENGINE FAILURE"
500 GØ TØ 2310
510 PRINT
520 PRINT S$
530 PRINT Y$; "STARTER"
540 GØ TØ 2310
550 PRINT
560 PRINT S$
570 PRINT "     CHANGE TØ CØRRECT VISCØSITY ENGINE ØIL"
580 GØ TØ 2310
590 PRINT
600 PRINT Q$; R$
```

```
610 PRINT T$; V$; "TØ PØS BATT "; W$
620 INPUT E
630 IF E > 0.1 THEN 2080
640 PRINT
650 PRINT Q$; R$
660 PRINT U$; V$; "TØ CHASSIS"
670 INPUT F
680 IF F < 18.5 THEN 1370
690 PRINT
700 PRINT Q$; R$
710 PRINT U$; V$; "TØ STARTER TERMINAL"
720 INPUT G
730 IF G > 0.3 THEN 1040
740 PRINT
750 PRINT Q$; R$
760 PRINT T$; W$; "TØ CHASSIS"
770 INPUT H
780 IF H > 0.1 THEN 910
790 PRINT
800 PRINT "ARE STARTER MØUNT BØLTS TIGHT"
810 INPUT I$
820 IF I$ = "NØ" THEN 870
830 PRINT
840 PRINT S$
850 PRINT Y$; "STARTER"
860 GØ TØ 2310
870 PRINT
880 PRINT S$
890 PRINT "    TIGHTEN STARTER MØUNT BØLTS"
900 GØ TØ 2310
910 PRINT
920 PRINT Q$;R$
930 PRINT T$; W$; "TØ CLAMP"
940 INPUT J
950 IF J > 0.05 THEN 1000
960 PRINT
970 PRINT S$
980 PRINT Y$; "BATTERY TØ GRØUND CABLE"
990 GØ TØ 2310
1000 PRINT
1010 PRINT S$
1020 PRINT X$; Y$; T$; W$; "CLAMP"
1030 GØ TØ 2310
1040 PRINT
1050 PRINT Q$; R$
1060 PRINT U$; V$; "TØ CLAMP"
1070 INPUT K
1080 IF K > 0.05 THEN 1330
1090 PRINT
1100 PRINT  "REMØVE STARTER SWITCH ASSEMBLY FRØM FLØØR BØARD"
1110 PRINT
1120 PRINT Q$; R$
1130 PRINT "    STARTER SWITCH TERMINALS"
1140 INPUT L
```

```
1150 IF L > 0.1 THEN 1290
1160 PRINT
1170 PRINT Q$; R$
1180 PRINT "    STARTER SWITCH TO GROUND"
1190 INPUT M
1200 IF M < 18.5 THEN 1250
1210 PRINT
1220 PRINT S$
1230 PRINT Y$; "STARTER SWITCH TO STARTER CABLE"
1240 GO TO 2310
1250 PRINT
1260 PRINT S$
1270 PRINT Y4; "BATTERY TO STARTER SWITCH CABLE"
1280 GO TO 2310
1290 PRINT
1300 PRINT S$
1310 PRINT X$; Y$; "STARTER SWITCH"
1320 GO TO 2310
1330 PRINT
1340 PRINT S$
1350 PRINT X$; Y$; U$; V$; "CLAMP"
1360 GO TO 2310
1370 PRINT
1380 PRINT "INSPECT BATTERY CASE, COVERS, TERMINAL POSTS"
1390 PRINT "CHECK FOR LEAKS AND ELECTROLYTIC LEVEL"
1400 PRINT
1410 PRINT "    BATTERY DEFFECTIVE (YES OR NO)"
1420 INPUT N$
1430 IF N$ = "NØ" THEN 1480
1440 PRINT
1450 PRINT S$
1460 PRINT "    REPLACE BATTERY"
1470 GO TO 2310
1480 PRINT
1490 PRINT "DISCHARGE BATTERY -"
1500 PRINT "    AT 50 AMPS FOR 15 SECONDS"
1510 PRINT
1520 PRINT "WAIT 5 SECONDS -"
1530 PRINT "    MEASURE OPEN CIRCUIT VOLTAGE"
1540 INPUT V1
1550 PRINT
1560 PRINT "CHARGE BATTERY -"
1570 PRINT "    AT 14.0 VOLTS (20 AMPS LIMITED) FOR 45 SECONDS"
1580 PRINT
1590 PRINT "WAIT 15 SECONDS -"
1600 PRINT "    MEASURE OPEN CIRCUIT VOLTAGE"
1610 INPUT V2
1620 IF V1 < 8.0 THEN 1780
1630 IF V1 > 10.1 THEN 1670
1640 IF V2 < 10.9 THEN 1780
1650 IF V2 > 11.4  THEN 1780
1660 GO TO 1820
1670 IF V1 > 10.3 THEN 1710
```

```
1680 IF V2 < 10.9 THEN 1780
1690 IF V2 > (V1 + 1.3) THEN 1780
1700 GO TO 1820
1710 IF V1 > 11.2 THEN 1750
1720 IF V2 < (V1 + 1.3) THEN 1780
1730 IF V2 > (.78*V1 + 2.9) THEN 1780
1740 GO TO 1820
1750 IF V2 < (.78*V1 + 2.9) THEN 1780
1760 IF V2 > (2.5*V1 - 15.5) THEN 1780
1770 GO TO 1820
1780 PRINT
1790 PRINT S$
1800 PRINT "    REPLACE BATTERY"
1810 GO TO 2310
1820 IF V2 < 11.9 THEN 2000
1830 IF V2 < 12.1 THEN 1980
1840 IF V2 < 12.3 THEN 1960
1850 IF V2 < 12.5 THEN 1940
1860 IF V2 < 12.7 THEN 1920
1870 IF V2 < 12.9 THEN 1900
1880 LET V3 = 2
1890 GO TO 2010
1900 LET V3 = 3
1910 GO TO 2010
1920 LET V3 = 4
1930 GO TO 2010
1940 LET V3 = 5
1950 GO TO 2010
1960 LET V3 = 6
1970 GO TO 2010
1980 LET V3 = 7
1990 GO TO 2010
2000 LET V3 = 8
2010 PRINT
2020 PRINT S$
2030 PRINT "    DISCHARGED BATTERY"
2040 PRINT
2050 PRINT "    RECHARGE FOR "; V3; " HOURS"
2060 PRINT "    AT 14 VOLTS (15 AMPS LIMITED) "
2070 GO TO 2310
2080 PRINT
2090 PRINT Q$; R$
2100 PRINT T$; V$; "TO CLAMP"
2110 INPUT O
2120 IF O > 0.05 THEN 2270
2130 PRINT
2140 PRINT Q$; R$
2150 PRINT U$; W$; "TO CLAMP"
2160 INPUT P
2170 IF P > 0.05 THEN 2230
2180 PRINT
2190 PRINT S$
2200 PRINT Y$; "BATTERY TO BATTERY CABLE"
2210 GO TO 2310
```

```
2220
2230 PRINT
2240 PRINT S$
2250 PRINT X$; Y$; U$; W$; "CLAMP"
2260 GO TO 2310
2270 PRINT
2280 PRINT S$
2290 PRINT X$; Y$; T$; V$; "CLAMP"
2300
2310 PRINT
2320 PRINT " TEST COMPLETE"
2330 END
```

SAMPLE ISOLATION OF DEFECTIVE BATTERY
(will not hold charge)

```
SYMPTØM -

ENGINE FAILS TØ CRANK ØR
FAILS TØ CRANK AT NØRMAL CRANKING SPEED


MEASURE CRANKING VØLTAGE -
    STARTER TERMINAL TØ STARTER CASE
 ? 18.0

MEASURE CRANKING VØLTAGE -
    NEG BATT PØS TERMINAL TØ PØS BATT NEG TERMINAL
 ? 0

MEASURE CRANKING VØLTAGE -
    PØS BATT PØS TERMINAL TØ CHASSIS
 ? 18.0

INSPECT BATTERY CASE, CØVERS, TERMINAL PØSTS
CHECK FØR LEAKS AND ELECTRØLYTIC LEVEL

    BATTERY DEFFECTIVE (YES ØR NØ)
 ? NØ

DISCHARGE BATTERY -
    AT 50 AMPS FØR 15 SECØNDS

WAIT 5 SECØNDS -
    MEASURE ØPEN CIRCUIT VØLTAGE
 ? 11.2

CHARGE BATTERY -
    AT 14.0 VØLTS (20 AMPS LIMITED) FØR 45 SECØNDS

WAIT 15 SECØNDS -
    MEASURE ØPEN CIRCUIT VØLTAGE
 ? 11.5

FAULT ISØLATED-
    REPLACE BATTERY

 TEST CØMPLETE
```

SAMPLE ISOLATION OF DISCHARGED BATTERY

```
SYMPTØM -

ENGINE FAILS TØ CRANK ØR
FAILS TØ CRANK AT NØRMAL CRANKING SPEED


MEASURE CRANKING VØLTAGE -
    STARTER TERMINAL TØ STARTER CASE
 ? 18.0

MEASURE CRANKING VØLTAGE -
    NEG BATT PØS TERMINAL TØ PØS BATT NEG TERMINAL
 ? 0

MEASURE CRANKING VØLTAGE -
    PØS BATT PØS TERMINAL TØ CHASSIS
 ? 10.0

INSPECT BATTERY CASE, CØVERS, TERMINAL PØSTS
CHECK FØR LEAKS AND ELECTRØLYTIC LEVEL

    BATTERY DEFFECTIVE (YES ØR NØ)
 ? NØ

DISCHARGE BATTERY -
    AT 50 AMPS FØR 15 SECØNDS

WAIT 5 SECØNDS -
    MEASURE ØPEN CIRCUIT VØLTAGE
 ? 8.5

CHARGE BATTERY -
    AT 14.0 VØLTS (20 AMPS LIMITED) FØR 45 SECØNDS

WAIT 15 SECØNDS -
    MEASURE ØPEN CIRCUIT VØLTAGE
 ? 11.2

FAULT ISØLATED-
    DISCHARGED BATTERY

    RECHARGE FØR  8  HØURS
    AT 14 VØLTS (15 AMPS LIMITED)

 TEST CØMPLETE
```

SAMPLE ISOLATION OF BATTERY TERMINAL CLAMP

```
SYMPTØM -

ENGINE FAILS TØ CRANK ØR
FAILS TØ CRANK AT NØRMAL CRANKING SPEED


MEASURE CRANKING VØLTAGE -
    STARTER TERMINAL TØ STARTER CASE
 ? 18.0

MEASURE CRANKING VØLTAGE -
    NEG BATT PØS TERMINAL TØ PØS BATT NEG TERMINAL
 ? .6

MEASURE CRANKING VØLTAGE -
    NEG BATT PØS TERMINAL TØ CLAMP
 ? 0

MEASURE CRANKING VØLTAGE -
    PØS BATT NEG TERMINAL TØ CLAMP
 ? .5

FAULT ISØLATED-
    CLEAN ØR    REPLACE     PØS BATT NEG TERMINAL CLAMP

 TEST CØMPLETE
```

SAMPLE ISOLATION OF STARTER SWITCH
(High Resistance Contacts)

```
SYMPTØM -

ENGINE FAILS TØ CRANK ØR
FAILS TØ CRANK AT NØRMAL CRANKING SPEED


MEASURE CRANKING VØLTAGE -
    STARTER TERMINAL TØ STARTER CASE
 ? 18.0

MEASURE CRANKING VØLTAGE -
    NEG BATT PØS TERMINAL TØ PØS BATT NEG TERMINAL
 ? 0

MEASURE CRANKING VØLTAGE -
    PØS BATT PØS TERMINAL TØ CHASSIS
 ? 22.0

MEASURE CRANKING VØLTAGE -
    PØS BATT PØS TERMINAL TØ STARTER TERMINAL
 ? 1.1

MEASURE CRANKING VØLTAGE -
    PØS BATT PØS TERMINAL TØ CLAMP
 ? 0

REMØVE STARTER SWITCH ASSEMBLY FRØM FLØØR BØARD

MEASURE CRANKING VØLTAGE -
    STARTER SWITCH TERMINALS
 ? 1.0

FAULT ISØLATED-
    CLEAN ØR    REPLACE STARTER SWITCH

 TEST CØMPLETE
```

SAMPLE ISOLATION OF STARTER

```
SYMPTOM -

ENGINE FAILS TO CRANK OR
FAILS TO CRANK AT NORMAL CRANKING SPEED


MEASURE CRANKING VOLTAGE -
    STARTER TERMINAL TO STARTER CASE
 ? 22.0

MEASURE CRANKING CURRENT
    TO STARTER
 ? 65

CHECK ENGINE OIL VISCOSITY
 ? 20

MEASURE TORQUE -
    REQUIRED TO TURN ENGINE
 ? 35

FAULT ISOLATED-.
    REPLACE STARTER

 TEST COMPLETE
```

# APPENDIX E
# SAMPLES OF FAULT ISOLATION

In this appendix, two samples of fault isolation are performed:

1. Indication - vehicle operator complains of battery(s) continually needing to be recharged.

   Fault - low generator output due to shorted windings.

2. Indication - vehicle operator complains of engine missing under load.

   Fault - low resistance (0.25M shunt) spark plug (No. 2) due to fouling.

## E-I. DISCHARGED BATTERIES

Assuming other vehicle subsystems operate properly (no ignition or fuel problems), first the Battery Subsystem test would be performed. This test is done to make sure the fault is not a defective battery. Fault isolation in this subsystem will indicate one or two discharged batteries.

To determine the cause of the discharged batteries, the Starter Subsystem (excessive current draw in starting) and the Generator-Regulator Subsystem (sufficient output to charge batteries) tests are performed.

In the Starter Subsystem test, a "GO" condition will result. Cranking voltage drop across the starter to battery circuit, engine cranking rpm, and starter cranking current will all be nominal.

The test flow in the Generator-Regulator Subsystem (figure E-1) will first indicate low full load voltage output from the regulator. Next, when the generator is checked for adequate open circuit, field shorted to output, output voltage, a low output voltage will be measured. This low output completes fault isolation to a defective generator.

## E-II. FOULED PLUG

Assuming other vehicle subsystems operate properly (no starting or battery related problems or fuel problems), the Ignition Subsystem test would be performed.

The test flow in this subsystem is indicated in figure E-2. The first operator action - "Crank Engine, Ignition OFF" - provides an input to check the breaker points capacitor. " Operator action - Crank Engine, Ignition Switch ON" - provides inputs to check: 1) dwell angle; 2) breaker point voltage drop; 3) distributor inpur current-points closed; 4) distributor input voltage; 5) breaker points dc voltage; and 6) distributor input current - points open. All these measurements, including the breaker point capacitor, will fall within acceptable limits.

The engine will start. The next operator action will be - 'Run Engine, 450 rpm. A cylinder balance test is performed on each cylinder. All cylinders except No. 2 will be good. This condition will direct the flow to inserting an adapter in series with the No. 2 spark plug. A high voltage test will indicate an acceptable or low high voltage output. Either output will enable fault isolation to the correct component.

Under no-load condition, the high voltage output is more likely to be good; this condition when combined with the cylinder balance test result will indicate a faulty No. 2 spark plug.

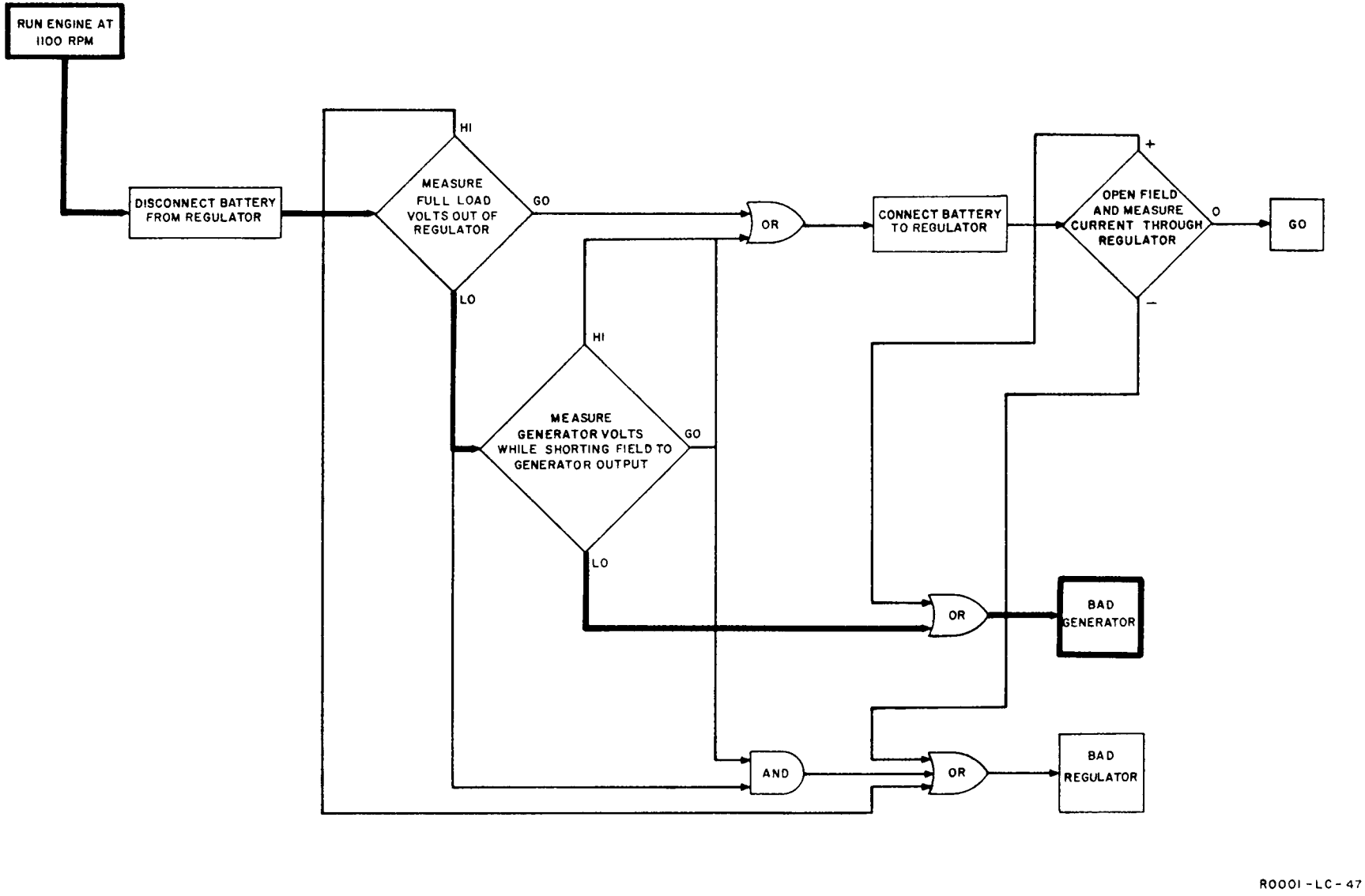


Figure E-1. Fault Isolation Test Flow Diagram of Generator-Regulator Subsystem, Sample 1

# APPENDIX G
# SELECTED BIBLIOGRAPHY

The sources cited here are representative reference works indicative of the more than two years of research effort by Westinghouse PSED Engineering preceding and during the study program. Alphabetical arrangement has no relationship to either chronology or importance.

1. Allen UTI
Division of Allen Electric and Equipment Co.
Kalamazoo Operation
2101 N. Pitcher St.
Kalamazoo, Mich. 49007

2. Amstro Corporation
122 Clinton Road
Fairfield, New Jersey 07006

3. Associated Equipment Corporation
1541 Salzman Avenue
St. Louis, Missouri

4. Audels Domestic Compact Auto Repair Manual
Edwin P. Anderson
Copyright, 1963, by Howard W. Sams & Co., Indianapolis, Ind.

5. Automatic Diagnostic of Engine Ailments
Phil Hirsch
Electronics Magazine May 2, 1966

6. Automotive Electrical Equipment
William H. Crouse
Sixth Edition
Copyright, 1966, by McGraw-Hill, Inc.

7. Automatic Inspection and Diagnostic System for Army Tactical Vehicles
Albert Chaflin, George R. Staton
US Army, Frankford Arsenal, Phila, Pa.
IEEE Transactions on Aerospace and Electronic Systems
Vol AES 2 No 3 May 1966

8. Automotive Mechanics Principles and Operation
Mervin J. McGuffin
Copyright, 1962, Canada
MacMillan Company of Canada, Ltd.

9. The Automobile Electrical System
Randolph R. Barr and Thomas D. Flocco
First Edition
Copyright, 1960, by R.R. Barr & T.D. Flocco

10. Automatic Switch Co
Hanover Road
Florham Park
New Jersey 07932

11. Audit - Automated Diagnostic Testing
Research Report
Long Range Planning Service
Stantord Research Institute
Menlo Park, California

12. Application Notes for Current Transducers
Pearson Electronics, Inc.
4007 Transport Street
Palo Alto, California 94303

13. The Acoustic Analyzer as a Diagnostic Tool for Turbine Engines
Jil, Frarey and C. J. Zabriskic
Curtis - Wright Corporation

14. Battery and Electrical System Tester
Main Warehouse
Fox Products Company
4720 North 18th St.
Phila Pa. 19141

15. Battery Manufacturing Company, Inc.
14654 Dequindre
Detroit, Michigan

16. BLH Electronics, Inc.
Waltham, Mass. 02154

17. Car Repair 1965
Science & Mechanics Publishing Company

18. Cox Instrument
Division of Lynch Corporation
15300 Fullerton Ave.
Detroit, Michigan 48227

19. Current Probe Model 3892
Test Instruments Division
Annapolis Operation
Box 391
Annapolis Md. 21404

20. Current Probes
Genisco Technology Corporation
Components/Genistron Div.
18435 Susana Road
Compton, California 90221

21. California Electronic Manufacturing Co.
P.O. Box 555
Alamo, California 94507

22. Curtis Instruments Inc.
351-353 Lexington Avenue
Mount Kisco, New York

23. D.C. Current Sensors, Bullentin CRS 7-65
Pioneer Magnestic Incorporated
1745 Berheley Street
Santa Monica, California 90404

24. Delco Laboratories
Anderson, Indiana

25. Deltron, Inc.
Wissahiehon Ave.
North Wales, Penn 19454

26. Development of Techniques and Equipment to Improve Reliability of Automotive Diagnosis
E. L. Cline Clayton Manufacturing Co.
Society of Automotive Engineers, Inc. 670517

27. Diagnosis by Dynamometer
Jack B. Remmerer
Machine Design June 23, 1966

28. Direct Current Transducer, Bulletin DC-9
Airpex Electronics
Seminole Division
P.O. Box 8488
Fort Lauderdale Fla. 33310

29. Direct Current Sensors
American Aerospace Controls, Inc.
129 Verfi St.
Farmingdale, N.Y.

30. Diversified Electronics Inc.
Evansville Indiana 47712

31. Double the Output of your Sensors
Ron Paitich, Varian Associates
Palo Alto, California
Electronic Design 17
August 15, 1968

32. Dynamic Testing Under Computer Control
Louis S. Leonard Ford Motor Company
Frank E. LaVerghetter Philco-Ford Corporation
Society of Automotive Engineers, Inc.
485 Lexington Avenue,
New York, N.Y. 10017
Automotive Engineering Congress
Detroit, Michigan
Jan 8-12, 1968 680131

33. Eagle-Picher Industries, Inc., Electronics Division
Joplin, Missouri

34. Electrical Machines, Direct & Alternating Current
Charles S. Siskind
Copyright, 1959, by McGraw-Hill Book Company, Inc.
Second Edition

35. Energy Storage and the Criteria for Proper Ignition in the Internal Combustion Engine
Carlile R. Stevens
IEEE Transactions on Industrial
Electronics and Control Instrumentation
March 1965

36. Engine Vibration Signals as an Aid to Fault Diagnosis 670872
L.R. Hulls and J.R. Wellch Philco Ford Corporation
Society of Automotive Engineers, Inc.
Aeronautic & Space Engineering and Manufacturing Meeting

37. Esterline Angus
Division of Esterline Corp.
P.O. Box 24000
Indianapolis, Indiana 46224

38. Electronics Applied to Medium-Speed Engines
W.K. Bruffell and D. Williams
Paper 5
Proc. Insts. Mech. Engrs. 1965-66

39. Fox Products Company
4720 North Eighteenth Street
Philadelphia, Pennsylvania

40. F.W. Bell Inc.
1356 Norton Avenue
Columbus, Ohio 43212

41. Galvanomagnetic Devices
H. Weiss, Siemens Aktiengesellschaft
IEEE Spectrum
January 1968

42. General Motors, General Service
Detroit, Michigan

43. Glenn's 1967 Auto Repair Manual
Harold T. Glenn
Copyright, 1967, by H.T. Glenn

44. Go-Power Systems
1880 Embarcadero Road
Palo Alto, Calfornia, 94303

45. Hewlett-Packard
1501 Page Mill Road
Palo Alto, California,

46. Hall Effect Put in IC
Robert H. Cushmon, Eastern Editor
EDN November 11, 1968

47. Lincoln Saint Louis
4010 Goodfellow Blvd.
St. Louis, Missouri

48. Lion Research Corporation
60 Bridge Street
Newton, Massachusetts 02195

49. Macarr Incorporated
4360 Bullard Avenue
New York, N.Y. 10466

50. Motors Auto Repair Manual, 1967
30th Edition
Ralph Ritchen
Published by Motor, Copyright, 1967 by the Hearst Corportation

51. Marquette Corporation
5075 Wayzata Boulevard
Minneapolis, Minn, 55416

52. Master Specialties Company
1640 Monrovia
Costa Mesa, California 92627

53. MCG Electronics Inc.
279 Skidmore Road
Decr Park, N.Y. 11729

54. Magsense Instrumentation
Control Data Corporation
4455 Eastgate Mall
La Jolla, California 92037

55. Magnetic Pulse Pickup
Bulletin 95-8072
Honeywell, Inc.
Apparatus Controls Division
2701 Forth Avenue South
Minneapolis, Minnesota 55408

56. New Ignition System for Cars
R. Van Houten and John C. Schweitzer
Delta Products, Inc.
Grand Junction, Colo.

57. Ohio Semitronics, Inc.
1205 Chesapeake Ave.
Columbus, Ohio 43212

58. Philco-Ford
Service and Research Center
Rotunda Drive
Detroit, Michigan

59. Prestolite
511 Hamilton Street
Toledo, Ohio

60. Proximity Switches
Electro Products Laborotories, Inc.
6125 West Howard Street
Chicgo, Illinois 60648

61. Power Instruments Inc.
Idea Bulletin No. 2
Magnetic Pickup Ideas
7352 N. Lawndale Ave.
Skikie, Ill. 60076

62. Pastorize Electronics, Inc.
385 Elliot St.
Newton Upper Falls, Mass 02164

63. Ram Motor, Inc.
1903 Barrett Road
Troy, Michigan

64. R.N. Industries
4900 Cadillac
Detroit, Michigan

65. Ready Multipurpose Automatic Inspection and Diagnostic System
A. Chalfin, G. Staton, R. J. Brachmau
US Army
Frankford Arsenal, Phila Pa.

66. RFL Industries
Instrumentation Division
Boonton, New Jersey 07005

67. Simpson Automotive Sales
Division of Simpson Electric Company
853 Dundee Avenue
Elgin, Illinois 60120

68. Sensotec Division
1400 Holly Avenue
Columbus, Ohio 43212

69. Sun Three Minute Battery Test
Sun Electric Corporation
Harlem and Auondale
Chicago, Illinois 60631

70. Sterling International Corporation
41-26 27th Street
Long Island City, New York

71. Sun Electric Corporation
6323 Avondale Road
Chicago, Illinois

72. Tekscope Voll No. 2
April 1969
Tektron IX, Inc.
P.O. Box 500
Beaverton, Orengon 97005

73. Transducer Tips
Electromechanical Design Magazine
February 1969

74. Transducers and Operational Amplifiers
H. Doeleman
Glassco Instrument Co.
Instruments and Control Systems Vol 42

75. Three Hall Effect Devices
M. Nalecz, A. Dunajski,
W. Torbicz, H. Aiomecki
Instruments and Control Systems Vol 41
January 1968

76. This is Peizoelectricity
E. Eller
IEEE Student Journal Vol 4, No. 5
September 1966

77. Turbine Engine Condition by Sonic Analyzer Method
J. L. Frarey Curtiss - Wright Corporation
1965 ATA Engineering and Maintenance Conference

78. Tower Ford - Diagnostic Lane
Monument Street
Baltimore, Maryland

79. TM-9-2320-209-20
Organizational Maintenance Manual for 2-1/2 Ton, 6 x 6 Chassis Truck
Headquarters, Department of the Army
April, 1965

80. TM-9-2320-211-20
Organizational Maintenance Manual for 5 Ton, 6 x 6 Chassis Truck
Headquarters, Department of the Army
March, 1963

81. TM-9-2320-218-20
Organizational Maintenance Manual for Truck, Utility, 1/4 Ton, 4 x 4, M151
Headquarters, Department of the Army
April, 1963

82. Western Reserve Electronics Inc.
12430 Euclid Avenue
Cleveland, Ohio

83. Whittaker Corporation, Prime Battery Division
Santa Face, California

84. Whittaker Corporation
Instrument Systems Division
9601 Canoga Ave.
Chatsworth, California 91311

85. 421 Test for All 12 Volt Lead Acid Automotive Batteries
Delco Laboratoies
Anderson, Indiana

DISTRIBUTION LIST

Report No. 10717

| Address | No. of Copies |
|---|---|
| Commander<br>Defense Documentation Center<br>Cameron Station<br>Alexandria, Virginia 22314 | 20 |
| Commanding General<br>US Army Tank Automotive Command<br>Warren, Michigan 48090<br>ATTN: Chief Scientist/Technical Director of Laboratories (AMSTA-CL) | 1 |
| Chief Engineer (AMSTA-CR) | 1 |
| Research Library (AMSTA-BSL) | 3 |
| Electrical Division (AMSTA-BE) | 9 |
| Diagnostic Equipment Branch (AMSTA-RED) | 10 |
| Maintainability Engineering (AMSTA-MO) | 3 |

Unclassified

Security Classification

**DOCUMENT CONTROL DATA - R&D**

*(Security classification of title, body of abstract and indexing annotation must be entered when the overall report is classified)*

1. ORIGINATING ACTIVITY *(Corporate author)*
Westinghouse Electric Corporation
P. O. Box 502
Detroit, Michigan 48232

2a. REPORT SECURITY CLASSIFICATION
Unclassified

2b. GR

3. REPORT TITLE
Electrical Systems Diagnostic Study For Wheeled Vehicles M151, M44, M37, M715, M705, M651, M39

4. DESCRIPTIVE NOTES *(Type of report and inclusive dates)*
Final Engineering Report January 1969 to July 1969

5. AUTHOR(S) *(Last name, first name, initial)*
Jones, Frederick W., Project Engineer
Ramsburg, Donald C.
Sheppard, Charlie A

6. REPORT DATE
1 September 1969

7a. TOTAL NO. OF PAGES
148

7b. NO. OF REFS
2

8a. CONTRACT OR GRANT NO. DAAE07-67-C-1563
Modification P006

b. PROJECT NO.

c.

d.

9a. ORIGINATOR'S REPORT NUMBER(S)
10717

9b. OTHER REPORT NO(S) *(Any other numbers that may be assigned this report)*

10. AVAILABILITY/LIMITATION NOTICES
Distribution of this document is unlimited.

11. SUPPLEMENTARY NOTES

12. SPONSORING MILITARY ACTIVITY
Department of the Army
US Army Tank Automotive Command
Warren, Michigan 48090

13. ABSTRACT


The final report describes the results of a study undertaken by Westinghouse for USATACOM on the organizational maintenance of US Army wheeled vehicles. Specifically, the study was addressed to automatic test equipment fault-isolation procedures for the vehicle electrical system; engine malfunctions were not diagnosed.

Valid diagnostic techniques developed in this study program will eliminate classical troubleshooting by unskilled personnel and assist operator judgement in pin-pointing faulty components in the field.


DD FORM 1 JAN 64 1473

Unclassified

Security Classification

Unclassified

Security Classification

| 14. KEY WORDS | LINK A ROLE | LINK A WT | LINK B ROLE | LINK B WT | LINK C ROLE | LINK C WT |
|---|---|---|---|---|---|---|
| Electrical System, Wheeled Vehicle | | | | | | |
| Diagnostic Test Equipment | | | | | | |
| Fault Isolation Techniques | | | | | | |
| Organizational Maintenance | | | | | | |

INSTRUCTIONS

1. ORIGINATING ACTIVITY: Enter the name and address of the contractor, subcontractor, grantee, Department of Defense activity or other organization *(corporate author)* issuing the report.

2a. REPORT SECURITY CLASSIFICATION: Enter the overall security classification of the report. Indicate whether "Restricted Data" is included. Marking is to be in accordance with appropriate security regulations.

2b. GROUP: Automatic downgrading is specified in DoD Directive 5200.10 and Armed Forces Industrial Manual. Enter the group number. Also, when applicable, show that optional markings have been used for Group 3 and Group 4 as authorized.

3. REPORT TITLE: Enter the complete report title in all capital letters. Titles in all cases should be unclassified. If a meaningful title cannot be selected without classification, show title classification in all capitals in parenthesis immediately following the title.

4. DESCRIPTIVE NOTES: If appropriate, enter the type of report, e.g., interim, progress, summary, annual, or final. Give the inclusive dates when a specific reporting period is covered.

5. AUTHOR(S): Enter the name(s) of author(s) as shown on or in the report. Enter last name, first name, middle initial. If military, show rank and branch of service. The name of the principal author is an absolute minimum requirement.

6. REPORT DATE: Enter the date of the report as day, month, year; or month, year. If more than one date appears on the report, use date of publication.

7a. TOTAL NUMBER OF PAGES: The total page count should follow normal pagination procedures, i.e., enter the number of pages containing information.

7b. NUMBER OF REFERENCES: Enter the total number of references cited in the report.

8a. CONTRACT OR GRANT NUMBER: If appropriate, enter the applicable number of the contract or grant under which the report was written.

8b, 8c, & 8d. PROJECT NUMBER: Enter the appropriate military department identification, such as project number, subproject number, system numbers, task number, etc.

9a. ORIGINATOR'S REPORT NUMBER(S): Enter the official report number by which the document will be identified and controlled by the originating activity. This number must be unique to this report.

9b. OTHER REPORT NUMBER(S): If the report has been assigned any other report numbers *(either by the originator or by the sponsor)*, also enter this number(s).

10. AVAILABILITY/LIMITATION NOTICES: Enter any limitations on further dissemination of the report, other than those imposed by security classification, using standard statements such as:

(1) "Qualified requesters may obtain copies of this report from DDC."

(2) "Foreign announcement and dissemination of this report by DDC is not authorized."

(3) "U. S. Government agencies may obtain copies of this report directly from DDC. Other qualified DDC users shall request through _____."

(4) "U. S. military agencies may obtain copies of this report directly from DDC. Other qualified users shall request through _____."

(5) "All distribution of this report is controlled. Qualified DDC users shall request through _____."

If the report has been furnished to the Office of Technical Services, Department of Commerce, for sale to the public, indicate this fact and enter the price, if known.

11. SUPPLEMENTARY NOTES: Use for additional explanatory notes.

12. SPONSORING MILITARY ACTIVITY: Enter the name of the departmental project office or laboratory sponsoring *(paying for)* the research and development. Include address.

13. ABSTRACT: Enter an abstract giving a brief and factual summary of the document indicative of the report, even though it may also appear elsewhere in the body of the technical report. If additional space is required, a continuation sheet shall be attached.

It is highly desirable that the abstract of classified reports be unclassified. Each paragraph of the abstract shall end with an indication of the military security classification of the information in the paragraph, represented as *(TS), (S), (C), or (U)*.

There is no limitation on the length of the abstract. However, the suggested length is from 150 to 225 words.

14. KEY WORDS: Key words are technically meaningful terms or short phrases that characterize a report and may be used as index entries for cataloging the report. Key words must be selected so that no security classification is required. Idenfiers, such as equipment model designation, trade name, military project code name, geographic location, may be used as key words but will be followed by an indication of technical context. The assignment of links, rules, and weights is optional.

Unclassified

Security Classification