AD AD699342

TECHNICAL REPORT
70-34-AD

A PARACHUTE RETROROCKET RECOVERY SYSTEM FOR AIRDROP OF HEAVY LOADS

by

George Chakoian

DDC
JAN 20 1970
B

November 1969

UNITED STATES ARMY
NATICK LABORATORIES
Natick, Massachusetts 01760

This document has been approved for public release and sale; its distribution is unlimited.

Airdrop Engineering Laboratory

35

This document has been approved for public release and sale; its distribution is unlimited.

Citation of trade names in this report does not constitute an official indorsement or approval of the use of such items.

Destroy this report when no longer needed. Do not return it to the originator.

ACCESSION for
CFSTI WHITE SECTION
DDC BUFF SECTION
UNANNOUNCED
JUSTIFICATION
BY
DISTRIBUTION/AVAILABILITY CODES
DIST. AVAIL. and/or SPECIAL
1

This document has been approved
for public release and sale;
its distribution is unlimited

AD _____

Technical Report
70-34-AD

A Parachute Retrorocket Recovery System for Airdrop of Heavy Loads

by

George Chakoian

November 1969

Project Reference:
1F162203D195

Airdrop Engineering Laboratory
US Army Natick Laboratories
Natick, Massachusetts 01760

FOREWORD

This report was prepared from several studies and exploratory development investigations of airdrop systems. As part of an overall task to investigate various concepts for low altitude airdrop, this particular concept considers the use of parachutes in combination with a cluster of retrorockets to decelerate the airdrop cargo sufficiently for safe ground impact when airdropped from an aircraft at a height of less than 500 feet.

This report was originally presented at an Aerodynamic Deceleration Symposium sponsored by the Advisory Group for Aerospace Research and Development, the German Society for Aeronautics and Astronautics, and the Braunschweig Research Center of the German Research Institute for Aeronautics and Astronautics at the Technical University of Braunschweig, Braunschweig, Federal Republic of Germany on 15-19 September 1969.

The work was conducted under Project No. 1F162203D195, Exploratory Development of Airdrop Systems.

TABLE OF CONTENTS

	Page
List of Figures	v
Abstract	vi
Introduction	1
Background	3
In-Depth Exploratory Development Objectives	6
PRADS System Operation and Description	6
System Tests	11
Rocket Pack Design	14
Ground Sensing System	20
Economic Study	21
50,000 Pound PRADS	22
Conclusions	25
References	26
Table 1 - Summary of PRADS Live Airdrop Tests	12
Table 2 - Estimated Cost and Rigged Weight of PRADS vs. Standard Parachute System	23

List of Figures

Figure		Page
1	Airdrop Altitudes - PRADS vs. Current System	2
2	PRADS Components	7
3	PRADS Sequence of Operations	9
4	Parachute Deployment Time vs. Number of Parachutes in Cluster	13
5	Parachute Inflation Time vs. Number of Parachutes in Cluster	15
6	PRADS - Sequential Photographs of a 35,000 Pound Airdrop	16
7	PRADS - 35,000 Pound Airdrop During Rocket Fire	17
8	Normal Flame Pattern	19
9	Abnormal Flame Pattern	19
10	Computer Trajectories for 50,000 Pound PRADS	24

ABSTRACT

This report presents the results of an in-depth exploratory development study of a parachute retrorocket recovery system for the airdrop of cargo loads weighing up to 50,000 pounds and the results of actual drop tests of loads weighing from 3,000 to 35,000 pounds.

This study indicates that a parachute retrorocket recovery system is particularly feasible for the recovery of airdrop loads and may prove to be the only practical system for heavy loads, especially if low altitude is a requirement.

1. Introduction

The ever increasing demands of modern warfare to deliver supplies and equipment accurately, safely and with the maximum element of surprise, has created a requirement for new concepts to airdrop heavy loads.

Although the airdrop system for supplies and equipment presently in use is adequate in many respects, its current capability is limited to the recovery of a 25,000 pound load airdropped from an altitude of 1100 feet.

The United States Army has established a requirement for the airdrop of loads weighing up to 35,000 pounds from altitudes below 500 feet. To meet this requirement, the concept of using a Parachute Retrorocket Airdrop System (PRADS) has been studied under an exploratory development program. This concept uses parachutes in combination with a cluster of retrorockets to decelerate the airdrop cargo's horizontal and vertical velocities sufficiently for safe ground impact when airdropped from an aircraft at an altitude of 500 feet above the terrain.

Also, the development of the United States Air Force C-5A Aircraft with its increased unit load capability has reinforced the requirement to develop a new concept for airdropping heavy loads.

The problems associated with an all-parachute recovery system, include uneven loading of the parachutes during deployment, poor parachute inflation time repeatability, and the

increased possibility of one or more parachutes failing to inflate with the resulting loss in altitude before achieving a desired terminal velocity. These can be lessened with the use of fewer and smaller diameter parachutes in combination with retrorockets.

The advantages of a parachute retrorocket system are:

a. Airdrops can be made from lower altitudes. This offers several major benefits such as minimizing the detection and vulnerability of the drop aircraft to enemy ground forces (Fig. 1) and less drifting of the load since the load will be in the air for a shorter period of time.

b. Parachute opening is more consistent because fewer and smaller diameter parachutes are used.

c. Fewer and smaller size parachutes will decrease parachute deployment and inflation times which in turn will reduce the horizontal range distance.

DROP ALTITUDE

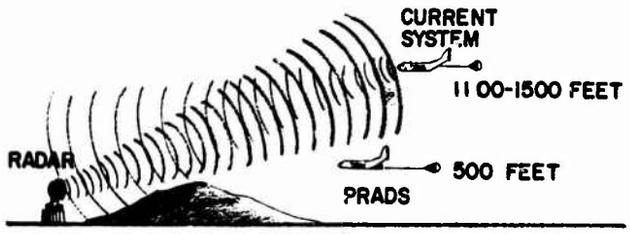

FIGURE 1. AIRDROP ALTITUDES- PRADS VS. CURRENT SYSTEM

2. Background

A study[1] was initiated in July 1961 to determine the feasibility of using retrorockets to reduce the velocity of airdropped cargo loads weighing in the range of 2,000 to 35,000 pounds from a parachute decelerated velocity of 40 to 60 feet per seconds to 25 feet per second at ground impact. The results of this study indicated that a recovery system consisting of parachutes and retrorockets was feasible, and would reduce the weight and volume of the recovery system when compared to an all-parachute system.

Another study[2] was initiated in July 1962 to establish the feasibility of using rockets to assist parachute systems at absolute altitudes as low as 200 feet. The conclusions of this study indicated that a parachute retrorocket system was considered to be a practical solution to the low altitude requirement.

A live rocket airdrop test was conducted for the US Army Natick Laboratories on 21 February 1963 at the Yuma Test Station, Yuma, Arizona[3]. A 4,000-pound load with four G-13, 32 ft. diameter, hemispherical type parachutes and six modified M-8 rocket motors was airdropped from a C-130 Aircraft at 130 knots airspeed and 1500 feet absolute altitude. Five of the six rockets failed to fire and one rocket fired as the load impacted. Failure of the rockets to fire was attributed to electrical ignition problems. Based on the test, the project was suspended pending development of a rocket retardation system.

A study[4] conducted by a contractor between July 1965 and August 1966 for the Air Force Flight Dynamics Laboratory presented analytical studies of twelve concepts to define optimum airdrop systems in the 35,000 to 70,000-pound load range.

This study indicated that:

a. The recovery of the payload from descent velocity to ground impact velocity is best accomplished with a modular rocket motor package.

b. Minimum airdrop altitude for a parachute retrorocket system is approximately 700 feet as compared to approximately 1200 feet for an all parachute system.

c. In high wind conditions load tumble following cargo impact is less frequent with the parachute retrorocket system than with the parachute system.

As part of an overall task to investigate various concepts for low altitude airdrop systems, the US Army Natick Laboratories studied several basic concepts under an exploratory development program. A contractor conducted a preliminary exploratory development and feasibility testing program[5,6] of PRADS during the period 8 December 1964 and 31 August 1966. Successful performance was demonstrated in tests with loads of 4000 to 10,000 pounds from drop altitudes of 300 to 500 feet. Twenty-three full scale system flight tests including eleven tests with live rockets were conducted from US Air Force C-130 Aircraft. The major problems confronted were attributed to

weak detonating fuse connections resulting in ground sensing signal system failures and static discharge prematurely operating the fuse. The essential objectives of the test program were achieved. The conclusions of this PRADS program were that a parachute retrorocket airdrop system's reliability, weight, bulk, complexity and cost of reuseable hardware are approximately equivalent to the characteristics of the existing parachute airdrop system. The basic concept of a PRADS for low altitude airdrop was proven to be feasible.

Following completion of the concept studies, four of these concepts were evaluated to be unsuitable technically or operationally and the remaining three concepts consisting of PRADS, Extraction by Recovery Parachutes and Parachute Inflation Aids were selected for additional study. The latter two concepts were combined to form Extraction by Inflation Aided Recovery Parachutes (EXIARP).

In order to acquire a more stringent detailed analysis and experimental evaluation and to define the technical, operational, and economic characteristics of this system, a subsequent in-depth exploratory development program of PRADS was conducted under contract from September 1967 to July 1969.

The results of this study[7] are presently being evaluated and the preliminary information available as of this writing is presented herein.

3. In-Depth Exploratory Development Objectives

The in-depth exploratory development of PRADS had the following two main objectives:

a. To extend the 10,000 pound load weight capability demonstrated during preliminary exploratory development to 35,000 pounds from 500 feet absolute altitude.

b. To produce a proposed PRADS engineering development model design as a result of testing, study and analysis.

4. PRADS System Operation and Description

The proposed Parachute Retrorocket Airdrop System engineering development model components are shown in Figure 2, and consists of (a) parachutes, 48 feet in diameter, varying in number from one to a cluster of eight to accurately control the descent rate and to accomodate the different loads in the range of 2000 to 35,000 pounds; (b) a ground-sensing system to accurately initiate rocket firing at a programmed height: and (c) a retrorocket system to reduce the velocity of the load to less than 28.5 feet per second at impact over a range of environmental conditions.

The system that was tested during exploratory development is similar to the proposed PRADS engineering development model with the following exceptions:

a. Parachutes - 24', 36' and 46' diameter tested: 48' diameter proposed.

b. Ground Sensing Device - Flexible probe tested; laser optical system proposed.

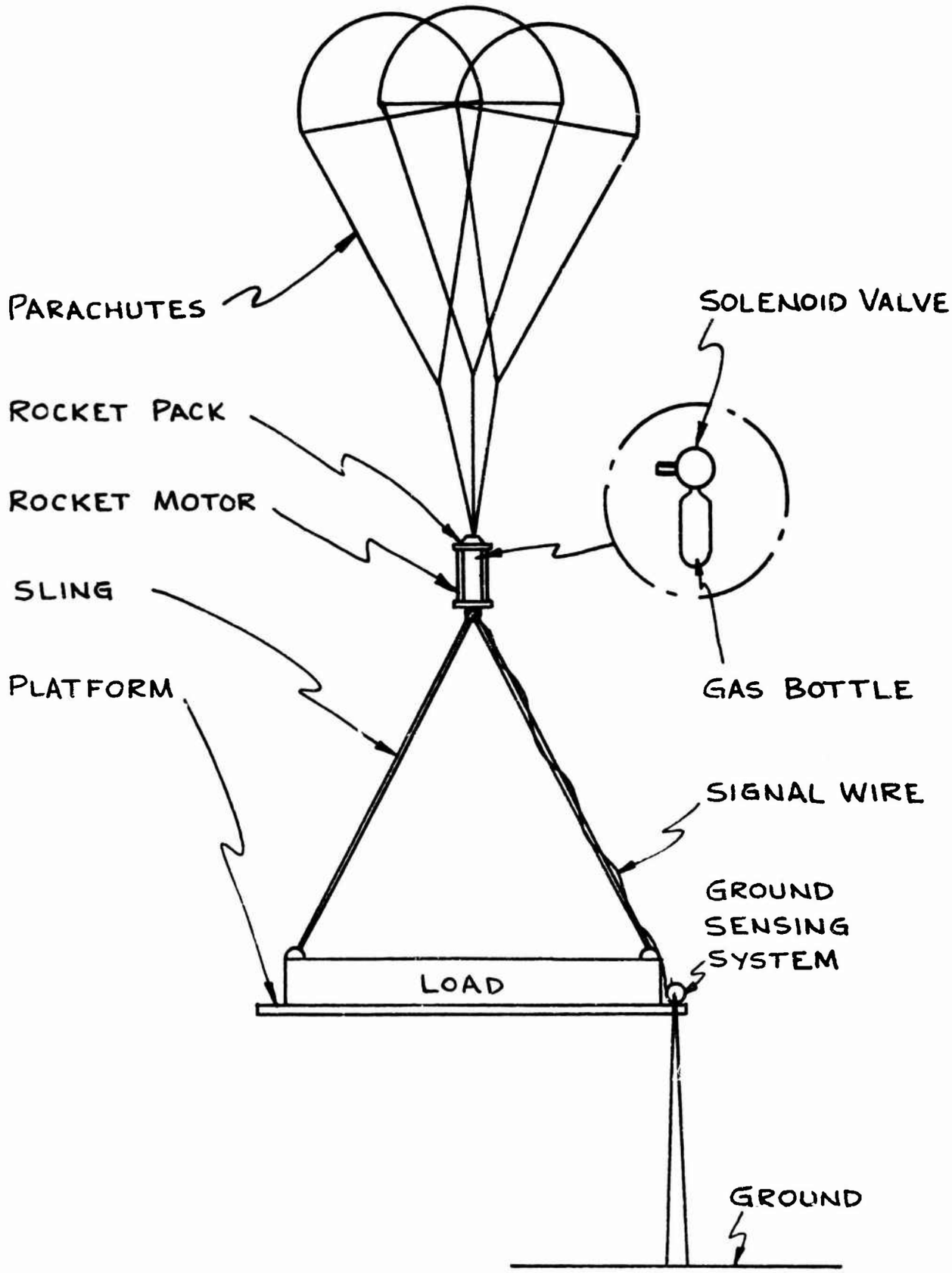

FIGURE 2. PRADS COMPONENTS

c. Rocket Motors - 4200 pounds vertical thrust tested; 12,900 vertical thrust proposed.

The following system operation and description is of the proposed PRADS engineering development model (Fig. 3 - Sequence of Operations).

a. Extraction Parachute Release and Deployment. At the proper time the pilot releases the extraction parachute(s) which swings down and out on its pendulum. Once in the air stream it will be picked up by the wind and carried back. The extraction parachute(s) within its bag goes back and deploys the extraction line. When the extraction line becomes taut the bag strips off the extraction parachute. The extraction parachute then opens.

b. Load Release and Extraction. The extraction parachute opening force rapidly builds up to 1 to 1-1/2G's. The load is released by a 1/2 to 1G restraint. The load is then extracted by the extraction parachute as in the existing system.

c. Extraction Force Transfer. The standard extraction force transfer device is actuated as in the existing system to transfer the extraction force to the main canopy bags.

d. Main Canopy Deployment. The main canopies (within deployment bags) are extracted from the load by the extraction parachute(s) as in the existing system. Since the canopies are smaller than those in an all parachute system, the risers and suspension lines are shorter and the load is not left unsuspended as long as in the conventional system. This results in a

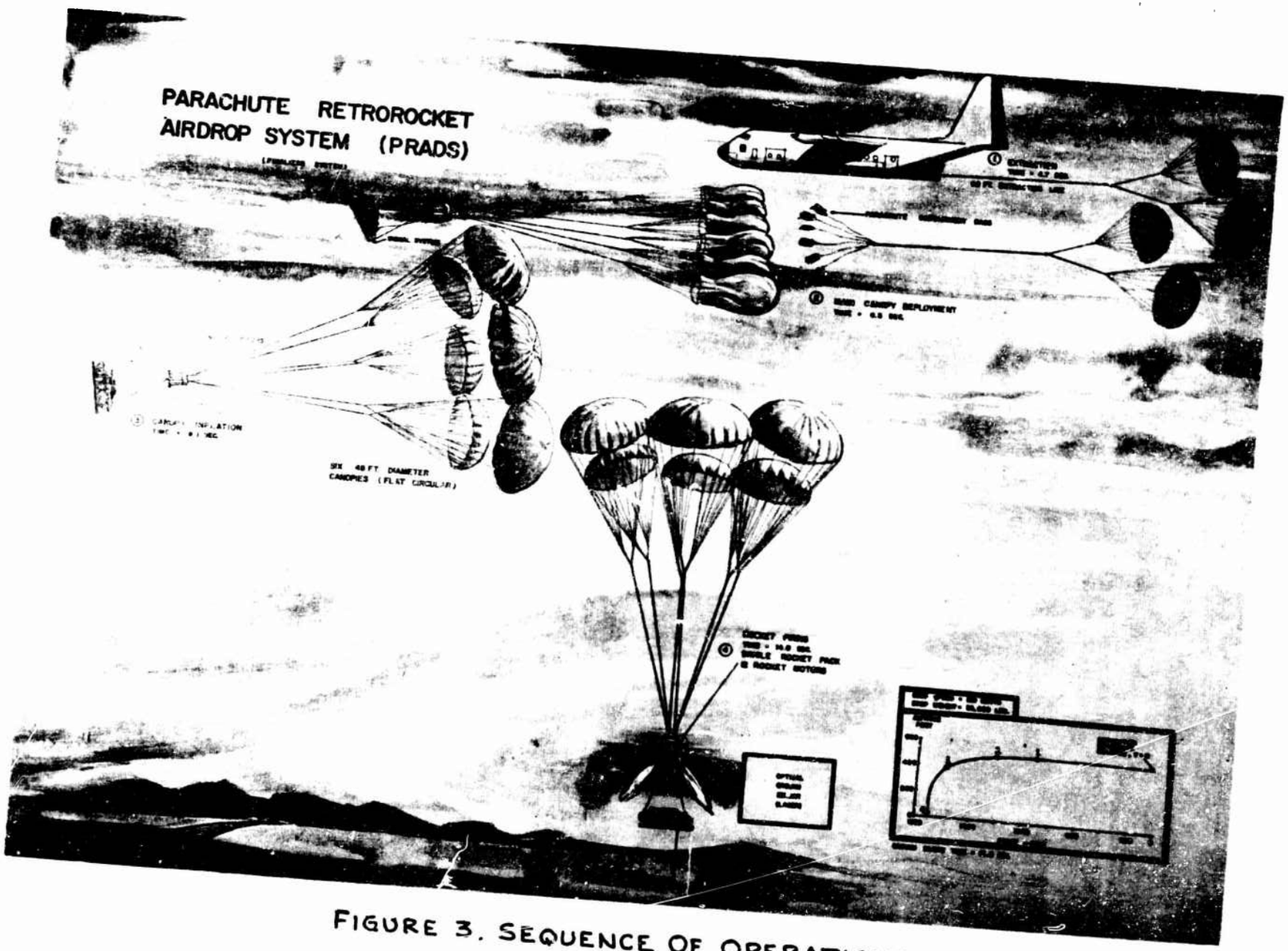

FIGURE 3. SEQUENCE OF OPERATIONS

favorable reduction in the amount of tumbling. The extraction parachute and bags are allowed to go free of the load after deployment.

e. Canopy Inflation and Rocket Pack Extraction. Upon main canopy deployment, inflation to full diameter is achieved without reefing.

f. Gas Valve Armed. The gas valve is armed by a lanyard from the rear of the load just before the suspension slings become taut. The gas valve which is a mechanical safety cannot be shuttled and the rockets cannot be fired until the safety is actuated.

g. Ground Sensor Armed. A lanyard from the rocket pack activates the laser ground sensing circuitry just before the rear suspension slings become taut.

h. Load Descent. When the main canopies are fully open the load descends at a medium velocity of 55 to 70 feet per second.

i. Ground Sensor Actuates Valve. When the load reaches approximately 25 feet above the ground the crossed beam from the laser in the optical ground sensing device comes in view of the viewing lens and the solenoid valve is actuated.

j. Rockets Fire. The gas valve shuttles and high pressure gas is ported to the rocket motors. Dual primers in the rocket motors are fired by gas operated pistons. The

rocket motor thrust axis is at 35 degrees with the vertical and its vertical component is approximately 12,900 pounds at 70°F.

One rocket motor is used for approximately each 3000 to 4000 pounds of load. The load is decelerated with approximately 3 to 4G's net loading during a nominal 1/2 second burning time.

k. Rocket Performance. Each rocket motor produces nominally 7250 pound-seconds total impulse or 5940 pound-seconds vertical impulse.

l. Load Impact. The rockets normally burn out above the ground and the load has a short free fall. Crushable paper honeycomb is used as in the existing system to cushion the final impact.

5. System Tests

A total of thirty-four PRADS drop tests were completed during the in-depth exploratory development program, thirteen of which were with live rocket motors. Nine of these were successful. Table 1 shows a summary of the PRADS live airdrop tests. Parachute deployment performance data of the 46 ft. diameter parachutes in clusters is shown in Figure 4. The points on this chart were reduced directly from airdrop test films and indicate that the parachute deployment time is within the range of 0.8 seconds to 2.4 seconds. The dash line on this chart represents the average deployment time for tests using 1 to 8 parachutes. The deployment time shown is the time from parachute extraction force transfer to when the bag separates from the apex of the main canopy.

Test No.	Date	Gross Load Wt-lbs	Release Alt/Vel. Ft/KIAS	Main Canopies Dia.-Ft.	Main Canopies No.	Total Riser Length Ft.	Descent Vel. at Rocket Firing Ft./Sec.	Impact Vel. Ft./Sec.	Remarks
1	3/11/68	5120	400/130	24	4	28	59	24	Good Performance (One Signal System Broke Away)
2	3/14/68	5120	315/130	24	4	28	70	28	Good Performance (Minimum altitude)
6	8/6/68	7500	2087/135	24	6	37	61	61	Rocket Motor Failed (nozzle-locking ring not seated)
10	9/16/68	7500	2085/137	24	6	37	62	19	Good Performance (High altitude)
11	9/19/68	7500	1947/139	24	6	37	65	11	Good Performance (High altitude)
12	9/26/68	7500	514/143	24	6	37	62	11	Good Performance (Operational altitude)
14	10/15/68	14000	539/148	36	5	37	60	42	Probe Swinging Caused Late Rocket Firing
19	12/10/68	14000	523/140	46	3	35	54	17	Good Performance
21	12/19/68	18500	436/122	46	4	45	54	27	Good Performance
22	12/27/68	24000	473/129	46	5	53	60	17	Good Performance
23	1/2[illegible]/69	35000	443/138	46	7	53	63	45	One Probe Not Completely Cut, [illegible] Parachute Risers Failed, Load Overturned
25	2/14/69	18600	596/134	46	4	45	67	41	One of 4 Parachute Risers Failed. Slings failed during Rocket Firing
26	2/27/69	35000	624/138	46	8	53	53	20	Rocket plumes converged and burned Paper Honeycomb

Table 1. Summary of PRADS Live Airdrop Tests

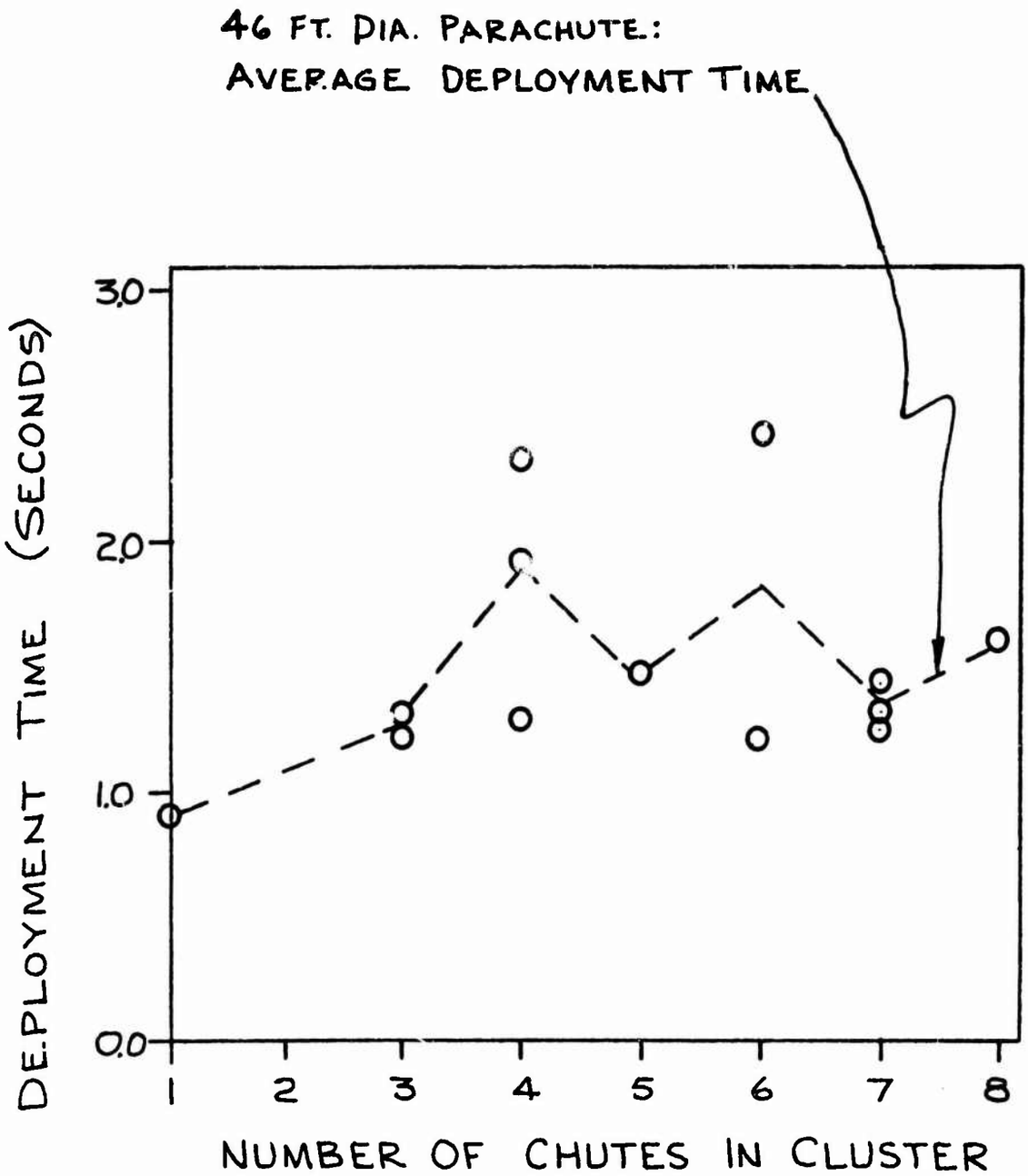

FIGURE 4. PARACHUTE DEPLOYMENT TIME VS. NUMBER OF PARACHUTES IN CLUSTER

Figure 5 shows the 46 ft. diameter parachute inflation times reduced directly from test films and the predicted parachute inflation times of the proposed 48 ft. diameter parachute. This chart shows that inflation times vary from 1.5 seconds to 4.0 seconds when using 1 to 8 parachutes. The dash lines on this chart represents the average parachute cluster inflation times for 46 ft. diameter parachutes with the various cluster configurations. This average inflation time was then used as an input in the PRADS computer program which duplicated the overall trajectory and force time data obtained from the actual drop tests that were made at El Centro, California. The solid line represents the predicted average parachute cluster inflation times for the proposed 48 ft. diameter parachutes in the PRADS engineering development model. Figure 6 shows PRADS sequential photographs of a 35,000 pound airdrop. Figure 7 is a close-up photograph of a PRADS 35,000 pound airdrop showing the rockets firing just prior to impact.

6. Rocket Pack Design

During the exploratory development program one rocket motor was used for approximately each 1000-pound load. Two sizes of rocket packs were used - a small pack for eight rocket motors and a larger pack for eighteen rocket motors. For loads requiring more than eighteen rocket motors, two rocket packs were used in tandem.

When using the dual rocket pack with 32 rocket motors, rocket blast and plume convergence created an undesireable

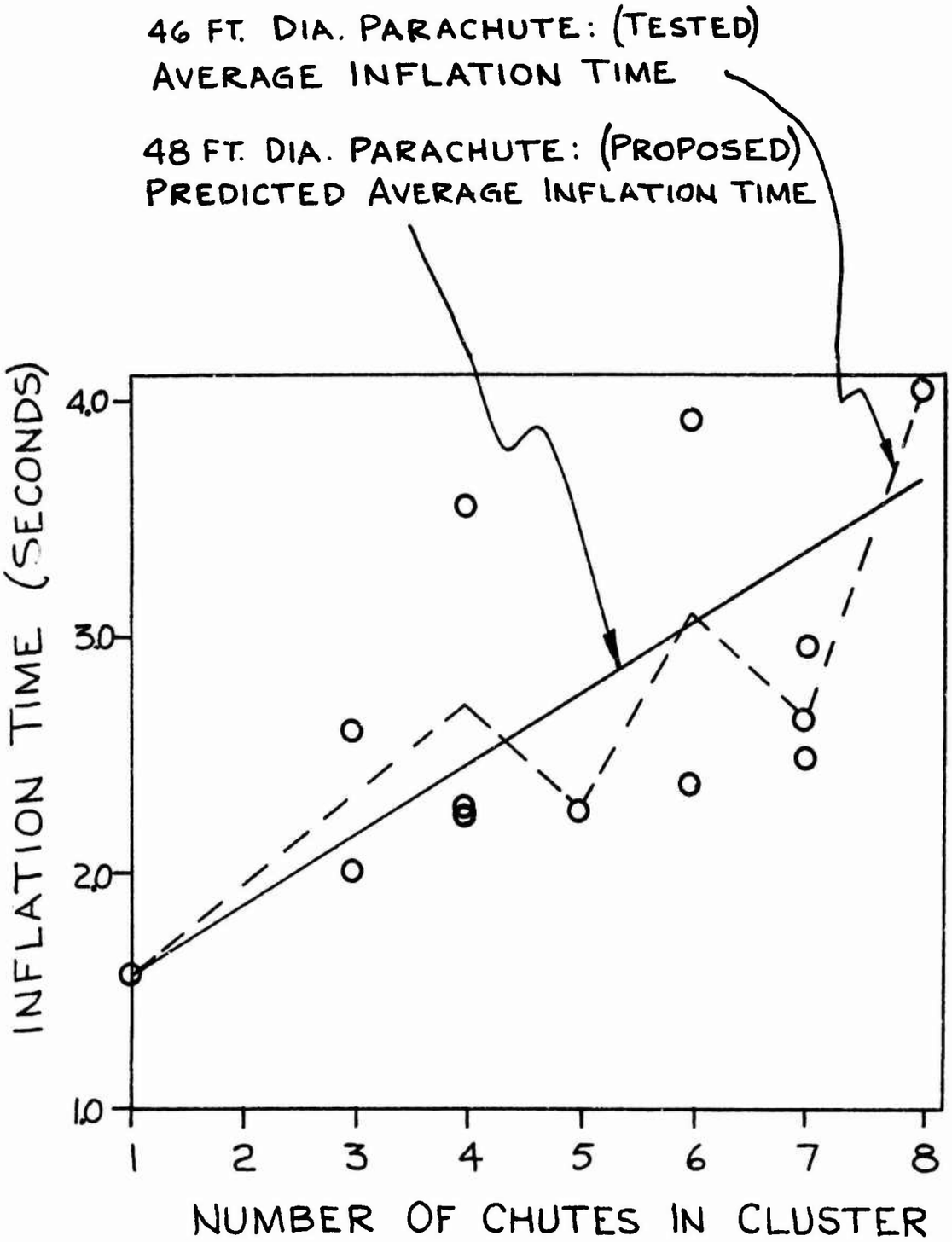

FIGURE 5. PARACHUTE INFLATION TIME VS. NUMBER OF PARACHUTES IN CLUSTER

LOAD WEIGHT - 35,000 POUNDS
DROP ALTITUDE - 624 FEET
IMPACT VELOCITY - 20 FT/SEC
MAIN CANOPIES - 46 FT DIA.
TIME T_0 = FIRST SIGHTING OF EXTRACTION PARACHUTE

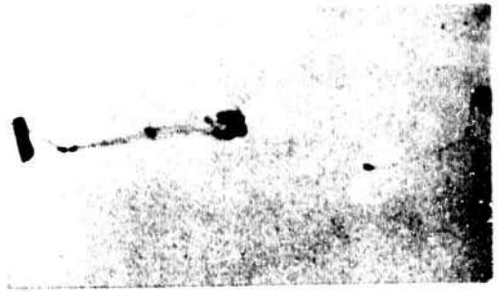

2. MAIN CANOPY DEPLOYMENT

$T - T_0$ = 5.6 SEC.

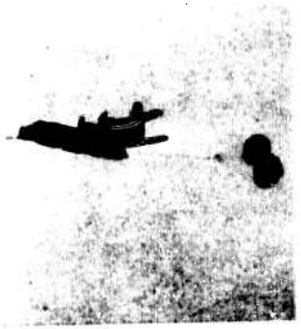

1. EXTRACTION

$T - T_0$ = 4.0 SEC.

3. CANOPY INFLATION AND LOAD DESCENT

$T - T_0$ = 11.7 SEC.

4. ROCKET FIRING

$T - T_0$ = 13.3 SEC.

FOR
AIRDROP ENGINEERING LABORATORY
U.S. ARMY NATICK LABORATORIES, NATICK, MASS.

PRADS

PARACHUTE RETROROCKET
AIRDROP SYSTEM

STENCEL AERO ENGINEERING CORPORATION
ASHEVILLE, NORTH CAROLINA

CONTRACT DAAG17-68-C-0019
PROJECT NO. 1M121401D195

FIGURE 6. PRADS-SEQUENTIAL PHOTOGRAPHS OF A 35,000 POUND AIRDROP

FIGURE 7. PRADS 35,000 POUND AIRDROP DURING ROCKET FIRE

condition. The rocket flame pattern changed during rocket burning from that normally expected as shown in Figure 8, to an abnormal pattern as shown in Figure 9, where the rocket exhaust plumes deflected downward almost vertically during the last half of burning.

To study this problem experiments were performed with a 1/20th scale model to duplicate the effects caused by the exhaust gases of the rocket motors. Cross-correlation was validated between the full-scale results and scale model results. The conclusions of these tests indicate no significant tendency for the plumes of the single rocket pack configuration tested to converge. To alleviate this plume convergence problem the proposed engineering development model will have one rocket pack throughout the load range.

There were also other factors that were considered to correct this problem, such as reducing the thrust with a proportionate increase of burn time, nozzle arrangement, nozzle distribution, number of nozzles, etc.

For the proposed engineering development model various modular rocket pack concepts were studied and the one selected is lighter in weight for a given load than either the conventional parachute system or the rocket pack that was previously used. A 12-position rocket pack was selected as the optimum number because it is the smallest number that can accomodate the greatest number of combinations of rockets with symmetry. Rocket packs with less than 12 positions cannot handle the smaller loads.

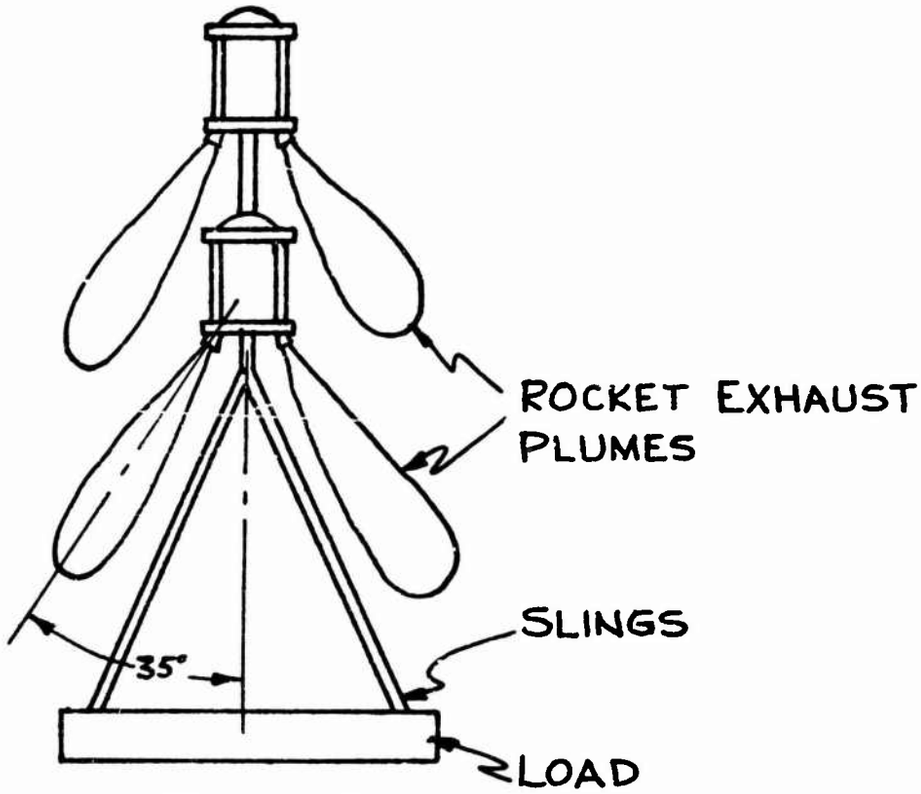

FIGURE 8. NORMAL FLAME PATTERN

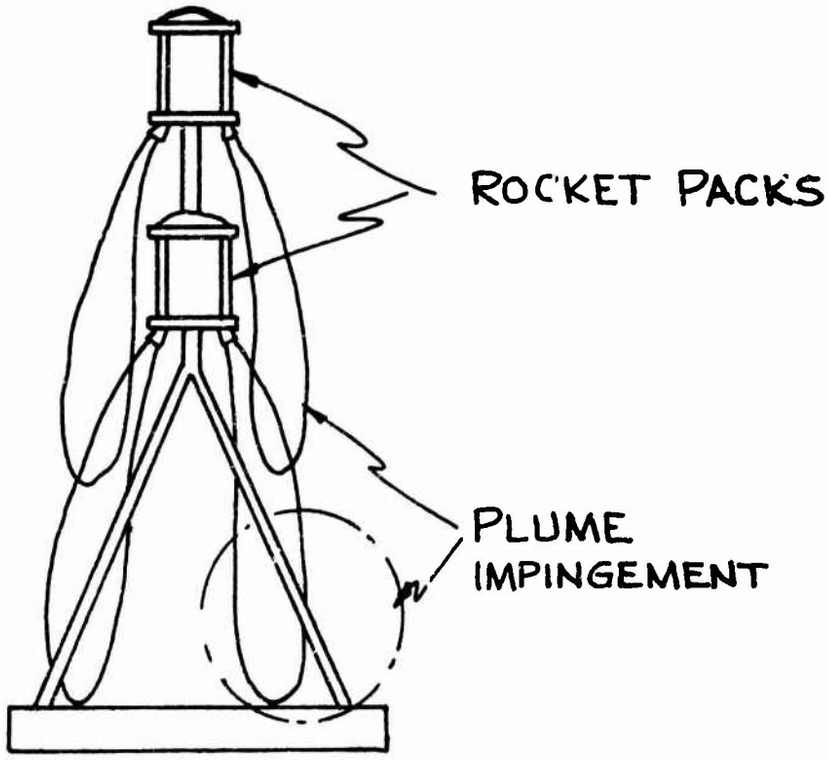

FIGURE 9. ABNORMAL FLAME PATTERN

7. Ground-Sensing System

After considerable testing and analysis of a redundant flexible probe ground sensor it was decided that this type of ground sensor had too many unsatisfactory characteristics such as vertical error caused by swinging of the probes, complexity of the mechanism, high maintenance and high cost.

A search for other approaches led to a study of several new methods. These included electrical/mechanical, acoustic altimeters, radar and optical ground-sensing systems.

The radar and optical altimeter systems seemed most promising. Because of cost/performance trade-offs the laser optical ground-sensing system was selected as the optimized ground-sensing device.

The optical ground-sensing device best meets the following considerations.

a. applicability

b. high reliability

c. availability

d. low cost

The optical ground sensor is a crossed beam system concept consisting of an optical transmitter and receiver units that provide an output when a predetermined distance from the ground has been reached.

The transmitter and receiver units are mounted in a support structure and attached to the load platform. The two units are at a fixed distance apart and the optical alignment between

the two units is rigidly maintained. The transmitter radiates emitted light energy and the receiver accepts light energy in a very narrow beam along its optical axis. The receiver accepts light energy only from sources inside a narrow tubular volume lying along the receiver optical axis. This tubular volume forms the receiver beam.

The angle between the beams is such that the transmitter beam and receiver beam intersect at a predetermined distance below the units. During an airdrop, when the intersection of the two beams reaches the ground, energy from the transmitter reflected by the ground is detected by the receiver and the opitcal ground sensor provides an output that actuates a solenoid valve driver.

Since it was late in the test program that the decision to use an optical ground sensing system was made, it was possible to demonstrate the use of this device only on one drop test. The results were satisfactory.

2. Economic Study.

The results of an economic study[7] indicate that it is more economical to use reloadable or refurbishable rocket system components then it is to use expendable ones. It is also more economical to use reuseable components (not requiring refurbishment) then it is to use refurbishable ones.

System simplification and optimum design of the prototype hardware has resulted in the following PRADS configuration:

a. One size modular rocket pack

b. One rocket pack for any load

c. Combinations of from two to ten 7250 lbs - sec rockets

d. One parachute size, without reefing

e. Combinations of from one to eight parachutes

f. Optical ground-sensing system

g. Electro-pneumatic rocket ignition system

Table II shows the estimated cost and rigged weight of PRADS vs. the standard parachute airdrop system for various loads. This cost estimate does not include the cost of the components that are common to both systems such as platforms, slings and tie downs. It should be noted that the cost of PRADS is comparable with the cost of a standard parachute system.

A study of this table also indicates that the rigged weight of PRADS is less than a standard parachute system for loads weighing from 8500 to 35,000 pounds.

9. 50,000 Pound PRADS

Figure 10 shows computer trajectories[6] for a 50,000-pound parachute retrorocket airdrop system covering a range of environmental conditions. Eight 64 ft. diameter parachutes that can withstand a cluster force of over 100,000 pounds and inflate in 4.25 seconds average (for the cluster of eight) are required. Special heavy duty parachutes with aerodynamic or ballistic

Load	Std Par. System Rigged Weight	PRADS Rigged Weight	Cost Std Par. Sys.*	Cost PRADS System			PRADS Configuration	
				New Rocket Motors	Cost to Refurbish Rocket Motors	Without Rocket Motors	No. Chutes 48'	No. Rockets
M-38 Truck	4180	4230	2204	-	-	2475	5	0
M-37 3/4 Ton Truck	7409	7789	2204	-	-	3960	8	0
Mass Load 4 A-22 Containers	6070	6340	2204	-	-	3465	7	0
M101 3/4 Ton Trailer	5030	5190	2204	-	-	2970	6	0
105MM Howitzer	8626	8530	3306	3706	338	-	2	2
M-274, 4 1/2 Ton Carriers	7160	7790	2204	-	-	3960	8	0
M-151 1/4 Ton Truck	3088	3278	1102	-	-	1980	4	0
M416 1/4 Ton Trailer	2520	2600	1102	-	-	1485	3	0
M35 2-1/2 Ton Truck	18,364	17,960	6612	6753	1014	-	3	6
3/4 Ton 4x4 Truck	11,947	11,794	4408	4839	507	-	3	3
2 762 MM Rockets	14,631	14,311	5510	5477	676	-	3	4
M113 APC	22,150	21.937	6612	7886	1183	-	4	7
M551 GS Vehicle	35,000	34,975	8816	11780	1690	-	8	10
Mass Load 1 A-22 Container	1962	2167	582	-	-	1485	3	0

*With new parachutes

Table 2. Estimated Cost and Rigged Weight of PRADS vs. Standard Parachute System

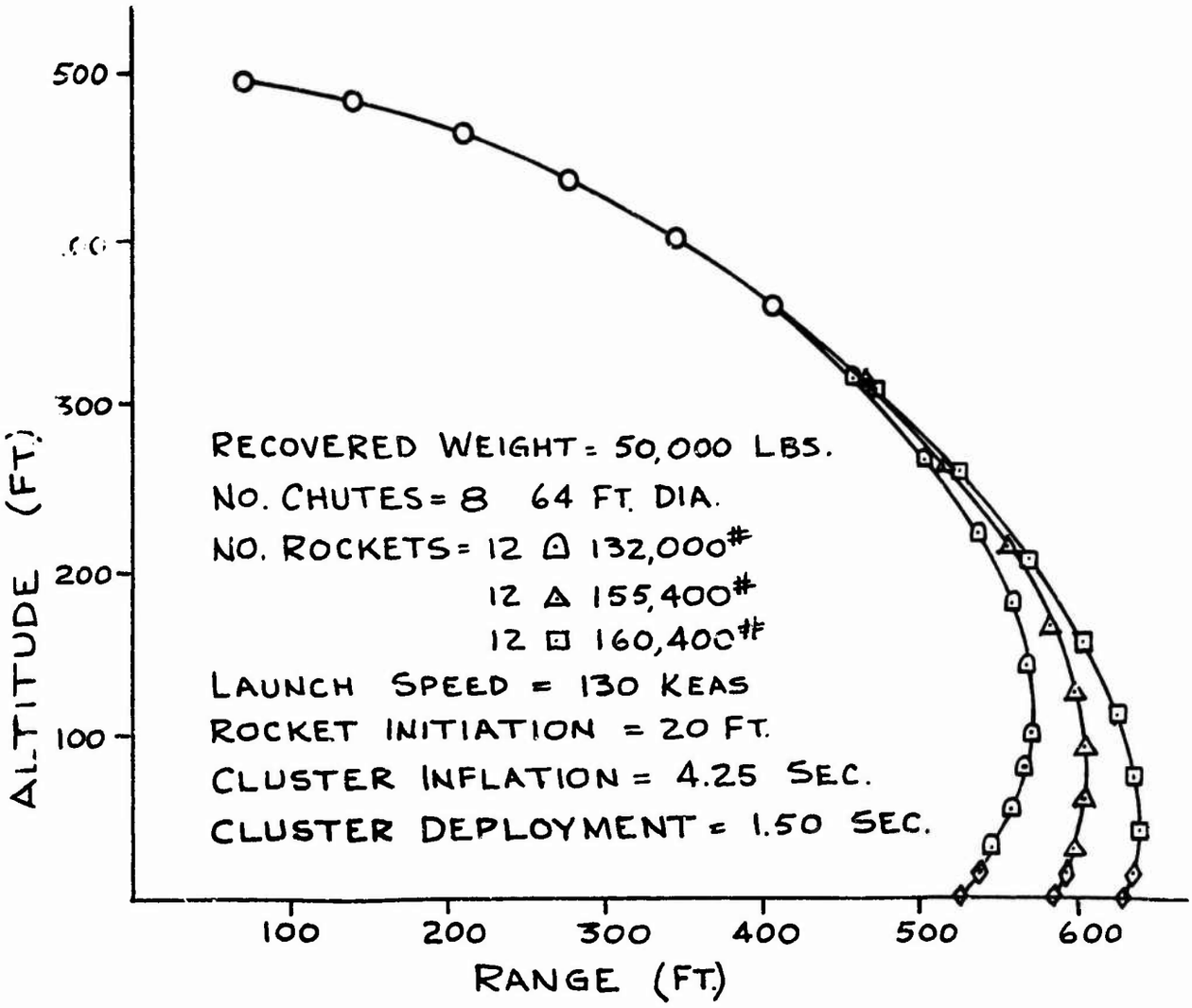

	V-TERMINAL	V-IMPACT
⌂ - 65°F, SEA LEVEL	47'/SEC	22'/SEC
△ STANDARD DAY	57	24
⊡ 100°F, 5000 FT.	65	28

◇ ROCKET IGNITION AT 20 FT.

◆ IMPACT

FIGURE 10. COMPUTER TRAJECTORIES FOR 50,000 POUND PRADS

inflation aids may be necessary. A parachute terminal velocity of 57 feet per second is expected for standard day conditions when the air density $\rho = .00238$ slugs/ft.^{3}.

Using the proposed rocket pack with 12 PRADS rocket motors, a 50,000 pound load will decelerate to an impact velocity of 24 feet per second.

PRADS design for loads over 50,000 pounds will require a stronger rocket pack and may possibly require larger rocket motors.

10. Conclusions.

The Parachute Retrorocket Airdrop System exploratory development programs have demonstrated the feasibility of a new concept by actually airdropping loads weighing from 3000 to 35,000 pounds at low altitudes. As a result of testing, study and analysis, a proposed PRADS engineering development model has been created with the capability of airdropping loads weighing up to 35,000 pounds and the possible extension of its capability to airdropping loads weighing up to 50,000 pounds.

It is concluded that a parachute retrorocket recovery system is particularly feasible for the recovery of airdrop loads and may prove to be the only practical system for heavy loads, especially if low altitude is a requirement.

References

1. Litz, C.J. Jr., "Propellant Actuated Device (PAD) Assisted Parachute System for Aerial Delivery of Cargo", Frankford Arsenal, Philadelphia, Pa, Report R-1671, March 1963, US Army Natick Laboratories Project Order OMREC-62-53 dated 24 July 1961.

2. Shannon, C.W., "Ground Proximity Aerial Delivery System - Design Study (Final Report)", Stanley Aviation Corp. Denver, Colorado and Stencel Aero Engineering Corp., Asheville, North Carolina, Jan. 1963, US Army Natick Laboratories Contract No. DA19-129-QM-2055.

3. "An Engineering Evaluation Test of the Rocket Assist Parachute System for Airdrop of Cargo (Phase II - Live Rockets)", USATECOM Project No. 4-3-7270-01 ATA Project No. 63044 YTS Report 3054, Yuma Test Station, Yuma, Arizona, August 1963.

4. White, E.L., Bronn, E., and Sturgeon, R.F., Lockheed-Georgia Company, "Study of Heavy Equipment Aerial Delivery and Retrieval Techniques", US Air Force Flight Dynamics Laboratory Technical Report No. AFFDL-TR-66-97, January 1967.

5. Michal, J.L., "Final Engineering Report - Ground Proximity Airdrop System", Stencel Aero Engineering Corporation, September 1963, US Army Natick Laboratories Contract No. DA19-129-AMC-502(N).

6. Chakoian, G., and Michal, J.L., "A Parachute Retrorocket System for Low Altitude Airdrop of Cargo and Other Special Applications", American Institute of Aeronautics and Astronautics Paper No. 68-956 (1968) presented at AIAA 2nd Aerodynamic Deceleration Systems Conference, El Centro, Calif., September 1968.

7. Michal, J.L., Oates, J.L., and Martinez, A.L., "Parachute Retrorocket Airdrop System PRADS Technical Integration and Evaluation Input Data", Stencel Aero Engineering Corporation, June 1969, US Army Natick Laboratories Contract No. DAAG17-68-C-0019.

Unclassified
Security Classification

DOCUMENT CONTROL DATA - R & D

(Security classification of title, body of abstract and indexing annotation must be entered when the overall report is classified)

1. ORIGINATING ACTIVITY *(Corporate author)*

US Army Natick Laboratories
Natick, Mass.

2a. REPORT SECURITY CLASSIFICATION

Unclassified

2b. GROUP

3. REPORT TITLE

A Parachute Retrorocket Recovery System for Airdrop of Heavy Loads

4. DESCRIPTIVE NOTES *(Type of report and inclusive dates)*

5. AUTHOR(S) *(First name, middle initial, last name)*

George Chakoian

6. REPORT DATE

November 1969

7a. TOTAL NO. OF PAGES

26

7b. NO. OF REFS

7

8a. CONTRACT OR GRANT NO.

b. PROJECT NO. 1F162203D19 (

c.

d.

9a. ORIGINATOR'S REPORT NUMBER(S)

70-34-AD

9b. OTHER REPORT NO(S) *(Any other numbers that may be assigned this report)*

10. DISTRIBUTION STATEMENT

This document has been approved for public release and sale; its distribution is unlimited.

11. SUPPLEMENTARY NOTES

12. SPONSORING MILITARY ACTIVITY

US Army Natick Laboratories
Natick, Mass. 01760

13. ABSTRACT

This report presents the results of a very recent in-depth exploratory development study of a parachute retrorocket recovery system for the airdrop of cargo loads weighing up to 50,000 pounds and the results of actual drop tests of loads weighing from 3000 to 35,000 pounds.

This study indicates that a parachute retrorocket recovery system is particularly feasible for the recovery of airdrop loads and may prove to be the only practical system for heavy loads, especially if low altitude is a requirement.

DD FORM 1 NOV 65 1473 REPLACES DD FORM 1473, 1 JAN 64, WHICH IS OBSOLETE FOR ARMY USE.

Unclassified
Security Classification

Unclassified

Security Classification

14. KEY WORDS	LINK A ROLE	LINK A WT	LINK B ROLE	LINK B WT	LINK C ROLE	LINK C WT
Deceleration	8					
Payloads	9					
Aerial delivery	9					
Parachutes	10					
Retrorockets	10					
Airdrop operations	4					

Unclassified

Security Classification