AD699126

TM-4023/006/00

Distribution Of This Document Is Unlimited

National Data Program for the Marine Environment

CLEARINGHOUSE

Technical Development Plan

D D C
RECEIVED
JAN 19 1970
B

Volume Two Final Report

July 31, 1969

This document has been approved for public release and sale; its distribution is unlimited.

FAST ANNOUNCEMENT COPY:

AD_____--NATIONAL DATA PROGRAM FOR THE MARINE ENVIRONMENT, with Technical Development Plan, Volumes I and II, Final Report, System Development Corporation, Santa Monica, California, for the National Council on Marine Resources and Engineering Development, Executive Office of the President, July 31, 1969 . . . Recommends National Data Program for the Marine Environment, projecting on an agency-by-agency and marine program basis the increased funds and other resources required to upgrade the quality of the more important marine data management activities and other services.

* * *

TM-4023/006/00

TECHNICAL MEMORANDUM

(TM Series)

This document was produced by SDC in performance of contract N00014-67-C-0559

NATIONAL DATA PROGRAM
FOR THE MARINE ENVIRONMENT

TECHNICAL DEVELOPMENT PLAN

FINAL REPORT

VOLUME TWO

July 31, 1969

SYSTEM
DEVELOPMENT
CORPORATION
2500 COLORADO AVE.
SANTA MONICA
CALIFORNIA
90406

This study was sponsored by the National Council on Marine Resources and Engineering Development under Office of Naval Research Contract Number N00014-67-C-0559 and Contract Authority Identification Number ONR-620:FDB.

Distribution of this document is unlimited

A-1159 4/65

VOLUME TWO

TABLE OF CONTENTS

		Page
I.	EXECUTIVE SUMMARY	I- 1
	IMPROVING MARINE DATA MANAGEMENT	I- 1
	MAJOR RECOMMENDATIONS	I- 9
II.	OBJECTIVES, SCOPE, AND METHODOLOGY	II- 1
III.	SUMMARY OF THE TECHNICAL DEVELOPMENT PLAN	III- 1
	AGENCY AND PROGRAM DEVELOPMENT PLANS	III- 1
	TECHNICAL DEVELOPMENT PLAN COSTS	III-14
	MARINE DATA NETWORK DEVELOPMENT PLANS	III-22
IV.	AGENCY DEVELOPMENT PLANS - GREAT LAKES AND COASTAL DEVELOPMENT	IV- 1
	LAKE SURVEY AND GREAT LAKES DATA CENTER	IV- 1
	COASTAL ENGINEERING RESEARCH CENTER	IV-11
	NAVAL OCEANOGRAPHIC OFFICE	IV-17
	COAST AND GEODETIC SURVEY	IV-32
	U.S. GEOLOGICAL SURVEY	IV-46
	MARINE FORECASTING, RESEARCH, AND SUPPORT	IV-55
	WEATHER BUREAU OFFICES	IV-55
	FLEET NUMERICAL WEATHER CENTRAL AND NATIONAL METEOROLOGICAL CENTER	IV-63
	NATIONAL ENVIRONMENTAL SATELLITE CENTER	IV-74
	FISHERIES	IV-83
	FEDERAL WATER POLLUTION CONTROL ADMINISTRATION	IV-93
	ONSHORE BUOY DATA MANAGEMENT - U.S. COAST GUARD	IV-101
	NATIONAL DATA CENTERS	IV-113
	NATIONAL WEATHER RECORDS CENTER	IV-132
	SMITHSONIAN OCEANOGRAPHIC SORTING CENTER	IV-142
V.	MARINE DATA NETWORK DEVELOPMENT PLANS	V- 1
APPENDIX		1

LIST OF ILLUSTRATIONS

Figure		Page
I-1	PARTICIPANTS IN MARINE SCIENCES	I- 3
I-2	MARINE SCIENCES INFORMATION MANAGEMENT	I- 6
IV-1	LAKE SURVEY SYSTEM	IV- 9
IV-2	WAVE AND OTHER ENVIRONMENTAL DATA ACQUISITION AND PROCESSING SYSTEM COASTAL ENGINEERING CENTER AND WEATHER BUREAU	IV-12
IV-3	NAVOCEANO SHORE-BASED SYSTEM PRIORITY DATA AND PRODUCT PROCESSING	IV-21
IV-4	NAVOCEANO SYSTEM	IV-25
IV-5	COAST AND GEODETIC SURVEY SYSTEM	IV-40
IV-6	WAVE AND OTHER ENVIRONMENTAL DATA ACQUISITION AND PROCESSING SYSTEM COASTAL ENGINEERING RESEARCH CENTER AND WEATHER BUREAU	IV-57
IV-7	RELATIONSHIP BETWEEN NUMBER OF DEEP OCEAN BUOYS AND FREQUENCY OF DAILY REPORTING WHEN ALL AVAILABLE TIME IS USED FOR TRANSMISSION	IV-106
IV-8	BUOY DATA SYNOPTIC AND TIME SERIES CORRELATION	IV-108
IV-9	METHOD OF STORING OCEANOGRAPHIC DATA ON DISK STORAGE	IV-118

Table		Page
I- 1	COSTS FOR COMMISSION RECOMMENDATIONS.	I- 4
III- 1	TECHNICAL DEVELOPMENT PLAN (PLAN C) SUMMARY OF PRIORITY PRODUCTS - SERVICE, DATA BASE AND DATA ACQUISITION REQUIREMENTS, FY 70-81	III- 3
III- 2	SUMMARY OF TECHNICAL DEVELOPMENT PLAN (PLAN C) TEN YEAR INCREMENTAL AND TOTAL COSTS	III-15
III- 3	COMPUTATION OF INCREASE IN 10-YEAR FUNDING REQUIRED TO IMPLEMENT TECHNICAL DEVELOPMENT PLAN	III-16
III- 4	ALLOCATION OF TEN-YEAR INCREMENTAL COSTS TO PROGRAM AREAS.	III-21
IV- 1	LAKE SURVEY AND GREAT LAKES REGIONAL DATA CENTER - GREAT LAKES PRIORITY PRODUCTS AND DATA	IV- 3
IV- 2	LAKE SURVEY AND GREAT LAKES REGIONAL DATA CENTER EXAMPLES OF GREAT LAKES PRIORITY DATA BASES	IV- 5
IV- 3	TECHNICAL DEVELOPMENT PLAN SPECIFICATION - LAKE SURVEY AND GREAT LAKES DATA CENTER SYSTEM - PRIORITY PRODUCTS AND DATA - NEW HARDWARE, SOFTWARE AND COMPUTER OPERATIONS REQUIREMENTS	IV- 6
IV- 4	TECHNICAL DEVELOPMENT PLAN SPECIFICATION - LAKE SURVEY AND GREAT LAKES DATA CENTER SYSTEM - PRIORITY PRODUCTS/ DATA FUTURE REQUIREMENTS FOR EXISTING ORGANIZATION COMPONENTS	IV- 7
IV- 5	DATA PROCESSING HARDWARE SPECIFICATION AGENCY: LAKE SURVEY AND GREAT LAKES REGIONAL DATA CENTER	IV-10
IV- 6	TECHNICAL DEVELOPMENT PLAN SPECIFICATION - COASTAL ENGINEERING RESEARCH CENTER SYSTEM - PRIORITY PRODUCTS AND DATA - NEW HARDWARE, SOFTWARE AND COMPUTER OPERATIONS REQUIREMENTS	IV-14
IV- 7	DATA PROCESSING HARDWARE SPECIFICATION AGENCY: COASTAL ENGINEERING RESEARCH CENTER	IV-15
IV- 8	NAVOCEANO SYSTEM PRIORITY PRODUCTS AND DATA	IV-18
IV- 9	TECHNICAL DEVELOPMENT PLAN SPECIFICATION - NAVOCEANO SHORE-BASED SYSTEM PRIORITY PRODUCTS/DATA - NEW HARDWARE, SOFTWARE AND COMPUTER OPERATIONS REQUIREMENTS .	IV-22
IV-10	TECHNICAL DEVELOPMENT PLAN SPECIFICATION - NAVOCEANO SHORE-BASED SYSTEM FUTURE PERSONNEL REQUIREMENTS FOR EXISTING ORGANIZATION COMPONENTS PRIORITY PRODUCTS AND DATA	IV-24

Table		Page
IV-11	DATA PROCESSING HARDWARE SPECIFICATION AGENCY - NAVOCEANO SHORE-BASED SYSTEM	IV-26
IV-12	TECHNICAL DEVELOPMENT PLAN SPECIFICATION - NAVOCEANO SHIPBOARD ACQUISITION AND PROCESSING SYSTEMS - PRIORITY PRODUCTS AND DATA - NEW HARDWARE, SOFTWARE AND COMPUTER OPERATING REUQIREMENTS	IV-28
IV-13	TECHNICAL DEVELOPMENT PLAN NAVOCEANO TOTAL BUDGETS FOR PRIORITY DATA AND PRODUCTS	IV-30
IV-14	DATA PROCESSING HARDWARE SPECIFICATION - NAVOCEANO SHIPBOARD COMPUTER SYSTEMS	IV-31
IV-15	COAST AND GEODETIC SURVEY SYSTEM - PRIORITY PRODUCTS AND DATA	IV-33
IV-16	COAST AND GEODETIC SURVEY SYSTEM PRIORITY PRODUCTS AND DATA	IV-35
IV-17	TECHNICAL DEVELOPMENT PLAN SPECIFICATION - COAST AND GEODETIC SURVEY SHORE-BASED SYSTEM - PRIORITY PRODUCTS AND DATA - NEW HARDWARE, SOFTWARE AND COMPUTER OPERATIONS REQUIREMENTS	IV-37
IV-18	TECHNICAL DEVELOPMENT PLAN SPECIFICATION - COAST AND GEODETIC SURVEY SHORE-BASED SYSTEM PRIORITY PRODUCTS AND DATA FUTURE PERSONNEL REQUIREMENTS FOR EXISTING ORGANIZATION COMPONENTS	IV-38
IV-19	DATA PROCESSING HARDWARE SPECIFICATION - AGENCY: COAST AND GEODETIC SURVEY SHORE-BASED SYSTEM	IV-41
IV-20	TECHNICAL DEVELOPMENT PLAN SPECIFICATION - COAST AND GEODETIC SURVEY SHIPBOARD DATA ACQUISITION AND PROCESSING - NEW HARDWARE, SOFTWARE AND COMPUTER OPERATIONS REQUIREMENTS	IV-42
IV-21	TECHNICAL DEVELOPMENT PLAN COAST AND GEODETIC SURVEY TOTAL BUDGETS FOR PRIORITY DATA AND PRODUCTS	IV-43
IV-22	DATA PROCESSING HARDWARE SPECIFICATION - COAST AND GEODETIC SURVEY - SHIPBOARD COMPUTER SYSTEMS	IV-44
IV-23	PROPOSED IMPLEMENTATION SCHEDULE - PRIORITY PRODUCTS AND DATA U.S. GEOLOGICAL SURVEY	IV-48
IV-24	TECHNICAL DEVELOPMENT PLAN SPECIFICATION - U.S. GEOLOGICAL SURVEY - PRIORITY PRODUCTS AND DATA	IV-51

Table		Page
IV-25	PRIORITY PRODUCTS - WEATHER BUREAU OFFICE RESPONSIBILITIES	IV-56
IV-26	TECHNICAL DEVELOPMENT PLAN SPECIFICATION - WEATHER BUREAU OFFICES PRIORITY PRODUCTS AND DATA - NEW HARDWARE, SOFTWARE AND COMPUTER OPERATIONS REQUIREMENTS . .	IV-58
IV-27	TECHNICAL DEVELOPMENT PLAN SPECIFICATION - WEATHER BUREAU OFFICES PRIORITY PRODUCTS AND DATA	IV-60
IV-28	DATA PROCESSING HARDWARE SPECIFICATION - AGENCY: WEATHER BUREAU	IV-62
IV-29	SUMMARY OF FNWC (NAVAL WEATHER SERVICE LEAD AGENCY) AND NMC (ESSA LEAD AGENCY) PROPOSED IMPLEMENTATION SCHEDULE - MARINE DATA ACQUISITION, TRANSMISSION AND PROCESSING	IV-68
IV-30	FNWC (NAVAL WEATHER SERVICE LEAD AGENCY) AND NMC (ESSA LEAD AGENCY) PROPOSED IMPLEMENTATION SCHEDULE - MARINE DATA ACQUISITION TRANSMISSION AND PROCESSING	IV-69
IV-31	TECHNICAL DEVELOPMENT PLAN SPECIFICATIONS - MARINE DATA ACQUISITION, TRANSMISSION AND PROCESSING - FNWC (NAVAL WEATHER SERVICE LEAD AGENCY) AND NMC (ESSA LEAD AGENCY) . .	IV-71
IV-32	RECOMMENDED ALLOCATION OF MARINE DATA ACQUISITION, TRANSMISSION AND PROCESSING FUNDS BETWEEN NAVY AND ESSA . .	IV-72
IV-33	NATIONAL ENVIRONMENTAL SATELLITE CENTER PROPOSED IMPLEMENTATION SCHEDULE - PRIORITY PRODUCTS AND DATA . . .	IV-80
IV-34	TECHNICAL DEVELOPMENT PLAN SPECIFICATION - NATIONAL ENVIRONMENTAL SATELLITE CENTER MARINE DATA AND PRODUCTS . .	IV-82
IV-35	PROPOSED SCHEDULE OF IMPLEMENTATION OF DATA ACQUISITION COMMUNICATION AND PROCESSING FOR IMPROVED FISHERY PRODUCTS - BUREAU OF COMMERCIAL FISHERIES (BCF) AND BUREAU OF SPORT FISHERIES AND WILDLIFE (BSF&W)	IV-84
IV-36	EQUIPMENT REQUIREMENTS - BUREAU OF COMMERCIAL FISHERIES AND BUREAU OF SPORT FISHERIES AND WILDLIFE - PRIORITY DATA AND PRODUCTS.	IV-87
IV-37	EQUIPMENT COST SUMMARY - BUREAU OF COMMERCIAL FISHERIES AND BUREAU OF SPORT FISHERIES AND WILDLIFE - PRIORITY DATA AND PRODUCTS.	IV-88

Table		Page
IV-38	TECHNICAL DEVELOPMENT PLAN SPECIFICATION - BUREAU OF COMMERCIAL FISHERIES AND BUREAU OF SPORT FISHERIES AND WILDLIFE - PRIORITY DATA AND PRODUCTS - NEW HARDWARE, SOFTWARE AND COMPUTER OPERATIONS REQUIREMENTS .	IV- 90
IV-39	TECHNICAL DEVELOPMENT PLAN SPECIFICATION - BUREAU OF COMMERCIAL FISHERIES AND BUREAU OF SPORT FISHERIES AND WILDLIFE - APPLICATIONS PERSONNEL - PRIORITY PRODUCTS AND DATA	IV- 92
IV-40	FEDERAL WATER POLLUTION CONTROL ADMINISTRATION PROPOSED IMPLEMENTATION SCHEDULE - PRIORITY PRODUCTS AND DATA	IV- 96
IV-41	TECHNICAL DEVELOPMENT PLAN SPECIFICATIONS - FEDERAL WATER POLLUTION CONTROL ADMINISTRATION	IV-100
IV-42	NATIONAL DATA BUOY SYSTEM - KEY STATISTICS	IV-102
IV-43	RELATIONSHIP OF NUMBER OF BUOYS TO REPORTING FREQUENCY WHEN ALL AVAILABLE TIME IS USED FOR DATA TRANSMISSION .	IV-104
IV-44	U.S. COAST GUARD - PROPOSED SCHEDULE OF TECHNICAL DEVELOPMENT PLAN IMPLEMENTATION - NATIONAL DATA BUOY SYSTEM - ONSHORE BUOY DATA MANAGEMENT	IV-111
IV-45	TECHNICAL DEVELOPMENT PLAN SPECIFICATION - U.S. COAST GUARD NATIONAL DATA BUOY SYSTEM - ONSHORE BUOY DATA MANAGEMENT	IV-112
IV-46	NATIONAL OCEANOGRAPHIC DATA CENTER DATA BASE VOLUMES AND INPUT RATES	IV-114
IV-47	TECHNICAL DEVELOPMENT PLAN SPECIFICATION - NATIONAL OCEANOGRAPHIC DATA CENTER	IV-125
IV-48	ENVIRONMENTAL DATA SERVICE - NATIONAL WEATHER RECORDS CENTER PROPOSED IMPLEMENTATION SCHEDULE - PRIORITY PRODUCTS AND DATA	IV-140
IV-49	TECHNICAL DEVELOPMENT PLAN - ENVIRONMENTAL DATA SERVICE NATIONAL WEATHER RECORDS CENTER - PRIORITY PRODUCTS AND DATA	IV-141
IV-50	METHOD OF TAXA HIERARCHY CODING	IV-148

(Page viii blank)

Table		Page
IV-51	SMITHSONIAN OCEANOGRAPHIC SORTING CENTER - A METHOD OF TAXA CATALOG DATA BASE CODING	IV-149
IV-52	SMITHSONIAN OCEANOGRAPHIC SORTING CENTER - PROPOSED IMPLEMENTATION SCHEDULE	IV-150
IV-53	TECHNICAL DEVELOPMENT PLAN SPECIFICATIONS - SMITHSONIAN OCEANOGRAPHIC SORTING CENTER	IV-152

EXECUTIVE SUMMARY

IMPROVING MARINE DATA MANAGEMENT

The United States has a new mandate for the expansion of ocean related activities. The Marine Resources and Engineering Development Act of 1966 (PL 89-454) calls on the President to develop a comprehensive, long range, and coordinated national program in marine science with the assistance of a National Council on Marine Resources and Engineering Development, and an advisory Commission on Marine Science, Engineering, and Resources. The Council is composed of the Vice President of the United States, who serves as Chairman, five members of the President's Cabinet, and three heads of other Federal agencies. It has statutory responsibility to advise and assist the President in policy planning and the coordination of marine science affairs.

The new marine sciences policy is unprecedented in its breadth. It continues the quest for scientific knowledge of the marine environment but marks a significant transition toward applications through strengthening ocean engineering and marine resource development to:

- Contribute to national security
- Enhance commerce and transportation
- Rehabilitate domestic fisheries and increase the harvest from the sea
- Develop seashore resources and reduce pollution of the Great Lakes, bays, estuaries, and nearshore waters
- Improve forecasting of weather and ocean conditions
- Supplement continental sources of oil, gas, and minerals
- Promote international understanding and cooperation through use of the oceans

The marine science effort, reinforced by many scientific and engineering disciplines and technologies, involves a wide diversity of institutions, including Federal departments and agencies, committees of the Congress,

major U.S. industries, and numerous State, regional, and international organizations. (See Figure 1 for Participants in Marine Sciences.) Private sector participants include many of our universities and maritime, construction, chemical, electronics, aerospace, mineral, oil, fishing, recreational, and other industries. One significant purpose of the Act is to achieve a creative and cooperative partnership among the government, business, academic scientific, and engineering communities.

The 1966 Act recognizes that an expanded and coordinated national ocean program can contribute to achieving major national goals. A vigorous program of marine research, development and exploitation has thus been launched to ensure that the bountiful resources of the sea contribute to solving man's increasing needs for food, water, minerals, and energy. The new national policy will accelerate the conversion of the relatively unfulfilled promise of the sea to nationwide benefits.

Federal support for marine R&D has increased from $438 million in FY 1967 to $528 million in the President's budget for FY 1970, and is the fastest growing sector of the Federal R&D budget. In January, 1969, the Marine Sciences Commission recommended an $8 billion investment in civil-oriented marine science activities during the next decade. The sharp upward projections of funding for marine science affairs is depicted in Table 1. At this stage of its development, and for the next ten years, marine science programs will be primarily data and information oriented. There will thus be accelerating needs and opportunities for new and improved data management systems and services.

Vast quantities of marine-oriented information are required to support virtually all purposes of marine science and technology. These include:

- Environmental data--real-time and archival--concerning the nature of the oceans and the interactions of man's activities with the marine environment.

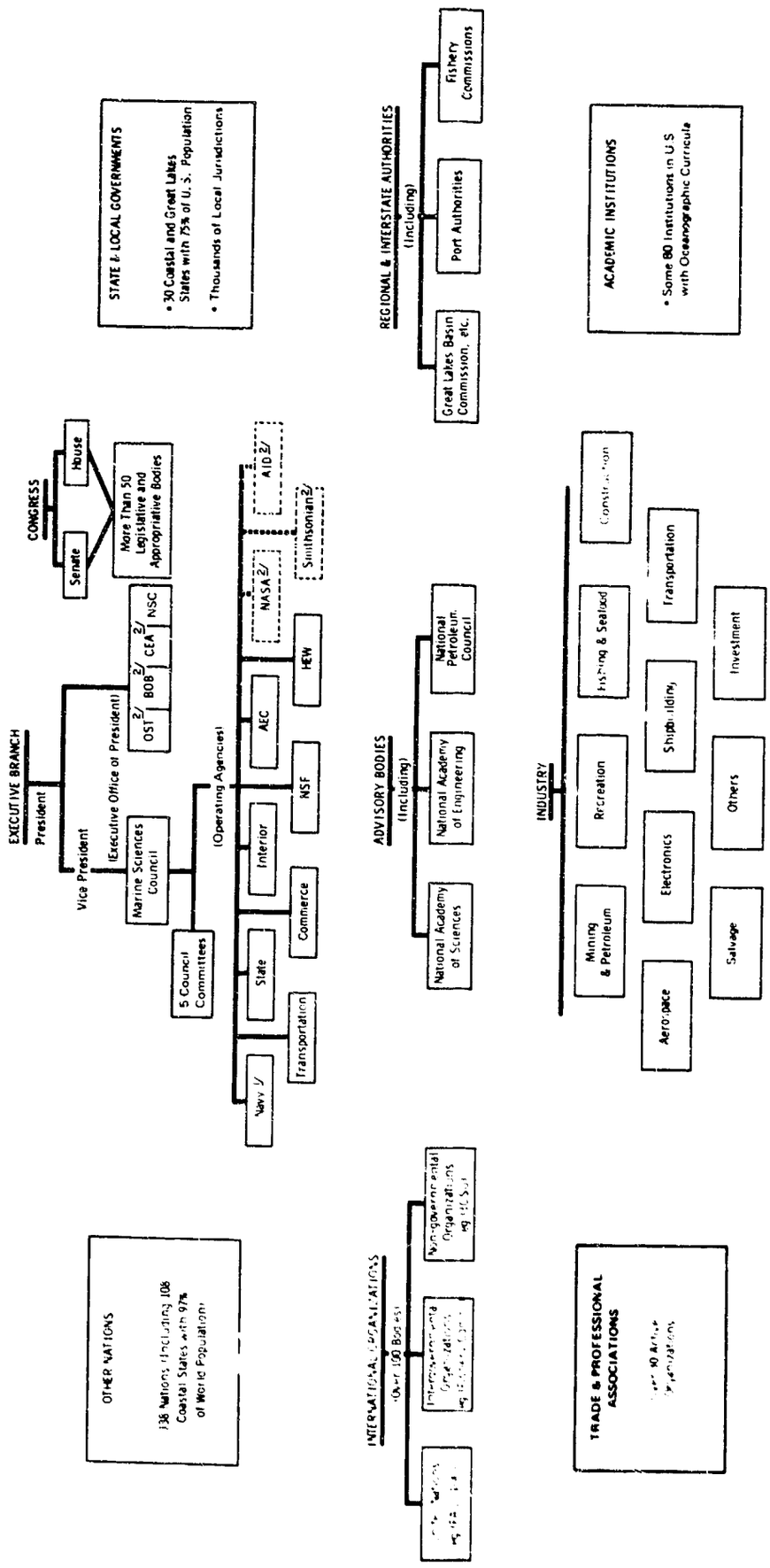

FIGURE I-1. PARTICIPANTS IN MARINE SCIENCES

TABLE I

COSTS FOR COMMISSION RECOMMENDATIONS (BY ACTIVITY)*

(Incremental Costs in $ Millions)

Activity	Average Annual Costs 1971-1975	Average Annual Costs 1976-1980	10-Year Total Costs
All Commission Recommendations	652	948	8,000
Management and Operations	62	70	660
Research and Education	142	226	1,840
Specific Technology Programs	124	182	1,530
National Projects	160	215	1,875
Fundamental Technology	130	210	1,700
Mapping, Charting, and Surveying	34	45	395

*These Commission recommendations reflect only Federal nondefense programs. The Defense segment is expected to grow at a slightly higher rate during the projected periods.

- Bibliographic and documentation information.
- Program management and budget information about past, present and projected activities.
- Statistical, economic and demographic information concerning man's activities that impinge on or are affected by marine operations.

Many data requirements as well as data collection and distribution needs are common to numerous organizations, both Federal and non-Federal. Producers and users of data now include more than 30 bureaus in 15 Federal departments; 30 coastal and Great Lakes State governments concerned with developing and regulating the use of marine resources; 250 Federal, State, academic and private laboratories involved in marine research and engineering development;

1,100 merchant ships; an ever-increasing number of offshore oil and mineral operations; several million sport and commercial fishermen; tens of thousands of Navy men in our fleets; and more than 7,000 scientists, engineers, specialists, technicians and others engaged in marine research and development activities. Each is concerned with obtaining marine data or data products and services to meet his own particular needs. The problem of responding to these needs is illustrated in Figure 2.

Advances in marine science and technology depend critically upon the effective flow of information--from data collectors to data consumers. Today, with broader ocean-related activities and with data acquisition more complex and costly, the data commodity must be shared among a larger number of participants. More efficient recording, archival, processing and distribution systems are needed to provide information services not only for the oceanographic community, but beyond it to a larger community of State and industrial users, and public and private interests concerned with maritime policy and economic development. If we are to understand the complex nature of the marine environment and if understanding is to foster achievement of practical national goals, information must both be generated and made available to meet a wide variety of user needs.

Apart from increases in the size and complexity of the data community, increases in data traffic and changes in the character of data impose new problems in data management. The advent of simultaneous measurements at numerous locations and the evolution of requirements to monitor the marine environment with ocean data buoys and spacecraft sharply increase the sheer quantity of information to handle. The complexity of marine data management can be illustrated by the variety of observable quantities and the diversity of their sources and end-uses. Data are obtained from the world oceans, coastal waters, estuaries, and Great Lakes by:

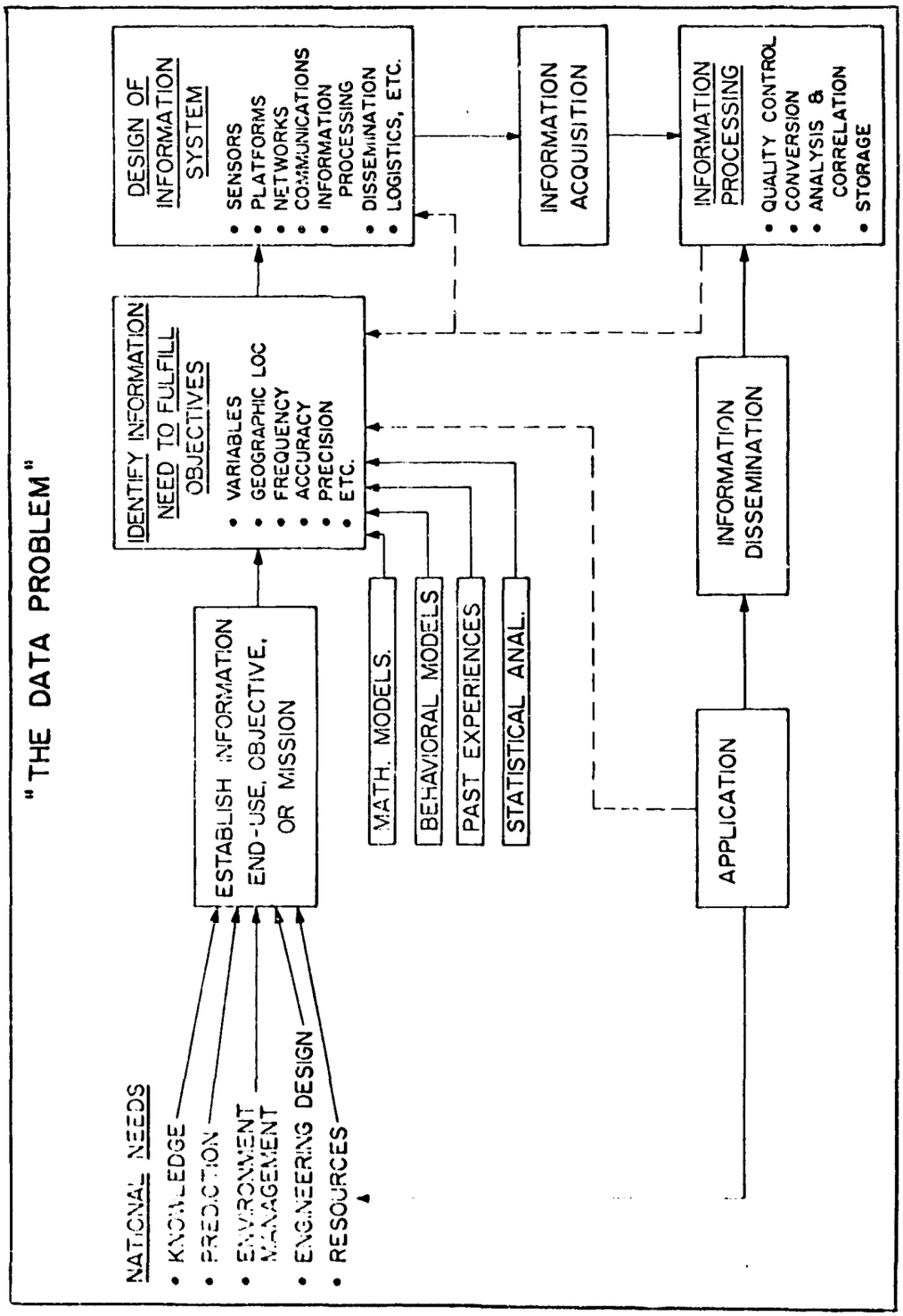

FIGURE 2. MARINE SCIENCES INFORMATION MANAGEMENT[1]

[1]The first report of the President to the Congress on Marine Resources and Engineering Development, January 1967.

- Research and survey ships, offshore platforms, submersibles, and divers.
- Ships of opportunity in the merchant marine, Navy, Coast Guard, and commercial fisheries.
- Spacecraft, aircraft, and buoys.

Data may be real time or archival; may be presented in the form of maps, documents, visual displays, analog or digital records; and may consist of sea water, biological or geological samples. Exploration of the oceans has not always been fully coordinated and agreement within the marine sciences community as to data handling procedures and standards has not been broadly achieved. Meanwhile, technology makes it possible to accumulate data at a vastly faster rate. Data users are thus frequently unaware of existing sources, and are unable to retrieve needed data quickly in a readily usable form. In other cases, data may be deliberately rejected because of doubts of its validity. These problems demonstrate the needs of all sectors of the marine science community. Innovative data management programs can be developed for their solution.

Several Federal data centers have been established to meet a demand for improved data services. These facilities almost immediately became inadequate as the result of inadequate funds as well as insufficient national data bases, incompatible data formats for efficient exchange, delays in filing, archaic processing and communication methods, and lack of critical evaluation. An increasingly serious problem for the future is how to manage an even larger volume and diversity of marine data which are certain to result from intensified activities and new technologies. Effective data services that afford prompt and reliable dissemination should be developed to match the speed and sophistication of data acquisition if the benefits of new technologies are to be realized. Such services must be planned not only for the present but for the next ten years.

The System Development Corporation, under contract to the Marine Sciences Council, is submitting this report on a recommended National Data Program for the Marine Environment, projecting on an agency-by-agency and marine program basis the increased funds and other resources required to upgrade the quality of the more important marine data management activities and other services, commensurate with the expanded program proposed by the President's Commission.

The sphere of Federal marine data management activities is vast and the time is ripe for providing the catalyst required to accelerate its orderly development. It is hoped that the SDC report will provide this catalytic effect and dictate the future success of marine data management affairs within the Federal Government.

MAJOR RECOMMENDATIONS

The purpose of this section is to provide a summary of the major recommendations which have been developed during the course of the project. These recommendations are based on detailed analyses and findings presented in the body of the report. The recommendations are presented here for the convenience of the reader who wishes to capture the principal issues which carry policy implications for future action.

These recommendations are based on the general conclusion that the nation is not getting full value from the marine data which have been collected and continue to be collected in ever greater volume. Budgets for data preparation, storage, retrieval and analysis are consistently assigned low priority. National data centers do not have the equipment or personnel to provide desired services. Ocean observations may be duplicated through lack of knowledge about available data sources and holdings. Data collected from many research expeditions or development programs are often communicated to the national data archives reluctantly, late, or not at all. Recognition of this situation, and corroboration of this conclusion, is found in the reports published in accordance with the Marine Resources and Engineering Development Act of 1966 (Public Law 89-454), which established the National Council on Marine Resources and Engineering Development, and the Commission on Marine Science, Engineering and Resources.

We therefore consider it of urgent national priority to adopt technical improvement programs in the principal marine data service organizations, to strengthen the capabilities of national data centers, and to tighten the Federal administrative machinery relating to the marine data network. These actions will significantly increase the value of marine data to the many user groups who comprise the constituency of marine science activities, and

enhance the United States' position in the international marine science community.

Recommendation: Authorize prompt implementation of the Technical Development Plan.

The Technical Development Plan (TDP) for a National Data Program for the Marine Environment is summarized in Chapter VII, and elaborated in Volume II of the report. It specifies product improvements, new products, data requirements, and implementation requirements for each major Federal marine data service organization for the ten-year period Fiscal Year 1971-1980. A minimum investment in needed product improvements over this period will require an estimated incremental cost to the government of $184 million above present levels (Plan A). Implementation of a plan for product improvements, new products and improved user services will require an estimated incremental cost over the ten-year period of $372 million above present levels (Plan B). Implementation of the recommended complete plan for product improvements, new products and services and new data acquisition networks will require an estimated incremental cost over the ten-year period of $496 million above present levels (Plan C).

Implementation of the recommended complete TDP will produce vitally needed upgrading of existing marine data products and services, and development of capabilities for improved systems for future data management and product preparation. In addition, the TDP includes recommendations for funds to support developmental planning of data management capabilities in the national data centers so that more powerful and responsive services may be provided to the expanding user community. Data centers must attract and retain first class data managers. The expenditure of funds for these purposes will return benefits to marine sciences and the user community at large that will far outweight the dollar cost, and will improve the currently inadequate capabilities for exploitation and dissemination of data in order that balance be achieved with necessary increases in data collection. In the

event that additional monies are not allocated to the marine data management, it is essential that this field be strengthened by the reprogramming of authorized appropriations to the Federal agencies.

Among the major technical recommendations of the TDP are the following:

1. Jointly between the Federal government and the States, develop a new unclassified product, a nearshore coastal zone atlas, or coastal atlas, consisting of information on climate, recreational facilities, geography, coastal developments, fishery statistics, landmarks, hazards to navigation, geological features, and marine environmental and bathymetric data. (See TDP-C&GS.)

2. Undertake the development of new satellite products which combine digital meteorological data with satellite imagery data. (See TDP-NESC.)

3. Reduce time delays in revision, increase geographic coverage and resurvey frequency, and enlarge the scales of Coast and Geodetic Survey nautical charts and small craft charts. Expand the bathymetric mapping of the continental shelf. (See TDP and Chapter V-C&GS.)

4. Reduce time delays in revision, increase geographic coverage, and enlarge the scales of Naval Oceanographic Office nautical charts, and increase the timeliness of Notice to Mariners. (See TDP-NAVOCEANO.)

5. Expand the scope of products and services provided by the Great Lakes Regional Data Center and the Lake Survey to include ice atlases and charts, surface current charts, bathymetric maps and a Great Lakes climatological atlas. In addition, develop data bases for water

pollution, ice and snow, waves, surface currents, river flow, and bathymetry for the Great Lakes region. (See TDP and Chapter V-LS and GLDC.)

6. Develop and maintain a series of ocean engineering reports and reference services containing information on design criteria, test results, the effects of the marine environment on vehicles, structures and instrumentation, to supplement the standard references available from commercial sources. (See TDP-NAVOCEANO.)

7. Establish a national system for the automatic acquisition and processing of coastal wave and surface meteorological data. (See TDP-CERC and Weather Bureau and Chapter V-CERC.)

8. Establish a national system of regional fishery data and statistics collection, communication and processing facilities. (See TDP-BCF and BSF&W and Chapter IV-Fishery Statistics Report.)

9. To the extent possible, expand capabilities and coverage of seasonal fishery advisories, preseason abundance forecasts, and fishery resource atlases to all major fisheries. These should be followed up by an evaluation of their accuracy and usefulness. (See TDP-BCF and BSF&W and Chapter IV-Fishery Advisories Services and Preseason Abundance Forecasts.)

10. Establish more automated linkages among the following marine data service organizations: National Oceanographic Data Center (NODC); National Weather Records Center (NWRC); Fleet Numerical Weather Central (FNWC) of the Naval Weather Command; and the Great Lakes Regional Data Center (GLRDC) of the U.S. Lake Survey. Establish similar linkages between NODC/NWRC/SOSC and their recommended regional offices: Woods Hole Oceanographic Institution, Scripps Institution of Oceanography, University of Washington, Oregon

State University, Texas A & M University, University of Michigan University of Miami, and the Lamont-Doherty Geological Observatory. These linkages may be conventional teletype at first, and later upgraded to remote terminals for automated query of computer-searchable data files. (See TDP-NODC, NWRC, and SOSC.)

11. Expand automation of the data inventories at the National Oceanographic Data Center (NODC) to permit derivation of statistics concerning the availability of collected data by lateral and vertical coordinates, type of platform, instrumentation, data collection agency, and schedule of acquisition. (See TDP-NODC.)

12. Distribute fact sheets of marine instrumentation characteristics developed at the National Oceanographic Instrumentation Center to NODC for dissemination to data requesters. This information should be recorded in the data bases maintained at NODC, enabling correlation of instrument characteristics with data values for release to requesters. (See TDP-NODC.)

13. Implement a program for significantly increased collection of surface temperature, water temperature, sea state and surface meteorological parameters from ships and aircraft, emphasizing the use of expendable instruments and digital recording and transmission. (See TDP-FNWC and NMC.)

14. Establish National Data Buoy System shore-processing centers and data transmission facilities for the management of buoy data after they reach shore. (See TDP-USCG.)

15. Provide increased capabilities for the STORET water quality data system including the installation of sensors and telemetry equipment at selected estuaries for the automatic acquisition and transmission of data. (See TDP-FWPCA.)

Recommendation: Establish a permanent mechanism for Federal coordination of marine data management

During the course of the study, the contractor found it invaluable to have one office--the National Council on Marine Resources and Engineering Development--with which planning and policy formulation could be conducted, and the Data Management Advisory Panel (DMAP), made up of professional and scientific representatives from the major government agencies involved in marine sciences, with whom to review technical problems which arose during the study. Hence, this recommendation consists of two parts: first, that one office be designated for cognizance of policies applicable to marine data management activities, and second, that an advisory committee, representing the professional and scientific community, be continued on a permanent basis.

Specific responsibilities of the advisory committee would be those of technical review of progress toward and agreement on solutions to problems that arise in improving data management programs. For example, establishment of standards for quality control in collection of marine data, standards for compatibility of formats in data codification and inventory control, scales and projections for map and chart production, new marine data product specifications, and means for achieving real-time linkages among computer-based files of marine data, would all be appropriate for this committee. Composition of the committee should not be limited to the Federal Government. Rather, explicit and broad representation of the non-Federal marine data producer and user community should be required, with provision for employment of expert consultants as appropriate. Data systems specialists should be included in committee representation. Consideration should be given to the representation of the committee on the Committee on Scientific and Technical Information (COSATI) of the Federal Council for Science and Technology, Office of Science and Technology, Executive Office of the President.

It is suggested that the appropriate designation of the first office be within the Executive Office of the President, more particularly in the National Council on Marine Resources and Engineering Development, unless and until a new office or agency is formed for the purpose of coordinating national marine science activities. The chairman of the advisory committee need not be a member of the Council, but the committee should be available to the Council for consideration of problems and progress in marine data management, and the Council should provide required staff support. (See Chapter VII and TDP-Chapter V.)

Recommendation: Substantially increase the authority and responsibility assigned to the existing national data centers.

The major problem of marine data management is the diffusion and fragmentation of data sources, services and responsibilities. As the Report of the Commission on Marine Science, Engineering and Resources points out: "At present, there is not even a comprehensive index which can tell a potential user what data exist and where, let alone an orderly and expeditious flow of data between facilities and to national data centers equipped to disseminate data to the user community."

The Commission Report makes a distinction which is supported by the present study and with which we concur: mission-oriented agencies, sometimes referred to as primary centers, such as the Weather Bureau and its associated National Meteorological Center, or the research and development laboratories of the U.S. Navy, should not be impeded in any way in the prosecution of [illegible] ssion responsibilities. However, the secondary centers, of which four are generally acknowledged as national data centers--National Oceanographic Data Center (NODC), National Weather Records Center (NWRC), Smithsonian Oceanographic Sorting Center (SOSC), and the Great Lakes Regional Data Center (GLRDC)--have been crippled by chronic lack of funds and authority to discharge their increasingly vital functions of analysis, storage, and dissemination of marine data. In Fiscal

Year 1969, the National Council on Marine Resources and Engineering Development has estimated that direct Federal appropriations for these four centers were $2.33 million out of a total Federal budget for marine science and engineering development of $471.5 million. Federal appropriations to the centers were augmented by contracts with executive agencies, by agreements for reimbursement for specified services, and by use-charges to customers. Nonetheless, none was able to operate at the scale implicit in its charter and with the degree of responsiveness desired by the user community. This is particularly troublesome because these are the centers with which the community of marine scientists and marine industrial development have the most occasion to interact and upon whose services these user groups evaluate the entire marine data management program in government.

A number of specific suggestions will clarify the intent of this recommendation.

1. Authorize and specify that a portion of the funds awarded in marine science contracts are to be used for data preparation and data communications to and from national data centers. The Federal Government is the principal funding agency for the conduct of marine science at research institutions, yet there exists no effective incentive for these institutions to spend a portion of these funds on the tasks of data preparation and communication to national data centers.

   The responsibility for obtaining data for archiving is that of the national data centers. Economy dictates, however, that research institutions be encouraged to perform as many of the tasks of data preparation and routine communication to the centers as possible. Contract provisions in and of themselves may, and probably will, prove to be inadequate. In addition, it is suggested that at least the major research institutions be specifically funded or reimbursed for the costs of establishing technical data centers representing their own specialized holdings,

maintained in data formats and media compatible with those of the relevant national data centers. This will relieve the individual scientist of the obligation for data preparation and communication to the centers, and enable specialized technical personnel to be employed for this function.

2. Exercise the Government's legal authority to require the preparation and communication of marine data to national data centers, if collection is Federally financed.

3. Provide for liaison participation of the national data centers in the planning of data collection for research programs for the purpose of developing a complete plan for data acquisition, communication of data to national data centers, and subsequent processing and dissemination of data to users. Implementation of this suggestion will require that the data centers develop and provide skilled advisory services to those responsible for planning data collection research expeditions.

4. Emphasize and strengthen the research functions appropriate for the intramural staff of the national data centers. This research consists of two kinds: research in the techniques of data management, which requires experienced and capable information system design specialists; and research in the analysis of substantive data included in the holdings of the center, leading to development of products, which require subject matter specialists in the appropriate natural and biological sciences. Implementation of this suggestion could be achieved either by direct hire or by personnel rotation exchange with other government agencies and research institutions.

5. Address the problems of availability and transfer to data centers of industrial marine environmental data, and establish mechanisms for the acquisition of relevant, available defense data. The former may require reimbursement to industrial organizations who have undertaken marine data collection programs; the latter may require the development of procedures for "sanitizing" certain classified data such that military weapons systems performance characteristics are deleted or obscured. In both cases, it is our impression that substantial bodies of data are available and releasable, but that no procedure has been established to facilitate their communication to the appropriate national center. (See TDP-USGS.)

6. It is suggested that NODC be designated the lead agency to establish regional offices--not regional data centers--at or near major marine science research institutions, with NWRC and SOSC as participating agencies. These offices would provide more direct and personal liaison with users and more direct data acquisition for NODC data bases and would serve as information centers for referral of inquiries to NODC and other data centers. It would be desirable for these regional offices to have direct teletype communications to NODC, and they may later be connected by remote terminal directly to the NODC computer for query and printout of substantive material. The concept of a resident liaison representative has been tried out, with good results, at Woods Hole Oceanographic Institution for the past year and has recently been extended to the Scripps Institution of Oceanography. Other appropriate research institutions are the University of Washington, Oregon State University, Texas A & M University, University of Michigan, University of Miami, and the Lamont-Doherty Geological Observatory.

The suggestion for regional offices rather than regional data centers is quite deliberate, if we understand a regional data center as maintaining data holdings which duplicate some or all of the data holdings at NODC. Regional data centers may evolve as more effective computer networking technology is developed. For the present, however, adequate proof of such networking capability at the required level of operational reliability is lacking. Perhaps even more pertinent is our opinion that investment in regional NODC data centers at this time would simply divert funds and resources urgently needed at NODC itself and would further delay the development of needed capabilities at the national center. (See Chapter V-NODC and TDP-NODC, NWRC, SOSC.)

Recommendation: Designate a national ocean engineering data referral center.

Ocean engineering data is the major class of data for which there is presently no Federal focus of data management responsibility in evidence. Further, ocean engineering data are becoming more important to the user community as new submersibles are being developed, offshore oil and gas exploration expands, marine mineral extraction is increased, and additional ocean platforms are developed for environmental reporting, etc. Such a data center would make available to non-defense users ocean engineering reference services for technical reports; information on the effects of the marine environment on vehicles, structures and instrumentation, physiological data, accident reports, etc.

Candidates for designation as a national ocean engineering data referral center include NODC, the Coastal Engineering Research Center (CERC) of the Corps of Engineers (for coastal zone data) and the Office of the Assistant Oceanographer of the Navy for Ocean Engineering Development (which has access to deep ocean data from a variety of defense projects). At the moment, NODC has neither the basic data files nor personnel expertise in ocean engineering. Nevertheless, in order to reduce further proliferation of centers, we suggest that NODC operate as a referral center for non-defense ocean engineering users,

drawing upon the capabilities of CERC, USGS, and the Navy for source data and assistance. (See Chapter V-NODC and TDP-CERC, USGS, NAVOCEANO and NODC.)

Recommendation: Develop and maintain a comprehensive inventory of marine data holdings, samples, products and publications.

The need for an inventory of marine data holdings, samples, products and publications has become increasingly evident. Preliminary studies by the Ocean Center of the Office of the Oceanographer of the Navy and by the System Development Corporation indicate that the number of organizations, including major libraries, maintaining significant specialized marine science holdings is well in excess of 10,000. To the user, it is important to know where to turn for the data, samples, products and/or publications of immediate need. To the producer, it is often equally important to know where to send marine data so that they will be available to interested user groups. At present, no inventory exists of these organizations and their holdings. The preliminary work performed by the Ocean Center and SDC forms a beginning, but needs to be completed, and very possibly extended and maintained on a periodic basis thereafter. NODC is recommended as the responsible Federal coordinating agency with substantial participation by USGS and SOSC. This directory would include descriptions of Federal data bases as described under Master Marine Data Base Directory in the NODC TDP.

A significant step toward the preparation of the initial inventory could be achieved if the Federal Government were to reimburse research institutions and private organizations for publishing current data and sample holdings. This would involve only a modest cost, but would provide a much-needed resource to the Government. These publications would bring to light the description of characteristics of the holdings of thousands of organizations and research scientists, and would expedite completion of the desired inventory.

After an initial inventory is completed, it is recommended that consideration be given to an automated reference system for correlated retrieval of data and sample information (association of environmental data with sample information), including a description of the conditions of collection (such as the agency, platform and instrumentation), bibliographic references to products, and reports and documents which have been published on the basis of the data and/or samples. We recognize that this is an undertaking of substantial magnitude, and careful evaluation may prove that the benefits to be derived limits its scope to specialized areas of application such as defense weapons systems research and development. (See Chapter V-NODC and TDP-USGS, SOSC and NODC.)

Recommendation: Strengthen Federal/State relationships in the acquisition of marine data and the provision of data services.

By law, the States are responsible for resource management and conservation of the coastline, tidelands, and of the lands surrounding the Great Lakes. The coastal and Great Lakes regions are now, and will be even more, important to the nation as increasing proportions of the population inhabit them. The ability of the States to undertake farsighted, consistent programs of conservation and pollution abatement has not been demonstrated to date. Even within the States, a variety of agencies are typically involved in the matter. In the State of California, nine separate agencies are producers and/or users of marine data for resource planning and management. No one of these agencies knows fully what data are available or of interest to the others, and the Federal Government does not possess an adequate inventory of the State's data files or needs. The situation is similar elsewhere.

It is suggested that the Federal Government inventory existing State marine data programs and files, and actively promote consistent data collection and data management practices. Federal grants for this purpose, calling for matching funds from the States, would appear to be a cost/effective way to establish closer working relationships in this important area. An existing administrative mechanism that could be used to accomplish this recommendation

is the network of State Technical Information Reference Centers operated with the Federal assistance of the Department of Commerce.

Recommendation: Complete the installation of on-board data processing systems on Federal oceanographic expedition ships.

On-board data processing capability for oceanographic survey and expedition vessels is well established in the technology. The advantages of on-board processing include immediate verification of data quality, the opportunity to adjust data sampling design in real time, on-board product generation, and the expeditious processing of data for transmission to shore-based facilities for later detailed analysis. Some of the newer survey ships are not fully instrumented with the on-board data processing available and desired, and older ships are being retrofitted with such data processing systems very slowly. It is recommended that direction to complete an on-board data processing implementation program be given to the Federal agencies and laboratories.

We recognize that within the next decade, developments in satellite communications will almost certainly advance to the stage at which bulk transfer of survey data to shore-based processing and analysis centers will be operable and economical. While this mode of data processing will affect the rapidity of large-scale data analysis and improve the efficiency of much of the marine data product preparations, it will not substitute for all on-board data processing requirements, and will of itself necessitate automated capability on shipboard for data formatting for transmission to the satellite. Therefore, we do not believe the desirability and utility of on-board data processing will become obsolete in the foreseeable future. (See Chapter V-Recommendations which Apply to Several Agencies and TDP-NAVOCEANO and C&GS.)

Recommendation: Consider for development the following new products which are described in Chapter IV:

- Sea-air energy exchange forecasts
- Subsurface current forecasts
- Upwelling forecasts
- Sea surface water level forecasts
- Inland Lakes ice forecasts
- Sea-air energy exchange atlases
- Surface water mass transport atlases
- Salinity atlases
- Bottom temperature atlases
- Water quality (pollution) maps and atlases

II. OBJECTIVES, SCOPE, AND METHODOLOGY

OBJECTIVES

The objective of the Technical Development Plan (TDP) is to improve marine data products and services provided by the Federal Government to a variety of users. Users of marine data products and services are found in the fields of research; transportation; naval planning and operations; marine mapping and charting; marine forecasting; commercial and sportfishing; Federal, State and regional planning and management; and public marine recreational and educational activities. The needs, including the priority needs, of data users are described in Volume One of this report.

The TDP recommends that products and services be improved both by enhancing existing products and services and by introducing new products and services. In order to support these improvements, recommendations are also made for increases in data acquisition, improvements in existing data bases and the development of new data bases. The mechanisms chosen for achieving greater benefits for users are (1) the upgrading of Federal agency data service and product operations and (2) the improvement of the marine data network for the collection, transmission, storage and dissemination of marine data. In order to achieve the objective of the TDP, a 10-year, time-phased plan has been designed which provides the resources necessary to achieve the improvements in Federal products and services desired by users. The TDP includes provisions for new instrumentation and new data communication and processing hardware, hardware costs, software development and maintenance, software personnel and costs, computer operations personnel and costs, and application and discipline personnel and costs which are required in the next decade to achieve improvements in products and services and to develop new products and services.

In this study, three TDP alternatives have been considered. Each alternative corresponds to different assumed levels of total annual funds available for

marine priority data and products in the next decade. The first alternative (Plan A) is based on a budget appropriate for the improvement of existing products and services but with no provisions for new products and services. The second plan (Plan B) provides for improvements in existing products and services and the development and implementation of new products and services. The highest-budget plan (Plan C) contains the same elements as the middle budget plan but also provides for the implementation of major data acquisition networks, e.g., coastal wave gauge network. Three plans have been formulated, rather than one, as a contingency against the uncertainties of future marine budgets.

SDC has developed a cost performance model which has been implemented on the SDC IBM 360/67. This model can be used to generate TDP plans for any assumed total priority data and product budget for any number of years desired. The model outputs are (1) budget allocations by product and data type and (2) product and data service performance levels (these are defined in Chapter VI, Volume One). Total product and data service budgets can be distributed to individual agency budgets by the method described in Chapter VI, Volume One. The model can be implemented on any computer which is supplied with a mathematical programming package. The model does not provide the level of detail of hardware requirements, software costs, etc., shown in this TDP. However, the budget allocations of the model can be used as a basis for determining the detailed requirements.

The three plans are discussed and evaluated in Chapter VI, Volume One. This volume describes Plan C in detail and is the plan recommended for implementation, assuming the availability of required funds.

SCOPE

The TDP includes both individual agency and marine data network development plans. The two plans constitute the National Data Program for the Marine

Environment. The TDP is addressed to the requirements for improving individual agency data service operations and the broader requirement of strengthening the entire marine data network.

The Federal agencies which are included in the TDP are:

Lake Survey (LS) and Great Lakes Data Center (GLDC)
Coastal Engineering Research Center (CERC)
Naval Oceanographic Office (NAVOCEANO)
Coast and Geodetic Survey (C&GS)
U.S. Geological Survey (USGS)
Weather Bureau Offices (WB)
National Meteorological Center (NMC)
National Environmental Satellite Center (NESC)
Fleet Numerical Weather Central (FNWC)
Bureau of Commercial Fisheries (BCF)
Bureau of Sport Fisheries and Wildlife (BSF&W)
Federal Water Pollution and Control Administration (FWPCA)
U.S. Coast Guard (USCG)
National Oceanographic Data Center (NODC)
National Weather Records Center (NWRC)
Smithsonian Oceanographic Sorting Center (SOSC)

This group of agencies does not include all Federal organizations having responsibilities for marine data management. It does include those having a significant influence on the collection, storage, processing and dissemination of marine data and the production and dissemination of data products.

In order to ensure the implementation of the National Data Program, responsibilities for its implementation must reside with individual agencies until a national marine and atmosphere agency is established. Therefore, considerable emphasis is accorded to recommendations which require individual agency action.

In addition, many of the recommendations require interagency cooperation--for example, collection of environmental data in the coastal zone and the publication of a coastal atlas, production of wave and ice charts for the Great Lakes, establishment of regional data service offices, operation of a national coastal wave gauge network, development of national marine data directories and indices, and the operation of a national fishery statistics network. Wherever interagency effort is required, a lead agency is recommended in order to fix responsibilities for program implementation. Interagency efforts would be coordinated by the staff of the Marine Sciences Council and the Data Management Advisory Panel until a national oceanographic and atmospheric agency is created.

Although marine activities are funded primarily on an agency basis, planning and budgeting is also done on a program basis. Hence, the TDP identifies the requirements for implementing data programs for Great Lakes and coastal development; mapping, charting and marine environment description; marine forecasting, research and support; fisheries; water quality; onshore buoy data management; and national data centers.

In addition to the requirement for interagency cooperation in implementing the TDP, there is also the need for cooperation among the Federal agencies, States, universities and industry for the exchange of data and the efficient routing of data from collector to user. Examples of situations in which a cooperative effort at various levels is required are the participation of the States and regions with the Federal Government in the preparation of coastal atlases and the transfer of data between industry and other elements of the marine community.

Only priority products and data are considered in the TDP. Because of this, one should not expect to find an equivalence between resource requirements presented in the TDP and the utilization of resources in present agency operations. Also, some agencies which have historically operated on a small budget

have been recommended for substantial upgrading. Other agencies, with larger budgets, may not receive a corresponding degree of attention because of an absence of major data management problems. There must exist important user needs and present inadequacies in data services in order for a recommendation to be included in the TDP. In general, a strong positive correlation will be found between problems which exist in data management and the resources recommended for agency operations. The main criteria for TDP recommendations are the user benefits which will result from product and service improvements. The size of present agency data operations or contributions to marine science programs have not been used as criteria for recommending improvements or increases in resources.

There is considerable emphasis in the TDP on the improvement of products and services for public and private users--merchant mariners, fishermen, small craft operators, swimmers, and residents of the coastal zone. These user groups are large, poorly organized, and ill-equipped to make their needs known to the Federal Government. In accordance with the emphasis on the needs of these users, such products as coastal weather and wave forecasts, nautical charts, small craft charts, and fishery statistics receive considerable attention in the TDP.

METHODOLOGY

The methodology for the design of the TDP consists of the following steps:

1. Based on the determination of user needs and the priority of needs, requirements for improvements in existing products and services and new products and services are established, e.g., the priority need to reduce the time interval between updating nautical charts and the need to provide coastal atlases.

2. Improvements in product or service performance are programmed to be consistent with the feasibility of providing the resources which are

required to implement the improvements within the decade. In addition, maximum performance levels are established to be consistent with user needs within the decade. For example, a reduction in the time delay of incorporating changes in Notice to Mariners from eight weeks to one week over a period of 10 years is recommended; reduction in the delay to less than one week would be of no practical value. Gradual improvements over the decade which are consistent with the rate at which resources can be provided have been recommended. The model mentioned previously is used as an aid in allocating funds to product and data parameter groups and for determining appropriate rates of product and data service improvement.

3. Any new data collection or data base developments that are required in order to implement product and service improvements are specified. It is axiomatic for good systems work to start with the identification and analysis of the requirements for outputs--products and services in terms of their quality, quantity, frequency of output and timeliness--and then to establish the requirements for data needed to furnish the required outputs. In some cases (data centers) the output is primarily data, or summaries of data, rather than a standard product, such as a nautical chart. However, the principle of specifying user requirements before specifying data inputs or bases still applies. This is in contradistinction to the approach of specifying the data collection and data base requirements first and outputs last. In the former approach, the outputs govern the inputs and no greater input is required than needed to supply the outputs. In the latter approach, more input may be generated than is required to satisfy output requirements.

4. Computer hardware and data communication equipment requirements and costs are specified for achieving the needed improvements.

5. Software development and maintenance requirements and costs for the improvement and creation of products, data bases, and data acquisition are specified.

6. Computer operations personnel required to staff new or augmented computer facilities are determined.

7. Applications personnel, e.g., cartographers and discipline personnel, are specified.

The TDP contains both new requirements and costs and extrapolations of existing requirements and costs. In general, all hardware, software, and computer operations requirements and costs represent new requirements. Discipline or applications personnel requirements are usually forecasts of future requirements for existing organization components. Total annual costs for each agency for each of ten years, and a ten-year total cost for agency operations, have been determined. These are the amounts which would be required each year and for the decade to implement the TDP and consist of both new costs and extensions of presently incurred costs.

As a general strategy, the addition of resources is programmed to occur most rapidly in the early years of the TDP in an attempt to bring the management of marine data in line with available technology. Usually, the increments in funding proceed at a more modest rate in the later years of the decade as unit costs are lowered through the application of technology and as increased sophistication in data management prevails.

III. SUMMARY OF THE TECHNICAL DEVELOPMENT PLAN

This section contains a summary of the Technical Development Plan (TDP). The details of the TDP appear in Chapters IV and V of this volume.

AGENCY AND PROGRAM DEVELOPMENT PLANS

The TDP is summarized by agency and program according to the following program categories:

- Great Lakes and Coastal Development
- Mapping, Charting and Marine Environment Description
- Marine Forecasting, Research and Support
- Fisheries
- Water Quality
- Onshore Buoy Data Management
- National Data Centers

The TDP is also summarized by the major categories of data management activity. These are:

- Product/Service Requirements
- Data Base Development Requirements
- New Data Acquisition/Communication System Requirements

The product, data base development, and new data acquisition and communication system requirements for the time period FY 71-80 are summarized by program (e.g., Great Lakes and Coastal Development) and agency in Table III-1. In general, data acquisition activities are required for all data base development requirements shown in the table. The column labeled "New Data Acquisition and Communication System Requirements" requires significantly new systems of data acquisition and/or communication, such as a national network of coastal wave

gauge installations and associated telemetry equipment. Products, services and data bases in Table III-1 have been classified according to requirements for improvements in existing products, services and data bases (1), and requirements for new products, services and data bases (2). The criticality of user need for data, products and services, and the unfulfilled needs for these data, products and services, are discussed in Chapters III and IV, Volume One. Major requirements for product and service improvement, data service improvement, data base development, data acquisition and communication, and new product and service development are discussed in Chapters IV and V of the TDP. The highlights of recommended improvements in products and services and new products and services for each program area are presented below. The agency (or, where several agencies are involved, the lead agency) which is recommended for implementation responsibility is indicated.

GREAT LAKES AND COASTAL DEVELOPMENT PROGRAM

- Implementation of a coastal wave gauge network for coastal U.S. waters of approximately 100 gauges for the recording of wave height and direction data. This network would be used and operated jointly by the Army Corps of Engineers, primarily the Coastal Engineering Research Center, for coastal engineering and research, and by the ESSA-Weather Bureau for coastal wave and weather forecasting and monitoring.

- Operation of the coastal wave gauge network in a non-real-time mode for coastal engineering purposes; real time data acquisition and transmission would be required for weather Bureau use.

- Development of a climatological atlas for the Great Lakes (Lake Survey).

- Completion of recreation chart coverage for the Great Lakes (Lake Survey).

TABLE III-1

TECHNICAL DEVELOPMENT PLAN (PLAN C) SUMMARY OF PRIORITY PRODUCT/SERVICE, DATA BASE AND DATA ACQUISITION REQUIREMENTS, FY 70-81

AGENCY	PRODUCT/SERVICE REQUIREMENTS	DATA BASE DEVELOPMENT REQUIREMENTS	NEW DATA ACQUISITION/ COMMUNICATION SYSTEM REQUIREMENTS
GREAT LAKES AND COASTAL DEVELOPMENT PROGRAM			
LAKE SURVEY AND GREAT LAKES DATA CENTER	• ICE ATLAS AND CHART (1) • RECREATION CHART (1) • WAVE CHART AND ATLAS (1) • SURFACE CURRENTS CHART (1) • BATHYMETRIC MAP (1) • PRODUCTS AND SERVICES CATALOG (2) • GREAT LAKES CLIMATOLOGICAL ATLAS (2) • ON-LINE ENGINEERING COMPUTATION (2)	• DATA INVENTORY (1) • WATER QUANTITY (1) • WATER MOTION (1) • POLLUTION (2) • ICE AND SNOW (2) • WAVE (2) • SURFACE CURRENTS (2) • RIVER FLOW (2) • BATHYMETRIC (2)	• SHIPBOARD DIGITAL HYDROGRAPHIC AND BATHYMETRIC DATA COLLECTION
COASTAL ENGINEERING RESEARCH CENTER	• COASTAL WAVE ANALYSIS (1) • LITTORAL PROCESSES ANALYSIS (1) • SEDIMENT ANALYSIS (1) • LABORATORY ANALYSIS (1) • COASTAL ENGINEERING REPORT (2)	• COASTAL WAVE (1) • LABORATORY DATA (1)	• COASTAL WAVE DATA NETWORK
MAPPING, CHARTING AND MARINE ENVIRONMENT DESCRIPTION PROGRAM			
NAVAL OCEANOGRAPHIC OFFICE	• BATHYMETRIC MAP (1) • NAUTICAL CHART (1) • NOTICE TO MARINERS (1) • SEA SURFACE TEMPERATURE ATLAS (1) • ICE ATLAS (1) • OCEAN STATION ATLAS (1) • PILOT CHART (1) • SOUND VELOCITY ATLAS (1) • THERMOCLINE DEPTH CHART (1) • MAGNETIC FIELD MAP (1) • GRAVITY FIELD MAP (1) • SURFACE CURRENT CHART (1) • SEA & SWELL CHART (1) • MARINE GEOLOGY ATLAS (1) • SUBSURFACE CURRENT CHART & ATLAS (2) • OCEAN ENGINEERING HANDBOOK (2)	• BATHYMETRIC (1) • TOPOGRAPHIC (1) • NAVIGATION AIDS/ HAZARDS (1) • HYDROGRAPHIC (1) • MAGNETIC (1) • GRAVITY (1) • ICE OBSERVATIONS (1) • SST OBSERVATIONS (1) • SUB & SURFACE CURRENTS (1) • SURFACE METEOROLOGICAL OBSERVATIONS (NWRC) (1) • OCEAN STATION (NODC)(1) • BT (NODC) (1) • OCEAN ENGINEERING (2)	• SHIPBOARD DIGITAL HYDROGRAPHIC, BATHYMETRIC, GEOPHYSICAL AND OCEANOGRAPHIC DATA COLLECTION

(1) Improvement of existing priority product, service or data base is required.
(2) New product, service or data base is required.

TABLE III-1 (CONT'D)

TECHNICAL DEVELOPMENT PLAN (PLAN C) SUMMARY OF PRIORITY PRODUCT/SERVICE, DATA BASE AND DATA ACQUISITION REQUIREMENTS, FY 70-81

AGENCY	PRODUCT/SERVICE REQUIREMENTS	DATA BASE DEVELOPMENT REQUIREMENTS	NEW DATA ACQUISITION/ COMMUNICATION SYSTEM REQUIREMENTS
COAST AND GEODETIC SURVEY	• BATHYMETRIC MAPS (1) • NAUTICAL CHART (1) • SMALL CRAFT CHART (1) • TSUNAMI WARNINGS (1) • TIDE TABLES (1) • TIDAL CURRENT TABLES AND CHARTS (1) • COASTAL ATLAS (2) • SEA LEVEL VARIATION CHART AND TABLE (2)	• BATHYMETRIC (1) • TOPOGRAPHIC (1) • HYDROGRAPHIC (1) • NAVIGATIONAL AIDS/ HAZARDS (1) • MAGNETIC (1) • GRAVITY (1) • TIDES (1)	• BATHYMETRIC SURVEY OF CONTINENTAL SHELF. • HYDROGRAPHIC RESURVEYS. • SHIPBOARD DIGITAL HYDROGRAPHIC, BATHYMETRIC, GEOPHYSICAL AND OCEANOGRAPHIC DATA COLLECTION. • COASTAL ATLAS DATA COLLECTIONS.
U.S. GEOLOGICAL SURVEY	• DIRECTORY OF MARINE GEOLOGICAL PRODUCTS (2) • SHIP TRACK MAPS (2) • PROFESSIONAL PAPER BIBLIOGRAPHY (2) • BOTTOM CHARACTERISTICS OCEAN ENGINEERING REPORTS (2) • CLEARINGHOUSE FOR THE EXCHANGE OF INDUSTRY DATA (2)	• CONSOLIDATED GEOLOGICAL PRODUCT DESCRIPTOR, PRODUCT DIRECTORY, PROFESSIONAL PAPER AND SHIP TRACK INDEX (2) • INDUSTRY DATA AVAILABILITY/NEEDS FILE (2) • INDUSTRY SUPPLIED DATA FILE (2)	
MARINE FORECASTING, RESEARCH AND SUPPORT PROGRAM			
WEATHER BUREAU OFFICES	• COASTAL WEATHER AND WAVE FORECAST (1) • HIGH SEAS FORECAST (1) • TROPICAL CYCLONE FORECAST (1) • TROPICAL CYCLONE WARNING (1) • STORM SURGE AND ANOMALOUS TIDE (1) • SURF FORECAST (1) • DOMESTIC ICE FORECAST (1) • SEICHE WARNING (1) • AUTOMATIC COASTAL WAVE MONITORING (2) • COASTAL WAVE SPECTRAL AND STATISTICAL ANALYSIS (2) • SST ANALYSIS (2)	• COASTAL WAVE SPECTRA & WAVE STATISTICS (2) • COASTAL WAVE AND SURFACE METEOROLOGICAL CLIMATOLOGICAL DATA (2)	• COASTAL WAVE AND SURFACE METEOROLOGICAL PARAMETER ACQUISITION AND TELEMETRY NETWORK. • AUGMENTATION OF SERVICE C TELETYPEWRITER NETWORK FOR INCREASED DATA FROM BUOYS AND SHIPS

(1) Improvement of existing priority product, service or data base is required.

(2) New product, service or data base is required.

TABLE III-1 (CONT'D)

TECHNICAL DEVELOPMENT PLAN (PLAN C) SUMMARY OF PRIORITY PRODUCT/SERVICE, DATA BASE AND DATA ACQUISITION REQUIREMENTS, FY 70-81

AGENCY	PRODUCT/SERVICE REQUIREMENTS	DATA BASE DEVELOPMENT REQUIREMENTS	NEW DATA ACQUISITION/ COMMUNICATION SYSTEM REQUIREMENTS
FLEET NUMERICAL WEATHER CENTRAL AND NATIONAL METEOROLOGICAL CENTER	• [illegible] WEATHER PRODUCTS (FNWC AND NMC) (1) • [illegible] FORECASTS (FNWC AND NMC) (1) • [illegible] LARGE WEATHER FORECASTS (FNWC AND NMC) (1) • SST CHARTS (FNWC) (1) • THERMAL STRUCTURE FORECASTS (FNWC) (1)		• AIRCRAFT AND SHIP (NAVAL AND MERCHANT) DIGITAL COLLECTION AND TRANSMISSION OF SXBT, AXBT, STD, SEA STATE AND SURFACE METEOROLOGICAL DATA.
NATIONAL ENVIRONMENTAL SATELLITE CENTER	• SATELLITE CLIMATOLOGICAL PRODUCTS (1) • COMBINED SATELLITE METEOROLOGICAL DATA PRODUCTS (2) • SATELLITE DATA QUALITY CONTROL PROCEDURES (2) • COMPUTER GRAPHIC MODELING AND DISPLAYS OF SATELLITE AND METEOROLOGICAL DATA (2)	• SATELLITE DATA PRODUCT DESCRIPTOR FILES (2) • LINKAGE OF NESC AND NMC DATA BASES (2)	
FISHERIES PROGRAM			
BUREAU OF COMMERCIAL FISHERIES AND BUREAU OF SPORT FISHERIES AND WILDLIFE	• [illegible] ADVISORY (1) • [illegible] FORECAST (1) • FISHERY [illegible] (1) • FISHERY RESOURCE ATLAS (1) • FISHERY STATISTICS REPORT (1) • SPORT FISHERY ATLAS (1) • ESTABLISH NATIONAL SYSTEM OF REGIONAL DATA PROCESSING AND PRODUCT PREPARATION CENTERS FOR THE ABOVE PRODUCTS (2)	• FISHERY CATCH EFFORT STATISTICS (1) • FISHERY ECONOMIC STATISTICS (1) • FISHERY EXPLORATORY GEAR DATA (1) • CORRELATION OF CATCH AND EFFORT STATISTICS WITH ENVIRONMENTAL DATA (2)	• NATIONAL SYSTEM OF REGIONAL FISHERY DATA COLLECTION AND COMMUNICATION CENTERS.

(1) Improvement of existing priority product, service or data base is required.

(2) New product, service or data base is required.

TABLE III-1 (CONT'D)

TECHNICAL DEVELOPMENT PLAN (PLAN C) SUMMARY OF PRIORITY PRODUCT/SERVICE, DATA BASE AND DATA ACQUISITION REQUIREMENTS, FY 70-81

AGENCY	PRODUCT/SERVICE REQUIREMENTS	DATA BASE DEVELOPMENT REQUIREMENTS	NEW DATA ACQUISITION/ COMMUNICATION SYSTEM REQUIREMENTS
WATER QUALITY PROGRAM			
FEDERAL WATER POLLUTION CONTROL ADMINISTRATION	• GENERALIZED FILE MANAGEMENT AND INFORMATION RETRIEVAL SYSTEM FOR STORET (2) • REMOTE INQUIRY SYSTEM FOR STORET (2 • STORET SYSTEM FOR PROCESSING DATA COLLECTED ON-LINE FROM REMOTE SENSORS (2) • AUTOMATIC ON-LINE DETECTION OF WATER QUALITY CONDITIONS WHICH DO NOT MEET STANDARDS (2) • BEFORE AND AFTER ANALYSIS OF WASTE DISCHARGE AND WASTE TREATMENT OPERATIONS (2) • WATER QUALITY MODELS (2)	FOR STORET: • CONTINUED WATER QUALITY DATA COLLECTION FROM THE STATES AND REGIONS (1) • INDUSTRIAL WASTE DISCHARGE, OIL LEAK AND OIL SPILL DATA (2) • WATER QUALITY ECONOMIC DATA AND STATISTICS(2) • ENVIRONMENTAL DATA PRIOR TO AND AFTER WASTE DISCHARGE AND WASTE TREATMENT OPERATIONS (2)	• INSTALLATION OF SENSORS AND TELEMETRY SYSTEM FOR SELECTED ESTUARIES. • REMOTE TERMINAL COMMUNICATION.
ON SHORE BUOY DATA MANAGEMENT PROGRAM			
U.S. COAST GUARD	• SHORE PROCESSING CENTERS FOR BUOY DATA (2) • LAND COMMUNICATION FACILITIES FOR BUOY DATA (2) • BUOY DATA QUALITY CONTROL STANDARDS (2) • BUOY DATA FORMATTING AND EDITING (2) • SPACE TIME CORRELATION OF BUOY DATA (2)	• SYNOPTIC AND TIME SERIES DATA BASES FOR TEMPORARY STORAGE OF BUOY DATA (2)	• LAND BUOY DATA COMMUNICATION SYSTEM FROM SHORE FACILITIES TO FNWC AND NMC.

(1) Improvement of existing priority product, service or data base is required.

(2) New product, service or data base is required.

TABLE III-1 (CONT'D)

TECHNICAL DEVELOPMENT PLAN (PLAN C) SUMMARY OF PRIORITY PRODUCT/SERVICE, DATA BASE AND DATA ACQUISITION REQUIREMENTS, FY 70-81

AGENCY	PRODUCT/SERVICE REQUIREMENTS	DATA BASE DEVELOPMENT REQUIREMENTS	NEW DATA ACQUISITION/ COMMUNICATION SYSTEM REQUIREMENTS
NATIONAL DATA CENTER PROGRAM			
NATIONAL OCEANOGRAPHIC DATA CENTER	• EXISTING SUMMARIES, PLOTS AND TABULATIONS (1) • NAMDI-NAPIS DIRECTORY/ INVENTORY CONTROL (1) • LIVE ATLAS (2) • COMPUTER GRAPHICS FOR MODELING (2) • OCEAN MODELS (2) • OCEAN ENGINEERING REFERRAL CENTER (2) • REGIONAL OFFICES (2) • REMOTE INQUIRY OF DATA BASES (2) • ON-LINE RETRIEVAL TELEPHONE ANSWERING SERVICE (2) • CRITERIA FOR ACCEPTANCE OF DATA (2)	• BT (1) • OCEAN STATION (1) • BIOLOGICAL (1) • GEOLOGICAL DATA INVENTORY (1) • SURFACE CURRENT (1) • DRIFT BOTTLE (1) • NAMDI-NAPIS (1) • CHEMICAL (2) • NEARSHORE (2) • STD (2) • SUBSURFACE CURRENTS (2) • SEDIMENT CHEMISTRY (2) • GEOTHERMAL (2) • SATELLITE (2) • BCOT (2) • SOUND VELOCIMETER (2) • UNDERWATER PHOTOGRAPHY INDEX (2) • OCEAN ENGINEERING (2) • STRUCTURE DATA BASES IN VARIOUS STORAGE LEVELS (DIRECT ACCESS, SERIAL ACCESS, ARCHIVAL, ETC) ACCORDING TO DEMANDS FOR DATA (2) • INCORPORATE INSTRUMENTATION DATA WITH DATA BASES (2) • INVENTORY OF OCEAN ENGINEERING DATA (2) • REMOTE LINKING OF NODC AND NWRC DATA BASES (2)	• "DATA ACQUISITION" FROM ORIGINAL COLLECTORS OF DATA FOR NEW DATA BASE DEVELOPMENT. • TELETYPE COMMUNICATION WITH REGIONAL OFFICES. • REMOTE TERMINAL COMMUNICATION WITH REGIONAL OFFICES. • MAGNETIC TAPE TO MAGNETIC TAPE COMMUNICATION WITH FNWC AND NWRC. • ON-LINE ACCESS TO NWRC DATA BASES.
NATIONAL WEATHER RECORDS CENTER	• CLIMATOLOGICAL ATLAS (1) • STORAGE AND RETRIEVAL SYSTEM FOR MSOF SYNOPTIC & TIME SERIES REPRESENTATIONS (1) • MSOF AUTOMATED INDEX (2) • REGIONAL OFFICES (2) • REMOTE INQUIRY OF DATA BASES (2) • COMPUTER GRAPHICS FOR MODELING (2) • OCEAN/ATMOSPHERIC MODELS (2) • CONTRIBUTE TO DEVELOPMENT OF COASTAL AND GREAT LAKES CLIMATOLOGICAL ATLASES (2) • SATELLITE DATA CLIMATOLOGICAL PRODUCTS (2)	• AUTOMATED MSOF INDEX FILE (2) • DATA AND DOCUMENTS INDEX FILE (2) • STRUCTURE DATA BASES IN VARIOUS STORAGE LEVELS (DIRECT ACCESS, SERIAL ACCESS, ARCHIVAL, ETC) ACCORDING TO DEMANDS FOR DATA (2) • REMOTE LINKING OF NODC AND NWRC DATA BASES (2)	• TELETYPE COMMUNICATION WITH REGIONAL OFFICES, FNWC, AND 14 WEATHER BUREAU OFFICES. • REMOTE TERMINAL COMMUNICATION WITH REGIONAL OFFICES AND WEATHER BUREAU OFFICES. • MAGNETIC TAPE TO MAGNETIC TAPE COMMUNICATION WITH FNWC. • ON-LINE ACCESS TO NODC DATA BASES

(1) Improvement of existing priority product, service or data base is required.

(2) New product, service or data base is required.

TABLE III-1 (CONT'D)

TECHNICAL DEVELOPMENT PLAN (PLAN C) SUMMARY OF PRIORITY PRODUCT/SERVICE, DATA BASE AND DATA ACQUISITION REQUIREMENTS, FY 70- 81

AGENCY	PRODUCT/SERVICE REQUIREMENTS	DATA BASE DEVELOPMENT REQUIREMENTS	NEW DATA ACQUISITION/ COMMUNICATION SYSTEM REQUIREMENTS
SMITHSONIAN OCEANOGRAPHIC SORTING CENTER	• SPECIMEN-DATA-BIBLIOGRAPHY DIRECTORY (2) • STORAGE AND RETRIEVAL LANGUAGE (2) • PARTICIPATION IN REGIONAL OFFICES (2) • REMOTE INQUIRY OF DATA BASES (2) • IN-HOUSE INTERACTIVE TERMINAL (2)	• INFORMATION LINKAGES AMONG SPECIMENS, DATA AND BIBLIOGRAPHIES (2) • CONSOLIDATE COLLECTION, INVENTORY OF SAMPLES AND IDENTIFIED SPECIMEN FILES (2) • STRUCTURE DATA BASES IN VARIOUS STORAGE LEVELS ACCORDING TO DATA DEMAND (2) • DATA BASE COMPRESSION (2)	• REMOTE TERMINAL COMMUNICATION WITH REGIONAL OFFICES.

(1) Improvement of existing priority product, service or data base is required.

(2) New product, service or data base is required.

- Development and production of ice atlases and charts, wave charts and atlases, surface current charts and bathymetric maps for the Great Lakes (LS and GLDC).

- Development of pollution, wave, ice and snow, surface currents, river flow and bathymetric data bases for the Great Lakes (LS and GLDC).

- Increased data processing and analysis capability for the Great Lakes Data Center and Coastal Engineering Research Center (one computer system at GLDC and one data acquisition and computer system at CERC).

MAPPING, CHARTING AND MARINE ENVIRONMENT DESCRIPTION PROGRAM

- Improvements in nautical and small craft chart geographic coverage and timeliness (C&GS and NAVOCEANO).

- Reduction in nautical chart resurvey frequency to 50 years by 1985 (C&GS).

- Bathymetric survey of 70 percent of the continental shelf (C&GS).

- Production of ocean engineering reports (NAVOCEANO,[1] CERC & USGS).

- Production of coastal atlas and coastal data collection (C&GS).

- Production of sea level variation charts and tables (C&GS).

- Increased use of automation--primarily computer graphics--in chart and map production (C&GS and NAVOCEANO).

- Installation of 5 shore-based computer systems (3 NAVOCEANO, 2 C&GS).

- Installation of 19 shipboard data acquisition and computer systems (12 NAVOCEANO, 7 C&GS) for hydrographic, bathymetric, geophysical and oceanographic surveys.

---

[1] Lead agency.

- Establishment of a clearinghouse for the exchange of data between industry and other sectors of the marine community (USGS).

- Creation of geological product directories and ship track maps (USGS).

MARINE FORECASTING, RESEARCH AND SUPPORT PROGRAM

- Implementation and operation of a real-time coastal wave and surface meteorological data network (Weather Bureau Offices in cooperation with CERC).

- Installation of computer systems in 14 Weather Bureau Offices for processing of coastal wave and surface observation data (Weather Bureau Offices).

- Accelerated use of aircraft and ships (naval and merchant) for the collection of sea surface temperature, water temperature and salinity, and sea state and surface meteorological data, emphasizing the use of expendable instruments and digital recording and transmission of the data.

- Installation of instrumentation aboard 10 aircraft, 304 naval ships, and 504 merchant ships, and communication of the data to the Naval Environmental Data Network and the Weather Bureau network is required by 1980 for the system. (It is recommended that there be joint responsibility for implementation between FNWC and NMC, with FNWC acting as lead agency for the Navy and NMC acting as lead agency for ESSA.)

- Integration of meteorological data (wind speed and direction, pressure, air temperature, sea surface temperature and sea state) with satellite products (digitized cloud mosaics, infrared sea temperature mappings, vertical temperature of the atmosphere profiles) (NESC).

- Linking of NESC and NMC data processing systems and data bases in order that the above integration of meteorological and satellite data may be accomplished (NESC).

- Development of computer graphics capability for analyzing and displaying hemispheric and global weather data collected by satellite (NESC).

- Development of satellite product descriptor files for use in ascertaining the nature and availability of satellite products and as aid in the physical retrieval of archived satellite products (NESC).

- Development of techniques for the use of satellite data in climatological products (NESC).

FISHERIES PROGRAM (BCF and BSF&W)

- Establishment of a national fisheries data and product network consisting of BCF and BSF&W headquarters, regional BCF facilities, and local BCF and BSF&W facilities for data collection and processing and the preparation and distribution of fishery data products.

- Employment of the fisheries data network for the preparation and distribution of fishery advisories, abundance forecasts, fishery products reports, fishery resource atlases, fishery statistics reports and sportfishing atlases.

- Linking of regional and local BCF and BSF&W facilities by data communication; linking of regional facilities with the Department of the Interior computer center in Washington, D.C., by data communication.

- Installation of computer systems for 8 regional BCF facilities; communication terminals for 6 regional facilities (Honolulu and Auke Bay would communicate by mail) and 11 local facilities; and communication lines among 17 facilities and Washington, D.C.; are required for the fisheries data network.

WATER QUALITY PROGRAM (FWPCA)

- Establishment of increased capabilities for STORET, including generalized file management and information retrieval; inclusion of economic statistics, industrial waste discharge, oil leak and oil spill information in the data base; development of water quality models for use in predicting the effects of pollution.

- Establishment of remote sensor and telemetry systems operating from selected estuaries and transmitting data to the Department of the Interior computer in Washington, D.C. This system would be programmed to automatically detect and report water quality conditions which do not meet standards.

ONSHORE BUOY DATA MANAGEMENT PROGRAM (U.S. COAST GUARD)

- Procedures and systems for storing, processing and distributing data to forecast centers and national data centers after data from the National Data Buoy Network reach shore facilities.

- Procedures for the space-time correlation of buoy data prior to their transmission to forecast centers and national data centers.

- Installation of one shore-based computer system and communication facilities for Mod 0 buoy system and 22 shore-based computer systems and communication facilities for Mod 1 buoy system.

- Increases in the planned buoy reporting frequency after the buoy network has been established.

NATIONAL DATA CENTER PROGRAM

- Establishment of regional offices at 8 university sites to be manned and operated jointly by NODC, NWRC and SOSC personnel, with NODC as lead agency.

- Establishment of data communication links among:
  - NODC, NWRC and FNWC
  - NODC and 8 regional offices
  - NWRC and 8 regional offices
  - SOSC and 8 regional offices
  - NWRC and 14 Weather Bureau offices
- Development of live atlas and ocean and atmospheric models by NODC and NWRC.
- Linking of NODC and NWRC data bases.
- Restructuring of data bases at the 3 centers to store data at various levels (direct access, serial access, and archival--e.g., microfilm).
- Designation of NODC as the developer and maintainer of the master national marine data directory for all marine data.
- Designation of NODC as the national ocean engineering data referral cent for non-defense ocean engineering data.
- Development of a number of data bases at NODC (see Table III-1 for details).
- Creation of an automated marine surface observation file index at NWRC.
- Contribution to the development of coastal and Great Lakes climatological atlases (NWRC).
- Development with NESC of satellite data climatological products (NWRC).
- Development by SOSC of a generalized information and storage retrieval system for the biological specimens which are processed by SOSC.
- Development of marine specimen, data, and bibliographic directory with cross-references among the three items (SOSC).

TECHNICAL DEVELOPMENT PLAN COSTS

Three types of costs are identified in the TDP:

1. total yearly and ten-year agency costs;

2. total ten-year costs which are required in order to implement the entire TDP or a portion of the TDP;

3. total ten-year incremental costs which are required in order to implement the entire TDP or a portion of the TDP.

Costs in categories 2 and 3 have been developed for both programs and agencies. Costs in category 1 appear in Chapter IV of Volume Two for each agency. Incremental costs are not always explicitly shown for each agency in these tables because the purpose of the tables is to show total yearly and ten-year costs. These are the amounts which would have to be funded each year and for the ten-year period FY 71-80 in order to implement the TDP. An agency cost for one year or ten years is the sum of costs of new resources plus the cost of existing activities which are relevant to the TDP. Total ten year costs are also equal to total FY 70 costs plus all increments in costs for personnel, hardware, and other items during FY 71-80.

A summary of the TDP ten-year incremental and total costs is shown in Table III-2 by program and agency. The incremental costs shown in the table are equal to total FY 80 costs minus ten times FY 70 costs. Therefore, an incremental cost is the increase in cost which is required to implement the TDP when current budgets are held constant (level funding). The ten-year incremental costs are computed by program and agency in Table III-3. The information used in the table to compute incremental costs has been obtained from the agency TDP specification exhibits of Chapter IV, Volume Two.

The costs shown in Table III-2 apply to the TDP as summarized in the previous section. This plan is referred to as "Plan C" in order to distinguish it

TABLE III-2
SUMMARY OF TECHNICAL DEVELOPMENT PLAN (PLAN C)
TEN YEAR INCREMENTAL AND TOTAL COSTS

PROGRAM AND AGENCY	TEN YEAR INCREMENTAL COSTS (MILLIONS)	TOTAL TEN YEAR COSTS (MILLIONS)
GREAT LAKES & COASTAL DEVELOPMENT		
• LAKE SURVEY & GREAT LAKES DATA CENTER	$17.390	$23.390
• COASTAL ENGINEERING RESEARCH CENTER	5.130	7.216
	22.520	30.606
MAPPING, CHARTING & MARINE ENVIRONMENT DESCRIPTION		
• NAVAL OCEANOGRAPHIC OFFICE	90.620	211.670
• U.S. COAST & GEODETIC SURVEY	28.320	39.460
• U.S. GEOLOGICAL SURVEY	14.548	48.548
	133.488	299.678
MARINE FORECASTING, RESEARCH & SUPPORT		
• WEATHER BUREAU OFFICES	34.323	38.323
• NAVAL WEATHER SERVICE (MARINE DATA[1] ACQUISITION, TRANSMISSION & PROCESSING)	150.087	265.087
• ESSA (MARINE DATA[1] ACQUISITION, TRANSMISSION & PROCESSING)	57.147	117.147
• NATIONAL ENVIRONMENTAL SATELLITE CENTER	4.419	[illegible].919
	245.976	427.476
FISHERIES		
• BUREAU OF COMMERCIAL FISHERIES & BUREAU OF SPORT FISHERIES & WILDLIFE	24.906	64.196
WATER QUALITY		
• FEDERAL WATER POLLUTION CONTROL ADMINISTRATION	12.690	22.210
ON-SHORE BUOY DATA MANAGEMENT		
• U.S. COAST GUARD	29.869	31.869
NATIONAL DATA CENTERS		
• NATIONAL OCEANOGRAPHIC DATA CENTER	13.082	38.082
• NATIONAL WEATHER RECORDS CENTER	9.468	21.761
• SMITHSONIAN OCEANOGRAPHIC SORTING CENTER	4.111	6.611
	26.661	66.454
TOTALS	$496.130	$942.489

[1] Sea surface temperature, water temperature [illegible] salinity profiles, sea state and surface meteorological parameters [illegible] and merchant and aircraft.

TABLE III-3

COMPUTATION OF INCREASE IN 10-YEAR FUNDING
REQUIRED TO IMPLEMENT TECHNICAL DEVELOPMENT PLAN
(All cost figures are in millions of dollars)

Great Lakes and Coastal Development Program		
• Increase in GLDC data processing funds	$4.370	
• Increase in LS application personnel funds $19.020 (FY 80 Total) - 10 x $.600 (FY 70)	13.020	
•• Total increase in 10-year Lake Survey and GLDC funding		$17.390
• Increase in CERC data processing funds	4.216	
• Increase in CERC application personnel funds $3.774 (FY 80 Total) - 10 x $.286 (FY 70)	.914	
•• Total increase in 10-year CERC funding		5.130
••• Total increase in 10-year program funds		$22.520
Mapping, Charting and Marine Environment Description Program		
• Increase in NAVOCEANO shore-based data processing funds	$8.488	
• Increase in NAVOCEANO shore-based application personnel funds $181.380 (FY 80 Total) - 10 x $12.105 (FY 70)	60.330	
• Increase in NAVOCEANO shipboard data acquisition and processing funds	21.802	
•• Total increase in 10-year NAVOCEANO funding		$90.620
• Increase in C&GS shore-based data processing funds	5.485	
• Increase in C&GS shore-based application personnel funds $19.785 (FY 80 Total) - 10 x $1.114 (FY 70)	8.645	
• Increase in C&GS shipboard data acquisition and processing funds	14.190	
• Total increase in 10-year C&GS funding		28.320
• Increase in USGS data processing funds	3.640	
• Increase in other[1] components of USGS marine data management budget which are required to support TDP $44.908 (FY 80 Total) - 10 x $3.400 (FY 70)	10.908	
•• Total increase in 10-year USGS funding		14.548
••• Total increase in 10-year program funds		$133.488

[1] Primarily application personnel

TABLE III-3 Continued

COMPUTATION OF INCREASE IN 10-YEAR FUNDING
REQUIRED TO IMPLEMENT TECHNICAL DEVELOPMENT PLAN
(All cost figures are in millions of dollars)

Marine Forecasting, Research and Support Program		
• Increase in Weather Bureau Office data acquisition communication and processing funds	31.633	
• Increase in Weather Bureau Office forecasting personnel $6.690 (FY 80 Total) - 10 x $.400 (FY 70)	2.690	
•• Total increase in 10-year Weather Bureau Office funds		34.323
• Increase in Naval Weather Service[1] funds for marine data[2] acquisition, transmission and processing	113.200	
• Estimated increase in other[4] components of Naval Weather Service marine environmental observation and prediction which are required to support the TDP $151.887 (FY 80 Total) - 10 x $11.500 (FY 70)	36.887	
•• Total increase in 10-year Naval Weather Service marine data acquisition, transmission and processing funds		150.087
• Increase in ESSA[3] funds for marine data[2] acquisition, transmission and processing	37.905	
• Estimated increase in other[4] components of ESSA marine environmental observation and prediction which are required to support the TDP $79.242 (FY 80) - 10 x $6.000 (FY 70)	19.242	
•• Total increase in 10-year ESSA marine data[2] acquisition, transmission and processing funds		57.147
• Increase in NESC data processing funds	3.605	
• Increase in other[4] components of NESC marine data $3.314 (FY 80 Total) - 10 x $.250 (FY 70)	.814	
•• Total increase in 10-year NESC funds		4.419
••• Total increase in 10-year program funds		$245.976

[1] FNWC is recommended lead agency
[2] Acquisition, transmission and preliminary processing of sea surface temperature, water temperature, sea state and surface meteorological parameters obtained from ships and aircraft
[3] NMC is recommended lead agency
[4] Primarily application personnel costs

TABLE III-3 Continued

COMPUTATION OF INCREASE IN 10-YEAR FUNDING
REQUIRED TO IMPLEMENT TECHNICAL DEVELOPMENT PLAN
(All cost figures are in millions of dollars)

Fisheries Program		
• Increase in BCF and BSF&W data collection, communication and processing funds	12.251	
• Increase in BCF and BSF&W application personnel funds $51.945 (FY 80 Total) - 10 x $3.939 (FY 70)	12.655	
•• Total increase in 10-year BCF and BSF&W and program funds		$24.906
Water Quality Programs		
• Increase in FWPCA data acquisition, communication and processing funds	9.627	
• Increase in FWPCA application personnel funds $12.583 (FY 80 Total) - 10 x $.952 (FY 70)	3.063	
•• Total increase in 10-year FWPCA and program funds		$12.690
On-Shore Buoy Data Management Program		
• Increase in U.S. Coast Guard data processing and communication funds	29.232	
• Increase in U.S. Coast Guard Data Buoy Project Staff funds $2.637 (FY 80 Total) - 10 x $.200 (FY 70)	.637	
•• Total increase in 10-year U.S. Coast Guard and program funds		$29.869

TABLE III-3 Continued

COMPUTATION OF INCREASE IN 10-YEAR FUNDING
REQUIRED TO IMPLEMENT TECHNICAL DEVELOPMENT PLAN
(All cost figures are in millions of dollars)

National Data Center Program		
• Increase in NODC equipment and software development funds	5.058	
• Increase in other[4] components of NODC operations which are required to support the TDP $33.024 (FY 80 Total) - 10 x $2.500 (FY 70)	8.024	
•• Total increase in 10-year NODC funds		13.082
• Increase in NWRC equipment and software development funds	5.506	
• Increase in other[4] components of NWRC operations which are required to support the TDP $16.282 (FY 80 Total) - 10 x $1.232	3.962	
•• Total increase in 10-year NWRC funds		9.468
• Increase in SOSC equipment and software development funds	3.297	
• Increase in other[4] components of SOSC operations which are required to support the TDP $3.314 (FY 80 Total) - 10 x $.250 (FY 70)	.814	
•• Total increase in 10-year SOSC funds		4.111
••• Total increase in 10-year program funds		$ 26.661
•••• Total increase in 10-year funding required in order to implement Technical Development Plan		$496.110

[4] Primarily applications personnel

from plan A and Plan B, which are described in Chapter VI, Volume One. These are alternate plans which are available in the event that the funds required for the implementation of Plan C are not available. Plan A and Plan B were formulated with the aid of a cost/performance model which is described in Chapter VI, Volume One. These plans have not been developed to the level of detail present in Plan C. The plans are stated in terms of product and data service performance levels and costs. The cost allocation outputs of the model could be employed to formulate additional detailed TDP plans in terms of equipment, personnel and other resources.

Plan C was developed by the methodology described in Chapter II of Volume Two. The ten-year incremental cost ofthis plan is $496 million; the ten-year total cost is $942 million. During the decade FY 71-80, the costs range from $66 million in FY 70 to $111 million in FY 80. The compound annual growth rate of the total yearly budget from FY 70 (the FY 70 priority marine data management budget is estimated to be $44.718 million) to FY 80 is 9 to 10 percent. Ten-year incremental costs of this plan ($496 million) are 5 percent of the ten-year incremental funds ($10 billion) recommended for NOAA by the Marine Commission. The current portion of the total Federal Marine Science Program (FY 70) expended on priority marine data and products is 8.5 percent ($44.7 million out of $528 million).

The allocation of ten-year incremental costs to program areas is shown in Table III-4. The allocation of costs shown in the table could be misleading. The large amount allocated to marine forecasting, research and support would provide benefits to several other program areas in addition to marine forecasting. The mounting of a large-scale surface and subsurface data collection program would also provide benefits to programs in environmental description (data for the production of environmental description products), fisheries (temperature, salinity and meteorological data for fisheries research and

operations), national data centers (a significant new source of data), and coastal development (data collection for the development of coastal atlases and other products).

TABLE III-4

ALLOCATION OF TEN-YEAR INCREMENTAL COSTS TO PROGRAM AREAS

PROGRAM	INCREMENTAL FUNDS ($MILLIONS)	PERCENT
• GREAT LAKES AND COASTAL DEVELOPMENT	$ 22.520	4.54
• MAPPING, CHARTING AND MARINE ENVIRONMENT DESCRIPTION	133.488	26.91
• MARINE FORECASTING, RESEARCH AND SUPPORT	245.976	49.58
• FISHERIES	24.906	5.02
• WATER QUALITY	12.690	2.56
• ONSHORE BUOY DATA MANAGEMENT	29.869	6.02
• NATIONAL DATA CENTERS	26.661	5.37
	$496.110	100.00

Schedules for the implementation of agency development plans are contained in Chapter IV of Volume Two. The implementation priority of the elements of the TDP is specified by the sequence in which activities are scheduled. Requirements for interagency cooperation are indicated in the agency development plans. A mechanism for achieving coordination within the context of the entire marine data network is summarized in the following section and is described in greater detail in Chapter V of Volume Two.

MARINE DATA NETWORK DEVELOPMENT PLANS

To achieve the degree of coordination required to implement the TDP, a mechanism must be established which would be responsive to both day-to-day and long-range planning operations. During the course of the study, SDC found it invaluable to have one central office--the Marine Sciences Council--with which planning and policy formulation could be conducted, and the Data Management Advisory Panel (DMAP). It is therefore recommended that one office be designated for cognizance of policies applicable to marine data management activities, and that DMAP be continued on a permanent basis.

Specific suggested responsibilities for the first office should include the following major areas of responsibility:

-- Monitoring implementation of marine data program improvements to compare the results with objectives.

-- Expediting availability of relevant data program information to the affected marine community, including proprietary, classified, and other marine data.

-- Forecasting data program requirements.

-- Assessing the routing of data among marine data acquisition, processing, and dissemination agencies and the distribution of workloads among the various marine data facilities.

-- Updating the TDP for the national marine data management program to ensure its currency with events.

-- Coordinating marine data and product service operations involving multiple agencies.

-- Fostering the flow of marine data to and among national centers.

-- Improving interagency compatibility.

-- Reducing redundancies in marine data holdings, product generation, and service operations.

-- Facilitating marine data and product inventories and accountability.

It is suggested that the appropriate designation of the first office be within the Executive Office of the President, more particularly in the Marine Sciences Council, unless and until a new office or agency is formed for the purpose of coordinating national marine science activities.

Based upon the nature and scope of these activities, this proposed national coordinating mechanism for marine data management programs should have the capability for providing in an ongoing manner the information necessary for national level:

-- policy planning
-- program planning
-- fiscal planning
-- decision making
-- progress monitoring

The specific responsibilities of the DMAP would be to conduct technical reviews of progress and secure agreement on solutions to problems that arise in the implementation of improved data management programs. For example, the establishment of standards for quality control in the collection of marine data, standards for compatibility of formats in data modification and inventory control, scales for map and chart production, new marine data product specifications, and means for achieving real-time linkages among computer-based files of marine data would be appropriate for this Panel.

IV. AGENCY DEVELOPMENT PLANS
GREAT LAKES AND COASTAL DEVELOPMENT

LAKE SURVEY (LS) AND GREAT LAKES DATA CENTER (GLDC)

Because of the rapid degradation of the Great Lakes region, coupled with the miniscule resources available for data management in this region ($200,000 for FY 70), a significant upgrading of services and augmentation of resources at the Lake Survey and Great Lakes Data Center is proposed over the next decade. The data and products of concern in the Great Lakes Region are indicated below.

- Pollution
  - Pollution Data Base
- Weather and Climatology
  - Ice and Snow Data
  - Ice Atlases and Charts
  - Wave Data
  - Wave Charts
  - Climatological Atlases
- Water Management
  - Water Quantity
    - Lake Water Levels
  - Water Motion
    - Surface Currents Data
    - Surface Currents Charts
    - River Flow Data
- Bathymetry
  - Bathymetric Data Base
  - Bathymetric Maps
  - Recreation Charts

The above data and products have either been unavailable or have been lacking in geographic coverage or in consistency of production. For example, an organized data base of pollution information has not been produced. Recreational craft chart coverage of the Great Lakes has been incomplete (Table IV-1, second page). Improved information for forecasting and describing ice and snow, wave, currents, and water levels conditions are needed for water management, shipping, recreation and Corps of Engineers design and construction projects.

A proposed schedule of implementation for improving and augmenting data and product services is shown in Table IV-1. The resources of the GLDC would be augmented in order to expand its traditional services of inventorying, storing and retrieving data in support of the Lake Survey research, university research, and government research and management (U.S. and Canadian) in the region. In addition, its capabilities to support the traditional activities of the Lake Survey in nautical charting, measurements and predictions, water motion and water characteristics studies, and ice and snow surveys, would be expanded. The climatological products shown in Table IV-1 (e.g., ice atlases and charts and wave charts), are used by the Lake Survey for carrying out its responsibilities with respect to navigation and engineering development and construction on the Lakes. Since these products also consist of forecasts and climatological descriptions used by industry and the public, the responsibilities of the Weather Bureau for forecasts and EDS for climatological publications is involved. A joint effort between Lake Survey and ESSA will be required for producing these products. It is recommended that the Lake Survey be designated as the lead agency for this effort.

The major Great Lakes data base requirements for the decade which can be quantified are shown in Table IV-2. No new technological problems are presented by the requirement for storing and maintaining these data bases. The Technical Development Plan is presented in Tables IV-3 and IV-4. The major shore-based hardware and software requirements pertain to equipment and programs for data base creation, maintenance, and digital plotters for chart and map plotting.

TABLE IV-1

LAKE SURVEY AND GREAT LAKES REGIONAL DATA CENTER
GREAT LAKES PRIORITY PRODUCTS AND DATA

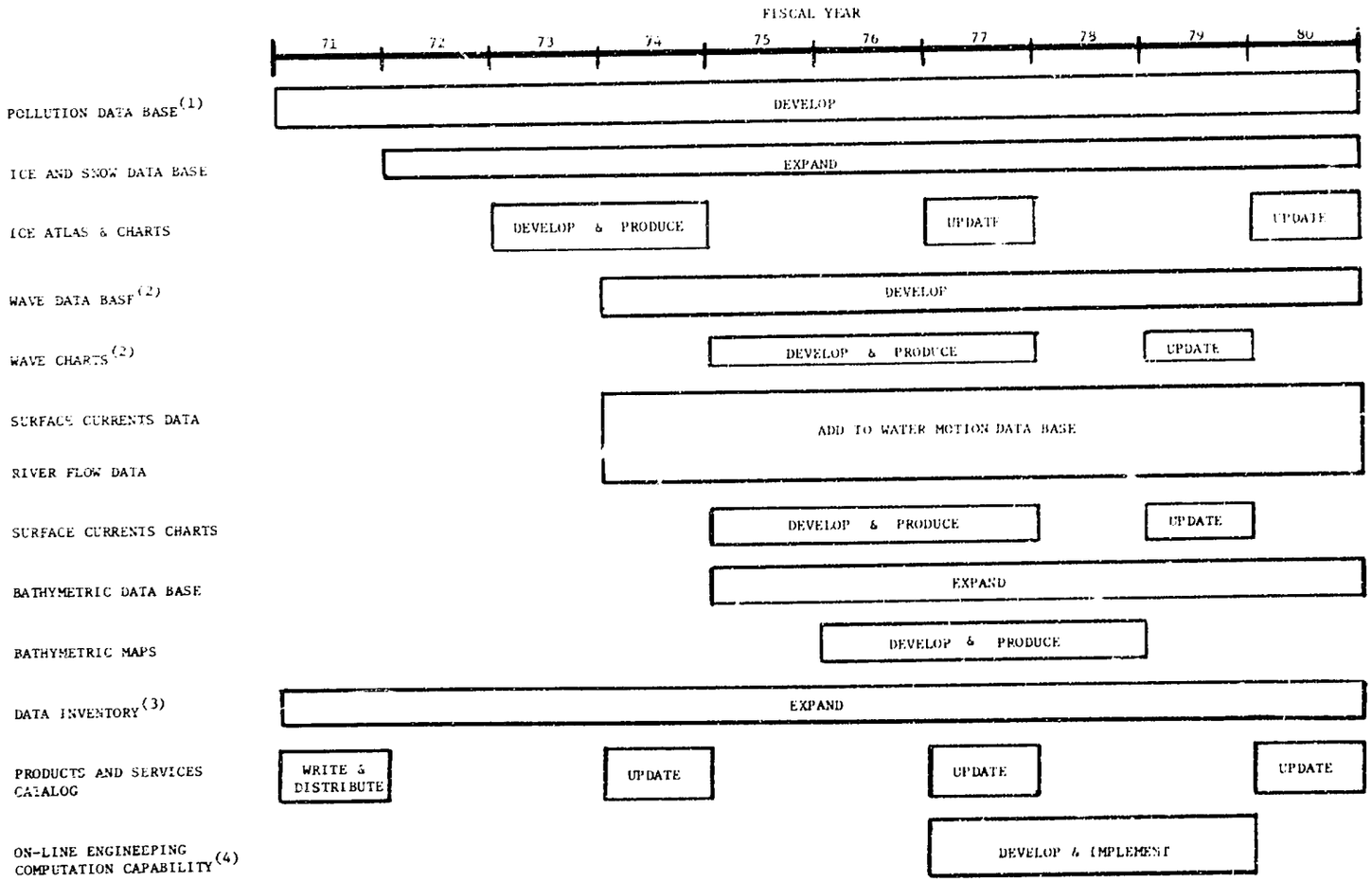

(1) Some data would be provided by FWPCA and the Great Lakes states.
(2) Some data would be provided by CERC.
(3) Presently contains four million entries.
(4) For hydraulics and hydrology modeling.

TABLE IV-1 (Continued)

LAKE SURVEY AND GREAT LAKES REGIONAL DATA CENTER
GREAT LAKES PRIORITY PRODUCTS AND DATA

	FISCAL YEAR									
	71	72	73	74	75	76	77	78	79	80
GREAT LAKES CLIMATOLOGICAL ATLAS									DEVELOP AND PRODUCE	
INCREASE RECREATION CHART COVERAGE (PERCENT)	10	20	30	40	50	60	70	80	90	100

PRESENT RECREATION CRAFT CHART COVERAGE OF SHORELINE AND WATERWAYS	(PERCENT)
LAKE SUPERIOR	0
LAKE MICHIGAN	10
LAKE HURON	5
LAKE ST. CLAIR	100
LAKE ERIE	15
LAKE ONTARIO	0
OVERALL - GREAT LAKES	10

TABLE IV-2

LAKE SURVEY AND GREAT LAKES REGIONAL DATA CENTER
EXAMPLES OF GREAT LAKES PRIORITY DATA BASES

MAJOR DATA BASE REQUIREMENTS

	FISCAL YEAR									
	71	72	73	74	75	76	77	78	79	80
WATER QUANTITY DATA BASE(1)										
DATA POINTS(2) (M)	6.84	7.18	7.54	7.92	8.32	8.74	9.18	9.64	10.12	10.63
CUMULATIVE DATA POINTS (M)	6.84	14.02	21.56	29.48	47.80	46.54	55.72	65.36	75.48	86.11
CUMULATIVE CHARACTERS (B)	.103	.210	.323	.442	.567	.698	.836	.980	1.132	1.292
NUMBER OF TAPE REELS	6	11	17	23	29	35	42	49	57	65
WATER MOTION DATA BASE(3)										
DATA POINTS(4) (K)	87.4	91.8	96.4	101.2	106.3	11.6	117.2	123.1	129.3	135.8
CUMULATIVE DATA POINTS (K)	87.4	179.2	275.6	376.8	483.1	594.7	711.9	826.8	956.1	1093.9
CUMULATIVE CHARACTERS (M)	3.06	6.27	9.65	13.19	16.91	20.81	24.92	28.94	33.46	38.29
NUMBER OF TAPE REELS	1	1	1	1	1	2	2	2	2	2
DATA INVENTORY										
ENTRIES (M)	4.0	4.2	4.4	4.6	4.9	5.1	5.4	5.6	5.9	6.2
CHARACTERS (M)	400	420	440	460	490	510	540	560	590	620
CUMULATIVE CHARACTERS (B)	.40	.82	1.26	1.72	2.21	2.72	3.26	3.82	4.41	503
NUMBER OF TAPE REELS	20	41	63	86	111	136	163	191	221	252

OTHER DATA BASES
(SMALL; LESS THAN A TAPE REEL PER YEAR EACH)

WATER CHARACTERISTICS (NANSEN CASTS).
ICE AND SNOW (ICE CORES - THICKNESS, DENISITY AND TYPE).
SHORE PROCESSES (BOTTOM SAMPLES, CORES, DREDGE AND GRAB SAMPLES).

(1) PRECIPTITATION, WATER TEMPERATURE AND WATER LEVEL.

(2) ASSUMES 15 CHARACTER READINGS EVERY 5 MINUTES, 365 DAYS PER YEAR FROM 65 STATIONS AND 5 PERCENT ANUUAL GROWTH RATE IN READINGS.

(3) WIND SPEED AND DIRECTIONS, HUMIDITY, AIR TEMPERATURE, WATER TEMPERATURE AND SOLAR RADIATION.

(4) ASSUMES 35 CHARACTER READINGS EVERY 6 MINUTES, 182 DAYS PER YEAR FROM 2 STATIONS AND 5 PERCENT ANNUAL GROWTH RATE IN READINGS.

B = BILLIONS M = MILLIONS K = THOUSANDS

TABLE IV-3

TECHNICAL DEVELOPMENT PLAN SPECIFICATION - LAKE SURVEY AND GREAT LAKES DATA CENTER SYSTEM - PRIORITY PRODUCTS AND DATA NEW HARDWARE, SOFTWARE AND COMPUTER OPERATIONS REQUIREMENTS

FY	ACTIVITY*	HARDWARE REQUIREMENTS	HARDWARE PURCHASE COSTS (MILLIONS)	SOFTWARE DEVELOPMENT REQUIREMENTS	SOFTWARE[1] MAINTENANCE REQUIREMENTS	SOFTWARE PERSONNEL	SOFTWARE PERSONNEL COSTS[2] (MILLIONS)	COMPUTER OPERATIONS PERSONNEL	COMPUTER OPERATIONS PERSONNEL COSTS[3] (MILLIONS)	TOTAL ANNUAL DATA PROCESSING COST[4] (MILLIONS)
71	(1) POLLUTION DATA BASE DEVELOPMENT (2) EXPAND DATA INVENTORY (3) RECREATION CRAFT CHART UPDATING; CHART AND MAP FORMATIING (3.1) INCREASE RECREATION CRAFT CHART COVERAGE	(1) to (12) 1 PROCESSOR AND AUXILIARY EQUIPMENT 1 CRT (3.1) 2 SHIPBOARD SOUNDINGS A/D CONVERTERS	$1.032	(1) DATA BASE SOFTWARE (5K INSTRUCTIONS) (2) SOURCE DATA INDEX (10K INSTRUCTIONS) (3) CRT LIGHT PEN PROGRAMS (15K INSTRUCTIONS)		9	$.135	10	$.100	$1.267
72	(4) CHART & MAP PLOTTING. GRAPHIC INPUT, A/D CONVERSION (5) EXPAND ICE AND SNOW DATA BASE	(3) (4) 3 CRTs 1 X-Y TABLE PLOTTER 1 GRAPHIC INPUT UNIT 1 A/D CONVERTER (3.1) 2 SHIPBOARD SOUNDINGS A/D CONVERTERS	.477	(1) (2) (3) (4) PLOTTING, GRAPHIC INPUT & A/D SOFTWARE (20K INSTRUCTIONS) (5) DATA BASE SOFTWARE (5K INSTRUCTIONS)		16	.240	10	.100	.817
73	(6) DEVELOP ICE ATLAS & CHARTS	(3.1) 2 SHIPBOARD SOUNDINGS A/D CONVERTERS	.200	(4) (5) (6) ATLAS & CHART SOFTWARE (5K INSTRUCTIONS)	(1) (2) (3)	9	.135	10	.100	.435
74	(7) DEVELOP WAVE DATA BASE ADD SURFACE CURRENTS & RIVER FLOW DATA TO WATER MOTION DATA BASE			(6) (7) DATA BASE SOFTWARE (5K INSTRUCTIONS)	(1) (2) (3) (4) (5)	7	.105	10	.100	.205
75	(8) DEVELOP & PRODUCE SURFACE CURRENT CHARTS; DEVELOP WAVE CHARTS (9) EXPAND BATHYMETRIC DATA BASE	(3) (4) 1 CRT	.029	(7) (8) CHART SOFTWARE (10K INSTRUCTIONS) (9) DATA BASE SOFTWARE (5K INSTRUCTIONS)	(1) (2) (3) (4) (5) (6) (7)	9	.135	10	.100	.264
76	(10) DEVELOP & PRODUCE BATHYMETRIC MAPS			(8) (9) (10) MAP SOFTWARE (5K INSTRUCTIONS)	(1) (2) (3) (4) (5) (6) (7)	8	.120	10	.100	.220
77	(11) DEVELOP ON-LINE ENGINEERING COMPUTATION CAPABILITY	(3.1) 2 SHIPBOARD SOUNDINGS A/D CONVERTERS	.200	(10) (11) ON-LINE TERMINAL SOFTWARE (30K INSTRUCTIONS)	(1) (2) (3) (4) (5) (6) (7) (8) (9)	10	.150	10	.100	.450
78		(11) 1 CRT	.029	(11)	(4) (5) (6) (7) (8) (9) (10)	9	.135	10	.100	.264
79	(12) DEVELOP & PRODUCE CLIMATOLOGICAL ATLAS			(11) (12) ATLAS SOFTWARE (5K INSTRUCTIONS)	(6) (7) (8) (9) (10)	9	.135	10	.100	.235
80	(13) PROVIDE FOR DATA COMMUNICATION WITH OTHER ORGANIZATIONS	(11) 1 CRT (13) 1 TERMINAL ADAPTOR	.038	(12)	(7) (8) (9) (10) (11)	5	.075	10	.100	.213
TEN YEAR TOTALS (MILLIONS)			$2.005				$1.365		$1.000	$4.370

* Initiation of Improved Product/Service or New Product/Service

1. Numbers in parenthesis () indicate programs for which maintenance requirements exist.
2. Priced at $15,000 per annum per man year.
3. Priced at $10,000 per annum per man year.
4. Hardware cost and software personnel cost and computer operations personnel cost.

NOTE: Number in parenthesis associate related items, e.g., hardware is required in FY 71 for activities (1) through (12); data base software is required in FY 71 and FY 72 for a Pollution data base, personnel requirements are noncumulative.

TABLE IV-4

TECHNICAL DEVELOPMENT PLAN SPECIFICATION - LAKE SURVEY AND GREAT LAKES DATA CENTER SYSTEM PRIORITY PRODUCTS AND DATA - FUTURE PERSONNEL REQUIREMENTS FOR EXISTING ORGANIZATION COMPONENTS

FY	APPLICATIONS PERSONNEL					TOTAL APPLICATIONS PERSONNEL COST (MILLIONS)	TOTAL ANNUAL BUDGET (MILLIONS)
	NAUTICAL CHART MAINTENANCE	NAUTICAL CHART COMPILATION	HYDROGRAPHIC SURVEY CREWS	ATLAS/CHART DEVELOPMENT & PRODUCTION(1)	TOTAL APPLICATIONS PERSONNEL		
71	6	14	22	--	42	$ .630	$1.897
72	7	25	40	--	72	1.080	1.897
73	7	38	59	15	119	1.785	2.220
74	8	39	62	16	125	1.875	2.080
75	8	42	66	18	134	2.010	2.274
76	9	42	66	20	137	2.055	2.275
77	9	45	70	21	145	2.175	2.625
78	10	45	70	23	148	2.220	2.484
79	11	50	79	24	164	2.460	2.695
80	12	56	88	26	182	2.730	2.943
TEN YEAR TOTALS						$19.020	$23.390

(1) Ice Atlas and Charts, Wave Charts, Surface Currents Charts, Bathymetric Maps and Climatological Atlas.

(2) Priced at $15,000 per annum per man year.

(3) Total data processing cost plus total applications personnel cost.

Launch equipment for converting soundings from analog to digital format would contribute to significantly increasing the recreational craft chart coverage and bathymetric surveying of the Great Lakes. The total ten-year cost for data processing is $4,370,000. The ten-year requirements for non-data processing, or applications personnel, is shown in Table IV-4. A significant increase in personnel for nautical chart compilation and hygrographic survey crews has been planned in order to accomplish the required increase in geographic coverage for recreation charts indicated in Table IV-1. Also, new personnel requirements are created by the need to develop and produce a climatological atlas for the Great Lakes. The EDS would be a contributor to this effort, by furnishing a portion of the required data. The States in the region should also be involved in the publication of a climatological atlas. A cost-sharing arrangement between the States and Federal agencies for the publication of the atlas might be appropriate. The total applications personnel cost for the decade is $19,020,000, which then added to the data processing cost, requires a ten-year expenditure of $23,390,000.

The proposed computer system for the GLDC, with the fiscal years in which components would be acquired, is shown in Figure IV-1. The specifications for this equipment are presented in Table IV-5.

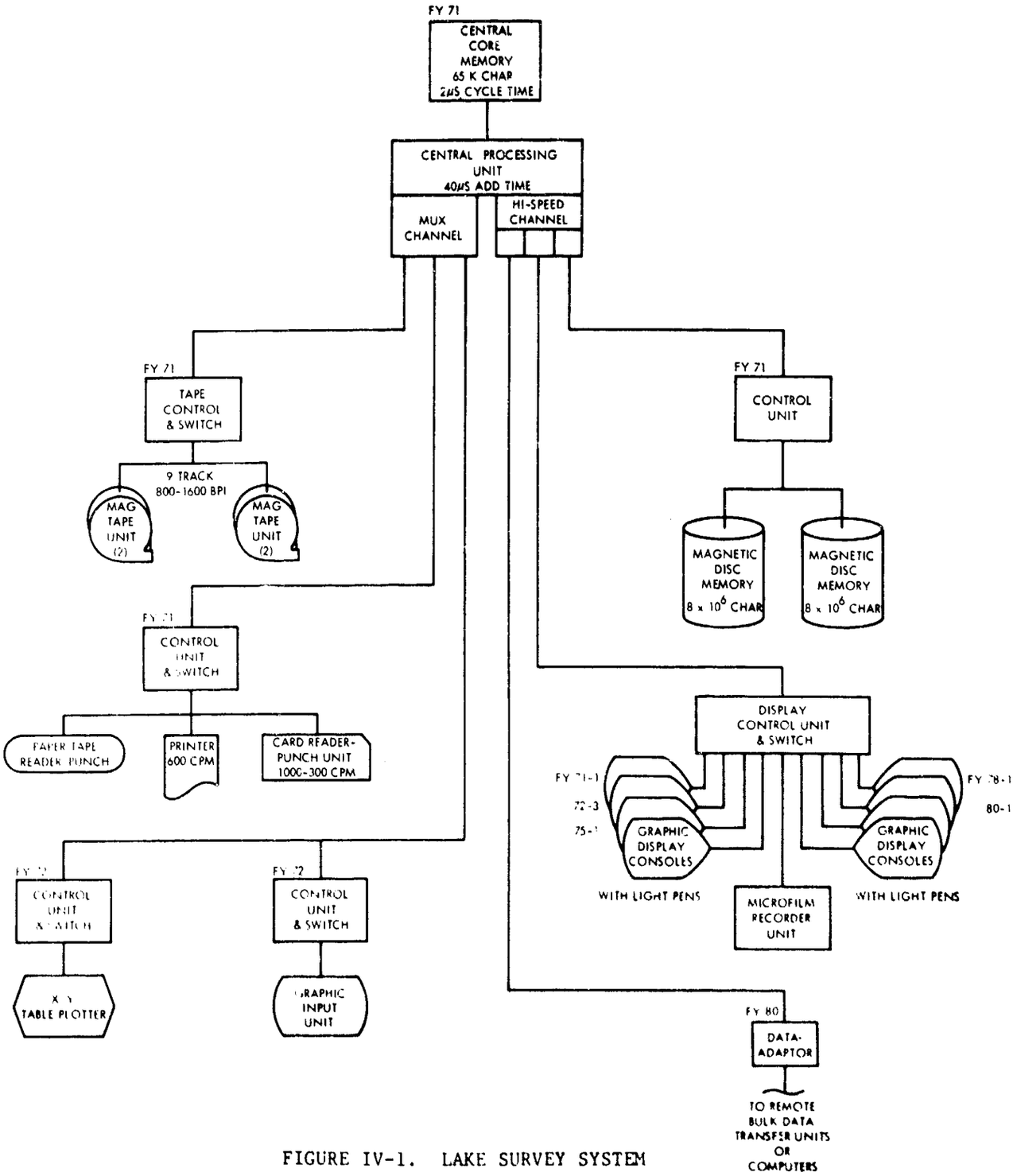

FIGURE IV-1. LAKE SURVEY SYSTEM

TABLE IV-5

DATA PROCESSING HARDWARE SPECIFICATION
AGENCY: LAKE SURVEY AND GREAT LAKES REGIONAL DATA CENTER

	FY 71	FY 72	FY 73	FY 74	FY 75	FY 76	FY 77	FY 78	FY 79	FY 80
INPUT										
NUMBER AND TYPE INPUT RATE (1)	1 CARD READER 600 CPM	1 GRAPHIC CURVE FOLLOWER			1 GRAPHIC CRT			1 GRAPHIC CRT		1 GRAPHIC CRT
NUMBER AND TYPE INPUT RATE	1 PAPER TAPE READER 1000 CHAR/SEC									
NUMBER AND TYPE INPUT RATE	1 GRAPHIC CRT CONSOLE	3 GRAPHIC CRT CONSOLE								1 DATA ADAPTOR 230K BITS/SEC
NUMBER AND TYPE INPUT RATE	2 SHIPBOARD A/D CONVERTERS	2 SHIPBOARD A/D CONVERTERS	2 SHIPBOARD A/D CONVERTERS					2 SHIPBOARD A/D CONVERTERS		
STORAGE										
NUMBER AND TYPE CAPACITY ACCESS TIME TRANSFER RATE (2)	2 MAGNETIC DISK UNIT 8 x 5.7 GB 175 MS 156K CHAR/SEC									
NUMBER AND TYPE CAPACITY ACCESS TIME TRANSFER RATE	4 MAGNETIC TAPE 800-1600 BPI [illegible] MIN [illegible] CHAR/SEC									
PROCESSOR										
NUMBER ARITHMETIC SPEED STORAGE CAPACITY STORAGE CYCLE TIME	1 CPU 39 [illegible] ADD 65K CHARACTERS 1.5 [illegible]									
NUMBER ARITHMETIC SPEED STORAGE CAPACITY STORAGE CYCLE TIME										
OUTPUT										
NUMBER AND TYPE OUTPUT RATE (3)	1 PRINTER [illegible] LPM	1 GRAPHIC X-Y PLOTTER 200 INCH/SEC								
NUMBER AND TYPE OUTPUT RATE	1 CARD PUNCH 300 CPM									
NUMBER AND TYPE OUTPUT RATE	1 MICROFILM RECORDER 30 FRAMES/SEC									

(1) To processor (2) To/from processor (3) From processor

COASTAL ENGINEERING RESEARCH CENTER (CERC)

An important requirement for aiding research for the design of coastal structures and beach restoration projects is a wave gauge network along the coasts of the United States, including Hawaii, Alaska and the Great Lakes. Such a network has been proposed by the CERC. In addition to its use as a source of historical data for coastal development, such a network would have equal value to the U.S. Weather Bureau for coastal weather, wave and surf monitoring, warnings, and forecasts. The proposed wave data acquisition and processing network is shown in Figure IV-2. The aspects of this network relevant to CERC are discussed in this section. The use of this network by Weather Bureau offices is described in the Weather Bureau section under Marine Forecasting, Research and Support. The wave gauge network would be expanded from the several stations which currently telemeter data from the Atlantic City Pier to CERC to approximately 100 over the decade. It is suggested that the wave gauge installations be made permanent for the use of both CERC and the Weather Bureau, with the two agencies sharing the cost of the wave gauge network. It is understood that CERC plans to expand the automatic acquisition and telemetering of wave data to other locations. The total number of near-future wave stations is approximately 10, with 3 gauges installed at each location in order to obtain direction information in addition to wave heights. Ten stations are shown in Figure IV-2 to be in place by FY 71 along the Atlantic coast. Automatic transmission of data over telephone lines to CERC is shown for these 10 stations in the diagram. This would be accomplished by providing voltage controlled sub-carrier oscillators for each gauge at a station. The resultant frequency modulated signals are multiplexed and frequency modulate a telephone line carrier. The transmitted signal is demodulated at the receiving end and sub-carrier discriminators recover the three original sensor signals from the multiplexed signal.

These analog signals are then converted to digital data under the on-line control of an analog to digital converter and control unit which receives its commands

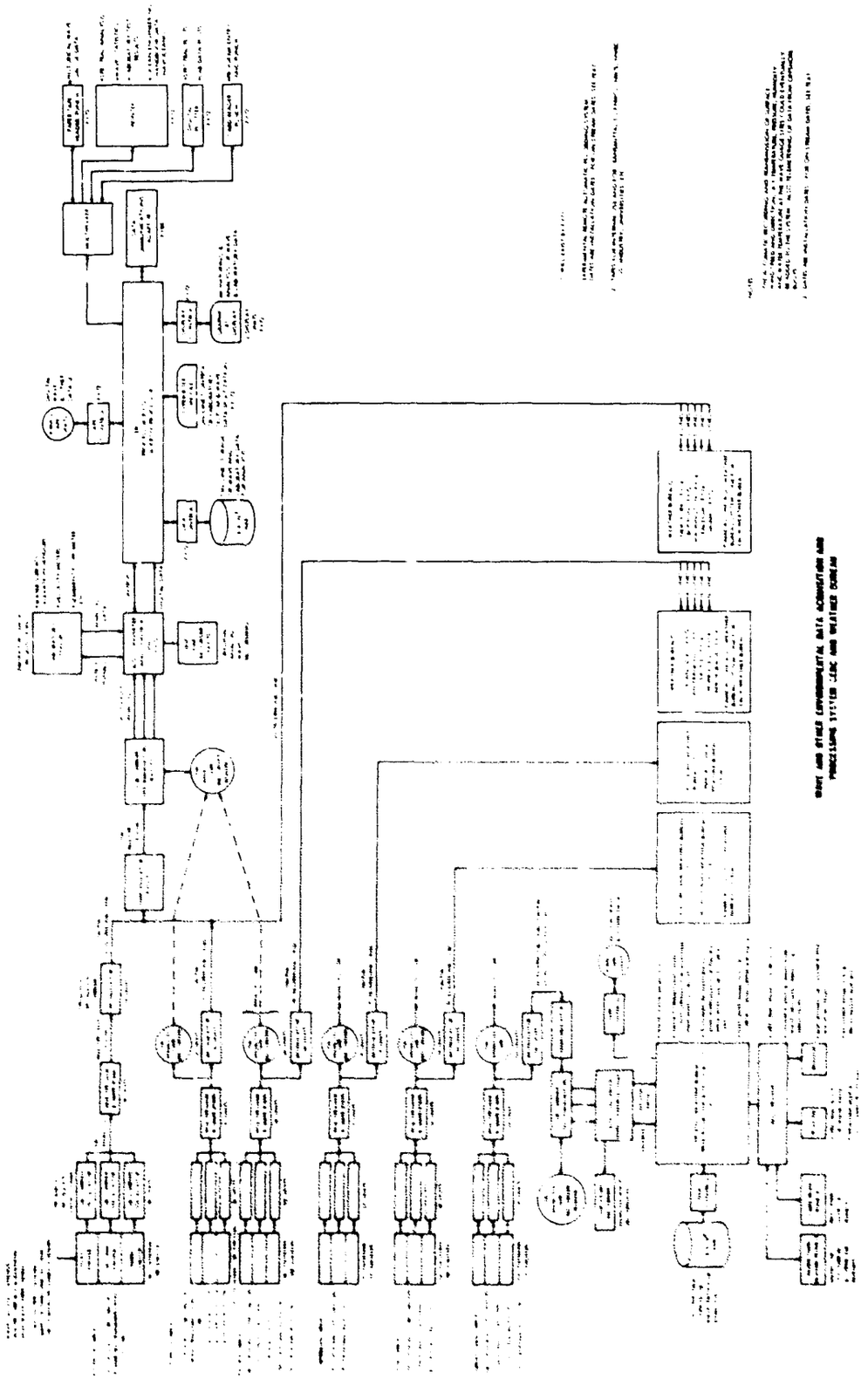

FIGURE IV-2

WAVE AND OTHER ENVIRONMENTAL DATA ACQUISITION AND PROCESSING SYSTEM
COASTAL ENGINEERING RESEARCH CENTER AND WEATHER BUREAU

from a digital computer. The A/D conversion is controlled by software statements executed in the digital computer. This type of data reduction arrangement is recommended because it provides the capability of remote control of the readout time, frequency, duration and sampling rate of the analog wave sensors. This arrangement will provide complete control of data acquisition, digitization and analyses at CERC. Additionally, such an arrangement allows in-house CERC laboratory data acquisition equipment (water surface elevation sensors, velocity meters, sediment flow meters, etc.) to be remotely controlled by the test operator in CERC.[1] The great flexibility provided by the control of analog recording, digitization and data reduction which is afforded by a hybrid complex can be brought to bear on the in-house data reduction and analysis problems.

"A limited on-line wave data acquisition system of 10 stations is proposed in this TDP for CERC. The remaining stations in the network (89) would record the data at the station on FM analog tape for mail transmission to CERC. The tapes can be reduced with the same equipment as provided for on-line receipt of data and the equipment described previously would still be available for on-line control and monitoring of laboratory experiments. For Weather Bureau coastal weather wave and surf monitoring and forecasting, a real-time mode of operation is recommended. The 10-year TDP for CERC is shown in Table IV-6. The equipment, software and software personnel are for the applications already described. The details of hardware characteristics are shown in Table IV-7.

The ten-year data processing cost is $4,216,000. Software personnel requirements include mathematicians in addition to programming personnel. It is estimated that the FY 71 cost of engineering and scientific personnel involved in wave analysis, littoral processes analysis, sediment evaluation and laboratory data analysis is approximately $300,000 and will grow by a compound annual

[1] An example of a process control computer which is capable of this mode of operation is the IBM 1800 System.

TABLE IV-6

TECHNICAL DEVELOPMENT PLAN SPECIFICATION - COASTAL ENGINEERING RESEARCH CENTER SYSTEM - PRIORITY PRODUCTS AND DATA - NEW HARDWARE, SOFTWARE AND COMPUTER OPERATIONS REQUIREMENTS

FY	ACTIVITY*	HARDWARE REQUIREMENTS	HARDWARE PURCHASE COSTS (MILLIONS)	SOFTWARE DEVELOPMENT REQUIREMENTS	SOFTWARE[1] MAINTENANCE REQUIREMENTS	SOFTWARE PERSONNEL	SOFTWARE PERSONNEL COSTS[2] (MILLIONS)	COMPUTER OPERATIONS PERSONNEL	COMPUTER OPERATIONS PERSONNEL COSTS[3] (MILLIONS)	TOTAL ANNUAL DATA ACQUISITION AND PROCESSING COST[4] (MILLIONS)
71	INITIATE DEVELOPMENT OF SOFTWARE FOR IN-HOUSE PROCESSOR			(1) GENERAL PURPOSE SCIENTIFIC DATA PROCESSING (128 INSTRUCTIONS PER YEAR) (2) LABORATORY DATA AND (3) WAVE DATA A/D CONVERSION AND CONTROL (15K INSTRUCTIONS)		10	$.150			$.150
72	PROVIDE IN-HOUSE DATA PROCESSING FOR: (1) GENERAL PURPOSE SCIENTIFIC DATA PROCESSING (2) LABORATORY DATA ACQUISITION AND ANALYSIS (3) FIELD WAVE GAUGE DATA ACQUISITION (4) WAVE DATA ANALYSIS (5) LITTORAL PROCESSES EVALUATION (6) SEDIMENT SIZE PARAMETER EVALUATION (7) STATISTICAL TABULATION OF ENVIRONMENTAL DATA	(1) to (12) 1 PROCESSOR AND ASSOCIATED EQUIPMENT	$.957[a]	(1) (2) (3)	(1)	10	.150	10	$.100	1.207
	(8) INSTALL 29 WAVE GAUGE STATIONS: 2 ATLANTIC 3 PACIFIC 9 CARIBBEAN 8 GULF 7 GREAT LAKES	(8) 87 WAVE GAUGES 29 FM ANALOG TAPE UNITS	.261[b] .029	(1)						.290
73	(9) DEVELOP GRAPHICS SOFTWARE FOR: (1),(2),(3),(5) & (7)			(1) (9) GRAPHICS SOFTWARE (10K INSTRUCTIONS)	(1) (2) (3)	11	.165	10	.100	.265
74	(10) INSTALL 39 WAVE GAUGE STATIONS: 7 ATLANTIC 20 PACIFIC 12 GREAT LAKES	(10) 117 WAVE GAUGES 39 FM ANALOG TAPE UNITS	.351[b] .039	(1) (9)	(1) (2) (3)	11	.165	10	.100	.655
75	(11) DEVELOP COASTAL OCEAN ENGINEERING DATA BASE & OUTPUTS FOR HANDBOOK			(1) (11) OCEAN ENGINEERING SOFTWARE (5K INSTRUCTIONS)	(1) (2) (3) (9)	10	.150	10	.100	.250
76	(12) INSTALL WAVE GAUGE STATIONS: 3 ATLANTIC 8 PACIFIC	(12) 33 WAVE GAUGES 11 FM ANALOG TAPE UNITS	.099[b] .011	(1) (11)	(1) (2) (3) (9)	11	.165	10	.100	.375
77				(1)	(1) (2) (3) (9) (11)	11	.165	10	.100	.265
78				(1)	(1) (9) (11)	10	.150	10	.100	.250
79				(1)	(1) (9) (11)	10	.150	10	.100	.250
80	(13) PROVIDE FOR DATA COMMUNICATION WITH OTHER ORGANIZATIONS	(13) DATA COMMUNICATION ADAPTOR	.009	(1)	(1) (11)	10	.150	10	.100	.259
TEN YEAR TOTAL (MILLIONS)			$1.756				$1.560		$.900	$4.216

* Initiation of Activity

a. A/D converter & control unit, 1 processor, 1 disc control, 1 disc storage unit, 1 typewriter console, 1 CRT display control, 2 graphic CRTs, 1 tape control, 4 magnetic tape units, 1 paper tape reader/punch, 1 printer, 1 plotter, 1 card reader/punch

b. Cost sharing with Weather Bureau; 50 percent of cost allocated to CERC

1. Numbers in parenthesis indicate programs for which maintenance requirements exist.

2. Priced at $15,000 per annum per man year.

3. Priced at $10,000 per annum per man year.

4. Hardware cost and software personnel cost and computer operations personnel cost.

NOTE: Numbers in parentheses associate related items, e.g., hardware is required in FY 72 for activities (1) through (12). Software development for general purpose scientific data processing is required in FY 1971 through FY 80.

TABLE IV-7

DATA PROCESSING HARDWARE SPECIFICATION
AGENCY: COASTAL ENGINEERING RESEARCH CENTER

	FY 71	FY 72	FY 73	FY 74	FY 75	FY 76	FY 77	FY 78	FY 79	FY 80
INPUT										
NUMBER AND TYPE INPUT RATE(1)		1 CARD READER 1000 LPM								1 DATA ADAPTOR 230K BITS/SEC
NUMBER AND TYPE INPUT RATE		1 KEYBOARD-PRINTER 10 CPS								
NUMBER AND TYPE INPUT RATE		1 PAPER TAPE READER 1000 CPS								
NUMBER AND TYPE INPUT RATE		1 A/D CONVERTER 10,000 CONV/SEC								
STORAGE										
NUMBER AND TYPE CAPACITY ACCESS TIME TRANSFER RATE(2)		4 MAGNETIC TAPE UNITS @ 800-1600 BPI 2 MIN 30K CHAR/SEC								
NUMBER AND TYPE CAPACITY ACCESS TIME TRANSFER RATE		1 DISC UNIT @ 8×10^6 CHAR 175 MS 156K CHAR/SEC								
PROCESSOR										
NUMBER ARITHMETIC SPEED STORAGE CAPACITY STORAGE CYCLE TIME		1 CPU 1.3μs ADD 132K CHARACTERS 1 μs								
OUTPUT										
NUMBER AND TYPE OUTPUT RATE(3)		1 PAPER TAPE PUNCH 100 CHAR/SEC								
NUMBER AND TYPE OUTPUT RATE		1 PRINTER 1000 LPM								
NUMBER AND TYPE OUTPUT RATE		1 DIGITAL PLOTTER 200 INCR/SEC								
NUMBER AND TYPE OUTPUT RATE		1 CARD PUNCH 300 CPM								

(1) To processor (2) To/from processor (3) From processor

rate of 5 percent to a sum of $466,000 by FY 1980. Therefore, the total estimated FY 71 priority and data product cost is $.450 (.150 + .300) million and $.725 (.259 + .460) million for FY 80.

NAVAL OCEANOGRAPHIC OFFICE (NAVOCEANO)

Existing major priority products of NAVOCEANO include nautical charts (foreign country coverage), Notice to Mariners, sea surface temperature atlases, ice atlases, ocean station atlases, pilot charts, climatological atlases, sound velocity atlases, thermocline depth charts, and marine geology atlases. Recommended new products are ocean engineering reports and handbooks (with contribution from CERC for coastal wave sediment transport, beach erosion data, structures design data, etc.). The Navy contribution would consist of any releasable data on submersible design criteria, test results, correlation of design objectives with test results and environmental data. The Naval Ship Systems Command and the Maritime Administration could furnish data on naval and merchant ship design, respectively.

The major needs for NAVOCEANO product and service improvement include:

- Reducing the time interval between nautical chart updates.
- Increasing the nautical chart and bathymetric map coverage of foreign waters.
- Increasing the currency of information in Notice to Mariners
- Providing data management systems for converting, storing and retrieving huge volumes of bathymetric, magnetic and gravity data.

In order to meet these objectives, a ten-year TDP has been formulated which provides for:

- Reducing the time interval between nautical chart updates from 36 to 6 months (see Table IV-8).

TABLE IV-8

NAVOCEANO SYSTEM PRIORITY PRODUCTS AND DATA

PRODUCT IMPROVEMENT	FY 71	FY 72	FY 73	FY 74	FY 75	FY 76	FY 77	FY 78	FY 79	FY 80
REDUCE TIME INTERVAL BETWEEN UPDATING NAUTICAL CHARTS (MONTHS)	36	30	24	24	18	18	12	12	6	6
INCREASE NAUTICAL CHART AND BATHYMETRIC MAP COVERAGE FOR AREAS REQUIRING 1:75,000 SCALE OR LARGER (PER CENT)	25	30	35	40	45	50	55	60	70	75
REDUCE DELAY TIME FOR INPUT TO NOTICE TO MARINERS (WEEKS)	8	6	6	4	4	4	2	2	2	1
NEW PRODUCT OCEAN ENGINEERING HANDBOOK			DEVELOP & PRODUCE			UP-DATE				UP-DATE
MAJOR DATA BASE REQUIREMENTS (EXCLUDING NODC BASES)										
NEW BATHYMETRIC DATA GENERATION AND STORAGE REQUIREMENTS* (DIGITAL DATA FROM SEA)										
SOUNDINGS (M)	200	200	200	200	200	500	500	500	500	500
BITS (B)	20	20	20	20	20	50	50	50	50	50
CUMULATIVE BITS (B)	20	40	60	80	100	150	200	250	300	350
CUMULATIVE CHARACTERS (B)	3.3	6.6	10.0	13.3	16.7	25.0	33.3	41.7	50.0	58.3
NUMBER OF TAPE REELS**	165	333	500	667	833	1267	1734	2167	2601	3068
NEW MAGNETIC DATA GENERATION AND STORAGE REQUIREMENTS* (DIGITAL DATA FROM SEA)										
DATA POINTS (M)	8	20	60	60	60	100	100	100	100	100
BITS (B)***	.8	2	6	6	6	10	10	10	10	10
CUMULATIVE BITS (B)	.8	2.8	8.8	14.8	20.8	30.8	40.8	50.8	60.8	70.8
CUMULATIVE CHARACTERS (B)	.13	.47	1.47	2.47	3.47	5.14	6.80	8.47	10.14	13.14
NUMBER OF TAPE REELS	17	23	74	127	174	260	340	427	507	594
NUMBER OF DATA REQUESTS	300	350	400	450	500	550	600	650	700	750
NEW GRAVITY DATA GENERATION AND STORAGE REQUIREMENTS* (DIGITAL DATA FROM SEA)										
OBSERVATIONS (K)	500	500	500	500	500	700	700	700	700	700
BITS (M)***	54	54	54	54	54	167	167	167	167	167
CUMULATIVE BITS (M)	54	107	160	213	267	334	400	467	534	600
CUMULATIVE CHARACTERS (M)	8.7	18.0	26.7	35.4	44.7	55.4	66.7	78.0	88.7	100
NUMBER OF TAPE REELS	7	7	14	14	20	27	34	40	47	54

* Only small portion of data base active at any one time.

** Does not imply a recommendation to store data on magnetic tape: presented as an indication of data base size.

*** Approximately 100 bits of Binary Code assumed to represent one sounding, one magnetic data point, or one gravity data point.

K = THOUSANDS M = MILLIONS B = BILLIONS

- Increasing nautical chart coverage of charts of 1:75,000 scale or larger from 25 percent to 75 percent. This recommendation is contingent on obtaining permission of foreign governments for the required survey work. Friendly governments may present no problem and neutral governments may be induced to cooperate by way of exchange agreements as currently practiced by NAVOCEANO, i.e., training of foreign hydrographers in return for mapping and charting their waters.

- Reducing the delay for incorporating navigation obstructions and aids in the publication of Notice to Mariners from eight weeks to one week.

- Increasing the utilization of automation in chart maintenance and correction operations.

- Expanding bathymetric, magnetic and gravity data library indices.

Concerning the last item, it is clear from an examination of Table IV-9 that if only new volumes of geophysical data are considered, the amount of data to be stored is significant. Most of this data is relatively inactive, being required only when a map, chart, atlas, or analysis is required which involves the use of the data. However, given the size of the data bases, the automated indices are essential to providing quick access to data stored on-line or in the tape libraries.

It is recommended that the existing backlog of 40 million soundings not be digitized en masse since so much of NAVOCEANO geographic area of responsibility requires mapping at larger scales. Rather, it is recommended that existing soundings be selectively digitized by a semi-automatic curve follower. A manually controlled curve follower is provided in the recommended system for this type of input. Instead of investing considerable resources for the reduction of backlog, a high priority should be assigned to provide all new hydrographic survey ships with A/D conversion and computing equipment in order to capture

data in digital format at the source and hence increase the automation of chart correction and new chart compilation, and to provide automated bathymetric data bases. A single ship equipped with the special Array Sonar System can produce 200 million soundings per year in digital format. This capability could be utilized to obtain in digital form soundings which now comprise the backlog in analog form. In accordance with this approach, only new volumes of digital sounding data are shown in Table IV-8. A diagram of the proposed shore-based processing system is shown in Figure IV-3. This configuration consists of a large main processor for chart and map updating (featuring the use of CRTs as an aid to chart maintenance), a new chart and map computation, data computation and analyses for atlas production; on-line CRT displays for live atlas, environmental data analyses and plots; on-line disks for storing data required during chart and map updating computation, live atlas displays, etc., and for the maintenance of the data library indices.

The satellite processor handles all input-output operations. These include input for digitized bathymetry, gravity and magnetic data; analog input via a manually operated curve follower (e.g., smooth sheets); plotting and contouring for nautical charts, bathymetric maps, magnetic and gravity field maps, currents charts and sea and swell charts; and microfilm recording of magnetic tape data and CRT displays. Routine maintenance operations, such as aids and hazards to navigation for input to Notice to Mariners, are also performed on the satellite processor.

The TDP for the NAVOCEANO shore-based system is shown in Table IV-9. The ten-year data processing cost for additional resources is $8,488,000. This amount appears small in comparison to the ten-year cost of application personnel of $181,380,000, which is shown in Table IV-10. Currently, NAVOCEANO personnel costs are much greater than data processing equipment costs. This situation will not change significantly in the future. Although the use of CRTs, computer maintenance of chart corrections, etc., would lead to personnel reduction if the workload did not increase, the significant increase in workload

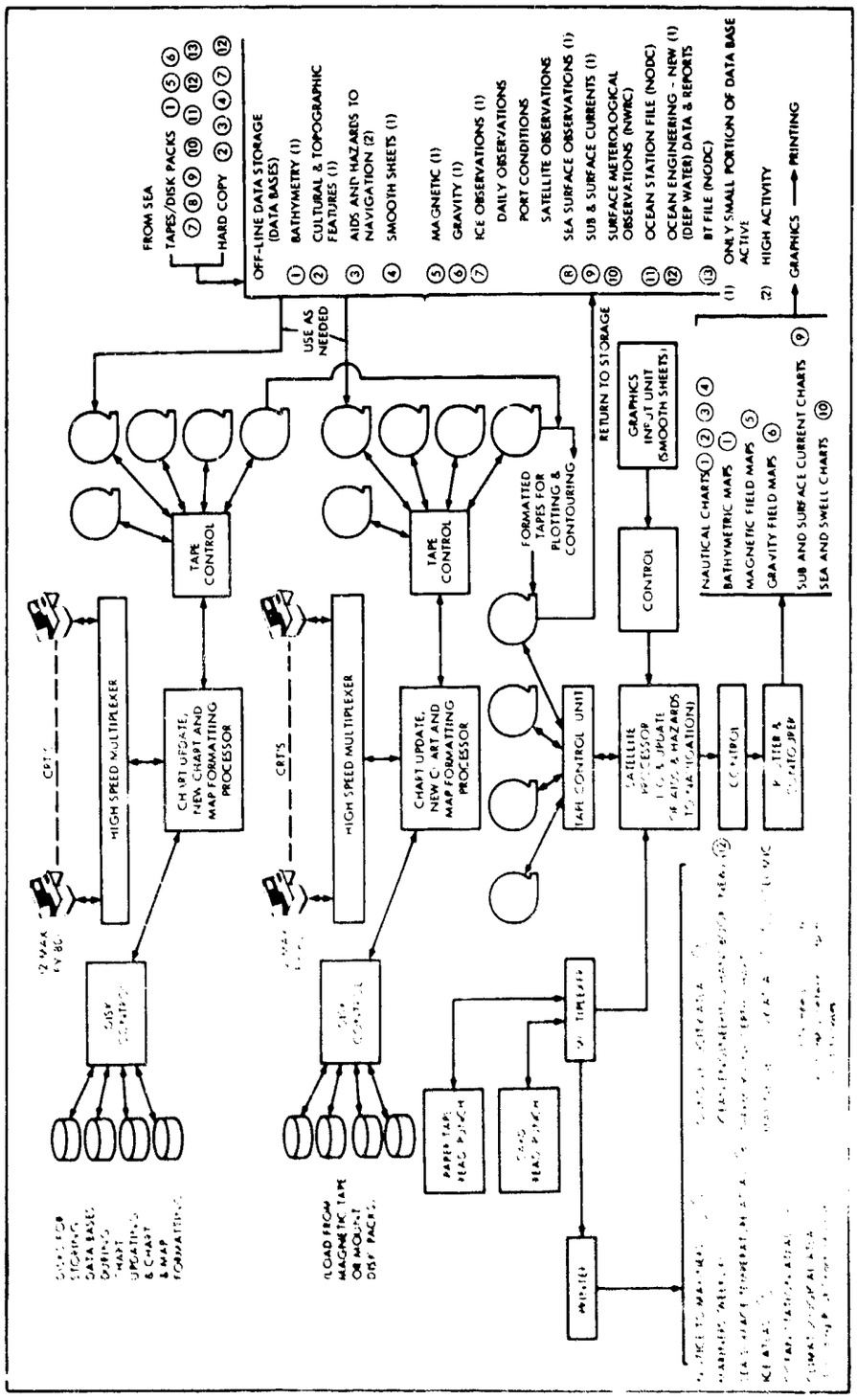

FIGURE IV-3. NAVOCEANO SHORE-BASED SYSTEM PRIORITY DATA AND PRODUCTS PROCESSING

TABLE IV-9

TECHNICAL DEVELOPMENT PLAN SPECIFICATION - NAVOCEANO SHORE-BASED SYSTEM - PRIORITY PRODUCTS/DATA - NEW HARDWARE, SOFTWARE AND COMPUTER OPERATIONS REQUIREMENTS

FY	ACTIVITY*	HARDWARE REQUIREMENTS	HARDWARE PURCHASE COSTS (MILLIONS)	SOFTWARE(1) DEVELOPMENT REQUIREMENTS	SOFTWARE MAINTENANCE REQUIREMENTS	SOFTWARE PERSONNEL	SOFTWARE PERSONNEL COSTS (MILLIONS)	COMPUTER OPERATIONS PERSONNEL	COMPUTER OPERATIONS PERSONNEL COSTS(3) (MILLIONS)	TOTAL ANNUAL DATA PROCESSING COST(4) (MILLIONS)
71	(1) CHART UPDATING, CHART & MAP FORMATTING. (2) EXPAND SOURCE DATA INDEX	(1) (2) (4) PROCESSOR 1 AND AUXILIARY EQUIPMENT (1 CRT)	$1.[illegible]03	(1) CRT LIGHT PEN PROGRAMS (15K INSTRUCTIONS) (2) SOURCE DATA INDEX (10K INSTRUCTIONS)		7	$.105	.0	$.100	$1.705
72	(3) CHART & MAP PLOTTING. GRAPHIC INPUT. UPDATE & PRODUCE NOTICE TO MARINERS	(3) (4) PROCESSORS 2 & 3 AND AUXILIARY EQUIPMENT (1) 12 CRT'S	2.500	(1) (2) (3) PLOTTING & GRAPHIC INPUT PROGRAMS (15K INSTRUCTIONS)		10	.150	30	.300	2.950
73	(4) ATLAS & CHART PRODUCTION	(1) 2 GRAPHIC CRT'S	.058	(3) (4) ATLAS & CHART SOFTWARE (10K INSTRUCTIONS)	(1) (2)	8	.120	30	.300	.478
74				(4)	(1) (2) (3)	5	.075	30	.300	.375
75		(1) 4 GRAPHIC CRT'S 1 MICROFILM RECORDER	.350		(1) (2) (3) (4)	3	.045	30	.300	.695
76					(1) (2) (3) (4)	3	.045	30	.300	.345
77	(5) INCREASE ON-LINE STORAGE CAPACITY TO ACCOMMODATE GROWTH IN DATA ASSETS	(1) 1 GRAPHIC CRT'S	.087	(5) MASS STORAGE UNIT & BULK CORE STORAGE & RETRIEVAL PROGRAMS (15K INSTRUCTIONS)	(1) (2) (3) (4)	5	.075	30	.300	.462
78				(5)	(3) (4)	4	.060	30	.300	.360
79		(1) 2 GRAPHIC CRT'S	.058	(5)	(4)	3	.045	30	.300	.403
80	(6) PROVIDE NOW DATA COORDINATION WITH OTHER AGENCIES	(5) 2 MASS STORAGE UNITS 2 BULK CORE MEMORY UNITS (6) 1 BULK DATA ADAPTOR 1 TERMINAL ADAPTOR	.400		(5)	1	.015	30	.300	.715
TEN YEAR TOTALS (MILLIONS)			$4.953				$.735		$2.800	$8.488

*Initiation of improved product/service or new product/service

(1) (2) (3) Nautical charts, bathymetric maps, [illegible] mariners, magnetic field map, gravity field map, sub & surface current chart, sea & swell chart

(2) (4) Sea surface temperature atlas, [illegible], ocean station atlas, climatological atlas, sound velocity atlas, thermocline depth chart, marine geology atlas, ocean engineering [illegible]

NOTE: Numbers in parenthesis [illegible] related items, e.g., hardware in FY 71 is required for Chart Updating (1), Expansion of Source Data Index (2), and Atlas and Chart Production (3).

- Numbers in parenthesis indicate programs for which maintenance requirements exist.
- Priced at $10,000 per annum per man year.
- Priced at $[illegible] per annum per man year
- Hardware cost and software personnel cost and computer operations personnel cost.

which would result from the implementation of the TDP outweighs efficiencies in production achieved through automation. Application personnel requirements which are affected by the use of computers are distinguished from those where there is little impact. For example, chart maintenance and maritime safety (Notice to Mariners), personnel requirements, shown in Table IV-10, come under the former category; an overall increase in requirements is projected. Where normal progress in personnel requirements were believed to obtain, such as in oceanographic analysis, a compound five percent annual increase was used.

A detailed computer configuration diagram for the shore-based system is shown in Figure IV-4 and data processing hardware characteristics are tabulated in Table IV-11. The features of the maximum system are:

- 2 processors and peripheral gear by FY 72
- 960 million characters of on-line disk storage by FY 72
- 12 CRT's by FY 72 and 24 by FY 80
- 800 million characters of on-line mass storage by FY 80

The on-line storage requirements are based on storing one-tenth of the bathymetric, magnetic and gravity data on-line at any one time, and for storing a directory to all data for retrieving data from the on-line disks or tape units or to call for mounting off-line tape reels. It should be noted that these equipment requirements pertain only to the named priority products and data and not to the totality of NAVOCEANO requirements.

The second component of the TDP consists of the requirements for shipboard instrumentation and data processing. In order to determine these requirements it is necessary to estimate the number of ships which will be required for hydrographic, geophysical and oceanographic surveys for the decade. It is highly desirable that each ship be equipped to collect the three types of data. This approach will permit maximum utilization of expensive platforms. Also, with simultaneous collection of the three types of data, a complete description

TABLE IV-10

TECHNICAL DEVELOPMENT PLAN SPECIFICATION - NAVOCEANO SHORE-BASED SYSTEM
FUTURE PERSONNEL REQUIREMENTS FOR EXISTING ORGANIZATION COMPONENTS
PRIORITY PRODUCTS AND DATA

FY	Applications Personnel						Total Applications Personnel Cost(1)	Total Annual Budget for Shorebased System(2)
	Nautical Chart Production		Maritime Safety	Hydrographic Magnetic Gravity Bathymetry	Oceanographic Analysis	Total Applications Personnel		
	Chart Maintenance	Other					(Millions)	(Millions)
71	80	248	90	326	103	847	$12.710	$14.415
72	100	260	120	342	108	930	13.950	16.900
73	120	273	150	359	113	1015	15.230	15.708
74	140	287	180	377	118	1102	16.530	16.905
75	150	301	210	396	124	1181	17.720	18.415
76	160	316	230	416	130	1252	18.780	19.125
77	170	332	250	437	137	1326	19.890	20.352
78	180	348	270	459	144	1401	21.020	21.380
79	190	365	290	482	151	1478	22.170	22.573
80	200	383	310	507	159	1559	23.380	24.095
						TEN YEAR TOTALS	$181.380	$189.868

1. Priced at $15,000 per annum per man year.
2. Total data processing cost and total applications personnel cost.

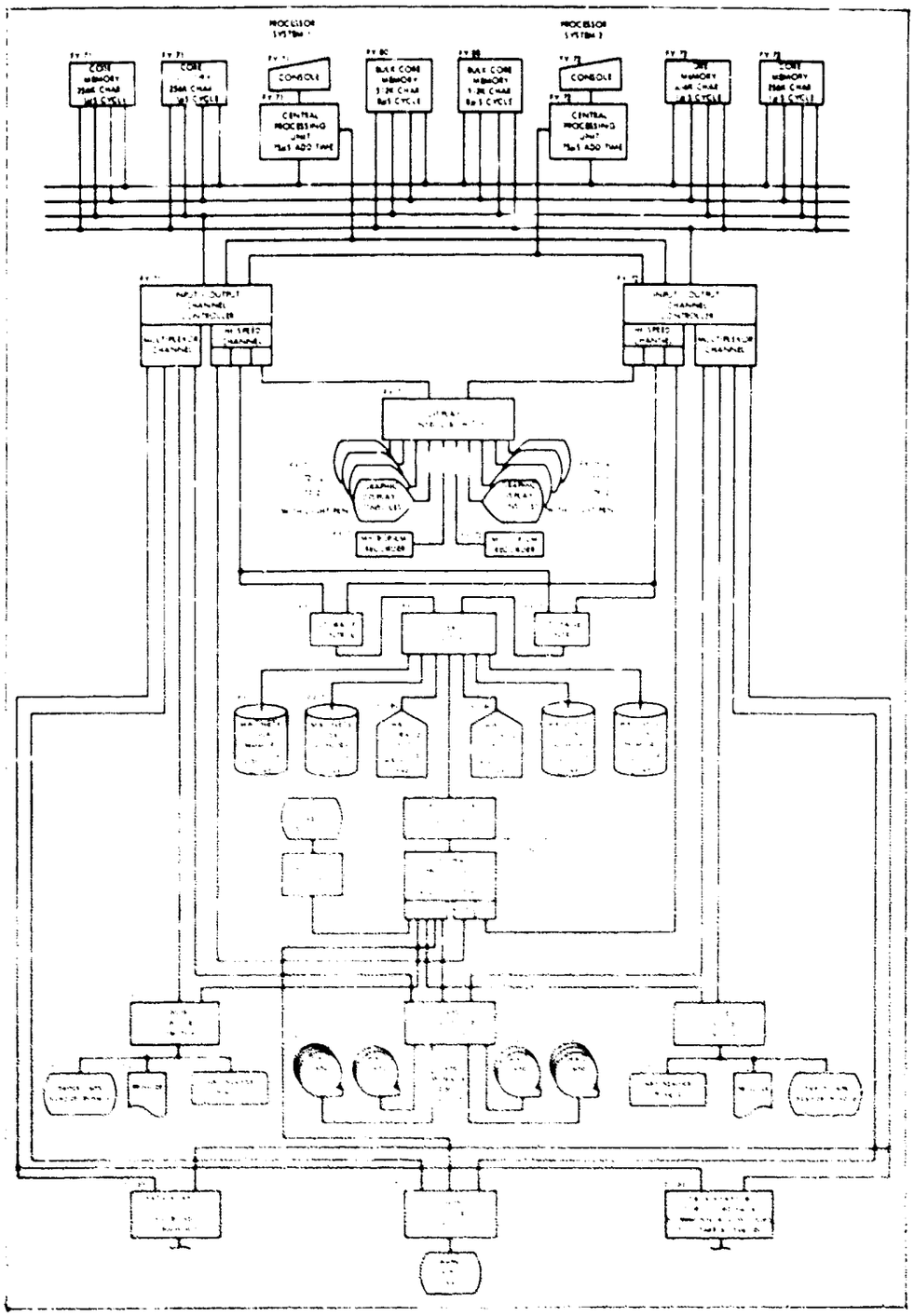

FIGURE IV-4. NAVOCEANO SYSTEM

TABLE IV-11

DATA PROCESSING HARDWARE SPECIFICATION - AGENCY: NAVOCEANO SHORE-BASED SYSTEM

	FY 71	FY 72	FY 73	FY 74	FY 75	FY 76	FY 77	FY 78	FY 79	FY 80
INPUT										
NUMBER AND TYPE INPUT RATE(1)	1 CARD READER 1000 CPM	1 CARD READER 1000 CPM								1 DATA ADAPTOR 230K BITS/SEC
NUMBER AND TYPE INPUT RATE	1 PAPER TAPE 1000 CHAR/SEC	1 PAPER TAPE 1000 CHAR/SEC								
NUMBER AND TYPE INPUT RATE	1 GRAPHIC CRT CONSOLE	12 GRAPHIC CRT	2 GRAPHIC CRT		4 GRAPHIC CRT		3 GRAPHIC CRT		2 GRAPHIC CRT	1 DATA ADAPTOR 6.4M CHAR/SEC
NUMBER AND TYPE INPUT RATE		1 GRAPHIC CURVE FOLLOWER								
STORAGE										
NUMBER AND TYPE CAPACITY ACCESS TIME TRANSFER RATE(2)	2 MAGNETIC DISC UNITS 230×10^6 CHAR 112 MS 277K CHAR/SEC	2 MAGNETIC DISC UNITS 230×10^6 CHAR 112 MS 277K CHAR/SEC								2 MASS STORAGE UNITS 400×10^6 CHAR 500 MS 55K CHAR/SEC
NUMBER AND TYPE CAPACITY ACCESS TIME TRANSFER RATE	6 MAGNETIC TAPE 800-1600 BITS/SEC 2 MIN. 30K CHAR/SEC	8 MAGNETIC TAPE 800-1600 BITS/SEC 2 MIN. 30K CHAR/SEC								
PROCESSOR										
NUMBER ARITHMETIC SPEED STORAGE CAPACITY STORAGE CYCLE TIME	1 CPU 1.3 μs ADD 512K CHARACTERS 1 μs	1 CPU 1.75 μs ADD 256K CHARACTERS 1 μs								
NUMBER ARITHMETIC SPEED STORAGE CAPACITY STORAGE CYCLE TIME		1 CPU 40 μs ADD 256K CHARACTERS 1 μs								
OUTPUT										
NUMBER AND TYPE OUTPUT RATE(3)	1 MICROFILM RECORDER 30 FRAMES/SEC	1 X-Y TABLE PLOTTER 200 INCH/SEC								
NUMBER AND TYPE OUTPUT RATE	1 PRINTER 1000 LPM	1 PRINTER 1000 LPM								
NUMBER AND TYPE OUTPUT RATE	1 CARD PUNCH 200 CPM	1 CARD PUNCH 300 CPM								
NUMBER AND TYPE OUTPUT RATE		1 MICROFILM RECORDER 30 FRAMES/SEC								

(1) To Processor (1) To processor (2) To/from processor (3) From Processor

of the water column, geophysical properties, and bottom topography at a given point and along a track can be obtained. The correlation of many parameters by time and position would permit many parameters to be automated, associated and stored on data bases as a package, thus reducing the requirement of correlating data from different data bases when a complete description of properties is required at a given location and time or along a given track. Ship requirements are based on the need for hydrographic surveys: increased nautical chart and bathymetric coverage for areas requiring 1:75,000 scale or larger by 50 percent over the decade. This objective would require 171 ship-years to attain. It is assumed that 12 ships are currently available for hydrographic work, leaving a balance of 51 ship-years which must be provided by new ships--one ship acquired in each of the years FY 72 through FY 77, plus two ships in each of the years FY 78 through FY 80, or a total of 12 ships. In addition to hydrographic data, the 22 ships could generate a maximum of 6,000,000 miles of magnetic and gravity data in 10 years if operated 12 hours per day at 8 knots.

The TDP for shipboard systems is shown in Table IV-12. Ship costs are not included. It is recommended that a data processing system identical in configuration to the shipboard system be installed on shore prior to shipboard installation in order to test programs prior to committing the system to shipboard use. Simulation programs could be written to simulate the at-sea input of data to the system. Other programs could be developed to record and analyze the performance of the system under simulated conditions. "Live inputs" from selected instruments, such as the STD, could be obtained from instruments under test at the National Oceanographic Instrumentation Center (NOIC) by transmitting the data over telephone lines to the test site or by installing the test site in the vicinity of the NOIC. A feature of the shipboard processing system is the capability to control the sampling of data from the digital computer. This feature permits control of time, frequency and duration of sampling. Since some geographic areas require more intensive data collection

TABLE IV-12

TECHNICAL DEVELOPMENT PLAN SPECIFICATION - NAVOCEANO SHIPBOARD ACQUISITION AND PROCESSING SYSTEMS - PRIORITY PRODUCTS AND DATA - NEW HARDWARE, SOFTWARE AND COMPUTER OPERATING REQUIREMENTS

FY	ACTIVITY	HARDWARE REQUIREMENTS	HARDWARE PURCHASE COSTS (MILLIONS)	SOFTWARE[1] DEVELOPMENT REQUIREMENTS	SOFTWARE MAINTENANCE REQUIREMENTS	SOFTWARE PERSONNEL SHORE	SOFTWARE PERSONNEL SHIP	SOFTWARE PERSONNEL COSTS[2] (MILLIONS)	COMPUTER OPERATIONS PERSONNEL SHORE	COMPUTER OPERATIONS PERSONNEL SHIP	COMPUTER OPERATIONS PERSONNEL COSTS[3] (MILLIONS)	TOTAL ANNUAL SHIPBOARD SYSTEMS DATA PROCESSING COSTS[4] (MILLIONS)
71	INSTALL A COMPUTER SYSTEM ON SHORE WITH THE SAME CONFIGURATION AS SHIPBOARD SYSTEM FOR PROGRAM CHECK-OUT & DATA ACQUISITION SIMULATION		$1.228	(1) HYDROGRAPHIC PROGRAMS (15K INSTRUCTIONS) (1A) TEST DATA GENERATOR & SIMULATION PROGRAMS (10K INSTRUCTIONS)		13		$.215	10		$.100	$.315
72	INSTALL SHIPBOARD DATA PROCESSING & INSTRUMENTATION SYSTEMS FOR (1) HYDROGRAPHIC, (2) GEOPHYSICAL & (3) OCEANOGRAPHIC SURVEYS	1 SHIPBOARD COMPUTER SYSTEM[a] 1 INSTRUMENTATION SYSTEM[b]	1.228 .487	(2) GEOPHYSICAL PROGRAMS (10K INSTRUCTIONS) (2A) TEST DATA GENERATOR PROGRAMS (5K INSTRUCTIONS)	(1)	9	1[c]	.150	10	1[d]	.105	1.970
73	SAME AS FY 72	SAME AS FY 72	1.228 .487	(3) OCEANOGRAPHIC PROGRAMS (10K INSTRUCTIONS) (3A) TEST DATA GENERATOR (5K INSTRUCTIONS)	(1) (2)	9	2	.165	10	2	.130	2.010
74	SAME AS FY 72	SAME AS FY 72	1.228 .487		(1) (2) (3)	2	3	.075		3	.045	1.835
75	SAME AS FY 72	SAME AS FY 72	1.228 .487		(1) (2) (3)	2	4	.090		4	.060	1.865
76	SAME AS FY 72	SAME AS FY 72	1.228 .487		(1) (2) (3)	2	5	.105		5	.070	1.890
77	SAME AS FY 72	SAME AS FY 72	1.228 .487		(2) (3)	1	6	.105		6	.090	1.910
78	INSTALL 2 SHIPBOARD SYSTEMS	2 SHIPBOARD COMPUTER SYSTEMS 2 INSTRUMENTATION SYSTEMS	INSTALL FY 71 SHORE SYSTEM ABOARD SHIP 1.228 .974		(3)	1	8	.135		8	.120	2.457
79	SAME AS FY 78	SAME AS FY 78	2.456 .974			1	10	.165		10	.150	3.745
80	SAME AS FY 78	SAME AS FY 78	2.456 .974			1	12	.195		12	.180	3.805
TEN YEAR TOTALS (MILLIONS)			$19.352					$1.400			$1.050	$21.802

(1) *Assumptions:* Increase nautical chart and bathymetric map coverage for areas requiring 1:75,000 scale or larger by 50% over 10 year period (exclusive of CCS areas of responsibility). (120,000 survey miles; 16 miles wide, to miles spacing, 8 knots, 12 hrs. per day) = 171 ship-years. Eight existing hydrographic survey ships plus four ships to be commissioned in 1969 will provide 120 ship-years. Twelve new ships are assumed which will provide 51 ship-years based on the above assumed schedule of new ship availability.

a 1 processor (131K byte storage), 2 I/O channels, 1 disc control unit, 4 disc drives, 4 magnetic tape drives and control, 1 card reader/punch, 4 typewriters, 1 digital plotter, 1 CRT display and light pen, 1 A/D converter and control, 1 printer, 4 strip chart recorders.

b 1 precision graphic recorder, 1 proton precision magnetometer, 1 air-sea gravity meter, 1 SST recorder, 1 XBT launcher and recorder, 1 STD, 10 nansen bottles, 1 GEK, 1 sound velocimeter, 1 thermoprobe, 1 bottom sampler, 1 corer, 1 dredge, 1 underwater camera, 1 waveheight meter, biological samplers and plankton nets, 1 sub-bottom structure instrument (GEP), 1 pyrheliometer, 1 hygrothermometer, 1 anemometer, wet and dry bulb thermometers, barometers and psychrometers, 1 pinger.

c Programmer/operator.

d Maintenance technician.

1. Numbers in parenthesis () indicate programs for which maintenance requirements exist.
2. Priced at $15,000 per annum per man year.
3. Priced at $10,500 per annum per man year.
4. Hardware cost and software personnel cost and computer operations personnel cost.

than others, the digital computer control of sampling could be employed to provide the appropriate sampling for a given area. This feature could also be used to control the read-out of laboratory instruments during tests on land.

With a shipboard computer, it is also possible to reduce the volume of data handled by programming the shipboard computer to record only those data values which differ significantly from previous values. Unchanging data are not recorded or are placed in a separate file.

The instrument suit for hydrographic, geophysical and oceanographic data collection and data processing systems is indicated in Table IV-12. Data processing personnel requirements, both shore-based and shipboard, are shown in Table IV-13. The significant cost item is the cost of instrumentation and data processing hardware; the ten-year cost totals $19,352,000. The total ten-year shipboard system costs, including personnel, total $21,802,000. Sh Shore-based system costs predominate:

10-year shore-based system cost	$189,868,000
10-year shipboard system cost	21,802,000
	$211,670,000

Data processing hardware specifications for the shipboard computer are presented in Table IV-14.

TABLE IV-13

TECHNICAL DEVELOPMENT PLAN
NAVOCEANO
TOTAL BUDGETS FOR PRIORITY DATA AND PRODUCTS

FISCAL YEAR	SHOREBASED SYSTEM BUDGET (MILLIONS)	SHIPBOARD SYSTEM BUDGET (MILLIONS)	TOTAL ANNUAL BUDGET (MILLIONS)
71	$14.415	$ .315[a]	$14.730
72	16.900	1.970	18.870
73	15.708	2.010	17.718
74	16.905	1.835	18.740
75	18.415	1.865	20.280
76	19.125	1.890	21.015
77	20.352	1.910	22.262
78	21.380	2.457	23.837
79	22.573	3.745	26.318
80	24.095	3.805	27.900
TEN YEAR TOTALS	$189.868	$21.802	$211.670

a Excluding ship costs.

TABLE IV-14

DATA PROCESSING HARDWARE SPECIFICATION - NAVOCEANO SHIPBOARD COMPUTER SYSTEMS

	FY 71	FY 72	FY 73	FY 74	FY 75	FY 76	FY 77	FY 78	FY 79	FY 80
INPUT										
NUMBER AND TYPE INPUT RATE(1)	1 CARD READER 1000 CPM	SAME AS FY 71							2 CARD READERS 1000 CPM	SAME AS FY 79
NUMBER AND TYPE INPUT RATE	1 A/D CONVERTER 10,000 CONV/SEC								2 A/D CONVERTERS 10,000 CONV/SEC	
NUMBER AND TYPE INPUT RATE	4 KEYBD. TERMINALS 10 CHAR/SEC								8 KEYBD. TERMINALS 10 CHAR/SEC	
NUMBER AND TYPE INPUT RATE	1 GRAPHIC DISPLAY CONSOLE								2 GRAPHIC DISPLAY CONSOLES	
STORAGE										
NUMBER AND TYPE CAPACITY ACCESS TIME TRANSFER RATE(2)	4 MAGNETIC TAPE UNITS 9 TRACK 800-1600 BPI 2 MIN 30K CHAR/SEC	SAME AS FY 71							8 MAGNETIC TAPE UNITS 9 TRACK 800-1600 BPI 2 MIN 30K CHAR/SEC	SAME AS FY 79
NUMBER AND TYPE CAPACITY ACCESS TIME TRANSFER RATE	4 MAGNETIC DISC UNITS @ 8×10^6 CHARACTERS 175 MS 156K CHAR/SEC								8 MAGNETIC DISC UNITS @ 8×10^6 CHARACTERS 175 MS 156K CHAR/SEC	
PROCESSOR										
NUMBER ARITHMETIC SPEED STORAGE CAPACITY STORAGE CYCLE TIME	1 CPU 1.75 μs ADD 131K CHARACTERS 1 μs	SAME AS FY 71							2 CPUs 1.75 μs ADD 131K CHARACTERS 1 μs	SAME AS FY 79
OUTPUT										
NUMBER AND TYPE OUTPUT RATE(3)	1 CARD PUNCH 300 CPM	SAME AS FY 71							2 CARD PUNCHES 300 CPM	SAME AS FY 79
NUMBER AND TYPE OUTPUT RATE	1 DIGITAL PLOTTER 200 INCR/SEC								2 DIGITAL PLOTTERS 200 INCR/SEC	
NUMBER AND TYPE OUTPUT RATE	1 LINE PRINTER 1000 LPM								2 LINE PRINTERS 1000 LPM	
NUMBER AND TYPE OUTPUT RATE(3)	4 STRIP CHART RECORDERS								4 STRIP CHART RECORDERS	

(1) To processor (2) To/from processor (3) From processor

COAST AND GEODETIC SURVEY

The Coast and Geodetic Survey (C&GS) will play a key role in future data programs due to the increased emphasis on mapping the continental shelf and data collection from the coastal zone. Existing priority data and products include:

- Conventional Nautical Charts (Sailing, General, Coast and Harbor)
- Small-Craft Nautical Charts
- Bathymetric Maps
- Magnetic Field Maps
- Gravity Field Maps
- Bathymetry, Magnetic and Gravity Data
- Tide Tables[1]
- Tidal Current Tables and Charts[1]

The principal recommendations for improvements in existing priority products are shown in Table IV-15. Primary emphasis is accorded to increasing the timeliness of nautical charts by reducing the time interval between updating charts, producing small-craft charts for additional areas and completing the bathymetric and geophysical mapping of the U.S. continental shelf.

Recommended new products invlude a set of coastal atlases, sea level variation charts and tables and meteorological tide predictions. The coastal atlases would contain topographic, bathymetric, physical, chemical, biological and geological characteristics of the coastal zone, climatological information, fishery catch statistics, descriptions of marine life and recreational presentations. It is recommended that the C&GS be the lead agency for the coastal atlas effort. The rationale for this recommendation is that, since the majority of the data required for publishing the atlas have not been collected, a large survey effort must be mounted. Since C&GS makes hydrographic surveys of coastal waters, a capability exists for coastal data collection. It may be possible to combine

[1] Standard astronomical products are not considered priority products. New or improved products which incorporate the meterological component of tides are considered priority products.

TABLE IV-15

COAST AND GEODETIC SURVEY SYSTEM - PRIORITY PRODUCTS AND DATA

PRODUCT IMPROVEMENT	FISCAL YEAR									
	71	72	73	74	75	76	77	78	79	80
Reduce Time Interval Between Updating Nautical Charts (MONTHS)	24	18	18	12	12	12	6	6	6	6
Increase Small Craft Chart Coverage for the West Coast (PER CENT)	25	35	45	55	65	75	85	90	95	100
Increase Small Craft Chart Coverage for Alaska (PER CENT)	0	10	15	20	25	30	35	40	45	50
Reduce Time Interval Between Resurveys[1] (YEARS)	75	75	75	75	65	65	65	65	65	60
Increase Harbor Chart Coverage (PER CENT)	85	90	95	100	100	100	100	100	100	100
Increase Revision of Existing Harbor Charts (PER CENT)	0	10	20	25	30	35	40	45	50	55
Increase Bathymetric Coverage of U.S. Continental Shelf (PER CENT)	30	35	40	47	54	61	70	80	90	100

[1]Reduction to 60 year interval in 15 years; reduction to 50 year interval in 15 years.

hydrographic survey work with other data collection using the same survey vessels. Since a variety of data and summaries are required in order to publish the atlases, it is clear that several organizations would contribute to the effort. These include EDS for climatological data and analysis, BCF and BSF&W for fishery statistics and USGS for continental shelf geological data. In addition, the coastal states should play an important part in organizing and contributing to the effort. Although C&GS would have lead agency responsibility and would be primarily responsible for collecting data, the major data compilation analysis and publication activities would be performed by other organizations, e.g., EDS for climatological data.

It is also recommended that C&GS provide as, new products, predictions of significant changes in tides due to meteorological forces, and that changes in sea level as a result of meteorological forces be published in the form of charts and tables. A proposed schedule of new product implementation is shown in Table IV-16.

Table IV-16 also shows projections of the amounts of new bathymetric data which would normally be generated by C&GS. This corresponds to 60 smooth sheets per year with a five percent annual growth factor included. It is recommended that the backlog of 60 million soundings not be digitized en masse and that existing soundings only be digitized as needed by inputting smooth sheet data via a manually controlled curve follower.[1] However, these soundings should be referred to, compared, and incorporated with new data on a selective basis when compiling maps and charts by automated means. This procedure is recommended because the existing data frequently satisfy the density requirements for new bathymetric mapping and nautical charting. Furthermore, new data do not necessarily supersede existing data. In general, only holiday areas, areas

[1]The position of the C&GS on this matter is that "it is necessary that the backlog of 60 million soundings be digitized en masse so that existing soundings may be referred to, compared, and incorporated with new data when compiling maps and charts by automated means."

TABLE IV-16

COAST AND GEODETIC SURVEY SYSTEM - PRIORITY PRODUCTS AND DATA

	FISCAL YEAR									
	71	72	73	74	75	76	77	78	79	80
NEW PRODUCTS COASTAL ATLAS SEA LEVEL VARIATION CHARTS AND TABLES			DEVELOP AND PRODUCE			UPDATE		UPDATE		UPDATE
NEW BATHYMETRIC DATA GENERATION AND STORAGE REQUIREMENTS(1) (DIGITAL DATA FROM SEA)										
SOUNDINGS (M)	1.00	1.05	1.10	1.16	1.22	1.28	1.34	1.41	1.48	1.55
BITS (M)	100	105	110	116	122	128	134	141	148	155
CHARACTERS (M)	17	18	19	20	21	22	23	24	25	26
CUMULATIVE CHARACTERS (M)	17	35	54	74	95	117	140	164	189	215
NUMBER OF TAPE REELS	1	2	3	4	5	6	7	9	10	11
NEW TIDE DATA GENERATION AND STORAGE REQUIREMENTS(1) (DIGITIZED DATA)										
DATA POINTS(2) (M)	13.2	13.9	14.6	15.3	16.1	16.9	17.7	18.6	19.5	20.5
CUMULATIVE DATA POINTS (M)	13.2	27.1	41.7	57.0	73.1	90.0	107.7	126.3	145.8	166.3
CHARACTERS(3) (M)	92	97	102	107	113	118	124	130	137	144
CUMULATIVE CHARACTERS (M)	92	189	291	398	511	629	753	883	1020	1164
NUMBER OF TAPE REELS	5	10	15	20	26	32	38	45	51	59

(1) Only small portion of data base active at any one time.

(2) Assumes 10 points digitized every hour at 150 stations and growth rate of 5% per year.

(3) Assume 7 characters per data point. (EAR.

(4) 100 bits of binary code assumed to represent one sounding.

M = MILLIONS B = BILLIONS

which are changing, or areas to be mapped at larger scales need to be accomplished with new surveys. Data from these surveys can be captured in digital format with data processing equipment installed on newer vessels.

The TDP for the shore-based system is shown in Tables IV-17 and IV-18. The data processing system characteristics are essentially those described for the NAVOCEANO shore-based system except for smaller peripheral equipment storage capacities and fewer graphic CRT units. It is anticipated that, ultimately, the use of CRTs will play a major role in chart correction procedures. Although the requirements for marine and aeronautical chart production differ, the research being conducted in the aeronautical chart operations of C&GS for the employment of graphics consoles for chart correction and compilation will provide useful information on technical and economic feasibility.

The ten-year data processing cost is $5.485,000 for the shore-based system. Applications personnel required to improve existing products and to develop new products are shown in Table IV-18. As in the case of NAVOCEANO, the greatest increase in workload and also the area that could be most affected by wider application of automated procedures are the chart correction maintenance and aids to navigation sections. For this reason, chart maintenance and navigation aids personnel requirements are distinguished from personnel required for new chart production in Table IV-18. Where significant increases in personnel are not anticipated as a result of TDP recommendations, a five percent annual increase in personnel requirements has been assumed.

It is assumed that the impact of increased geographical coverage will fall primarily on shipboard operations in terms of number of ships, survey crew requirements and shipboard instrumentation and data processing equipment requirements. It is anticipated that a greater portion of data reduction, processing and chart preparation will occur aboard ship in the future.

TABLE IV-17
TECHNICAL DEVELOPMENT PLAN SPECIFICATION - COAST AND GEODETIC SURVEY SHORE-BASED SYSTEM - PRIORITY PRODUCTS AND DATA - NEW HARDWARE, SOFTWARE AND COMPUTER OPERATIONS REQUIREMENTS

						SOFTWARE PERSONNEL	SOFTWARE PERSONNEL COSTS (5) (MILLIONS)	COMPUTER OPERATIONS PERSONNEL	COMPUTER OPERATIONS PERSONNEL COSTS (1) (MILLIONS)	TOTAL ANNUAL DATA PROCESSING COST (MILLIONS)
[illegible]	[illegible]	[illegible]	[illegible]	[illegible]	[illegible]	7	.105	19	$.100	$1.9[illegible]
[illegible]	[illegible]	[illegible]	[illegible]	[illegible]	[illegible]	16	.15[illegible]	20	.200	1.4[illegible]
[illegible]	[illegible]	[illegible]	[illegible]	[illegible]	[illegible]	8	.120	20	.200	.320
[illegible]	[illegible]	[illegible]	[illegible]	[illegible]	[illegible]	5	.075	20	.200	.275
[illegible]	[illegible]	[illegible]	[illegible]	[illegible]	[illegible]	3	.045	20	.200	[illegible]
[illegible]	[illegible]	[illegible]	[illegible]	[illegible]	[illegible]	3	.045	20	.200	[illegible]
[illegible]	[illegible]	[illegible]	[illegible]	[illegible]	[illegible]	3	.045	20	.200	[illegible]
[illegible]	[illegible]	[illegible]	[illegible]	[illegible]	[illegible]	2	.030	20	.200	[illegible]
[illegible]	[illegible]	[illegible]	[illegible]	[illegible]	[illegible]	1	.015	20	.200	.215
[illegible]	[illegible]	[illegible]	[illegible]			1	.015	20	.200	.295
[illegible]							$.645		$1.900	$5.485

[illegible] MAP, GRAVITY FIELD MAP

[illegible] maintenance requirements exist.

TABLE IV-18
TECHNICAL DEVELOPMENT PLAN SPECIFICATION - COAST AND GEODETIC SURVEY
SHORE-BASED SYSTEM - PRIORITY PRODUCTS AND DATA
FUTURE PERSONNEL REQUIREMENTS FOR EXISTING ORGANIZATION COMPONENTS

	APPLICATIONS PERSONNEL								
	MARINE CHART(1)								
FY	CHART MAINTENANCE	OTHER(2)	AIDS TO NAVIGATION	HYDROGRAPHIC MAGNETIC GRAVITY	TIDE DATA AND SEA LEVEL VARIATION CHARTS & TABLES(4)	COASTAL ATLAS DEVELOPMENT AND PRODUCTION(4)	TOTAL APPLICATIONS PERSONNEL	TOTAL APPLICATIONS PERSONNEL COST(5)	TOTAL ANNUAL BUDGET FOR SHORE-BASED SYSTEM(6)
								(MILLIONS)	(MILLIONS)
71	20	28	6	14(3)	10	--	78	$1.170	$3.075
72	25	29	7	15	11	--	87	1.305	2.755
73	30	31	9	16	12	10	108	1.620	1.940
74	30	33	11	17	13	11	115	1.725	2.000
75	35	35	13	18	14	12	127	1.905	2.180
76	35	38	16	19	15	13	136	2.040	2.285
77	40	39	19	20	16	14	148	2.220	2.465
78	45	42	22	21	17	15	162	2.430	2.690
79	45	45	26	22	18	16	172	2.580	2.795
80	50	47	30	23	19	17	186	2.790	3.085
	TEN YEAR TOTALS							$19.785	$25.270

(1) EXCLUDING AIDS TO NAVIGATION.

(2) NEW NAUTICAL CHART AND BATHYMETRIC MAP PRODUCTION.

(3) MAGNETIC DATA PROCESSING 5, GRAVITY DATA PROCESSING 4, SURVEY PLANNING 5.

(4) NEW PRODUCTS.

(5) PRICED AT $15,000 PER ANNUM PER MAN YEAR.

(6) TOTAL DATA PROCESSING COST AND TOTAL APPLICATIONS PERSONNEL COST.

The ten-year application personnel cost is $19,785,000, and the total ten-year cost of the shore-based system is $25,270,000. As in the case of NAVOCEANO, personnel costs predominate in the ten-year budget. A computer configuration diagram for the shore-based system is shown in Figure IV-5 and data processing hardware characteristics are listed in Table IV-19.

The requirements for shipboard data acquisition and processing for hydrographic, geophysical and oceanographic surveys are shown in Table IV-20.[1] Again, the concept of instrumenting each ship to perform all three types of data collection has been employed. Seven new survey vessels have been assumed in formulating the TDP. It is assumed that one vessel would go into operation in each of the fiscal years 72 through 78. The number of ships is justified primarily on the need in the next decade to:

1. Complete the bathymetric mapping of the continental shelf.
2. Increase small craft chart coverage for the west coast and Alaska.
3. Gradually reduce the resurvey interval to 60 years by 1980 and to 50 years by 1985.

These requirements amount to 102 ship-years; 60 of which could be provided by 6 existing vessels and 42 by new vessels. Ten-year shipboard data acquisition and processing costs, including personnel, total $14,190,000. Table IV-21 provides a breakdown of shore-based and shipboard systems costs and indicates a combined ten-year budget of $39,460,000. Shipboard data processing specifications are tabulated in Table IV-22.

The technical requirements for C&GS data management and product preparation are quite similar to those of NAVOCEANO. The geographic area of responsibility is different, but this is of no consequence in relation to data processing requirements. This situation suggests the possibility of effecting savings by developing compatible software systems and of utilizing compatible hardware systems for the processing of data for such products as nautical charts,

---

[1] It is the position of the C&GS that the continental shelf surveying and nautical charting requirements are not realistic and too conservative. No alternative calculation of these requirements was furnished.

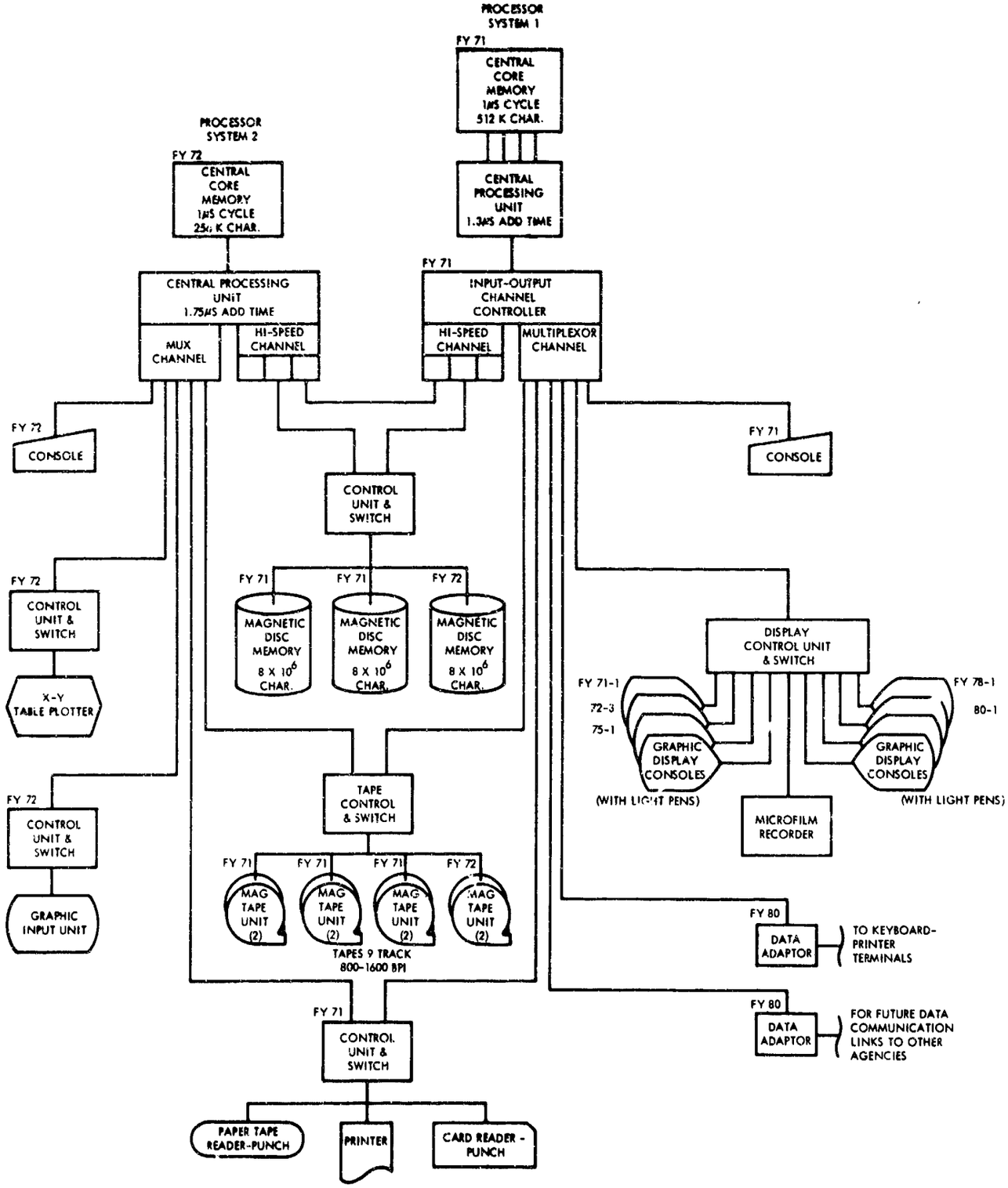

FIGURE IV-5. COAST AND GEODETIC SURVEY SYSTEM

TABLE IV-19

DATA PROCESSING HARDWARE SPECIFICATION - AGENCY: COAST AND GEODETIC SURVEY SHORE-BASED SYSTEM

	FY 71	FY 72	FY 73	FY 74	FY 75	FY 76	FY 77	FY 78	FY 79	FY 80
INPUT										
NUMBER AND TYPE INPUT RATE(1)	1 CARD READER 1000 CPM	1 GRAPHIC CURVE FOLLOWER			1 GRAPHIC CRT			1 GRAPHIC CRT		1 GRAPHIC CRT
NUMBER AND TYPE INPUT RATE	1 PAPER TAPE 1000 CHAR/SEC									
NUMBER AND TYPE INPUT RATE	1 GRAPHIC CRT CONSOLE	3 GRAPHIC CRT CONSOLE								1 DATA ADAPTOR 230K BITS/SEC
NUMBER AND TYPE INPUT RATE										1 DATA ADAPTOR 6.4M CH/S
STORAGE										
NUMBER AND TYPE CAPACITY ACCESS TIME TRANSFER RATE(2)	2 MAGNETIC DISC UNIT 8×10^6 CHAR 175 MS 156K CHAR/SEC	1 MAGNETIC DISC UNIT 8×10^6 CHAR 175 MS 156K CHAR/SEC								
NUMBER AND TYPE CAPACITY ACCESS TIME TRANSFER RATE	6 MAGNETIC TAPE 800-1600 BITS/SEC 2 MIN. 30K CHAR/SEC	2 MAGNETIC TAPE 800-1600 BITS/SEC 2 MIN 30K CHAR/SEC								
PROCESSOR										
NUMBER ARITHMETIC SPEED STORAGE CAPACITY STORAGE CYCLE TIME	1 CPU 1.7 μs ADD 512K CHARACTERS 1 μs	1 CPU 1.75 μs ADD 256K CHARACTERS 1 μs								
NUMBER ARITHMETIC SPEED STORAGE CAPACITY STORAGE CYCLE TIME										
OUTPUT										
NUMBER AND TYPE OUTPUT RATE(3)	1 PRINTER 1000 LPM	1 GRAPHIC X-Y PLOTTER 200 INCR/SEC								
NUMBER AND TYPE OUTPUT RATE	1 CARD PUNCH 300 CPM									
NUMBER AND TYPE OUTPUT RATE	1 MICROFILM RECORDER 30 FRAMES/SEC									

(1) To processor (2) To/from processor (3) From processor

TABLE IV-20

TECHNICAL DEVELOPMENT PLAN SPECIFICATION - COAST AND GEODETIC SURVEY SHIPBOARD DATA ACQUISITION AND PROCESSING - NEW HARDWARE, SOFTWARE AND COMPUTER OPERATIONS REQUIREMENTS

FY	ACTIVITY	HARDWARE REQUIREMENTS	HARDWARE PURCHASE COSTS (MILLIONS)	SOFTWARE[1] DEVELOPMENT REQUIREMENTS	SOFT ARE MAINTENANCE REQUIREMENTS	SOFTWARE PERSONNEL SHORE	SOFTWARE PERSONNEL SHIP	SOFTWARE PERSONNEL COSTS[2] (MILLIONS)	COMPUTER OPERATIONS PERSONNEL SHORE	COMPUTER OPERATIONS PERSONNEL SHIP	COMPUTER OPERATIONS PERSONNEL COSTS[3] (MILLIONS)	TOTAL ANNUAL SHIPBOARD SYSTEMS DATA PROCESSING COST[4] (MILLIONS)
71	INSTALL A COMPUTER SYSTEM ON SHORE WITH THE SAME CONFIGURATION AS SHIPBOARD SYSTEM FOR PROGRAM CHECK-OUT & DATA ACQUISITION SIMULATION		$1.228	(1) HYDROGRAPHIC PROGRAMS (15K INSTRUCTIONS) (1A) TEST DATA GENERATOR & SIMULATION PROGRAMS (10K INSTRUCTIONS)		13		$.215	10		$.100	$1.543
72	INSTALL SHIPBOARD DATA PROCESSING & INSTRUMENTATION SYSTEMS FOR (1) HYDROGRAPHIC, (2) GEOPHYSICAL & (3) OCEANOGRAPHIC SURVEYS	(1) (2) (3) 1 SHIPBOARD COMPUTER SYSTEM[a] 1 INSTRUMENTATION SYSTEM[b]	1.228 .487	(2) GEOPHYSICAL PROGRAMS (10K INSTRUCTIONS) (2A) TEST DATA GENERATOR PROGRAMS (5K INSTRUCTIONS)	(1)	9	1[c]	.150	10	1[d]	.105	1.970
73	SAME AS FY 72	SAME AS FY 72	1.228 .487	(3) OCEANOGRAPHIC PROGRAMS (10K INSTRUCTIONS (3A) TEST DATA GENERATOR (5K INSTRUCTIONS)	(1) (2)	9	2	.165	10	2	.130	2.010
74	SAME AS FY 72	SAME AS FY 72	1.228 .487		(1) (2) (3)	2	3	.075		3	.045	1.835
75	SAME AS FY 72	SAME AS FY 72	1.228 .487		(1) (2) (3)	2	4	.090		4	.060	1.865
76	SAME AS FY 72	SAME AS FY 72	1.228 .487		(1) (2) (3)	2	5	.105		5	.075	1.895
77	SAME AS FY 72	SAME AS FY 72	1.228 .487		(2) (3)	1	6	.105		6	.090	1.910
78	SAME AS FY 72	SAME AS FY 72	INSTALL FY 71 SHORE SYSTEM ABOARD SHIP .487		(3)	1	7	.120		7	.105	.712
79						1	7	.120		7	.105	.225
80						1	7	.120		7	.105	.225
TEN YEAR TOTALS (MILLIONS)			$12.405					$1.265			$.920	$14.190

(1) Assumptions: Bathymetric survey of 70% of U.S. Continental Shelf @ 1:250,000 scale in 10 years (12,000 survey miles, 100 miles wide, 1/2 mile spacing, 8 knots, 8 hrs. per day) = 100 ship-years. 70% = 70 ship-years. Increase small craft chart coverage for West Coast by 75% in 10 years 1,500 miles); increase small craft chart coverage for Alaska by 50% in 10 years (1,000 miles) (2,500 survey miles, 10 miles wide, 1/10 mile spacing, 4 knots, 8 hrs. per day) = 20 ship-years. Reduce nautical chart resurvey interval from 75 years in FY 71 to 65 years in FY 75, to 60 years in FY 80 = about 7.2% increase in resurvey workload in 10 years; resurvey of deep ocean (CGS portion) (1/10 x 73 x 10^6 sq. miles, 1/2 mile spacing, 15 knots, 24 hrs. per day x 7.2%) = 8 ship-years; resurvey U.S. coastlines (12,000 miles, 1/10 mile spacing, 8 knots, 8 hrs. per day x 7.2% = 4 ship-years. Total ship-years = 70 + 20 + 8 + 4 = 102 ship-years. Six existing ships will provide 60 ship-years. Seven new ships are assumed which would provide 42 ship years based on the above assumed schedule of new ship availability.

a 1 processor (131K byte storage), 2 I/O channels, 1 disc control unit, 4 disc drives, 4 magnetic tape drives and control, 1 card reader/punch, 4 typewriters, 1 digital plotter, 1 CRT display and light pen, 1 A/D converter and control, 1 printer, 4 strip chart recorders.

b 1 precision graphic recorder, 1 proton precision magnetometer, 1 air-sea gravity meter, 1 SST recorder, 1 XBT launcher and recorder, 1 STD, 10 nansen bottles, 1 GEK, 1 sound velocimeter, 1 thermoprobe, 1 bottom sampler, 1 corer. 1 dredge, 1 underwater camera, 1 waveheight meter, biological samplers and plankton nets 1 sub-bottom structure instrument (GEP), 1 pyrheliometer, 1 hygrothermometer, 1 anemometer, wet and dry bulb thermometers, barometers and psychrometers, 1 pinger. Seismis reflection profiler.

c Programmer/operator.

d Maintenance technician.

1. Numbers in parenthesis () indicate programs for which maintenance requirements exist.
2. Priced at $15,000 per annum per man year.
3. Priced at $10,000 per annum per man year.
4. Hardware cost and software personnel cost and computer operations personnel cost.

Table IV-21
TECHNICAL DEVELOPMENT PLAN
COAST AND GEODETIC SURVEY
TOTAL BUDGETS FOR PRIORITY DATA AND PRODUCTS

FISCAL YEAR	SHOREBASED SYSTEM BUDGET (MILLIONS)	SHIPBOARD SYSTEM BUDGET (MILLIONS)	TOTAL ANNUAL BUDGET (MILLIONS)
71	$3.075	$1.543[a]	$4.618
72	2.755	1.970	4.725
73	1.940	2.010	3.950
74	2.000	1.835	3.835
75	2.180	1.865	4.145
76	2.285	1.895	4.180
77	2.465	1.910	4.375
78	2.690	.712	3.402
79	2.795	.225	3.020
80	3.085	.225	3.310
TEN YEAR TOTALS	$25.270	$14.190	$39.460

a Excluding ship costs.

TABLE IV-22
DATA PROCESSING HARDWARE SPECIFICATION - COAST AND GEODETIC SURVEY - SHIPBOARD COMPUTER SYSTEMS

	FY 71	FY 72	FY 73	FY 74	FY 75	FY 76	FY 77	FY 78	FY 79	FY 80
INPUT										
NUMBER AND TYPE INPUT RATE(1)	1 CARD READER 1000 CPM	SAME AS FY 71								
NUMBER AND TYPE INPUT RATE	1 A/D CONVERTER 10,000 CONV/SEC									
NUMBER AND TYPE INPUT RATE	4 KEYBD. TERMINAL 10 CHAR/SEC									
NUMBER AND TYPE INPUT RATE	1 GRAPHIC DISPLAY CONSOLE									
STORAGE										
NUMBER AND TYPE CAPACITY ACCESS TIME TRANSFER RATE	4 MAGNETIC TAPE UNITS 9 TRACK 800-1600 BPI 2 MIN 30K CHAR/SEC	SAME AS FY 71								
NUMBER AND TYPE CAPACITY ACCESS TIME TRANSFER RATE	4 MAGNETIC DISC UNITS @ 8×10^6 CHARACTERS 175 MS 156K CHAR/SEC									
PROCESSOR										
NUMBER ARITHMETIC SPEED STORAGE CAPACITY STORAGE CYCLE TIME	1 CPU 1.75 μs ADD 131K CHARACTERS 1 μs	SAME AS FY 71								
OUTPUT										
NUMBER AND TYPE OUTPUT RATE(3)	1 CARD PUNCH 300 CPM	SAME AS FY 71								
NUMBER AND TYPE OUTPUT RATE	1 DIGITAL PLOTTER 200 INCR/SEC									
NUMBER AND TYPE OUTPUT RATE	1 LINE PRINTER 1000 LPM									
NUMBER AND TYPE OUTPUT RATE	4 STRIP CHART RECORDERS									

(1) To processor (2) To/from processor (3) From processor

bathymetric maps, magnetic field maps, gravity field maps, ocean station atlases, coastal atlases, and climatological atlases. This situation is not peculiar to CGS and NAVOCEANO; duplications in products and services exist throughout the producing agencies. One method of eliminating these redundancies is by the consolidation of mapping and charting functions. If this cannot be accomplished, it would be possible to achieve savings by employing common hardware and joint software development programs. The coordination of joint data management development efforts and the consideration of the establishment of data processing standards is a proper function of the coordination group and advisory committee described in Chapter V of this volume.

U.S. GEOLOGICAL SURVEY (USGS)

A major feature of the U.S. Geological Survey TDP is the recommendation that an organization be established in USGS to be the clearinghouse for the exchange of marine data and products between industry and the rest of the marine community. A constant plea of industry representatives heard during the Part I survey was for a single contact point for determining the availability and sources of Federal marine products. A second major need of industry is a directory, available from a single source, of marine data and products. The expression of these needs has been documented in the Phase II, Part I, Progress Report (Volumes One and Two).

There is an equally intense desire on the part of university scientists for a mechanism to improve the flow of marine data from industry to universities. Although little can be done to secure the release of data considered proprietary by industry and universities, the establishment of a single and recognized source for the exchange of data will at least increase the flow of non-proprietary data. It is conceivable that, once the data exchange group in the USGS is established, methods may be found to shorten the length of time during which certain data remain proprietary. It is recommended that certain parts of the data exchange operation be automated. This consists of the establishment of an automated file which will contain information describing the characteristics and sources of available industry data and the characteristics of data available to industry from university and Federal sources. A request file will also be created which will contain the pending requests for data received from industry and non-industry sources. When requests for data are received, they will be compared by computer program with the characteristics of existing available data in order to determine whether data exist which meet the needs of the requester. Whenever new information concerning the availability of data is received at USGS, it will be posted to the file and simultaneously compared with the pending request file. A copy

of the file on available data would be made available to NODC for incorporation in the National Marine Data Inventory (NAMDI). In all cases where marine data directories or inventories are developed by agencies other than NODC, a complete copy or a summarized copy of the directory should be provided NODC so that a complete inventory of marine data will be available in one location, and to facilitate the referral of requests by NODC to other agencies.

The automated request-data availability file will also permit the USGS to make a statistical analysis of the demands for data. This information will provide guidelines for efforts to obtain industry data and to obtain data needed by industry. The next step in the data exchange program is the storage and subsequent retrieval for requesters of actual data submitted by industry to the USGS under the proposed program. This data will be automatically retrieved and produced in hard copy or machine-readable form according to the needs of the requester. This system will employ programmed safeguards which will inhibit the retrieval of data for unauthorized requesters in those cases where industry places restrictions on the dissemination of their data. A similar file of data available for distribution to industry will be maintained and will be automatically retrieved as matches are found between requests and available data. Safeguards would also be provided to inhibit the release of data or to release it with restrictions on its use, if limitations on dissemination are imposed by the data provider. The time phasing for implementation of these recommendations is shown in Table IV-23.

A second important role of USGS in marine data management is its responsibility for providing centralized computer services for the Department of the Interior and the operation of a proposed national network of satellite computer and data terminal facilities at USGS field locations, e.g., Menlo Park. As part of the 10-year plan, it is recommended that USGS provide computer system management services in conjunction with the expansion in BCF, BSF&W and FWPCA marine data activities which require the use of the USGS computer network. For example,

TABLE IV-23
PROPOSED IMPLEMENTATION SCHEDULE - PRIORITY PRODUCTS AND DATA
U.S. GEOLOGICAL SURVEY (USGS)

	FISCAL YEAR									
	71	72	73	74	75	76	77	78	79	80
DEVELOP FOR DISTRIBUTION DIRECTORY OF MARINE GEOLOGICAL PRODUCTS AND DATA USED IN PRODUCTS[1]										
DEVELOP FOR DISTRIBUTION SHIP TRACK MAPS PERTAINING TO GEOLOGICAL PRODUCTS AND DATA COLLECTED ALONG TRACKS. CORRELATE WITH PRODUCT AND DATA DIRECTORY										
IMPLEMENT MARINE GEOLOGICAL PRODUCT INDEX[2] AND SHIP TRACK PLOTS AND NARRATIVES										
DEVELOP DATA AND PRODUCT DESCRIPTORS AND AUTOMATED DESCRIPTOR FILES FOR SEISMIC PROFILES, BOTTOM CORES, BOTTOM SEDIMENT CHARTS, BOTTOM TEMPERATURE AND HEAT FLOW CHARTS, GEOLOGICAL MAPS, AND GEOLOGICAL REPORTS. CORRELATE THIS DATA WITH MARINE GEOLOGICAL PRODUCT INDEX										
DEVELOP AUTOMATED USGS PROFESSIONAL PAPER BIBLIOGRAPHY. COORDINATE WITH SOSC INFORMATION LINKAGES PROJECT										
IMPLEMENT CONSOLIDATED DATA AND PRODUCT DESCRIPTOR, PRODUCT DIRECTORY AND PROFESSIONAL PAPER INDEX, AND SHIP TRACK FILE ON USGS COMPUTER[3]										
PROVIDE INPUT TO NAVOCEANO FOR BOTTOM CHARACTERISTICS PORTION OF OCEAN ENGINEERING REPORTS AND TO NODC FOR OCEAN ENGINEERING DATA										
MANAGE USGS 360/365 COMPUTER AND SUBSEQUENT COMPUTERS FOR USGS, BCF, BSF&W, AND FWPCA MARINE DATA AND PRODUCT ACTIVITIES										
PERFORM 4TH GENERATION COMPUTER FEASIBILITY STUDY										
INSTALL 4TH GENERATION COMPUTER										
ESTABLISH COMPONENT IN USGS TO ACT AS CLEARINGHOUSE FOR THE EXCHANGE OF DATA BETWEEN INDUSTRY AND THE REST OF MARINE COMMUNITY										

[1] Would consist of products of Federal Government, industry, states & universities

[2] A copy of this file would become a part of NAMDI

[3] A summary of this would become a part of NAMDI

TABLE IV-23 (CONT'd)
PROPOSED IMPLEMENTATION SCHEDULE - PRIORITY PRODUCTS AND DATA
U.S. GEOLOGICAL SURVEY (USGS)

	FISCAL YEAR									
	71	72	73	74	75	76	77	78	79	80
ESTABLISH AUTOMATED FILE OF INFORMATION DESCRIBING THE AVAILABILITY OF INDUSTRY DATA AND THE AVAILABILITY OF DATA NEEDED BY INDUSTRY[3]										
MAINTAIN AUTOMATED INDUSTRY DATA AVAILABILITY - NEEDS FILE ON CURRENT BASES WITH INPUTS FROM INDUSTRY AND THE REST OF THE MARINE COMMUNITY										
DEVELOP DATA BASES OF RAW DATA SUBMITTED BY INDUSTRY FOR DISTRIBUTION TO OTHER PARTIES (PERPETUAL FUNCTION)										
COLLECT DATA NEEDED BY INDUSTRY FROM OTHER AGENCIES AND DISTRIBUTE TO AGENCIES (PERPETUAL FUNCTION)										

[3] A summary of this would become a part of NAMDI

BCF and BSF&W will be users of the USGS Washington, D.C., computer and possibly users of its national network for fishery, statistics, forecasts and advisories (see BCF and BSF&W section of TDP). The services to be provided by USGS consist of systems (operating systems, computers, utility programs, etc.) software development and implementation for Washington D.C. operations and the national network and computer operations for the Washington D.C. system. In those situations where other Department of the Interior agencies use USGS computer facilities, it is proposed that these agencies provide the application software development, e.g., fishery statistics programs, and computer operations personnel for field computer operations concerned with non-USGS applications. This USGS system management function is mentioned in Table IV-23, and increased personnel requirements for its implementation are a part of the Technical Development Plan Specification, Table IV-24.

Other elements of the TDP include:

1. Development and publication of a directory of marine geological products and data.

2. Development and publication of ship track maps showing ship tracks and the characteristics of geological and geophysical data collected along the tracks.

3. Automation of geological product index (also to become part of NAMDI) and ship track plots with associated data and product descriptions.

4. Development of improved methods for describing and indexing marine geological products and data (seismic profiles, bottom cores, bottom sediment charts, bottom temperature and heat flow charts, geological maps and geological reports) and correlation of these data with the marine geological product index.

5. Development of an automated USGS professional paper bibliography.

TABLE IV-24
TECHNICAL DEVELOPMENT PLAN SPECIFICATION - U.S. GEOLOGICAL SURVEY (USGS) - PRIORITY PRODUCTS AND DATA

FY	NEW EQUIPMENT REQUIREMENTS	NEW EQUIPMENT COSTS (MILLIONS)	NUMBER OF ADDITIONAL DISCIPLINE PERSONNEL[1]	NUMBER OF ADDITIONAL ANALYSTS/ SOFTWARE PERSONNEL		ADDITIONAL PERSONNEL COSTS[2] (MILLIONS)	EXISTING USGS MARINE BUDGET[3] (MILLIONS)	TOTAL ANNUAL BUDGET (MILLIONS)
				SOFTWARE DEVELOPMENT	COMPUTER OPERATIONS[5]			
71			8	6	5	$.320	$3.570	$3.890
72			7	9	5	.350	3.749	4.099
73			2	7	5	.245	3.936	4.181
74			2	7	5	.245	4.133	4.378
75			2	7	5	.245	4.340	4.585
76			4	10	5	.320	4.557	4.877
77	4TH GENERATION COMPUTER	$.500 (MARINE ACTIVITIES SHORE)[4]	4	13	5	.365	4.785	5.650
78			4	12	5	.350	5.024	5.374
79			4	12	5	.350	5.275	5.625
80			4	12	5	.350	5.539	5.889
TEN YEAR TOTALS		$.500				$3.140	$44.908	$48.548

NOTES: (1) PRIORITY PRODUCTS AND DATA CONSIST OF: GEOLOGICAL REPORTS, GEOLOGICAL MAPS, BOTTOM SEDIMENT CHARTS, BOTTOM TEMPERATURE AND HEAT FLOW CHARTS, BOTTOM CORES AND SAMPLES, AND SEISMIC PROFILES. (2) ALL ADDITIONAL PERSONNEL REQUIREMENTS PERTAIN TO ADDITIONS TO THE PRESENT STAFF FOR THE PERIODS INDICATED, E.G., 9 ANALYSTS FOR FY 72 AND 7 FOR FY 73; PERSONNEL REQUIREMENTS ARE NON-CUMULATIVE.

1 Geologists and geophysicists

2 Discipline and software development personnel priced @ $15,000 per annum; computer operations personnel priced @ $10,000 per annum

3 Compound annual five percent increase

4 Twenty-five percent of $2,000,000 (total USGS computer-equipment cost) charged to marine activities

5 Five computer operations people charged to marine activities

6. Furnishing of continental shelf geological and geophysical data to NAVOCEANO for incorporation into the proposed ocean engineering reports and handbooks (see NAVOCEANO TDP) and to NODC for incorporation into proposed NODC ocean engineering data bases (see NODC TDP).

The inclusion of items 1, 2 and 3 was motivated primarily by the expressed needs of industry for ship track plots and the characteristics of data collected along the tracks and the characteristics of products produced from the collected data. However, both the geological product index and the ship track information would be of value to other segments of the marine community.

Item 4 concerns the development of descriptor and locator files (containing information pertaining to the physical location of data, e.g., a microfilm reel of seismic profiles) for geological and geophysical data and products which are difficult to automate, e.g., bottom cores and seismic profiles. It is recommended that descriptors and files be developed for retrieving information about the data, not the data itself. A potential user of the data will then be able to query a file for information which will permit him to determine the availability of data of interest. If data of interest are available, the system would also provide information on the physical location of the data, such as the name and address of the data source, shelf number, and reel and frame numbers of microfilm recordings of seismic profiles. The location information is also used for the physical inventory control of data and samples.

The advantages of such a system are that (1) one does not try to digitize data which is not amenable to digitization, (2) resources are not committed to a detailed examination of data or samples which are awkward to handle until it has been established that the data are of potential interest, and (3) the physical retrieval of data and samples can be facilitated by incorporating location information in the descriptor files. As a minimum, the descriptor and locator files should contain:

- Identification of cruise or survey, data collector and geographical area pertaining to the data or sample collection.
- Time period of data collection correlated with geographical information.
- Minimum, mean and maximum values, where appropriate, e.g., bottom temperature and heat flow.
- Data or sample characteristics, where appropriate, e.g., core dimensions, porosity, compression and shear characteristics.
- Data and sample quality, if available.

It is recommended that the above data management procedures be employed in all agencies which store analog recordings, samples and specimens.

Item 5 concerns the development of an automated professional paper bibliography and its incorporation into the automated product index and ship track file mentioned in item 3. Information would be recorded in a manner to provide association of related products, data, ship tracks and research reports. The linkage of these items provides, in an integrated fashion, information on the who, where, when, and results of data collection, data analysis and product preparation.

Item 6 refers to the recommended USGS contribution to a coordinated effort involving--in addition to USGS--NOVOCEANO, CERC and NODC for the purpose of increasing the availability and usefulness of ocean engineering data and products.

Finally, in recognition of the fact that agencies normally upgrade their computer capabilities within a decade, the TDP includes a provision for the marine pro rata share (estimated at 25 percent) of the cost of replacing the current USGS computer system. This is estimated to occur in FY 77 (see Table 23).

The Technical Development Plan Specification is shown in Table IV-24. Costs are shown for additional resources which are required in order to implement the TDP. In addition, the so-called normal budget for USGS marine activities is shown. This amount is arrived at by applying a compound 5 percent annual increase to the existing marine budget. These yearly amounts are added to the additional amounts required in order to arrive at the annual and 10-year budgets required for TDP implementation. The total 10-year requirement is $48.548 million.

MARINE FORECASTING, RESEARCH AND SUPPORT

WEATHER BUREAU OFFICES

Weather Bureau office responsibilities for furnishing priority marine products are shown in Table IV-25. As previously indicated in the CERC section, the utilization of a national coastal network of wave gauge stations for coastal weather, wave and surf monitoring and forecasting is recommended. It is also recommended that instrumentation for obtaining other parameters, such as wind speed and direction, pressure, air temperature, water temperature, and humidity be installed at the gauge sites and that these data be telemetered along with wave height and direction to the 14 Weather Bureau offices shown in Figure IV-6. This system will permit the Weather Bureau to automatically acquire instrumented surface and wave observations, to detect and report severe waves and to employ the data in making coastal weather, wave and surf forecasts. The distribution of data from the various proposed instrumented stations to the Weather Bureau offices is shown in Figure IV-6. The frequency, duration and sampling rate of obtaining observations would be under the control of computers in local offices. The operation of these computers and the transmission of data over telephone lines is described in the CERC section.

The TDP for the development of this system is shown in Table IV-26. This TDP contains requirements for:

1. Computers for 14 local WB offices.
2. Communication equipment and line charges for telemetering data to WB offices.
3. Cost sharing with CERC of wave gauge installations.
4. Software requirements for the development of data acquisition; spectral analysis; surface observation editing and plotting; and plots and listings for wave statistics, spectral analysis, SST charts and surface observations.

TABLE IV-25

PRIORITY PRODUCTS - WEATHER BUREAU OFFICE RESPONSIBILITIES

WEATHER BUREAU OFFICE[a]	COASTAL WEATHER AND WAVE FORECAST	HIGH SEAS FORECAST	TROPICAL CYCLONE FORECAST	TROPICAL CYCLONE WARNING	STORM SURGE AND ANOMALOUS TIDES INCLUDED IN AREA ADVISORIES	SURF FORECAST	DOMESTIC ICE FORECASTS	SEICHE WARNINGS
CHICAGO, ILLINOIS	X							X
NEW ORLEANS, LA.*	X			X	X			
SAN ANTONIO, TEXAS	X							
SAN JUAN, PUERTO RICO*	X			X	X			
NEW YORK, N.Y.	X							
BOSTON, MASS.*	X			X	X			
WASHINGTON, D.C.*	X	X		X	X			
RALEIGH, N.C.	X				X			
MIAMI, FLORIDA	X		X NHC	X NHC	X NHC			
LOS ANGELES, CALIF.	X				X	X		
SAN FRANCISCO, CALIF.*	X	X	X	X	X			
SEATTLE, WASH.	X				X			
HONOLULU, HAWAII*	X	X	X	X	X			
ANCHORAGE, ALASKA	X						X	

*Area Forecast Center

a. Only the fourteen weather bureaus considered in the Technical Development Plan are listed.

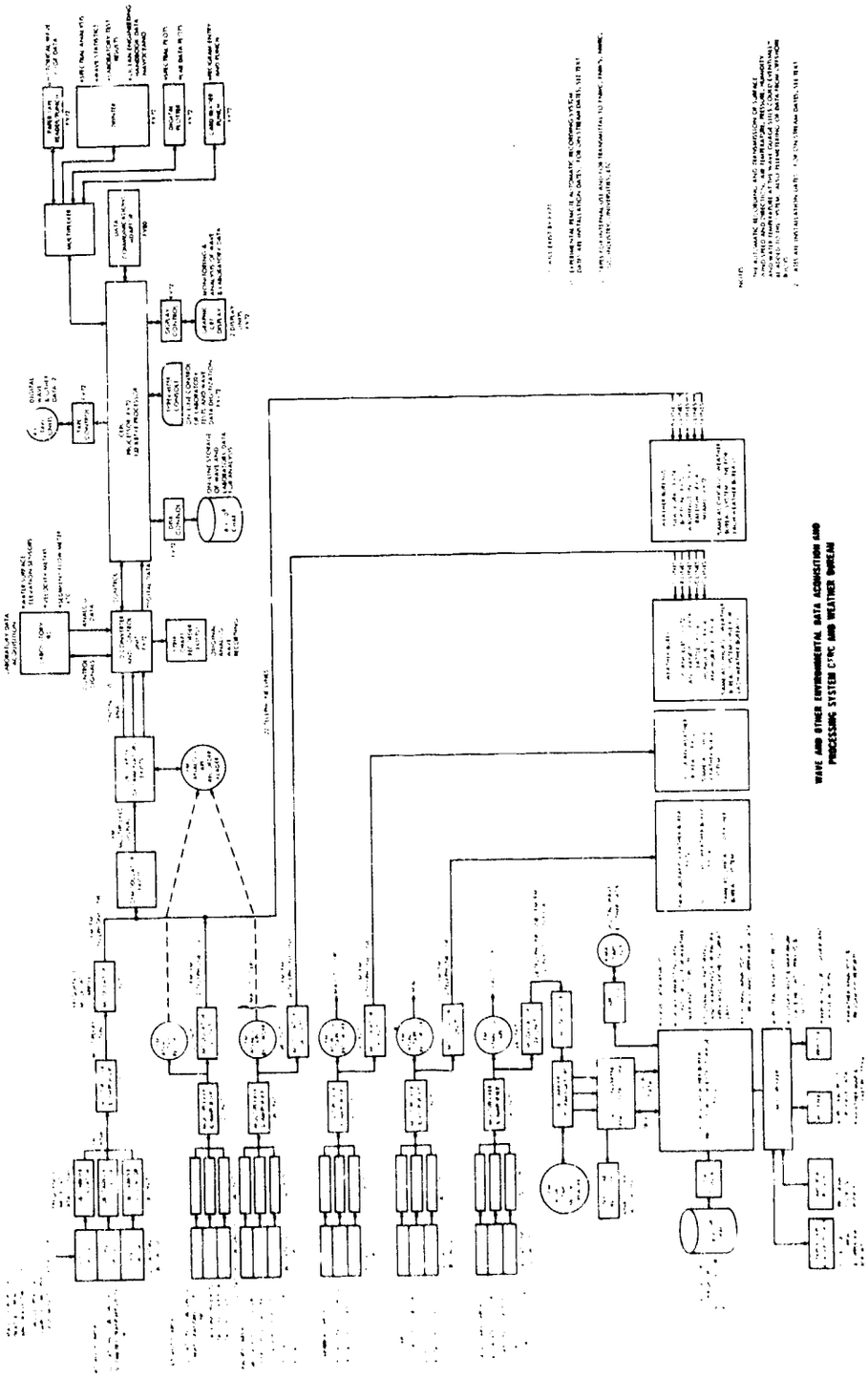

FIGURE IV-6. WAVE AND OTHER ENVIRONMENTAL DATA ACQUISITION AND PROCESSING SYSTEM CCASTAL ENGINEERING RESEARCH CENTER AND WEATHER BUREAU

TABLE IV-26

TECHNICAL DEVELOPMENT PLAN SPECIFICATION - WEATHER BUREAU OFFICES[a] PRIORITY PRODUCTS AND DATA - NEW HARDWARE, SOFTWARE AND COMPUTER OPERATIONS REQUIREMENTS

FY	ACTIVITY*	HARDWARE REQUIREMENTS	HARDWARE COSTS (MILLIONS)	SOFTWARE DEVELOPMENT REQUIREMENTS	SOFTWARE(1) MAINTENANCE REQUIREMENTS	SOFTWARE PERSONNEL	SOFTWARE PERSONNEL COSTS(2) (MILLIONS)	COMPUTER OPERATIONS PERSONNEL	COMPUTER OPERATIONS PERSONNEL COSTS(3) (MILLIONS)	TOTAL ANNUAL DATA PROCESSING COSTS(4) (MILLIONS)
71	(1) BEGIN DEVELOPMENT OF TELEMETERED COASTAL WAVE DATA ACQUISITION AND ANALYSIS PROGRAMS AT WEATHER BUREAU OFFICES. (2) AUGMENT SERVICE C TELETYPEWRITER NETWORK FOR INCREASED SURFACE & UPPER AIR OBSERVATIONS	(2) 13 TELETYPES PLUS 23,460 MILES OF TELETYPEWRITER LEASED LINES	$.182[d]	(1) DEVELOP COMMON SOFTWARE FOR COASTAL WAVE DATA ACQUISITION & A/D CONVERSION (15K INSTRUCTIONS)		4	$.060			$.242
72	(1) INSTALL DATA PROCESSING SYSTEMS AT CHICAGO, NEW ORLEANS, SAN JUAN, BOSTON, MIAMI, AND LOS ANGELES WEATHER BUREAU OFFICES (1) INSTALL 29 WAVE GAUGE STATIONS (1) INSTALL TELEMETERING EQUIPMENT (1) PROVIDE DATA TRANSMISSION (2) AUGMENT SERVICE C TELETYPEWRITER NETWORK	(1) (2) (3) (4) 6 DATA PROCESSING SYSTEMS[e] (1) 87 WAVE GAUGES (1) (3) 49 SETS OF MODULATOR MULTIPLEXER, DEMODULATOR, DISCRIMINATOR 7.9K MILES OF TELEPHONE LINE (2) 15 TELETYPES PLUS LINE FACILITIES	$.742[b] $.261[c] $.008[b] $.204[d] $.186[d]	(1) DEVELOP COMMON SOFTWARE FOR WAVE DATA STATISTICS COMPUTATIONS (10K INSTRUCTIONS) ADAPT WAVE SPECTRA ANALYSIS PROGRAMS (5K INSTRUCTIONS) (1) DEVELOP COMMON SOFTWARE FOR WAVE SPECTRA PLOTS AND DISPLAYS (5K INSTRUCTIONS) (1) DEVELOP SOFTWARE FOR DETECTING & REPORTING UNUSUAL WAVE OR TIDE ACTION (TSUNAMI, SEICHE, LARGE METEOROLOGICAL TIDES) (15K INSTRUCTIONS)		14	.210	60	$.[illegible]0	.211
73	(3) BEGIN DEVELOPMENT OF TELEMETERED SURFACE COASTAL METEOROLOGICAL PARAMETER ACQUISITION & ANALYSIS PROGRAMS AT WEATHER BUREAU OFFICES (2) AUGMENT SERVICE C TELETYPEWRITER NETWORK	(2) 17 TELETYPES PLUS LINE FACILITIES	.188[d]	(3) DEVELOP COMMON SOFTWARE FOR COASTAL SURFACE METEOROLOGICAL DATA ACQUISITION (10K INSTRUCTIONS)		10	.1[illegible]	60	.600	.938
74	(4) BEGIN DEVELOPMENT OF ADP EDITING & FORMATTING OF OCEAN SURFACE & UPPER AIR DATA (1) INSTALL DATA PROCESSING SYSTEMS AT SAN ANTONIO, NEW YORK, RALEIGH, HONOLULU, & ANCHORAGE WEATHER BUREAU OFFICES (1) INSTALL 39 WAVE GAUGE STATIONS. INSTALL TELEMETERING EQUIPMENT (1) PROVIDE DATA TRANSMISSION (2) AUGMENT SERVICE C TELETYPEWRITER NETWORK	(1) (2) (3) (4) 5 DATA PROCESSING SYSTEMS[e] (1) 117 WAVE GAUGES (1) (3) 39 SETS OF MODULATOR, MULTIPLEXER DEMODULATOR, DISCRIMINATOR EQUIPMENT 20.7K MILES OF TELEPHONE LINE (2) 20 TELETYPES PLUS LINE FACILITIES	2.785[b] .351[c] .016[b] .524[d] .193[d]	(4) DEVELOP COMMON SOFTWARE FOR OCEAN SURFACE AND UPPER AIR OBSERVATION EDITING AND FORMATTING (5K INSTRUCTIONS)	(1)	8	.12[illegible]	113	1.[illegible]0	[illegible].089

* Initiation of Improved Product/Service or New Product/Service.

a Chicago, New Orleans, San Antonio, San Juan, New York, Boston, Washington, Raleigh, Miami, Los Angeles, San Francisco, Seattle, Honolulu, & Anchorage

b Purchase.

c 50% of purchase cost allocated to Weather Bureau

d Lease charge

e Each with 1 A/D converter & control unit, 1 processor, 1 disc cont., 1 disc storage unit, 1 typewriter console, 1 CRT display control, 2 graphic CRTs, 1 tape control, 4 magnetic tape units, 1 per tape reader/punch, 1 printer, 1 plotter, 1 card reader punch

1. Numbers in parenthesis indicate programs for which maintenance requirements exist.
2. Priced at $15,000 per annum per man year.
3. Priced at $10,000 per annum per man year.
4. Hardware cost and software personnel cost and computer operations personnel cost.

NOTE: Number in parenthesis () associate related items, e.g., hardware is required in FY 71 through FY 74 for service C teletypewriter network, software development is required in FY 71 and FY 72 for coastal waves, data acquisition and analysis.

TABLE IV-26 (CONT'D)

TECHNICAL DEVELOPMENT PLAN SPECIFICATION - WEATHER BUREAU OFFICES[a] PRIORITY PRODUCTS AND DATA - NEW HARDWARE, SOFTWARE AND COMPUTER OPERATIONS REQUIREMENTS

FY	ACTIVITY*	HARDWARE REQUIREMENTS	HARDWARE COSTS (MILLIONS)	SOFTWARE DEVELOPMENT REQUIREMENTS	SOFTWARE MAINTENANCE REQUIREMENTS	SOFTWARE PERSONNEL	SOFTWARE PERSONNEL COSTS (MILLIONS)	COMPUTER OPERATIONS PERSONNEL	COMPUTER OPERATIONS PERSONNEL COSTS (MILLIONS)	TOTAL ANNUAL DATA PROCESSING COST (MILLIONS)
75	(5) BEGIN DEVELOPMENT OF ADP FOR WEATHER MAP PLOTS (2) AUGMENT SERVICE [illegible] TELETYPEWRITER NETWORK (1) PROVIDE DATA TRANSMISSION	(2) (2) TELETYPES PLUS LINE FACILITIES (1) (3) [illegible] MILES OF TELEPHONE LINES	.148[d] .524[d]	(5) DEVELOP COMMON SOFTWARE FOR WEATHER MAP & SST CHART PLOTS AND DISPLAYS & ASSOCIATED REPORTS (10K INSTRUCTIONS)	(1) (3) (4)	6	$.090	110	$1.100	$1.912
76	(1) INSTALL DATA PROCESSING SYSTEMS AT SAN FRANCISCO, SEATTLE, & WASHINGTON WEATHER BUREAU OFFICES (1) INSTALL WAVE RADAR STATIONS (1) INSTALL TELEMETERING EQUIPMENT (1) PROVIDE DATA TRANSMISSION (2) AUGMENT SERVICE [illegible] TELETYPEWRITER NETWORK	(1) (2) (3) (4) [illegible] DATA PROCESSING SYSTEMS (2) [illegible] WAVE RADARS (1) (4) [illegible] SETS OF MODULATOR, MULTIPLEXER, DEMODULATOR EQUIPMENT [illegible] MILES OF TELEPHONE LINES (2) 26 TELETYPES PLUS LINE FACILITIES	2.021[c] .049[c] .565[d] .202[d]		(1) (3) (4)	6	.090	140	1.400	5.236
77	(1) PROVIDE DATA TRANSMISSION (2) AUGMENT SERVICE [illegible] TELETYPEWRITER NETWORK	(1) [illegible] MILES OF TELEPHONE LINES (2) 26 TELETYPES PLUS LINE FACILITIES	.565[d] .202[d]		(1) (3) (4) (5)	4	.060	140	1.400	2.231
78	(1) PROVIDE DATA TRANSMISSION (2) AUGMENT SERVICE [illegible] TELETYPEWRITER NETWORK	(1) [illegible] MILES OF TELEPHONE LINES (2) [illegible] TELETYPES PLUS LINE FACILITIES	[illegible] [illegible]		(1) (3) (4) (5)	4	.060	140	1.400	2.235
79	(1) PROVIDE DATA TRANSMISSION (2) AUGMENT SERVICE [illegible] TELETYPEWRITER NETWORK	(1) [illegible] MILES OF TELEPHONE LINES (2) [illegible] TELETYPES PLUS LINE FACILITIES	[illegible] [illegible]		(1) (3) (4) (5)	2	.030	140	1.400	2.209
[illegible]	(1) PROVIDE DATA TRANSMISSION (2) AUGMENT SERVICE [illegible] TELETYPEWRITER NETWORK [illegible]	(1) [illegible] MILES OF TELEPHONE LINES (2) [illegible] TELETYPES PLUS LINE FACILITIES (1) [illegible] DATA PROCESSING SYSTEMS	[illegible]		[illegible]	2	.015	140	1.400	[illegible]
TEN YEAR DATA PROCESSING COSTS			[illegible]				$ [illegible]		$17.400	[illegible]

* [illegible] of Input/Output Devices & Service to New Products Service

a [illegible] New Orleans, San Antonio, San Juan, New York, Portland, Washington, Raleigh, Miami, Los Angeles, San Francisco, Seattle, [illegible], Honolulu, & Anchorage.

b [illegible]

c [illegible] not [illegible] related to Weather Bureau.

d [illegible] Charge

e [illegible] with [illegible] printer & [illegible] unit, [illegible] process [illegible] disk storage unit, [illegible] typewriter console, [illegible] CRT display control, [illegible] graphic CRTs, [illegible] tape control, [illegible] magnetic tape units, [illegible] paper tape reader punch [illegible] printer, [illegible] plotter, [illegible] card reader punch.

TABLE IV-27

TECHNICAL DEVELOPMENT PLAN SPECIFICATION -
WEATHER BUREAU OFFICES[a] PRIORITY PRODUCTS AND DATA

FISCAL YEAR	NUMBER OF MARINE FORECASTERS[a]	ANNUAL COST OF MARINE FORECASTING PERSONNEL (MILLIONS)	TOTAL ANNUAL DATA PROCESSING COST (MILLIONS)	TOTAL ANNUAL BUDGET (MILLIONS)
71	28	$ .420	$ .242	$ .662
72	30	.450	7.211	7.661
73	34	.510	.938	1.448
74	38	.570	7.089	7.659
75	40	.600	1.912	2.512
76	46	.690	5.236	5.926
77	50	.750	2.231	2.981
78	54	.810	2.235	3.045
79	60	.900	2.209	3.109
80	66	.990	1.765	2.755
		$6.690	$31.633	$38.323

[a]Equivalent of two forecasters assumed for marine work in each of the 14 Weather Bureau offices @ $15,000 per year including benefits. Ten percent annual increase in personnel applied to marine forecasting assumed.

Future requirements for the transmission of marine surface observations over the Service C Teletypewriter Network have also been developed. Numbers of observations from buoys and ships; requirements for Teletype terminal equipment, Teletype circuits and operating personnel have been computed. The cost of these facilities for transmitting marine surface observations over land for the next ten years is shown in Table IV-26.

The 10-year equipment (computers, wave gauges, communication terminals equipment, communication line charges) cost for the 14 Weather Bureau Offices is $19,783,000. The cost of computer operations personnel (for 14 installations) for the next 10 years is also sizeable, totaling $10,400,000. The total ten-year data processing cost is $31,633,000. Requirements for marine forecasting personnel in the 14 offices are shown in Table IV-27. Currently, there is an average of two people[1] in each office employed full time with marine services. An annual five percent increase in marine forecasting personnel is projected. Ten-year forecasting personnel costs for the 14 offices is $6,690,000. The total 10-year cost (forecasting personnel plus data processing costs) is $38,323,000. This amount does not include the cost of operating NMC. In the case of the Weather Bureau, data processing costs far outweigh the cost of application personnel. Data processing hardware characteristics are shown in Table IV-28.

[1] According to ESSA Plans and Programs.

TABLE IV-28

DATA PROCESSING HARDWARE SPECIFICATION - AGENCY: WEATHER BUREAU

	FY 71	FY 72*	FY 73	FY 74**	FY 75	FY 76***	FY 77	FY 78	FY 79	FY 80
INPUT										
NUMBER AND TYPE INPUT RATE(1)		1 CARD READER 1000 CPM		SAME AS FY 72		SAME AS FY 72				1 DATA ADAPTOR 230K BITS/SEC
NUMBER AND TYPE INPUT RATE		1 PAPER TAPE READER 1000 CPS								
NUMBER AND TYPE INPUT RATE		1 A/D CONVERTER 10,000 CONV/SEC								
STORAGE										
NUMBER AND TYPE CAPACITY ACCESS TIME TRANSFER RATE(2)		4 MAGNETIC TAPE UNITS @ 800-1600 BPI 2 MIN 30K CHAR/SEC		SAME AS FY 72		SAME AS FY 72				
NUMBER AND TYPE CAPACITY ACCESS TIME TRANSFER RATE		1 DISC UNIT @ 8×10^6 CHAR/SEC 175 MS 156K CHAR/SEC								
PROCESSOR										
NUMBER ARITHMETIC SPEED STORAGE CAPACITY STORAGE CYCLE TIME		1 CPU 1.3 μs ADD 131K CHARACTERS 1 μs		SAME AS FY 72		SAME AS FY 72				
OUTPUT										
NUMBER AND TYPE OUTPUT RATE(3)		1 CARD PUNCH 300 CPM		SAME AS FY 72		SAME AS FY 72				
NUMBER AND TYPE OUTPUT RATE		1 PAPER TAPE PUNCH								
NUMBER AND TYPE OUTPUT RATE		1 DIGITAL PLOTTER 200 INCH/SEC								

* One system each for the following Bureaus: Chicago, San Juan, Boston, Miami, New Orleans, and Los Angeles

** One system each for the following Bureaus: New York, Raleigh, Honolulu, and Anchorage.

*** One system each for the following Bureaus: Washington, San Francisco, and Seattle

(1) To processor (2) To/from processor (3) From processor

FLEET NUMERICAL WEATHER CENTRAL (FNWC) AND NATIONAL METEOROLOGICAL CENTER (NMC)

This section of the TDP deals with the priority data and product requirements of NMC and FNWC. These organizations are considered together because the primary emphasis in their operations is on real-time as opposed to historical data processing. In addition, many of their requirements are common. The major problems in marine forecasting are an inadequate observational network and the need for additional research for improvements in environmental forecasting models. The two problems are closely related. For example, the inclusion of heat exchange terms between the ocean and atmosphere in long range forecasting models generates requirements for new means to obtain sea surface temperature data. Conversely, the availability of additional SST data through improvements in methods for data collection, such as the ART, influence the design of forecast models. It is not suggested that there are no problems in the processing and handling of data within the forecast centers, but, rather, that major improvements in the quality of forecasting will come as a result of improvements in modeling and data acquisition.

The need to expand the oceanographic and meteorological network for the measurement of SST, [illegible] temperature, salinity and surface meteorological parameters (wind speed, wind direction, air temperature pressure and humidity) is great, yet major obstacles exist in making significant improvements in either the number or quality of observations. The problem is particularly severe with respect to BT measurements, since these are not obtained from merchant ships except for a few ships of opportunity. The number of ships--merchant (U.S. and foreign), naval, Coast Guard, USGS, and those of institutions--will not expand sufficiently within the next decade to have a significant impact on the density of observations provided. Yet, a need exists to expand the number of SST observations by a factor of 5 to 6.[1] The implementation of the

[1] Federal Plan for Marine Environmental Prediction, 1 July 1968, p. 142.

National Data Buoy System has been slowed by funding problems. A complete system of several hundred buoys will not be operational until FY 76, at the earliest. Satellites as remote-sensing platforms are only capable of measuring surface phenomena. The number of ships available as oceanographic and meteorological platforms is relatively fixed, and they lack the mobility necessary to cover large areas in a short time. Aircraft operating from land and aircraft carriers are an attractive alternative. Aircraft are highly mobile, can be deployed in large numbers and can obtain surface meteorological parameters and a limited number of oceanographic parameters such as SST (using ART) and water temperature (using AXBT). Unfortunately, the cost of operating aircraft for data collection is high--on the order of $500,000 per aircraft year. A combination of equipping additional existing naval and merchant ships and aircraft with recorders for obtaining surface temperature, water temperature profiles, surface meteorological parameters (wind speed, wind direction, air temperature, pressure and humidity) and sea state (from aircraft by radar altimeter or scatterometer), is an alternative which will provide significant improvements in the density and distribution of oceanic and air sea interaction measurements, but not at the prohibitive cost which would be incurred if aircraft alone are employed. The problem of determining the optimum combination of platforms, and their spatial distribution and temporal sampling rates, is complex, and no definitive work exists in this area.

This TDP provides a plan for data acquisition which is based on the incomplete information which exists in the marine and meteorological communities concerning the constituents of an optimum marine observation network. In order to determine the optimum configuration and density of platforms, parameters and sampling rates, it would be necessary to have available quantitative information on the incremental relationship between quality of marine forecasts and the type, number, frequency and density of data points. This information does not exist.

This plan does not address the need for upper air data over the oceans, because these data are nonmarine parameters; nor does it consider the requirements for

buoys, which have been covered in the Coast Guard sponsored National Data Buoy System study. It should be mentioned, however, that the requirement for additional upper air data over the oceans is considered one of the most important for improving the accuracy and extending the period of hemispheric forecasts.[1,2] Some information concerning the requirements for ocean surface measurements may be gleaned from the following:

- Measurements of SST should be made at a grid spacing of approximately 300 miles.[3]
- Observation frequency should be in the range of twice to four times per day.[3]
- Atmospheric pressure should be measured to 1 mb, atmospheric temperature to 1°C, wind speed to 20 percent, wind direction to 10°, and sea surface temperature to 1°C.[3]
- In an area with complex thermal properties, 30 SST temperature observations (mostly ART) are required for 95 percent SST chart reliability in a 5 degree square (250 x 250 n. mile).[4] This is equivalent to one observation per 2,080 square n. miles, or an area of 45 x 45 n. miles.

The key elements of the recommended ten-year plan for ocean surface data collection follows:

---

[1] P. M. Wolff, Oceanographic Data Collection, IBM Scientific Computing Symposium on Environmental Sciences, November 14-16, 1966, p. 44.

[2] Frederick G. Shuman, National Meteorological Center, Meteorological Parameters Required in an Automatic Data Processing Complex, February 10-14, 1969.

[3] The Feasibility of a Global Observation and Analysis Experiment, National Academy of Sciences, National Research Council, Washington, D.C., 1966.

[4] R. W. James Data Requirements for Synoptic Sea Surface Temperature Analysis, 4th U.S. Navy Symposium on Military Oceanography, May 1967, p. 150.

- 304 naval and 504 merchant ships equipped for automatic SST, SXBT or expendable STD and surface meteorological data collection by 1980.

- 10 aircraft for daily SST, AXBT or expendable STD, sea state, and surface meteorological automatic data collection during the coming decade.

- An average daily XBT or STD automatic recording density of one XBT per every 300 x 300 mile grid from ships for the Atlantic and Pacific Oceans and Mediterranean Sea (10^8 square miles, total) by 1980 (1,120 XBT's or STD's per day).

- An average of 2,165 (808 ships at sea 67 percent of the time x 4 times per day) automatic surface meteorological parameter and SST recordings per day from ships by 1980, representing an average density of one daily reading per 215 x 215 mile grid by 1980.

- An <u>average</u> daily SXBT or STD density of one reading for every 796 x 796 miles grid from aircraft (157 readings per day) during the coming decade. When aircraft and ship readings are combined (157 + 1120), an average daily density of one reading per 286 x 286 mile grid results.

- Continuous ART and sea state recordings by aircraft of 16,000 track miles per day during the coming decade. This is equivalent to a coverage of thirteen 300 x 300 mile grids per day (periphery of the grids) which encompasses an area of one million square miles.

- The number of surface meteorological observations obtainable from the 10 aircraft (200 miles per hour, 8 hours run per day) could vary considerably. Assuming that observations are taken once every .5 hours (every 100 miles), the result will be 160 observations per day over an 8-hour period. ART data could be digitized at the minimum rate of one per 45-50 miles (one reading per 15 minutes, assuming 200-mile-per-hour aircraft).

All of the above densities can, of course, be increased substantially above the figures presented. The statistics given are based on averages when the total area of the Pacific and Atlantic Oceans and Mediterranean Sea is considered. Additional highlights of the data acquisition and transmission plan appear in Table IV-29.

A proposed implementation schedule for the TDP is shown in Table IV-30. It is recommended that the plan be jointly funded by the Navy and ESSA, with the Fleet Numerical Weather Central, Monterey, and National Meteorological Center as lead agencies, with responsibility for implementing the plan. A joint effort by the Navy and ESSA is recommended, since the data collected would benefit both organizations in their marine forecasting operations, although the data are probably of greater interest to the Navy because of the emphasis in the plan on the collection of SST and BT data. A recommended allocation of funding of the plan between the Navy and ESSA appears at the end of this section.

The TDP is based on the gradual installation in ships (naval and merchant) and aircraft over the coming decade of digital data recording and transmission equipment for sea surface temperature, BT, sea state and surface meteorological parameters. The initial steps in the plan are to equip additional naval and merchant ships with XBT and expendable STD (when available) launchers and analog recorders and to further the development of digital recorders for these data.

Development work would also be initiated to produce a digital recorder for shipboard and aircraft installation for recording wind speed and direction, air temperature, humidity and pressure. Paper tape would be used as the digital data output medium of the XBT, STD and surface meteorological parameter recorders in order that these data can be sent over existing shipboard radio teletype equipment. The paper tape would drive the RATT, rather than manual keying. Once the digital recorders are available, the preparation of BATHY

TABLE IV-29
SUMMARY OF FNWC (NAVAL WEATHER SERVICE LEAD AGENCY) AND NMC (ESSA LEAD AGENCY) PROPOSED IMPLEMENTATION SCHEDULE - MARINE DATA ACQUISITION, TRANSMISSION AND PROCESSING

	Fiscal Year		
	71	73	80
Naval ships equipped with SXBT or expendable STD launchers and analog recorders.	33		330
Merchant ships equipped with SXBT or expendable STD launchers and analog recorders.	50		500
Naval ships equipped with RATT paper tape transmission equipment and digital recorders for SST, SXBT or STD and surface meterological parameters.		38	304
Merchant ships equipped with RATT paper tape transmission equipment and digital recorders for SST, SXBT or STD and surface meterological parameters.		63	504
Aircraft equipped and in operation for ART, AXBT or STD, Sea State and surface meterological parameter data collection.	10		10
Aircraft equipped with RATT paper tape transmission equipment and digital recorders for ART, AXBT or STD, Sea State and surface meterological parameters.		10	10
Number of SXBT or expendable STD used for marine forecasting (2 records per ship per day).	41,000[a] (112 per day		310,000 (1120 per day)
Number of AXBT or expendable STD used for marine forecasting (16 records per aircraft per day).	59,000 (157 per day)		59,000 (157 per day)
Number of aircraft track miles per day.	16,000		16,000
Number and size of aircraft grid coverage.	13 (300x300 mi. grid)		13 (300x300 mi. grid)
Area encompassed by aircraft tracks per day.	1 million sq. miles		1 million sq. miles

[a]Does not include mechanical BTs.

TABLE IV-30

FNWC (NAVAL WEATHER SERVICE) AND NMC (ESSA LEAD AGENCY) PROPOSED IMPLEMENTATION SCHEDULE - MARINE DATA ACQUISITION, TRANSMISSION AND PROCESSING

	FISCAL YEAR									
	71	72	73	74	75	76	77	78	79	80
Increase use of aircraft for ART, AXBT or expendable STD, Sea State* and Surface Meterological Data Collection.	10 AC	10 AC	10 AC	10 AC	10 AC	10 AC	10 AC	10 AC	10 AC	10 AC
Develop capability for digitizing XBT aboard ship and AXBT aboard aircraft and transmitting via paper tape on RATT to shore stations and then by land cable to FNWC and NMC.										
Complete development of expendable STD with digital recording capability for ships and aircraft.										
Equip ships and aircraft with digital recorders and RATT paper tape attachments for transmitting SST, XBT, STD, Sea State and surface meterological parameters to shore.			10 AC 38 NS 63 MS	76 NS 126 MS	114 NS 189 MS	152 NS 252 MS	190 NS 315 MS	228 NS 378 MS	266 NS 441 MS	304 NS 504 MS
Develop capability for digitizing and transmitting via paper tape on RATT surface meterological parameters and SST aboard ship and aircraft. Develop capability for digitizing and transmitting Sea State data from aircraft. (For transmission on RATT to shore stations and then by land cable to FNWC and NMC.)										
Equip naval and merchant ships with XBT and STD launching and analog recording equipment.	33 NS 50 MS	66 NS 100 MS	100 NS 150 MS	133 NS 200 MS	166 NS 250 MS	200 NS 300 MS	233 NS 350 MS	266 NS 400 MS	300 NS 450 MS	300 NS 500 MS
Software development for collecting and processing digitized aircraft ART, AXBT or STD, Sea State and Surface Meterological Data.	8 MY	8 MY								
Software development for collecting and processing ship SXBT or STD, SST and Surface Meterological Data.	5 MY	5 MY								
Software maintenance.			3 MY	3 MY	3 MY	3 MY	3 MY			
Training programs for aircraft and shipboard personnel in use of recording and transmission equipment.			2 MY	2 MY	2 MY	2 MY	2 MY	2 MY	2 MY	2 MY

*Radar altimeter or scatterometer.
AC = aircraft
NS = naval ships
MS = merchant ship
MY = man year

messages and manual preparation of weather messages would be discontinued and digital data would be sent over RATT to shore, or into the Navy Environmental Data Network (NEDN) for data received from naval vessels, and then by land cable to FNWC, NMC, and to the applicable FWC's and ESSA Weather Bureau Offices. Paper tape could be generated at the shore stations for entry into the Weather Bureau teletype network and NEDN, or direct digital input to these networks could be employed by using appropriate data sets. Analog records would be produced currently with the digital recording and could be made available to users who prefer the analog format.

Other elements of the TDP are:

- software and hardware development programs for an expendable STD and digital recorders for SXBT, AXBT, STD, sea state and surface meteorological parameters.
- programs for training naval and merchant marine personnel in the operations of the data recording and transmission equipment.

The resources required in order to implement the ten-year TDP are shown in Table IV-31. Included are new equipment requirements and costs, hardware development programs and costs, new software personnel and costs and training program costs. The total ten-year cost of the TDP is $151.105 million, of which $149.460 million is required for hardware (aircraft operations and hardware installations on ships and aircraft). About 46 percent ($69 million) is for data collection by aircraft, and 54 percent ($82 million) is for data collection by ships. These figures demonstrate that any comprehensive plan for synoptic ocean surface data collection requires considerable funding.

Table IV-32 shows the proposed allocation of funding (new funds and existing budgets for marine observation and prediction) between the Navy and ESSA for implementing the TDP. This allocation is based on the following considerations:

TABLE IV-31
TECHNICAL DEVELOPMENT PLAN SPECIFICATION - MARINE DATA ACQUISITION, TRANSMISSION AND PROCESSING - FNWC (NAVAL WEATHER SERVICE LEAD AGENCY) AND NMC (ESSA LEAD AGENCY

FY	NEW EQUIPMENT REQUIREMENTS	NEW EQUIPMENT COSTS (MILLIONS)	NEW HARDWARE DEVELOPMENT PROGRAM	NUMBER OF ADDITIONAL ANALYSTS/ SOFTWARE PERSONNEL	OPERATOR TRAINING (MAN YEARS)	ADDITIONAL PERSONNEL COSTS (MILLIONS)	TOTAL ADDITIONAL ANNUAL BUDGET (MILLIONS)
71	(1) Employ 10 aircraft for ART, AXBT/ STD Sea State and surface meterological measurements on 300 mile grid.	$ 5.840[a]		8[e]		$ .120	$ 10.430
	(2) Use 59,000[b] AXBT or expendable STD units.	1.180					
	(3) Use 41,000 XBT or expendable STD units.	.820					
	(4) Install SXBT or expendable STD launching and recording equipment on 33 naval ships, 50 merchant ships.	1.760[d]					
	(5) Install AXBT or expendable STD launching and recording equipment on 10 aircraft.	.200[d]					
			(6) Development work for digitizing surface meterological and Sea State parameters (7 man years).			.210[f]	
			(7) Developmental work for digitizing SXBT and AXBT (5 man years).			.150[f]	
			(8) Developmental work for digitizing expendable STD (6 man years).			.150[f]	
72	(1)	5.840		8		.120	$ 11.050
	(2)	1.180					
	(4)	1.760					
	(9) Use 82,000 SXBT or expendable STD	1.640					
			(6)			.210	
			(7)			.150	
			(8)			.150	
73	(1)	5.840		3		.045	$ 13.525
	(2)	1.180			2[h]	.020	
	(4)	1.760					
	(10) Use 123,000 SXBT or expendable STD units.	2.460					
	(11) Install RATT paper tape equipment and digital recorders on 38 naval ships and digital recorders on 63 merchant ships.	2.020[h]					
	(12) Install RATT paper equipment and digital recorders on 10 aircraft.	[illegible]					
74	(1)	$ 5.840		3		.045	$ 14.145
	(12)	1.180			2	.020	
	(13) Use 164,000 SXBT or expendable STD units.	3.280					
	(4)	1.760					
	(11)	2.020					
75	(1)	5.840		3		.045	$ 14.965
	(2)	1.180			2	.020	
	(14) Use 205,000 SXBT or expendable STD units.	4.100					
	(4)	1.760					
	(11)	2.020					
76	(1)	5.840		3		.045	$ 15.785
	(2)	1.180			2	.020	
	(15) Use 246,000 SXBT or expendable STD units.	4.920					
	(4)	1.760					
	(11)	2.020					
77	(1)	5.840		3		.045	$ 16.605
	(2)	1.180			2	.020	
	(16) Use 287,000 SXBT or expendable STD units	5.740					
	(4)	1.760					
	(11)	2.020					
78	(1)	5.840			2	.020	$ 17.380
	(2)	1.180					
	(17) Use 328,000 SXBT or expendable STD units.	6.560					
	(4)	1.760					
	(11)	2.020					
79	(1)	5.840			2	.020	$ 18.200
	(2)	1.180					
	(18) Use 369,000 SXBT or expendable STD units.	7.380					
	(4)	1.760					
	(11)	2.020					
80	(1)	5.840			2	.020	$ 19.020
	(2)	1.180					
	(19) Use 410,000 SXBT or expendable STD units.	8.200					
	(4)	1.760					
	(11)	2.020					
	Ten Year Totals	$149.460				1.445	$151.105

NOTE: Numbers in parenthesis () are used to indicate repeated entries

[a] $1.00 per aircraft mile (1600 miles per day per aircraft) X 365 days X $1.00 X 10 aircraft = $5.84 million per year.

[b] 1 XBT every 100 miles = 16 per aircraft. 16 X 10 aircraft = 660 per day (59,000 per year).

[c] 2 XBT per day X 83 ships = 166 per day X 245 days per year at sea = 41,000 per year. $20.00 per launch.

[d] $20.00 per installation.

[e] $15,000 per man year.

[f] $30,000 per contract man year.

[g] $20,000 per installation.

[h] $10,000 per man year.

TABLE IV-32

RECOMMENDED ALLOCATION OF MARINE DATA[1] ACQUISITION, TRANSMISSION AND PROCESSING FUNDS BETWEEN NAVY AND ESSA

FY	NEW NAVY FUNDS[2] (MILLIONS)	ESTIMATED EXISTING NAVY BUDGET[3] (MILLIONS)	TOTAL ANNUAL NAVY BUDGET (MILLIONS)	NEW ESSA FUNDS[4] (MILLIONS)	ESTIMATED EXISTING ESSA BUDGET[3] (MILLIONS)	TOTAL ANNUAL ESSA BUDGET (MILLIONS)
71	$ 7.345	$ 12.075	$ 19.420	$ 3.085	$ 6.300	$ 9.385
72	7.[illegible]65	12.679	20.644	3.085	6.615	9.700
73	9.462	13.313	22.775	4.063	[illegible].946	11.009
74	10.182	13.979	24.161	3.963	7.293	11.256
75	11.002	14.678	25.680	3.963	7.658	11.621
76	11.822	15.412	27.234	3.963	8.041	12.004
77	12.642	16.183	28.825	3.963	8.443	12.406
78	13.440	16.992	30.432	3.940	8.865	12.805
79	14.260	17.842	32.102	3.940	9.308	13.248
80	15.080	18.734	33.814	3.940	9.773	13.713
	$113.200	$151.887	$265.087	$ 37.905	$ 79.242	$117.147

[1] Sea surface temperature, BT, sea state and surface meteorological parameters.

[2] One-half of aircraft operations, software development, digital recording and transmission and training costs plus 100 percent of SXBT, AXBT and STD costs.

[3] For marine observation and prediction, annual compound growth of 5 percent applied to FY 70 Navy budget $11.5 million and FY 70 ESSA budget of 6.0 million, The Third Report of the President to the Congress on Marine Resources and Engineering Development, January 1969, p. 209.

[4] One-half of aircraft operations, software development, digital recording and transmission and training costs.

- One-half of aircraft operations, software development, digital recording and transmission, and training, and 100 percent of SXBT, AXBT, and STD costs, allocated to the Navy.

- One-half of aircraft operations, software development, digital recording and transmission and training costs allocated to ESSA.

Also shown in Table IV-32 are the extrapolations of existing Navy and ESSA marine observations and prediction budgets for FY 71 to FY 80, using an annual 5 percent compound rate of budget growth. The extrapolated existing budget is added to the recommended new funds to obtain the total funding required for each of 10 years and for the decade for marine data[1] the acquisition, transmission and processing. Ten-year Navy funds are:

New funds	$131.200
Existing budget	151.887
Total	$265.087 million

Ten-year ESSA funds are:

New funds	$37.905
Existing budget	79.242
Total	$117.147 million

[1] SST, BT, sea state and surface meteorological data.

NATIONAL ENVIRONMENTAL SATELLITE CENTER (NESC)

A notable achievement of NESC is the measurement of the vertical temperature profile of the atmosphere achieved in the latest NIMBUS B Satellite with the Satellite Infrared Spectrometer (SIRS). Other experimental programs[1] include an improved model of SIRS which will measure the vertical humidity profile in addition to the vertical temperature profile; an infrared temperature profile radiometer designed to increase the probability of obtaining a sounding over partly cloudy areas; estimates of wave spectra and low level wind stress for low sea states based on sun glint patterns; sea surface temperature mappings; sea ice distribution by means of computer produced composite minimum brightness charts; and handdrawn ice/snow cover charts.

One of the challenges of satellite data collection and processing is the derivation of discrete data points from the mass of imagery data which will assist the user in interpreting the photographic or imagery product. To date, the major use of digital data from imagery sensors has involved the extraction and interpretation of data from the semiprocessed data which are used to produce the satellite products, e.g., digital cloud mosaics. Digital data is sometimes derived from an examination of satellite products. For example, 300 and 200 mb winds over the tropics are estimated from the appearance of cirrus clouds blowing off the tops of tropical thunderstorms. One method of providing digital data contours or data points on satellite imagery maps is to measure the parameters, such as sea surface temperature and sea state, from the satellite itself and to incorporate data points and contours on the imagery products by processing the acquired data.

---

[1] Satellite Activities of the Environmental Science Service Administration 1967, p. 6,7.

As already indicated, NESC has experimental programs underway for measuring these parameters. However, before these techniques become operational, it is possible that the utility of satellite products could be increased by incorporating digital data points and contours in the satellite product.[1] Developments in pattern recognition may make it possible to recognize the cloud patterns by computer and to automatically compute wind speed and direction and overlay this information on the cloud photographs. Another example of the use of digital data to graphically portray meteorological conditions is the use of computers to generate cloud cover presentations by employing different numeric digits on hard copy printouts.[2] The values of the digits are also used to indicate the amount of cloud cover. The utility of cloud photographs would be increased if cloud height and cloud motion information could be provided with the cloud photographs (preferably with the digital values imbedded in the photograph). Cloud motion information can be used to estimate wind speed and direction. Infrared mappings of sea surface temperature could be enhanced by imbedding digital values and contours of sea surface temperature in the maps. Another example is the superposition of pressure height contours, mean air temperature contours and wind speed and direction on satellite photographs. This technique is equivalent to overlaying weather map information on cloud photographs as an aid to interpreting the satellite photographs and for the purpose of correlating a number of meteorological parameters on a hemispheric and global basis. The value of this presentation would be limited if cloud height information was not available. However, it may be possible to use radiosonde data for the determination of cloud height and thickness and the geographical location of the clouds, and to associate these data in time and geographical position with the cloud data appearing in the satellite photographs. This would be accomplished by geographically correlating and merging the cloud

---

[1] It should be mentioned that many scientists do not want the satellite photographs to contain digital data since important features may be obscured by doing so. Some scientists object to the incorporation of latitude and longitude lines on cloud photographs.

[2] C. L. Bristor, W. M. Callicott and R. E. Bradford, "Operational Processing of Satellite Cloud Pictures by Computer," Monthly Weather Review, Vol. 94, No. 8, August 1966, pp. 515-520.

height and thickness information from radiosonde observations at the time of rectifying the cloud video data from the satellite. The radiosonde data (air temperature, humidity and pressure) and rawinsonde data (wind speed and direction) would then be incorporated on the satellite photographs in the form of discrete data points (with altitude or pressure level given) or in the form of pressure or temperature contours. This type of operation would require the computer linking of NMC and NESC data bases in order to provide rapid access to the upper air data received at each synoptic time at NMC for the purpose of correlating these data with the data obtained from satellites. Since it would also be desirable to portray surface parameters, such as sea surface temperature and wave height data, on cloudless portions of satellite photographs, and to portray sea surface temperature values and contours on sea surface infrared mappings, it would also be necessary to provide on-line access from NESC to the surface observation data stored in NMC computers which are received at each synoptic time. This concept of operation suggests the use of large direct-access files which would be common to the NMC and NESC computer systems, thereby permitting each organization to have rapid access to the other organization's data.

Another application of the conventionally obtained data is to provide ground truth data for verifying the accuracy of newly developed satellite sensors. For example, SST data from marine surface observation files and air temperature data from upper air files could be used to verify infrared SST mappings and vertical temperature profiles of the atmosphere, respectively. Since SST data acquired aboard ship are not very accurate, it may be better to utilize the surface portion of BT data available from FNWC for this purpose. The various data files could also be used for the quality control of satellite data, once new sensor systems are operational. Resources are provided in the TDP for NESC to develop systems and software for the verification and quality control of satellite data.

One problem in producing the type of display described in the previous section is the cluttering of the presentation which may result from an excessive amount of information. It would be difficult to completely automate this type of display and produce a standard product because of the necessity of varying the presentations according to the geographic occurrence of weather systems, e.g., tropical cyclones. The production of these products could be best handled by employing graphic CRT's in conjunction with data bases containing wind, air temperature, pressure and sea surface temperature data. Displays of weather conditions would be created by a meteorologist retrieving and portraying data from on-line data bases under the control of a graphic CRT console equipped with a light pen. The light pen would be employed for commanding data displays and data editing. Function keys could be provided for commonly used routines, such as the display of isobars for a given pressure level. It is envisaged that computer graphics could be employed in three ways: (1) in meteorological and computer systems research, (2) in the production of meteorological products, and (3) in forecasting operations. It is evident that the combination of on-line data files and interactive CRT's offers significant potential for meteorological research as an adjunct to numerical weather prediction activities. In addition, it provides a vehicle for continued research in the development of computer methods for analyzing and traying weather data. The use of computer graphics in the production of weather products has been discussed. Lastly, it appears that the use of computer graphics and on-line analysis of computer-stored data could eventually play a significant role as an aid to meteorological forecasting in local Weather Bureau Offices. However, before implementation occurs at the local level, the techniques and products should be thoroughly tested and proven at facilities such as NESC.

One of the major problems in the management of satellite data is the storage, processing and retrieval of the information content of satellite photographs and imagery. This is a far different problem than that presented by the storage and retrieval of discrete values such as digitized water temperature

versus depth data. In the latter case, discrete digital values are associated and stored in distinct data fields. In the case of satellite imagery data, the information content is enormous and there are no discrete values which exist in a natural format. Much of the information content of these products can only be derived by human interpretation of the photograph or image. Individual data points are useless to the end user. Given this situation, no attempt should be made to archive the massive amount of raw data produced by satellites. Rather, methods should be developed for computer indexing satellite data products and storing information which describes the data content of the product, rather than storing the data. For example, descriptor files can be employed which would contain such information as type of product (digital cloud mosaic, cloud cover printout, etc.), satellite identification, sensor, geographical area covered, orbit, time, type of data obtained, angle of inclination, presence of corollary information (latitude and longitude grids).

It is recommended that the descriptor magnetic tapes be produced by NESC and that copies of the tapes and instructions for their use be sent to NWRC and that NESC continue to send the corresponding satellite products to NWRC for archiving. It is also recommended that copies of future satellite products which contain sea surface temperature, sea state, ocean currents, or other sea surface measurements and index tapes also be sent to NODC for archiving. For the reason cited earlier, it is recommended that neither NODC nor NWRC archive the raw satellite data. By employing computer search of descriptor tapes, both NODC and NWRC will be equipped to ascertain the availability of requested data and products in the archives, and thus avoid the time-consuming examination of the actual photographs. Systems and programming resources for the production of the descriptor file system and tapes at NESC are included in the TDP.

NESC is also utilizing satellite data on an experimental basis for the production of climatological products. Data derived from daily cloud photographs--brightness and cloud cover and eventually the altitude of cloud tops--when

compiled and summarized over a period of time, become another source of climatological information. In the future, long term summarization of sea surface temperature mappings and vertical temperature profiles of the atmosphere will also qualify as climatological information. These data should become a part of the NWRC files to be used in answering requests from the public.

Resources are included in the TDP for NESC to develop climatological products from satellite data.

A concern of NESC is the effect on computer workload as greater resolution is obtained in the data acquired by satellites. Although the resolution of acquired data has an effect on computer storage requirements because of an increased number of data points, this problem can be resolved by segmenting the received data by geographic areas and performing the digitization and rectification in geographic sectors, i.e., the computer is not required to store on-line all the data corresponding to the coverage of the earth. However, the amount of computation time required with increased resolution could exceed the computational capacity of the planned dedicated CDC equipment (CDC 6600 with 6613 main frame). If it is assumed that computing facilities are currently being used four hours per day for processing high resolution global image data,[1] a doubling of the resolution would result in a quadrupling of the amount of data received and an increase by a factor of four in computer time required. Therefore, the acquisition, several years hence, of another computer with greater capacity is included in the TDP.

A proposed schedule for implementing the activities which have been discussed appears in Table IV-33. The resources required in order to implement the TDP

---

[1] C. L. Bristor, (NESC), Satellite Data Collection, November 14-16, 1966.

TABLE IV-33

NATIONAL ENVIRONMENTAL SATELLITE CENTER (NESC)
PROPOSED IMPLEMENTATION SCHEDULE - PRIORITY PRODUCTS AND DATA

	FISCAL YEAR									
	71	72	73	74	75	76	77	78	79	80
CONDUCT SYSTEMS STUDY FOR COMBINED USE OF METEOROLOGICAL AND SATELLITE DATA	4MY									
DEVELOP SOFTWARE FOR PRODUCING PRODUCTS WHICH COMBINE METEOROLOGICAL PARAMETERS WITH SATELLITE PRODUCTS	5MY	5MY								
MAKE SYSTEM STUDY FOR LINKING OF NESC AND NMC DATA FILES AND COMPUTER SYSTEMS	4MY									
PROVIDE NESC COMPUTER HARDWARE LINKAGES TO NMC COMPUTER DATA FILES		3MY								
DEVELOP SATELLITE DATA PRODUCT DESCRIPTOR SYSTEM AND DESCRIPTOR TAPES	3MY									
DEVELOP COMPUTER GRAPHICS SOFTWARE FOR ON-LINE PORTRAYALS OF WEATHER CONDITIONS			6MY	6MY	6MY					
ACQUIRE 2 COMPUTER GRAPHICS TERMINALS										
DEVELOP SOFTWARE FOR THE PRODUCTION OF SATELLITE DATA CLIMATOLOGICAL PRODUCTS					3MY	3MY				
DEVELOP SYSTEMS AND SOFTWARE FOR THE VERIFICATION AND QUALITY CONTROL OF SATELLITE DATA (SST, SEA STATE, AIR TEMPERATURE, ETC.)		4MY	4MY							
CONDUCT STUDY FOR THE ACQUISITION OF NEW COMPUTER				4MY						
ACQUIRE ANOTHER COMPUTER WHEN CAPACITY OF PLANNED COMPUTER IS EXCEEDED										
SOFTWARE MAINTENANCE		1MY	2MY	3MY	7MY	7MY	7MY	6MY	3MY	1MY

NOTE: MY = MAN YEARS

are shown in Table IV-34. This table shows new equipment and costs, new meteorological and analyst/software personnel requirements, and costs and an extrapolation of the estimated marine portion of NESC costs. It is estimated that the marine portion of the NESC annual cost of operation is approximately $250,000. A ten-year extrapolation of this amount is obtained by applying an annual five percent rate of growth. The extrapolated present marine data management cost plus the new funds requirements equals the total funding required to implement the TDP. The total ten-year budget is $6.919 million; $3,605 million of this is for new equipment and additional personnel.

TABLE IV-34
TECHNICAL DEVELOPMENT PLAN SPECIFICATION - NATIONAL ENVIRONMENTAL SATELLITE CENTER
MARINE DATA AND PRODUCTS

FY	NEW EQUIPMENT REQUIREMENTS	NEW EQUIPMENT COSTS (MILLIONS)	NUMBER OF ADDITIONAL DISCIPLINE PERSONNEL[1]	NUMBER OF ADDITIONAL ANALYSTS/ SOFTWARE PERSONNEL[2]	ADDITIONAL PERSONNEL COSTS (MILLIONS)	ESTIMATED NESC MARINE BUDGET[3] (MILLIONS)	TOTAL ANNUAL BUDGET (MILLIONS)
71			3	13	$.240	$.263	$.503
72			4	15	.285	.276	.561
73			2	10	.180	.290	.470
74			2	11	.195	.305	.500
75	2 GRAPHIC CRT TERMINALS	.150	1	9	.150	.320	.620
76	NEW COMPUTER SYSTEM	2.000 (MARINE DATA PORTION)[4]	1	9	.150	.336	2.486
77				7	.105	.353	.458
78				6	.090	.371	.461
79				3	.045	.390	.435
80				1	.015	.410	.425
	TEN YEAR TOTALS				$1.455	$3.314	$6.919

1 For systems work related to computer applications; priced A $15,000 per man year.

2 Priced at $15,000 per man year.

3 Estimate of current annual NESC marine data costs is $250,000. Annual compound five percent budget growth is applied to this amount.

4 One million byte high speed memory (750 nanosecond cycle time), bulk core storage of four million bytes, disk files storing 500 millions decimal digits on-line, 10 magnetic tape drives, 2 tape control units, 3 IO channels (one for connection to NMC computer, card reader/punch, paper tape reader/punch printer, 6 graphic CRT terminals. Cost = $4.000; 50 percent allocated to marine data and products.

FISHERIES

BUREAU OF COMMERCIAL FISHERIES (BCF) AND BUREAU OF SPORT FISHERIES AND WILDLIFE (BSF&W)

This study has revealed that major problems exist with respect to the collection, processing and reporting of fishery statistics. These problems are:

- Inadequate funding and data processing equipment in the BCF Branch of Statistics.
- Difficulties in obtaining data from States and commercial fishermen.
- Inconsistencies in data formats.
- Lack of personnel, equipment and processing procedures in the field for collecting and disseminating statistics.

There are two aspects of fishery statistics: regional and national.

1. Reporting of daily and weekly statistics is provided within a region by BCF Marketing and News Offices.

2. Compilation and reporting of national statistics on an annual basis is provided by the BCF Branch of Statistics, Washington, D.C.

Since there are problems peculiar to each fishery and region, it is recommended that a highly decentralized fishery statistics data collection and data dissemination network be provided. A description of one segment of this network will serve to illustrate the concept. Eight BCF locations would be designated as the primary receiving and dissemination points for fishery statistics, pre-season abundance forecasts, fishery products reports and fishery advisories. These are the first eight locations listed in Table IV-35.

TABLE IV-35

PROPOSED SCHEDULE OF IMPLEMENTATION OF DATA ACQUISITION COMMUNICATION AND PROCESSING FOR IMPROVED FISHERY PRODUCTS - BUREAU OF COMMERCIAL FISHERIES (BCF) AND BUREAU OF SPORT FISHERIES AND WILDLIFE (BSF&W)

BCF PRIORITY PRODUCTS: FISHERY ADVISORY (A), ABUNDANCE FORECAST (F), FISHERY PRODUCT REPORT (P), FISHERY RESOURCE ATLAS (R), FISHERY STATISTICS REPORT (S)

BSF&W PRIORITY PRODUCTS: SPORT FISHING ATLAS (SA), FISHERY STATISTICS REPORT (S)

BCF LOCATION	FISHERY	PROPOSED TYPE OF PRIORITY PRODUCT	IMPLEMENTATION DATE FOR AUTOMATIC DATA PROCESSING SYSTEM (FISCAL YEAR)	IMPLEMENTATION DATE FOR REMOTE TERMINAL (FISCAL YEAR)	REMOTE TERMINAL CONNECTED TO
LA JOLLA	WEST COAST TUNA	A F P S	1972	1973	WASHINGTON,D.C.[1]
SEATTLE	NORTHEASTERN PACIFIC SALMON	A F P S R	1973	1974	WASHINGTON,D.C.
GALVESTON	GULF OF MEXICO SHRIMP	A F P S	1972	1973	WASHINGTON,D.C.
BEAUFORT	ATLANTIC AND GULF MENHADEN	A F P S	1973	1974	WASHINGTON,D.C.
WOODS HOLE	NEW ENGLAND GROUNDFISH	A F P S	1973	1974	WASHINGTON,D.C.
ANN ARBOR	GREAT LAKES ALEWIFE	A F P S R	1975	1976	WASHINGTON,D.C.
AUKE BAY	KING CRAB SALMON	A F P S	1973	--	--
HONOLULU	TUNA	A F P S	1974	--	--
TERMINAL ISLAND	--	P S	--	1974	BCF - LA JOLLA
PASCAGOULA	--	P S R	--	1974	BCF - GALVESTON
ST. PETERSBURG	--	P S	--	1974	BCF - GALVESTON
MIAMI	--	P S R	--	1974 1975	BCF - GALVESTON BCF - BEAUFORT
NEW YORK	--	P S	--	1975	BCF - WOODS HOLE
GLOUCESTER	--	P S R	--	1975	BCF - WOODS HOLE
BOOTHBAY HARBOR	--	P S	--	1975	BCF - WOODS HOLE
CHICAGO	--	P S	--	1977	BCF - ANN ARBOR
BRANCH OF STATISTICS WASHINGTON, D.C D.C.	--	ANNUAL FISHERY STATISTICS REPORT	1972[1]	--	--
BSF&W LOCATION					
SANDY HOOK	--	SA, S		1975	BCF - WOODS HOLE
PANAMA CITY	--	SA, S		1974	BCF - GALVESTON
TIBURON	--	SA, S		1974	BCF - LA JOLLA
WASHINGTON, D.C.	--	ANNUAL FISHERY STATISTICS REPORT[2]	1972[1]	--	--

1 U.S.G.S. 360/65 computer 2 Synthesize sport/commercial fishing statistics.

A major fishery is associated with each of the eight primary locations. Each of the eight primary locations would be linked by telephone line for the communication of digital data to and from other field locations. For example, La Jolla would be linked with Terminal Island and Galveston would be linked with Pascagoula, St. Petersburg and Miami. Each satellite facility would collect and disseminate fishery statistics within its area. The processing for each region would be performed at the primary location, e.g., La Jolla. Summary statistics and computations would be transmitted over telephone lines to the terminals at satellite locations for ultimate distribution to area processors, distributors, fishermen, universities and laboratories. Primary locations would be the contact with States for collecting their fish catch data and for distributing statistical summaries to the States.

Each primary location (except Honolulu and Auke Bay, because of prohibitive line charges) is also linked to the USGS computer (360/65) in Washington for the purpose of communicating fishery statistics and for retrieving data from the Branch of Statistics bases. The Branch of Statistics would compile and produce national fishery statistics reports on an annual or more frequent basis.

In addition to statistical information services, the primary locations would provide fishery advisory services and pre-season abundance forecasts. The acceleration of these efforts is highly dependent on the research required to develop relationships between fish migration and behavior with environmental and biological factors. This study is addressed to providing the data processing resources necessary for collecting, storing and analyzing environmental and catch data which could be employed in making forecasts, once the feasibility and reliability of forecasts is demonstrated. The data processing systems at each primary location would be utilized for the preparation of forecasts.

The network also includes the BSF&W facilities at Sandy Hook, Panama City and Tiburon. These facilities would be linked for the transmission of digital data

to the BCF facilities at Woods Hole, Galveston and La Jolla, respectively.

The BSF&W facilities would collect and disseminate sport fishery statistics for their areas of responsibility. The three affiliated BCF facilities would process the data and return summary information to the BSF&W locations for distribution to commercial interests, universities, States, resource managers, etc. The BSF&W in Washington, D.C., would also have access to the USGS 360/65 in order to receive the sport fisheries statistics transmitted by BCF Woods Hole, Galveston and La Jolla and compile and process sport fishery statistics on a national basis. The national sport fishery statistics would be integrated with the national commercial fishery statistics and published as single annual (or more frequent) report. This would be a joint effort between the BCF Branch of Statistics and BSF&W, Washington.

The plan also contemplates the publication of fishery resource atlases by BCF Exploratory Fishery Bases and the publication of sport fishery atlases by the at BSF&W field locations.

The benefits provided by this system are:

- Rapid collection and dissemination of data within a region and for a given fishery.
- Integration of fishery data on a national basis by providing linkages among facilities.
- Integration of commercial and sportfishing data.
- Customization of the fishery services to meet the needs of each region, while permitting data to be collected, processed and disseminated on a national basis.

Equipment requirements (computers, communication terminals, data sets and communication lines) for the network are shown in Table IV-36. The cost of this equipment is summarized in Table IV-37.

TABLE IV-36

EQUIPMENT REQUIREMENTS - BUREAU OF COMMERCIAL FISHERIES AND BUREAU OF SPORT FISHERIES AND WILDLIFE - PRIORITY DATA AND PRODUCTS

BCF LOCATION	COMPUTER		COMMUNICATIONS TERMINAL		DATA SET		COMMUNICATION LINES		FISCAL YEAR INSTALLED
	NUMBER	COST (THOUSANDS)	NUMBER	ANNUAL CHARGE (THOUSANDS)	NUMBER	ANNUAL CHARGE (THOUSANDS)	MILES (THOUSANDS)	ANNUAL CHARGE (THOUSANDS)	
LA JOLLA	1	$290.5[a]							72
			1	$3.1	2	$5.86	3	$30	73
SEATTLE	1	290.5[a]							73
			1	3.1		5.86	3	30	74
GALVESTON	1	290.5[a]							72
			1	3.1	2	5.86	2	20	73
BEAUFORT	1	290.5[a]							73
			1	3.1	2	5.86	1	10	74
WOODS HOLE	1	290.5[a]							73
			1	3.1	2	5.86	.5	5	74
ANN ARBOR	1	290.5[a]							75
			1	3.1	2	5.86	1.5	15	76
AUKE BAY	1	241.5[a]							73
HONOLULU	1	241.5[a]							74
TERMINAL ISLAND			1	3.1	2	5.86	.2	2	74
PASCAGOULA			1	3.1	2	5.86	.5	5	74
ST. PETERSBURG			1	3.1	2	5.86	1	10	74
MIAMI			1	3.1	2	5.86	1	10	74
					2	5.86	.5	5	75
NEW YORK			1	3.1	2	5.86	.5	5	75
GLOUCESTER			1	3.1	2	5.86	.1	1	75
BOOTHBAY HARBOR			1	3.1	2	5.86	.5	5	75
CHICAGO			1	3.1	2	5.86	.5	5	77
BRANCH OF STATISTICS (WASHINGTON, D.C.)	USGS 360/65 (1 HOUR/DAY)	100 (ANNUAL CHARGE)							72
BSF&W LOCATION									
SANDY HOOK			1	3.1	2	5.86	.5	5	75
PANAMA CITY			1	3.1	2	5.86	1	10	74
TIBURON			1	3.1	2	5.86	.5	5	74
WASHINGTON, D.C.	USGS 360/65 (.5 HOUR/DAY)	50 (ANNUAL CHARGE)							72
TOTALS	8		17		34		17.8		

a Purchase: 65K byte processor, two 8 million byte disc drives, 1 disc control, 4 magnetic tape units and control, 1 card reader/punch, 1 printer, 1 keyboard terminal, 1 data adaptor, 1 transmission control (La Jolla, Seattle, Galveston, Beaufort, Woods Hole, Ann Arbor).

TABLE IV-37
EQUIPMENT COST SUMMARY - BUREAU OF COMMERCIAL FISHERIES AND BUREAU OF SPORT FISHERIES AND WILDLIFE - PRIORITY DATA AND PRODUCTS

FISCAL YEAR	COMPUTER		COMMUNICATIONS TERMINAL		DATA SET		COMMUNICATION LINES		TOTAL ANNUAL COST (THOUSANDS - ROUNDED)
	NUMBER	ANNUAL COST (THOUSANDS)	NUMBER	ANNUAL COST (THOUSANDS)	NUMBER	ANNUAL COST (THOUSANDS)	MILES	ANNUAL COST (THOUSANDS)	
72	2	$731[a]							$731
73	4	1,263	2	$6.2[b]	4	$11.72[c]	5	$50[c]	1,331
74	1	382	9	27.9	18	64.46	8.7	137	622
75	1	441	4	12.4	8	93.76	2.1	158	705
76		150	1	3.1	2	99.62	1.5	173	426
77		150	1	3.1	2	105.48	.5	178	437
78		150				105.48		178	433
79		150				105.48		178	433
80		150				105.48		178	434
TOTALS	8	$3.577	17	$53 (ROUNDED)	34	$692 (ROUNDED)	17.8	$1,230	$5,552

a Purchase of field location computers plus $150K per year charge for use of USGS 360/65.

b Purchase.

c Annual charges.

The ten-year cost of data processing equipment for the entire network is $5,552,000. The complete TDP, including hardware, software, computer operations and applications personnel, is shown in Tables IV-38 and IV-39. The ten-year cost of data processing (equipment, software and operations) for the network is $12,251,000. Applications personnel consist of statistical analysis, data collection and liaison personnel; these are shown in Table IV-39. Applications personnel costs for the decade are $51,945,000. The total ten-year cost (data processing plus applications personnel) is $64,196,000.

TABLE IV-38

TECHNICAL DEVELOPMENT PLAN SPECIFICATION - BUREAU OF COMMERCIAL FISHERIES AND BUREAU OF SPORT FISHERIES AND WILDLIFE - PRIORITY PRODUCTS AND DATA - NEW HARDWARE, SOFTWARE AND COMPUTER OPERATIONS REQUIREMENTS

FY	ACTIVITY*	HARDWARE REQUIREMENTS	HARDWARE COSTS (MILLIONS)	SOFTWARE DEVELOPMENT REQUIREMENTS	SOFTWARE(1) MAINTENANCE REQUIREMENTS	SOFTWARE PERSONNEL	SOFTWARE PERSONNEL COSTS(2) (MILLIONS)	COMPUTER OPERATIONS PERSONNEL	COMPUTER OPERATIONS PERSONNEL COSTS(3) (MILLIONS)	TOTAL ANNUAL DATA PROCESSING COST(4) (MILLIONS)
71	(1) AUGMENT BCF & BSF&W CAPABILITIES FOR PROVIDING FISHERY PRIORITY PRODUCTS & SERVICES			(1) DEVELOP AT BCF BRANCH OF STATISTICS AND BSF&W COMMON PROGRAMS FOR IMPROVED FISHERY STATISTICS REPORTING FOR USE AT FIELD LOCATIONS (20K INSTRUCTIONS) (2) DEVELOP FISHERY STATISTICS DATA BASES AT 8 FIELD LOCATIONS (BCF) AND 3 FIELD LOCATIONS (BSF&W) (55K INSTRUCTIONS)		15	$.225			$.225
72	(1) INSTALL DATA PROCESSING SYSTEMS AT BCF FIELD LOCATIONS BEGIN BCF BRANCH OF STATISTICS AND BSF&W OPERATIONAL USE OF USGS 360/65	(1) 2 PROCESSORS AND ASSOCIATED EQUIPMENT	$.731	(1) (2) (3) DEVELOP SOFTWARE FOR ADVISORIES & ABUNDANCE FORECASTS* AT 8 BCF FIELD LOCATIONS (80K INSTRUCTIONS) (4) DEVELOP AT BCF BRANCH OF STATISTICS COMMON SOFTWARE FOR FISHERY PRODUCTS REPORTS FOR USE BY FIELD LOCATIONS (15K INSTRUCTIONS)	(1)	23	.345	10	$.100	1.176
73	(1) INSTALL DATA PROCESSING SYSTEMS & TERMINALS AT BCF FIELD LOCATIONS. PROVIDE FOR DATA COMMUNICATION BETWEEN BCF FIELD LOCATIONS & USGS 360/65	4 PROCESSORS AND ASSOCIATED EQUIPMENT 2 TERMINALS AND CHARGES FOR 4 DATA SETS & 5K MILES OF TELEPHONE LINE	1.331	(3) (4) (5) DEVELOP AT BCF BRANCH OF STATISTICS AND BSF&W SOFTWARE FOR ANNUAL STATISTICS REPORT (20K INSTRUCTIONS) (6) DEVELOP AT 8 BCF FIELD LOCATIONS SOFTWARE FOR FISHERY RESOURCE ATLASES (20K INSTRUCTIONS)	(1) (2)	23	.345	32	.320	1.996

*Initiation of improved product/service or new product/service.

*Fishery Advisories and Abundance Forecasts (as reassearch proves the feasibiltiy of improved advisories and forecasts), Fishery Products Fishery Statistics Reprot, Fishery Resource Atlas, Sport Fishing Atlas.

1. Numbers indicate programs for which maintenance is required.
2. Priced at $15,000 per annum per man year.
3. Priced at $10,000 per annum per man year.
4. Hardware cost and software personnel cost and computer operations cost.

NOTE: Numbers in parenthesis associate related items, e.g., hardware is required in FY 72 for BUF field installations, software development is required in FY 71 and FY 72 for field installations.

TABLE IV-38 (CONT'D)
TECHNICAL DEVELOPMENT PLAN SPECIFICATION - BUREAU OF COMMERCIAL FISHERIES AND BUREAU OF SPORT FISHERIES AND WILDLIFE - PRIORITY PRODUCTS AND DATA - NEW HARDWARE, SOFTWARE AND COMPUTER OPERATIONS REQUIREMENTS

FY	ACTIVITY*	HARDWARE REQUIREMENTS	HARDWARE COSTS (MILLIONS)	SOFTWARE DEVELOPMENT REQUIREMENTS	SOFTWARE MAINTENANCE REQUIREMENTS	SOFTWARE PERSONNEL	SOFTWARE PERSONNEL COSTS (MILLIONS)	COMPUTER OPERATIONS PERSONNEL	COMPUTER OPERATIONS PERSONNEL COSTS (MILLIONS)	TOTAL ANNUAL DATA PROCESSING COST (MILLIONS)
[illegible]	[illegible]	[illegible]	[illegible]	[illegible]	(1) (2) (4)	28	.420	46	.460	1.502
[illegible]	[illegible]	[illegible]	[illegible]	(3) [illegible]	[illegible] (6)	20	.300	55	.550	1.555
[illegible]	[illegible]	[illegible]	[illegible]	[illegible]	[illegible]	14	.210	56	.560	1.196
[illegible]	[illegible]	[illegible]	[illegible]	(3)	[illegible] (6)	13	.195	57	.570	1.202
[illegible]		[illegible]	.433	(3)	(4) (5) (6) (7)	10	.150	57	.570	1.153
[illegible]		[illegible]	.433	(3)	(5) (6) (7)	9	.135	57	.570	1.138
[illegible]		[illegible]	.433	(3)	(7)	7	.105	57	.570	1.108
TEN YEAR TOTALS (MILLIONS)			$5.551				$2.430		$4.270	$12.251

* Initiation of improved product/service of new product/service

TABLE IV-39
TECHNICAL DEVELOPMENT PLAN SPECIFICATION -
BUREAU OF COMMERCIAL FISHERIES AND BUREAU OF SPORT FISHERIES
AND WILDLIFE - APPLICATIONS PERSONNEL[a] - PRIORITY PRODUCTS AND DATA

FY	BCF FIELD LOCATIONS	BSF&W FIELD LOCATIONS	BCF BRANCH OF STATISTICS	BSF&W WASH., D.C.	TOTAL APPLICATIONS PERSONNEL	TOTAL APPLICATIONS PERSONNEL COST (MILLIONS)	TOTAL ANNUAL BUDGET (MILLIONS)
71	120[b]	30[c]	100[d]	25[d]	275	$4.125	$4.350[e]
72	126	32	105	26	289	4.335	5.511
73	132	34	110	27	303	4.545	6.541
74	139	36	116	28	319	4.785	6.287
75	146	38	122	29	335	5.025	6.580
76	153	40	128	30	351	5.265	6.461
77	161	42	134	32	369	5.535	6.737
78	169	44	141	34	388	5.820	6.973
79	177	46	148	36	407	6.105	7.243
80	186	48	155	38	427	6.405	7.513
TEN YEAR TOTALS						$51.945	$64.196

[a]Statistical, data collection and processing and user liaison personnel. Personnel requirements do no necessarily correspond to present staffing. Numbers of personnel are the estimated requirements for implementing the proposed program.

[b]10 each for La Jolla, Seattle, Galveston, Beaufort, Woods Hole, Ann Arober, Auke Bay, and Honolulu; 5 each for Terminal Island, Pascagoula, St. Petersburg, Miami, New York, Gloucester, Boothbay Harbor, and Chicago (new personnel requirements).

[c]10 each for Sandy Hook, Panama City, and Tiburon (new personnel requirements)

[d]Future personnel requirements for existing organization components.

[e]Data processing and applications personnel costs.

FEDERAL WATER POLLUTION CONTROL ADMINISTRATION (FWPCA)

The development of the STORET system for the storage and retrieval of water quality and water and waste facilities data represents a significant step forward in the realization of a national water quality information system STORET I is designed for the storage and retrieval of data from rivers and employs a river mileage-index method of identifying sampling point locations. STORET II is designed for the storage and retrieval of data for coastal waters, lakes and estuaries and employs latitude and longitude sampling point location and a sophisticated method of retrieval by polygonal areas. The STORET system contains water quality data and, in many instances, flow data for over 15,000 stations which have been operated for one year or more. At least 3,500 station records include flow data and/or quality data collected by the U.S. Geological Survey.[1] About 20 percent of the data stored in STORET thus far is marine data.

The utility of this system for marine data is governed largely by our ability to establish water quality standards which can be employed as reliable indicators of the presence of pollution when the standards are exceeded. In addition, the standards must have such high statistical confidence that legal challenges by waste dischargers can be withstood. A major problem in establishing standards is the difficulty in selecting a set of environmental parameters for measurement which will be valid indicators of the existence of pollution. Secondly, the frequency and duration of sampling, precision of recording, and density and geographical distribution of sensors must be ascertained in order to establish the statistical integrity of the measurement. Once the data collection requirements have been established, the data

---

[1] James H. McDermott, "Water Quality Surveillance in Water Resource Development and Control," prepared for Pan American Health Organization, Water Quality Control Laboratory Symposium, Rio de Janeiro, Brazil, September 30-October 4, 1968.

must be obtained. This has proven difficult due to incomplete knowledge concerning the types of parameters which should be measured and the sampling design which should be employed. The problem is complicated by a highly decentralized system of water quality control in the States and municipalities, each with its own philosophy regarding water quality criteria and pollution control measures. Until these problems are resolved, the usefulness of a water quality information system will be limited. However, it is still important to proceed with the building of a national water quality data base, as the FWPCA has done, in parallel with the research which is necessary to better define the criteria for water quality and the associated data requirements. Since future data requirements are difficult to predict, both in terms of the data to be stored and the questions which will be asked of the information system, it is important to provide great flexibility in the methods utilized for storage and retrieval of data. The system should be easy to use and should not require the user to either store or retrieve data in rigid computer-oriented formats. The system should also be capable of remote inquiry by a large number of geographically dispersed users. Users should not have to employ complicated data coding forms and mail them to a computer center in Washington, D.C., in order to store or retrieve data. Although numeric coding of data is highly desirable within the computer system in order to achieve economies in storage space and file processing time, free-form formats should be employed for user requests and data submissions. The retrieval language and format for data input should be as natural and as computer-independent as the state of the art of information processing technology will permit. It is recommended that this be achieved in a two-step approach of, first, using COBOL or PL1 in STORET as an interim language and compiler for information requests and file management and retrieval system[1] and, later, using a generalized information storage and retrieval system.

---

[1] PL1 was used to convert H400 programs to IBM 360/65, but apparently is not being used as language and compiler for retrieval and file management statements.

Although neither COBOL nor PL1 is ideally suited to information retrieval, both possess free-form input and logic features which would avoid rigid input structures. With this type of system, the user would not have to be concerned with parameter code numbers, formats of control cards, sequence of control cards, or other detailed information required by the computer but of no interest to the user. A generalized type of retrieval language is mandatory for the operation of the remote inquiry terminals which will ultimately become a part of the STORET system. The cost of providing this flexibility is the cost of resources required for implementing a generalized information storage and retrieval (IS&R) system. This cost is difficult to estimate at the present time due to the uncertainty concerning the plans of computer manufacturers to provide information storage and retrieval systems and languages. These systems have not been standardized as COBOL and FORTRAN have been. Many generalized information systems, of varying capabilities, exist. Three examples are: IBM Generalized Information System (GIS), Informatics MARK IV, and System Development Corporation Time-Shared Data Management System. The first two are primarily file processors and report generators and do not possess sophisticated retrieval capabilities. The third system is a data management system with highly sophisticated retrieval capabilities. It is available on the IBM 360/50 and 67 in both time-sharing and batch modes.

The proposed schedule of implementation, Table IV-40, provides for activities associated with the use of an interim storage and retrieval system while the long-range systems are evaluated and one is selected for implementation. The TDP provides for the training of STORET users in the field in the use of the proposed interim and long-range IS&R systems. The TDP also recommends the creation of a permanent field liaison function for the purpose of assisting the States and municipalities in the collection of additional data for STORET. In addition, the liaison personnel would be available in the field to provide assistance in the use of STORET.

TABLE IV-40

FEDERAL WATER POLLUTION CONTROL ADMINISTRATION
PROPOSED IMPLEMENTATION SCHEDULE - PRIORITY PRODUCTS AND DATA

	FISCAL YEAR									
	71	72	73	74	75	76	77	78	79	80
CONDUCT STUDY FOR THE EVALUATION AND SELECTION OF GENERALIZED FILE MANAGEMENT AND RETRIEVAL SYSTEMS. IDENTIFY COMPONENTS WHICH MUST BE SUPPLIED BY FWPCA										
DEVELOP COMPONENTS OF GENERALIZED FILE MANAGEMENT AND INFORMATION RETRIEVAL SYSTEM WHICH MUST BE SUPPLIED BY FWPCA										
USE COBOL OR PLI ON INTERIM BASIS AS A DATA RETRIEVAL LANGUAGE AND FILE PROCESSOR										
CONDUCT ORIENTATION SESSIONS FOR USERS IN THE USE OF RETRIEVAL LANGUAGE (FIRST, FORMATS FOR COBOL OR PLI; SECOND, FOMATS FOR GENERALIZED SYSTEM)										
PROVIDE FWPCA REGIONAL REPRESENTATIVES TO ASSIST THE STATES AND MUNICPALITIES IN DATA COLLECTION FOR STORET AND IN THE USE OF STORET										
GENERALIZED FILE MANAGEMENT AND RETRIEVAL SYSTEM BECOMES OPERATIONAL FOR BATCH PROCESSING										
CONDUCT SYSTEMS STUDY FOR THE DEVELOPMENT OF REMOTE INQUIRY OF FWPCA DATA BASES										
DEVELOP SOFTWARE FOR REMOTE INQUIRY OF FWPCA DATA BASES										
ACQUIRE EQUIPMENT FOR REMOTE INQUIRY OPERATION										
REMOTE INQUIRY SYSTEM BECOMES OPERATIONAL										
INSTALL SENSORS AND TELEMETERING EQUIPMENT IN SELECTED ESTUARIES AND COASTAL AREAS AND PROVIDE DATA COMMUNICATION TO FWPCA, WASHINGTON, D.C.										
DEVELOP SOFTWARE FOR TELEMETERING DATA FROM SENSORS IN SELECTED ESTUARIES AND COASTAL AREAS TO FWPCA, WASHINGTON, D.C.										
STORET SYSTEM GOES ON LINE WITH TELEMETERED INPUTS FROM SELECTED ESTUARIES										
INCORPORATE ECONOMIC DATA AND STATISTICS IN STORET SYSTEM (POPULATION, USES OF ESTUARIES AND COASTAL ZONE, ECONOMIC INDICATORS, ETC.)										
CONDUCT RESEARCH FOR THE DEVELOPMENT OF WATER QUALITY MODELS FOR PREDICTING THE OCCURRENCE AND EFFECTS OF POLLUTION AND FOR ANALYZING THE EFFECT OR POLLUTION ON THE NATURAL ENVIRONMENT AND ON THE ECONOMY OF AN AREA (WATER QUALITY FORECASTS)										
INCORPORATE MODELS IN STORET SYSTEM AS MODELS ARE DEVELOPED. USE STORET AS SOURCE OF INPUT DATA AND AS SOURCE OF DATA FOR MODEL VALIDATION										
DEVELOP CAPABILITY IN STORET FOR DETECTING CONDITIONS WHICH EXCEED WATER QUALITY STANDARDS										
INCORPORATE IN STORET INFORMATION ON INDUSTRIAL WASTE DISCHARGE AND OIL SPILLS (RATE OF DISCHARGE, RATE OF DISPERSION, GEOGRAPHICAL AREA AFFECTED, PROPERTY DAMAGE, ETC.)										
PERFORM ANALYSIS OF ENVIRONMENTAL PARAMETERS PRIOR TO AND AFTER WASTE DISCHARGE ACTIVITIES HAVE BEEN ESTABLISHED, AND BEFORE AND AFTER WASTE TREATMENT OPERATIONS HAVE BEEN ESTABLISHED AS AN AID IN POLLUTION PREDICTION AND CONTROL; INCORPORATE DATA IN MODELS AND STORET										

Two modes of STORET operation are envisaged which involve the use of remote facilities. One is the remote retrieval and submission of data by users in the various States and municipalities. The primary need for this type of operation is to provide researchers and water quality officials with direct access to STORET data bases. The value to the researcher is for experimentation in discovering relationships between changes in the environment and the introduction of pollutants. The administrator can use the system as a vehicle for training exercises in pollution monitoring and control or in actual decision situations if data of sufficient quantity and quality are available. Also, it is recommended that FWPCA establish the remote inquiry mode of operation as an experimental system to test the feasibility of this method of operation prior to the implementation of similar systems in the States.

The second type of remote operation is one in which data would be telemetered from sensors located in selected estuaries around the nation to the Department of the Interior computer center (operated by USGS) in Washington, D.C. The primary purpose of this system would be to test the feasibility of the remote acquisition and transmission of water quality data to central storage and processing facilities and the use of these data for continuous monitoring, prediction, and control functions. This system could be gradually augmented in the future to become the vehicle for water quality monitoring, prediction, and control in interstate waters and could provide a model for the development of similar systems by the States for intrastate waters. The use of a single system as a test bed for evaluating water quality data systems would result in substantial savings to the States. This system would also be employed as a training device during joint Federal-State workshop sessions.

FWPCA has installed computer terminals in its offices in Cincinnati, Ohio, Kansas City, Missouri, and Portland, Oregon, for linkage to the Washington, D.C., headquarters (Department of the Interior IBM 360/65 computer). A network to link all FWPCA offices and laboratories is under consideration.

In the absence of detailed information on FWPCA plans for remote terminal operation, it is proposed in the TDP that seven regional FWPCA offices be utilized for the remote entry and retrieval of STORET data. This corresponds to the number of major basins which border the nation's coastal and Great Lakes areas. It is also proposed that seven estuaries and/or coastal locations be instrumented, one in each of the seven basins, for the purposes mentioned previously. The seven offices would be paired with the seven estuaries in order that the continuous monitoring of a given estuary and the associated data transmission to headquarters can be integrated with the local use of STORET. Since requirements for the collection of water quality data are largely undefined at this time, only gross estimates of an instrumentation and telemetry system can be provided. Eight parameters, such as dissolved oxygen, pH, conductivity, temperature, dissolved chlorides, oxidation-reduction potential, turbidity, and total carbon are assumed to be recorded at each sampling station. Twenty sampling stations per estuary are assumed. If eight parameters (six characters per parameter) from 20 stations are sampled once per minute, 960 characters per minute would be transmitted on TWX or Data Phone facilities to Washington, D.C.

An important element of the TDP is the development of models for making water quality forecasts. These models should be integrated with the STORET system in order that STORET may serve as a source of input data for the models and also as a vehicle for model validation and adjustment (improvement of models as more data become available for checking model validity).

An important facet of water quality activity which has received relatively little attention is the use of economic data and analysis for water quality planning and control. These data consist of such items as the economic and social impact of pollution, water uses, population statistics, etc. A program for the collection and storage of these data in STORET should be

started. Much of these data exist in other files, e.g., city and county planning files and census files. These files need to be associated with the relevant water quality data in STORET.

The STORET system should be programmed to automatically detect conditions of water quality which are below standards. Of course, the standards must first be determined for various areas and stored in STORET. The automatic monitoring for below standard water quality can be performed in either the batch processing or on-line (future) mode of STORET operation. Also recommended for inclusion in STORET is additional information on industrial waste dischargers and oil spills and leaks (type of discharge, rate of discharge, rate of dispersion, geographical area affected, property damage, etc.). Programs should be developed for the analysis of environmental parameters before and after the inception of waste discharge activities in order to assess the damage done to the environment by pollutants. An analysis of environmental parameters should also be made before and after the inception of waste treatment operations in order to assess the value of waste treatment operations. The analysis programs and data would be incorporated in STORET.

The Technical Development Plan Specification is shown in Table IV-41. This plan shows the resources which are required over the next ten years in order to implement the improvements and additions to water quality data management which have been discussed. All resources are new resources except the column identified as "Estimated Existing FWPCA Marine Data Budget." The FY 71 amount for this item is estimated at $1.0 million. A compound five percent annual increase is applied to this amount in order to obtain an estimate of the "normal budget" which would be in effect <u>without</u> the addition of the TDP. To this amount are added new resources required for TDP implementation in order to obtain the total annual marine data management budgets. The total ten-year marine data management budget is $22.210 million.

TABLE IV-41

TECHNICAL DEVELOPMENT PLAN SPECIFICATION
FEDERAL WATER POLLUTION CONTROL ADMINISTRATION

FY	NEW EQUIPMENT REQUIREMENTS	NEW EQUIPMENT COSTS (MILLIONS)	NUMBER OF ADDITIONAL DISCIPLINE PERSONNEL[1]	NUMBER OF ADDITIONAL ANALYSTS/ SOFTWARE PERSONNEL	ADDITIONAL PERSONNEL COSTS[2] (MILLIONS)	ESTIMATED EXISTING FWPCA MARINE DATA BUDGET[3] (MILLIONS)	TOTAL ANNUAL BUDGET (MILLIONS)
71	USE OF DEPARTMENT OF INTERIOR COMPUTER (1 HOUR PER DAY)	$.100[a]	11	7	$.270	$1.000	$1.370
72	(1 HOUR PER DAY)	.100[a]	9	7	.240	1.050	1.390
73	(2 HOURS PER DAY)	.200[a]	10	11	.315	1.103	1.618
74	(2 HOURS PER DAY)	.200[a]	9	7	.240	1.158	1.598
75	70 SETS OF SENSORS FOR 10 ESTUARIES (3 HOURS PER DAY)	.700[b] .300[a]	10	15	.375	1.216	2.591
76	70 SETS OF SENSORS FOR 10 ESTUARIES 14 DATA SETS 11,000 MILES OF TELEPHONE LINE CHARGES (3 HOURS PER DAY) COMMUNICATIONS CONTROLLER	.700[b] .110[c] .300[a] .067	11	19	.450	1.277	2.904
77	(8 HOURS PER DAY)	.110[c] .800[a]	16	12	.420	1.341	2.671
78	(8 HOURS PER DAY)	.110[c] .800[a]	16	4	.300	1.408	2.618
79	(8 HOURS PER DAY)	.110[c] .800[a]	16	4	.300	1.478	2.688
80	(8 HOURS PER DAY)	.110[c] .800[a]	16	4	.300	1.552	2.762
TEN YEAR TOTALS		$6.417			$3.210	$12.583	$22.210

[1] Biologists, physical 7 chemical oceanographers

[2] Discipline & software development personnel priced @ $15,000 per annum

[3] Compound annual 5% increase

a Annual charge

b Purchase

c Lease charges

ONSHORE BUOY DATA MANAGEMENT

U.S. COAST GUARD

This TDP is addressed to the management of data collected from the National Data Buoy System after the data have been transmitted to shore facilities. Early planning and coordination for the management of buoy data at buoy system intermediate storage and processing facilities, forecasting centers (NMC, FNWC), and at national data centers (NODC, NWRC and GLDC), is necessary. Some of the areas which must be considered are data formats, data codes, space-time correlation of data from the buoy arrays, schedules for transmission to data centers, and data quality standards and controls. The National Data Buoy Systems Project Office of the U.S. Coast Guard is actively developing plans for these areas. As presently conceived, the National Data Buoy System will consist of 261 buoys spaced approximately 500 nautical miles apart in the deep ocean (DO) area (greater than 400 nautical miles from North American coasts), and 279 buoys spaced approximately 100 nautical miles apart in a 400-mile band around coastal North America (CNA).[1]

Buoys in the DO set will report 4 times per day at 0000 GMT, 0600 GMT, 1200 GMT, 0300 GMT, 0600 GMT, 0900 GMT, 1200 GMT, 1500 GMT, 1800 GMT, and 2100 GMT. As conceived, data reporting will be on a synoptic rather than a continuous is. Buoy read-out will be controlled from shore with the aid of computer programs stored in shore processors. Computer-generated commands will initiate such functions as buoy read-out of its sensors, transmission of data to shore or ship communication hubs, assignment of HF bands and channels for data transmission, verification of data quality and retransmission of rejected data.

Since data reporting is on a synoptic basis, the volume of data transmitted each day is not significant in terms of the processing and storage requirements at either buoy system shore facilities or at national data centers. The key statistics associated with the National Data Buoy System are shown in Table IV-42. This table shows number of buoys for DO and CNA areas, planned

[1] Preliminary Concept Formulation Summary for National Data Buoy Systems, U.S. Coast Guard National Data Buoy Systems Project Office, Washington, D.C., 1 October 1968.

TABLE IV-42

NATIONAL DATA BUOY SYSTEM - KEY STATISTICS

	NUMBER OF BUOYS	PLANNED DAILY FREQUENCY OF REPORTING	MESSAGE LENGTH[1] (BITS)	MESSAGE TRANSMISSION TIME[2] (SECONDS)	TOTAL DAILY VOLUME OF DATA TRANSMITTED[3] (10^6 BITS)	DATA TRANSMISSION TIME PER REPORT TIME FOR ALL BUOYS[4] (MINUTES)	MAXIMUM POSSIBLE DAILY FREQUENCY OF REPORTING[5]	MAXIMUM POSSIBLE TOTAL DAILY VOLUME OF DATA TRANSMITTED[6] (10^6 BITS)
DEEP OCEAN (500 N.MI. SPACING)	261	4	2,604	28.5	2.74	22.2	22	15.11
COASTAL NORTH AMERICA (100 N.MI. SPACING)	279	8	1,992	22.5	4.45	20.9	44	24.5
	540				7.19 (1.2×10^6 CHARACTERS)	43.1		39.6 (6.6×10^6 CHARACTERS)

3,276 DAILY OBSERVATIONS (NUMBER OF BUOYS X REPORTING FREQUENCY) WITH PLANNED SYSTEM
18,018 POTENTIAL DAILY OBSERVATIONS

1. For 20 levels in vertical stratum.
2. Based on 100 bits per second transmission rate and 2.5 second buoy interrogation time.
3. 261 buoys times four times per day times 2,604 bits per message for deep ocean; 279 buoys times eight times per day times 1,992 bits per message for coastal North America.
4. Based on use of one HF band with 10 channels per band (10 simultaneous transmissions per report period) 100 bits/sec per channel plus 2.5 seconds per buoy interrogation time.
5. Based on use of one HF band with 10 channels per band (10 simultaneous transmissions per report time) and ratio of number of coastal North America buoys to number of deep ocean buoys = two.
6. (22/4) (2.74×10^6 bits) for deep ocean; (44/8) (4.45×10^6 bits) for Coastal North America.

frequency of reporting, message length and transmission time per buoy per reporting time, and the total daily volume of data which would be generated by the National Data Buoy System. The daily volume of data is based on the use of a single HF band for a given reporting period, 10 channels per band used simultaneously and a transmission speed of 100 bits per second per channel. With 6 hourly reporting from DO buoys and 3 hourly reporting from CNA buoys, the total amount of data generated per day is 7.19 million bits or about 1.2 million characters. This is the equivalent of 6 percent of a reel of magnetic tape.

The maximum amount of data which can be generated per day is governed by (1) number of buoys, (2) message length, (3) data transmission speed, (4) number of data channels available simultaneously, (5) buoy interrogation time, (6) acceptable time delay in data receipt (7) buoy reporting frequency. Based on using the values of (1) through (5) given in Table IV-42 and an acceptable time delay of 1 hour between observation time and the receipt of data at forecast centers, the maximum reporting frequencies are calculated. The frequencies were calculated to maintain the two-to-one ratio between CNA and DO reporting frequencies. The maximum reporting frequencies are based on using all of the available time for data transmission, i.e., there is no idle time between buoy data transmissions. On this basis, the maximum amount of data which would be generated per day is 39.6 million bits or about 6.6 million characters, or about one-third of a reel of magnetic tape.

Continuous sensing is not possible, given the low data rate of HF channels and the large number of buoys proposed. Even with the maximum utilization of available transmission time as just illustrated, the time interval between DO buoy reports is 1 hour and 6 minutes and between CNA buoy reports is 33 minutes. If it is desired to reduce the reporting frequency even further, the number of buoys would have to be reduced. This is shown in Table IV-43. The maximum amount of data which can be generated is constant for a given channel data transmission rate, number of channels used simultaneously and buoy interrogation time. Any

TABLE IV-43

RELATIONSHIP OF NUMBER OF BUOYS TO REPORTING FREQUENCY WHEN ALL AVAILABLE TIME IS USED FOR DATA TRANSMISSION

	NUMBER OF DEEP OCEAN (DO) BUOYS	NUMBER OF COASTAL NORTH AMERICA (CNA) BUOYS	DAILY FREQUENCY OF DO BUOY REPORTING	TIME INTERVAL BETWEEN DO BUOY REPORTING	DAILY FREQUENCY OF CNA BUOY REPORTING	TIME INTERVAL BETWEEN CNA BUOY REPORTING
INCREASING SYNOPTIC QUALITY / INCREASING TIMELINESS	1,460*	1,560*	4	6 HOURS	8	3 HOURS
	730*	780*	8	3 HOURS	16	1.5 HOURS
	486**	520**	12	2.25 HOURS	24	1.12 HOURS
	365**	390**	16	1.5 HOURS	32	45 MINUTES
	261**	279**	22	1.1 HOURS	44	33 MINUTES
	182**	195**	32	45 MINUTES	64	22 MINUTES
	91**	97**	64	22 MINUTES	128	11 MINUTES

* Too high a data load on single HF band, transmitting on 10 channels simultaneously, in order to complete total transmission within one hour.

** Feasible for single HF band, transmitting on 10 channels simultaneously, in order to complete total transmission within one hour.

NOTES

• RATIO OF CNA TO DO BUOYS = 1.07 • RATIO OF CNA TO DO REPORTING FREQUENCY = 2 • 100 BITS/SEC TRANSMISSION SPEED ON SINGLE HF CHANNEL. 1,000 BITS/SEC TRANSMSSSION SPEED USING 10 CHANNELS OF ONE HF BAND SIMULTANEOUSLY • 2.5 SECONDS FOR BUOY INTERROGATION

EQUATION FOR COMPUTING RELATIONSHIP BETWEEN NUMBER OF BUOYS (N) AND FREQUENCY OF REPORTING:

$$\frac{NF(2604)+1.07(2F)(1992)}{1000} + [NF+1.07N(2F)](2.5) = (1440)(60). \qquad NF = 5870$$

N = NUMBER OF DO BUOYS
F = FREQUENCY OF REPORTING OF DO BUOYS
2,604 BITS = DO BUOY 20 LEVEL MESSAGE LENGTH
1,992 BITS = CNA BUOY 20 LEVEL MESSAGE LENGTH
1.07 = RATIO OF NUMBER OF CNA TO DO BUOYS

[1] All buoys use one HF band for given reporting period; transmit on 10 channels in HF band simultaneously; approximately 18,320 daily observations ; number of buoys X reporting frequency.

increase in number of buoys results in a decrease in the buoy reporting frequency, resulting in a hyperbolic relationship between frequency and number of buoys as shown in Figure IV-7. In order to achieve an increase in both the frequency of reporting and number of buoys, it is necessary to obtain data channels with higher transmission rates, such as satellite relays, and/or increase the number of HF frequency bands which can be used simultaneously. The latter alternative is not attractive because of the low reliability of some HF bands at certain latitudes and times of the year. Another constraint is that the entire buoy network must be read out and the data transmission completed within one hour after observation time. Using this constraint, the maximum number of buoys which can be deployed can be calculated. If a ratio of CNA to DO buoys of 1.07 (based on the ratio of planned 279 CNA buoys to 261 DO buoys) and a single HF band (10 channels used simultaneously) are assumed, a maximum of 486 DO buoys and 520 CNA buoys can be employed with reporting frequencies of 12 and 24 times per day, respectively. This is shown in Table IV-43. This establishes the upper limit on the number of buoys. Below this limit, there is a tradeoff between number of buoys and frequency of reporting. Several alternatives are shown in Table IV-43. The number of buoys in a network represents the number of synoptic data points. The reporting frequency is a measure of the timeliness of the data observations; it is also a measure of the ability of the system to record time series observations. Since the time constants of the oceans are relatively long, except for waves, the reporting frequency is not critical (within limits) for oceanographic forecasting and research. The increase in the synoptic power of the system through an increase in number of buoys is of greater significance. However, in the case of meteorological forecasting, the tradeoff between number of observation points and frequency of reporting is more critical. A very cost-effective way of increasing the number of data points is to use all of the available data transmission time for a given number of buoys. For example, by increasing the daily frequency of reporting of the proposed network from 4 (DO) and 8 (CNA) to 22 (DO) and 44 (CNA), the number of daily observations can be increased from 3,276 to 18,018 observations per

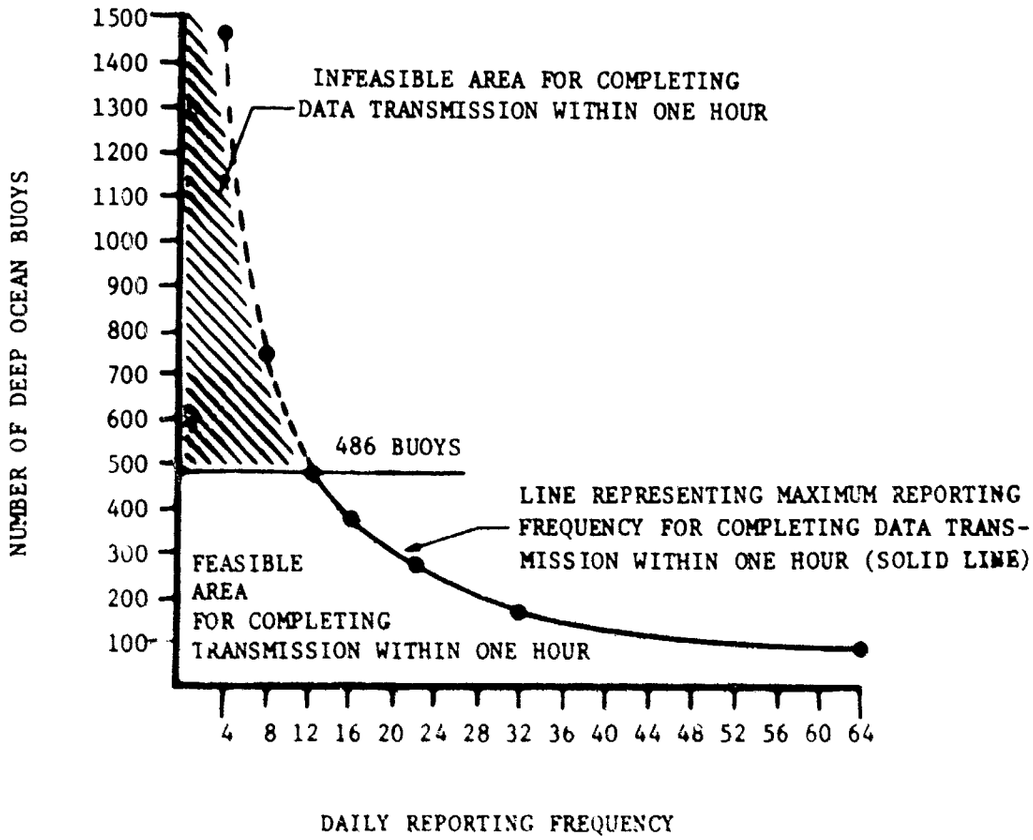

FIGURE IV-7. RELATIONSHIP BETWEEN NUMBER OF DEEP OCEAN BUOYS AND FREQUENCY OF DAILY REPORTING WHEN ALL AVAILABLE TIME IS USED FOR TRANSMISSION

day. As already demonstrated, this amount of data can be accommodated within one HF band (using 10 channels simultaneously). There is no increase in data transmission speed required. Rather, transmission would occur continuously at the same rate. The proposed shore-based computer control of frequency band selection could be employed to select, on a more frequent basis, the best band for data transmission based on propagation characteristics and transmission distance requirements existing at each reporting cycle.

These calculations demonstrate that the volume of data generated per day by the National Data Buoy System will not strain the resources of data centers which receive the data. However, there are significant problems with respect to data format, codes, space-time correlation and quality control. Since the volume of data is so small and there is no urgency of data receipt at national data archival centers, data tapes could be mailed periodically (perhaps weekly or monthly) from buoy shore facilities to national data archival centers (NODC, NWRC, GLDC). These data should be formatted in synoptic and time series packages for transmittal to the data centers. Figure IV-8 illustrates the space-time data correlation problem and how the data might be assembled from daily inputs into temporary magnetic tape or disk pack data bases for periodic mailing to NODC, NWRC and GLDC (Great Lakes buoy data). Eight time-series observations would be obtained each day from 279 CNA buoy locations, and four time-series observations would be obtained each day from DO 261 buoy locations. It is recommended that these daily time-series observations be aggregated for a specified time period (perhaps for a week or month). This time period would be jointly established by the Coast Guard and representatives of NODC, NWRC and the GLDC. This group would also establish data format requirements: sequence of parameters in the tape or disk record, field lengths, codes (BCD, binary or other) and content and placement of identifying information (geographical location, time of recording, precision and accuracy of recording, etc.). Standards would be established for the acceptance of data. If data have been collected in sufficient quantity in the past from other platforms at a given buoy location, they could be used to provide statistical

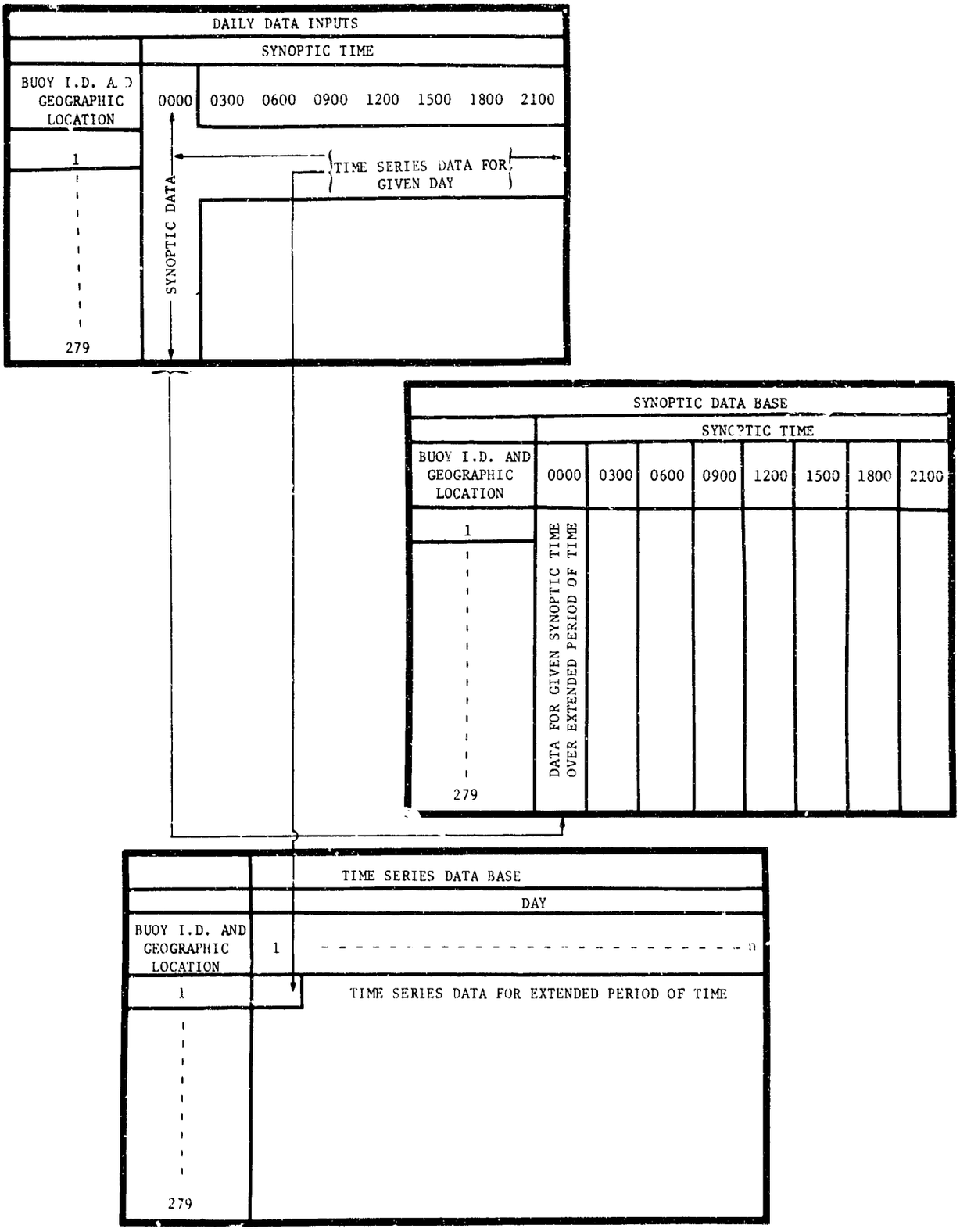

FIGURE IV-8. BUOY DATA SYNOPTIC AND TIME SERVICE CORRELATION

confidence intervals for use in accepting or rejecting buoy data. If little data history exists, reasonableness checks could be employed until a sufficient amount of data has been collected to provide statistical confidence intervals.

Synoptic data which are required by forecast centers will be sent over land lines to the centers from the buoy system communication hubs. If the data are transmitted over land lines after each buoy has transmitted its data, low-speed private lines (150 bits per second) could be employed, since a 2604 bit single buoy message could be transmitted over land to forecast centers in 18 seconds. However, if data are collected at a communications hub (services a maximum of 30 buoys) for all 30 buoys prior to transmitting the data over land lines, low-speed (150 bits per second) transmission would require 540 seconds (18 seconds x 30 buoys) or 9 minutes. A voice grade line (2400 bits per second) could transmit the data in 33 seconds at higher cost. If transmission over land lines is delayed until all 30 buoys transmit data to the communication hub, there will be a total delay of 14.8 minutes (30 buoys 28.54 sec.) $\div$ 60 = 14.3 minutes transmission time to shore plus .5 minutes for voice grade line transmission over land. If data are transmitted over land lines after the data from each buoy are received on shore, there will be a 28.5 second transmission delay from the buoy to shore plus an 18 second transmission delay (slow-speed line) over land lines. The latter alternative is preferable. The only advantages of the former alternative are that it would permit the assembly at the communications hub of a synoptic report for 30 data points (30 buoys) and would permit the averaging of measurements, where this is necessary. However, data assembly and data averaging could be performed at the forecast centers, since observation time, parameter type and vertical level of data recording will presumably be recorded as part of the data identification, thus permitting the data from a given synoptic time to be correlated and averaged at the forecast center.

A proposed schedule of implementation for a technical development plan pertaining to the Coast Guard activity in onshore buoy data management is shown in

Table IV-44. The number of personnel required for Coast Guard management of the TDP, analyst and software personnel and computer operations personnel are shown in this table. The recommended TDP specification for equipment, personnel and budget required to implement the TDP is shown in Table IV-45 . This table shows both new resources and a projection of existing resources which are required to implement the TDP. New resources consist of computing and data transmission control equipment at 23 communications hubs, additional Coast Guard commissioned personnel and additional system analyst/software and computer operations personnel. Existing personnel consists of the staff of the National Data Buoy System Project Office. It is estimated that this staff will consist of 14 people in FY 71 and that it will grow at an annual compound five percent rate. The key elements of the TDP are:

- System analysis and computer programming activities pertaining to:
  - buoy data formats and codes for data centers
  - space-time data correlation for data centers
  - data quality control for data centers
  - land line data communication for data centers
  - buoy interrogation control
- Computer and data transmission control equipment in each of 23 communications hubs for:
  - buoy data formatting and code conversion for data centers
  - data quality control for data centers
  - space-time data correlation for data centers
  - data message routing control and synchronization for data transmission to forecast centers
  - control of interrogation of buoys
  - buoy HF band and channel assignment and data retransmission control
- Land communication lines for transmitting buoy data to FNWC, NMC and 14 Weather Bureau Offices having marine forecasting responsibilities
- Mail transmission of data to NODC, NWRC and GLDC

The total ten-year Technical Development Plan cost is $31.869 million; $29.232 million of this amount is for new personnel and equipment.

TABLE IV-44
U.S. COAST GUARD - PROPOSED SCHEDULE OF TECHNICAL DEVELOPMENT PLAN
IMPLEMENTATION - NATIONAL DATA BUOY SYSTEM - ONSHORE BUOY DATA MANAGEMENT

	NUMBER OF PERSONNEL[1]									
	FY 71	FY 72	FY 73	FY 74	FY 75	FY 76	FY 77	FY 78	FY 79	FY 80
	a b c	a b c	a b c	a b c	a b c	a b c	a b c	a b c	a b c	a b c
ESTABLISH DATA FORMAT[2] REQUIREMENTS FOR DATA CENTERS[3]	1 1									
ESTABLISH SPACE-TIME CORRELATION REQUIREMENTS FOR DATA CENTERS	1 1									
ESTABLISH LAND TRANSMISSION TIME SCHEDULES TO DATA CENTERS	1									
DEVELOP DATA QUALITY CONTROL STANDARDS AND EDITING PROCEDURES	1 3									
DEVELOP SOFTWARE FOR DATA FORMAT AND CODE CONVERSTION	3	1	1	1	1	1				
DEVELOP SOFTWARE FOR ON-SHORE QUALITY CONTROL AND EDIT OF DATA		5	1	1	1	1	1			
DEVELOP SOFTWARE FOR CONTROLLING TRANSMISSION OF DATA OVER LAND	10	10	2	2	2	2	2			
DEVELOP SOFTWARE FOR ON-SHORE SPACE-TIME CORRELATION OF DATA	5	1	1	1	1	1				
ACQUIRE SHORE FACILITY COMPUTERS AND LAND LINE COMMUNICATION FACILITIES FOR MOD 0 SYSTEM (35 BUOYS)			2 3							
SHORE FACILITY DATA PROCESSING AND TRANSMISSION OF DATA TO DATA CENTERS BECOMES OPERATIONAL FOR MOD 0 SYSTEM				2 3 (ASSUMPTION)						
ACQUIRE SHORE FACILITY COMPUTERS AND LAND LINE COMMUNICATIONS TERMINALS FOR MOD 1 SYSTEM (505 BUOYS)				4						
SHORE FACILITY DATA PROCESSING AND TRANSMISSION OF DATA TO DATA CENTERS BECOMES OPERATIONAL FOR MOD 1 SYSTEM					4 6 (ASSUMPTION)	4 6	4 6	4 6	4 6	4 6
INCREASE FREQUENCY OF REPORTING FROM BUOYS FROM 4 PER DAY (DO) AND 8 PER DAY (CNA) TO MAXIMUM OF 22 PER DAY (DO) AND 44 PER DAY (CNA)									5	1
TOTAL PROFESSIONAL PERSONNEL	4 23	15 2	2 3 5	6 9 5	4 6 5	4 6 5	4 6 3	4 6	4 11	4 6 1

1 a = Number of Coast Guard commissioned personnel. b = Number of analyst/software personnel for system and computer program development. c = Number of programmers for software maintenance.

2 Parameter sequence, data code, identifying data (buoy location, vertical sampling levels, of recording).

3 NMC, FNWC, NODC, NWRC, GLDC, WB offices with marine responsibilities.

TABLE IV-45

TECHNICAL DEVELOPMENT PLAN SPECIFICATION - U.S. COAST GUARD
NATIONAL DATA BUOY SYSTEM - ONSHORE BUOY DATA MANAGEMENT

FY	NEW EQUIPMENT REQUIREMENTS	NEW EQUIPMENT COSTS (MILLIONS)	NUMBER OF ADDITIONAL COMMISSIONED PERSONNEL[1]	NUMBER OF ADDITIONAL ANALYSTS/ SOFTWARE PERSONNEL[1]	NUMBER OF ADDITIONAL COMPUTER OPERATIONS PERSONNEL[2]	ADDITIONAL PERSONNEL COSTS[1] (MILLIONS)	ESTIMATED EXISTING BUOY PROJECT STAFF BUDGET[3] (MILLIONS)	TOTAL ANNUAL BUDGET (MILLIONS)
71			4	23		$.405	$.210	$.615
72				17		.255	.221	.476
73	1 COMMUNICATIONS HUB COMPUTER & DATA TRANSMISSION CONTROL EQUIPMENT	$.703[a]	2	8	3	.150	.232	1.085
74	22 COMMUNICATIONS HUB COMPUTERS & DATA TRANSMISSION CONTROL EQUIPMENT. 9K MILES LOW SPEED (150 BPS) LINE & DATA	15.466[a] .046[b]	6	14	69	.990	.244	16.746
75	207K MILES LOW SPEED (150 BPS) LINE & DATA SET CHARGE	.982[c]	4	11	69	.915	.256	2.153
76	207K MILES LOW SPEED (150 BPS) LINE & DATA SET CHARGE	.982[c]	4	11	69	.915	.267	2.164
77	207K MILES LOW SPEED (150 BPS) LINE & DATA SET CHARGE	.982[c]	4	9	69	.885	.280	2.147
78	207K MILES LOW SPEED (150 BPS) LINE & DATA SET CHARGE	.982[c]	4	6	69	.840	.294	2.116
79	207K MILES LOW SPEED (150 BPS) LINE & DATA SET CHARGE	.982[c]	4	11	69	.915	.309	2.206
80	207K MILES LOW SPEED (150 BPS) LINE & DATA SET CHARGE	.982[c]	4	7	69	.855	.324	2.161
TEN YEAR TOTALS		$22.107				$7.125	$2.637	$31.869

1 Priced at $15,000 per annum per man year (including benefits).

2 Three computer operations personnel for each communication hub; priced @ $10,000 per annum per man year.

3 1971 National Data Buoy System Project office FY 71 strength estimated to be 14 people. Five percent compound annual increase in budget assumed.

a Purchase of processor (65K bytes), 5 magnetic tape units and control unit, 1 printer, 1 card reader/punch 1 data transmission control unit, external interrupt, real time closk and storage protection.

b Lease charges for 1 MOD 0 communications hub transmitting data to FNWC (1 line), NMC (1 line), and one Weather Bureau office (1 line). (3 lines) (3K miles/line) = 9K miles.

c Lease charges for 23 MOD 1 communications hubs transmitting data to FNW (23 lines), NMC (23 lines), and 14 Weather Bureau offices (23 lines). (69 lines) (3K miles/line) = 207K lines.

NATIONAL DATA CENTERS

NATIONAL OCEANOGRAPHIC DATA CENTER

Existing and planned NODC data bases are shown in Table IV-46. This table indicates the significant growth planned for NODC data bases. It also indicates that although the daily input in 1973 is less than a reel of tape, the input volume will be significant if all or most of these data are received in the form of handwritten logs which require keypunching. This 1973 input volume of data is equivalent to 100,000 punch cards. If all of these data had to be punched, it would require the services of one hundred keypunch operators in order not to develop a backlog. This situation emphasizes the need to obtain data from suppliers in magnetic tape or punch card form. If this proves infeasible, it may be necessary to design a mark sense form for the more routine measurements. These forms would be supplied to users for submitting their data to NODC. NODC would acquire mark sense reading equipment for automatic input of data.

Table IV-46 also indicates the infeasibility of storing all data on-line in direct access storage devices. About 9×10^9 characters will have to be stored by 1973. This could increase threefold by 1980. However, it is highly desirable to store NAMDI and NAPIS on-line and raw data for which frequent access is required. The problem of how much data to store on-line versus off-line can only be answered after a detailed analysis of the future demand for NODC data (existing and planned). This task should be given high priority in NODC development activities.

DATA BASE ORGANIZATION

The utility of national data bases could be improved by correlating the data in space (geographic location and depth of observation) and time (time of observation). This would involve the consolidation of data from various data bases (ocean station, BT, etc.) into one data base. All the data obtained from a given geographic location (1° square), depth and time would be stored as a

TABLE IV-46

NATIONAL OCEANOGRAPHIC DATA CENTER DATA BASE VOLUMES AND INPUT RATES

DATA BASE	1968[a] VOLUME (MILLIONS OF DECIMAL DIGITS/ CHARACTERS)	NUMBER OF TAPE REELS	NUMBER OF DISC UNITS	1973 VOLUME (MILLIONS OF DECIMAL DIGITS/ CHARACTERS)	NUMBER OF TAPE REELS	NUMBER OF DISC UNITS	DAILY INPUT (MILLIONS OF DECIMAL DIGITS/CHARACTERS) 1968	DAILY INPUT (MILLIONS OF DECIMAL DIGITS/CHARACTERS) 1973
• BT DATA (N)	180	4[b]	.4[c]	1,680[d]	37[c]	4[d]	.240	1.320
• OCEAN STATION DATA (N)	960	21	3	1,800	40	4	.300	.600
• BIOLOGICAL DATA (AN)	0			72	2	.4	.002	.009
• GEOLOGICAL DATA INVENTORY (AN)	6	.2	<.1	198	9	.9	.048	.160
• SURFACE CURRENT DATA (N)	270	6	.6	510	12	2	.090	.090
• DRIFT BOTTLE DATA (N)	12	.3	<.1	120	3	.3	.020	.090
• CHEMICAL DATA (N)	0			3	<.1	<.1		.024
• NEARSHORE DATA (N)	0			1,440	32	4		1.200
• STD (N)	0			1,800	40	4		3.600
• SUBSURFACE CURRENT DATA (N)	0			480	11	2		.007
• SEDIMENT CHEMISTRY DATA (N)	0			31	.7	<.1		.024
• GEOTHERMAL DATA (N)	0			7	.2	<.1		.006
• SATELLITE OCEANOGRAPHIC DATA SUMMARIES (N)	0			14	.4	<.1		1.206
• SOUND VELOCIMETER DATA (N)	0			420	10	1		.720
• UNDERWATER PHOTOGRAPHY INFORMATION INDEX (AN)	0			20	2	<.1		.048
• NAMDI (AN)	.24[e]			.84[e]	<.1	<.1		.001
	1,429	32	5	8,596	200	24	.700	9.101
	6 TO 1 INCREASE IN DATA BASE VOLUME IN 5 YEARS						13 TO 1 INCREASE IN INPUT IN 5 YEARS (LESS THAN A REEL OF INPUT)	

N = Numeric (decimal digits), AN = Alphanumeric (characters).

a. Digitized, processed and recorded in a data base.
b. Ten-120 character records per block, 1600 bpi, 9 track (46M decimal digits or 23M alphanumeric characters per reel). This does not correspond to present number of NODC tape reels, nor does it represent optimum compaction. Shown to indicate storage required using multiple records/block and high density tapes.
c. 466M decimal digits or 233M alphanumeric characters per unit. Not shown to suggest that all data should be stored on disc. Shown to indicate disc storage required if the data were stored on disc.
d. 56% per year compound growth rate; due to XBT.
e. Rough estimate.

NOTE: These calculations are based on the data volumes which appear in the NODC ADP Systems Study Data System Specifications, Volume II. This volume differs substantially from the data volume calculations which appear in Chapter III, Volume One.

unit in the consolidated data base. Currently, data bases are organized by method and instrument of data collection, e.g., BT. The method of data collection is important information, and should be retained in the data base, but it is not necessary or desirable to organize files on this basis. It would be more useful to employ a data base organization which would permit convenient access to all the data collected at a given location, depth and time. Also, the data base organization should provide the capability for retrieving the data for all or specified parameters under the following conditions: (1) at or between specified depths and for a specified location and time (water column data and vertical profiles); (2) at a specified depth and geographic region and for a constant or variable time of observation (water layer data and horizontal profiles); (3) at a specified observation or data collection time and for a specified geographic region and depth(s) (synoptic data); (4) at specified locations and depth(s) and chronologically ordered by time of observation (time series data,); (5) for specified parameter(s) value(s) or range of values and for a specified geographic region, depth ranges and time (surfaces of constant parameter value, e.g., surfaces of constant temperature or density; a surface of constant parameter value is the same as the traditional contour lines of constant parameter value except that three dimensions are used (depth in addition to latitude and longitude); (6) for a specified value or range of parameter(s) values for a specified depth and geographic region (contours of constant parameter value in two dimensions, e.g., contours of constant sea surface temperature, surface currents, water temperature or density at a specified depth, etc.); and (7) water column properties along a specified track (an assembly of water column properties data for a series of 1° squares along a specified track). Other examples could be cited. These examples serve to illustrate the types of presentation which could be produced.

Certain definitions which are relevant to the above discussion follow:

- Water column data: sets of data collected in a vertical water column at a given location and time. These data sets would contain all data collected in a particular water column (and

bottom and subbottom)--not just Nansen cast data alone. These data sets include more than the traditional ocean station data.

- Synoptic data: data obtained at a specified time or within a specified time interval from several or many locations.

- Time series data: sets of chronologically ordered data for specified locations and depths. The data may have been collected by different cruises and over long time intervals.

An important point is that the data storage and retrieval system produces the data assemblies from a diversity of data sources, which vary by cruise, method of data collected, time of collection, etc. These data assemblies may not strictly correspond to ocean station, synoptic and time series in the sense that these terms are sometimes applied. However, the method of data collection should not govern the methods used for storing and retrieving data. For example, the synoptic data may not be synoptic in the sense of 6 hourly ship reports used in a weather forecasting system. Rather, the synoptic data represents a correlation of cruise or survey data (where the cruises and surveys may be completely unrelated) which were taken at approximately the same time at different locations. Similarly, the assembly of time series data may represent the same parameter(s) collected at the same location, but by different cruises and at different times.

Although the availability in NODC bases of synoptic, time series and water column data, as defined in this discussion, is unknown, the degree to which existing NODC data could be correlated in space and time could be determined by a programmed search of NAPIS combined with a search of the data bases themselves for those data which have not been included in NAPIS.

Although probably little synoptic and time series currently exists in the NODC files which would meet the above definitions, future volumes of these data will

greatly increase as the result of receiving XBT and STD data collected by naval ships (via FNWC) and data collected by the National Data Buoy System.

A discussion of a method for storing data which would accomplish the data retrieval properties which have been described follows. The three dimensions (height, radius and circumference) of disk storage devices (or other three dimensional storage devices) are ideally suited to the implementation of the type of data base organization which has been described. The geometrical coordinates of the disk could correspond to the coordinates of the data as follows:

Geographical location (1° square)	- disk track and record (θ coordinate)
Depth	- disk surface (z coordinate)
Time of observation or data collection	- disk cylinder (γ coordinate)

This scheme is shown in Figure IV-9. Other storage schemes could also be employed. If data is stored in this manner, it is possible to retrieve time series data for various geographic locations and depths; synoptic data for various geographical locations and depths; and all or certain data for a given location, depth and time. It is possible to retrieve the various "data packages" currently. For example, as the disk rotates under the set of read-write heads (one for each disk surface), cylinders of data retrieved along the θ (location) coordinate for a given γ (time) coordinate represent synoptic data; cylinders of data retrieved along the γ (time) coordinate for a given θ (location) coordinate represent time series data; data retrieved along the z (depth) coordinate for given γ (time) and θ (location) coordinates represents water column data; data retrieved along the θ (location) coordinate for given z depth (coordinate) and γ (time) coordinates represent constant depth horizontal "slices" through the ocean; data retrieved for a given r, θ, and z, represents all the data for a given time, location, and depth. There is no limit (other than the disk storage capacity) on the number of synoptic, time series, water column and single point retrievals which could be accomplished in a single search operation. Of course, time series retrieval will require track switching and other

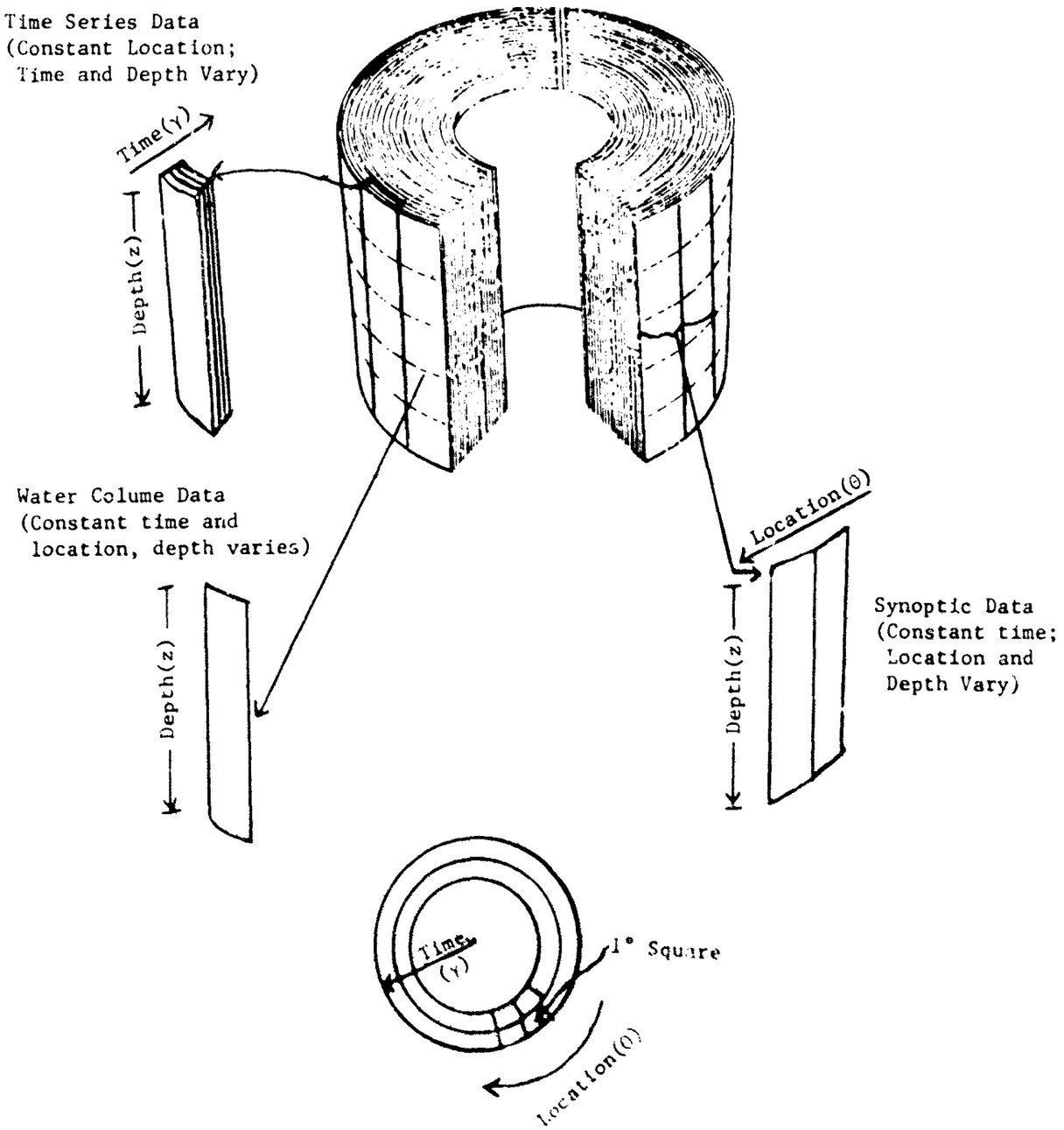

FIGURE IV-9. METHOD OF STORING OCEANOGRAPHIC DATA ON DISK STORAGE

forms of data retrieval may require track switching if the geographical and time domains of the data to be retrieved are extensive.

The data base organization which is employed will be influenced in part by the user demand for data. If time series data are requested more frequently than ocean station data, the z coordinate would be used for time and the γ coordinate for depth. Certain difficulties in the data storage scheme should be noted. One is that voids in certain data cells may arise due to large gaps in collected data in terms of location, time and depth. Secondly, the number of disk surfaces, tracks and records will not always correspond to the number of different locations, depths and observation times used in the storage system. Possible solutions to the first problem is to leave voids in certain data locations and preserve the integrity of the addressing scheme (e.g., leave room for 1° squares for which no data is currently in NODC bases). This solution would probably be very wasteful of storage space. A better solution would be to pack the data based on locations, depths and times which are currently represented in the data base; temporarily store new 1° square data sets out of sequence on the disk; and periodically reorganize the data base into a completely sequentially addressed system. This can be performed by copying and merging the disk data onto "scratch" disks.

An automated directory of data would be used in conjunction with the storage and retrieval of the environmental data. This directory would contain information about the characteristics of the stored environmental data. It would contain much of the information now contained in NAMDI and NAPIS, but in addition would contain the storage locations of various classes of data. If data is stored on disk, the directory would contain disk head, track and record number addresses. If the data is stored on magnetic tape, the directory would contain tape reel number and the location of a given data set relative to other data sets. The purpose of the directory is twofold. First, it serves to provide information to the user and data center concerning the availability and characteristics of

stored data, i.e., cruise, date, ship track, institutions, instruments used, etc. Secondly, the directory provides pointers to the machine locations of classes of data, e.g., water column, water layer, synoptic, time series, etc. Ideally, the directory should be stored on disk. If stored on disk, the directory could be organized with the same coordinate system as used for the data itself.

The directory contains the storage locations of data which is indexed by geographic location, depth and time. In addition to storage addresses, the directory would contain coded information which indicates the type of data stored. Thus, the directory would provide the address or range of addresses of various data sets, after t correspondence (by computer Program) between the nature of the data retrieval (location, depth, time and parameter type) and the computer address has been made. The address information would be inserted in data retrieval routines. The data directory must, of course, be mainted along with the data bases themselves as new data are incorporated in the system.

This type of data organization would also be appropriate for use in conjunction with a "live atlas" presentation. More importantly, it would pull together the data in a fashion which corresponds to the description of the ocean system. The data storage system would become an analog of the world oceans not only for the purpose of specific data retrieval, but for application in oceanographic modeling, as well. In particular, the system would have direct application to computer graphics. Since the data would be organized as a model of the oceans (with rapid access capability), the graphic capability could be applied to portray the types of data presentations described earlier.

MASTER MARINE DATA BASE DIRECTORY

A master directory for all data bases and analytic programs of common interest to the marine environment agencies and affiliated research organizations and institutions should be created. Each data base and program should be sufficiently

identified and tagged to permit any agency to locate a given data base or program source and be aware of its general structure and content. It is recommended that the responsibility for creating, maintaining, and distributing the master directory reside with one marine agency, the National Oceanographic Data Center (NODC). It is further recommended that NODC generate the directory according to the specification guidelines contained herein and to provide periodic updates and revisions. All participating agencies would provide NODC with an original listing and description of their files, which are of common agency interest, and to further provide NODC with information regarding any changes in the files and programs, the addition of new files to their data bases, or the deletion of out-of-date files and programs.

Directory Structure

The master directory would be developed, maintained, and produced employing the digital computer to be installed at NODC. All existing marine environment data files would be identified by:

- functional type
- file structure
- file format
- computer source
- arithmetic accuracy
- parameter contents
- parameter ranges
- file size
- date of file creation
- last reported revision
- file source
- file author
- accessibility
- programming language
- other pertinent information

Each agency would catalog its data files according to the above identifiers and provide NODC with a set of punched cards or magnetic tape containing the above information in a set of fixed format fields specified by NODC. NODC in conjunction with other user agencies would derive a catalog of data base functional types including such descriptors for the data as: temperature data, salinity data, bathymetric map data, etc., with sufficient subcategories to provide a useful level of detail. These functional categories and subcategories will be coded and the codes distributed to all participating agencies in the form of a data base functional code index. Each agency will employ these codes in identifying their data. File structures will be identified by record and block sizes and lengths and formats by number of fields, widths and code set (by identification code specified by NODC).

It is anticipated that the data base descriptions will occupy two or three 80 column punched cards per data base. Approximately 1,000 entries may be expected during FY 71, up to 10,000 entries by FY 80.

The master directory will be cross-indexed by NODC to permit rapid retrieval of data base searches for all identifiers. An inverted or multilevel index should be created which will link all related author, parameter, date, and other retrieval keys. The directory and index should reside on rapid access disc file storage. No more than a few records will be required to retrieve and print out results for requests for data bases of certain functional type, author source, date of origin, agency source, etc.

Directory Inquiries and Distribution

The master directory developed by NODC will be printed out in hard copy form and distributed to all participating agencies during the initial period of its implementation. This directory will be revised and updated on a quarterly basis. It is expected, however, that the size of the directory and requirements for cross references will exceed the capabilities of the simple hard copy publication format. Consequently, the directory will be designed at its

inception to permit full implementation for future remote access computer facilities at NODC. Any agency desiring information regarding existing data bases or programs would enter their requests via on-line, keyboard-printed terminals located in their facility. The requests will be routed to NODC and an automatic and immediate file search of the directory and its associated indexes will be conducted on an agency time-shared basis. The results of the file search will automatically be sent back to the requesting agency and printed out on their keyboard-printer terminal.

Data Base Sharing

Operating in conjunction with the master marine directory will be a system for all marine agencies to share data as needed. This is, of course, done now but not to the extent made possible by the master directory facility. Once the data files of interest to a given agency are located, they may be requested from the source agency. Magnetic tape reels or casettes, or punched cards, may be employed to send requested data through mails to destination agencies. This is the simplest and most economical means of data distribution, but it is slow. It is anticipated that marine agencies will want to employ a more technologically advanced means of retrieving data from other sources in the future. It is proposed that in FY 80 marine agencies begin the implementation of a data network that will permit requests for data to be routed to source agencies and the actual data to be electronically transmitted to the requesting agencies. The agency technical development plans have recommended the future installation of computer data communication couplers. These couplers will serve to tie each agency to the common communication network.

Two primary requirements must be satisfied in order to implement the common interchange of marine data and programs:

1. Guidelines for specifying data descriptors to be employed as headers for all data bases.

2. A communication network offering message and data routing and control.

All data bases created by participating agencies will require a header record identifying the contents and structure appended onto each file. This record may be used for automatic code translation and format conversion when data are exchanged between agencies. The communication network will be composed of small communication-control processors that can act as interfaces between agencies and the communication network and as data converters of data from one computer system to another. Policy guidelines must be set down to exclude data base codes and structures not compatible with normal agency computer capabilities.

With the communication network, an agency may conduct a directory search from its remote terminal in conjunction with the NODC master directory. Once the required files are located, a request may be entered into the data communication network to have the entire file (or some part thereof) or programs transferred to the requesting agency's computer. In this way, analysis may be conducted rapidly and data may be pooled from a number of sources.

Other highlights of the TDP (Table IV-47) are the following:

- Establish a quick answering service for requests received by telephone with the use of an in-house terminal.
- Plan for data acquisition from buoys and satellites: format; code; data base organization; linkages to National Data Buoy System, NESC and ERAP satellite experiments.
- Establish a magnetic tape to magnetic transmission capability over telephone lines (off-line tape unit at sending end to off-line tape unit at receiving end) with FNWC (for receipt of XBT and other oceanographic data and for transmission of BT and ocean station data to FNWC) and with NWRC (for receipt of NWRC SST and wave data and for transmission of BT and ocean station data to NWRC).

TABLE IV-47
TECHNICAL DEVELOPMENT PLAN SPECIFICATION
NATIONAL OCEANOGRAPHIC DATA CENTER

FY	ACTIVITY*	ADDITIONAL HARDWARE COSTS (MILLIONS)	ADDITIONAL ANALYST/SOFTWARE AND FIELD REPRESENTATIVES PERSONNEL REQUIRED	ADDITIONAL PERSONNEL COSTS (MILLIONS)	PRESENT NODC BUDGET (MILLIONS)	TOTAL BUDGET (MILLIONS)
71	(1) IMPROVE EXISITING DATA BASES[1] (2) DETAILED ANALYSIS OF CURRENT & POTENTIAL DATA DEMAND[2]. DEVELOP CRITERIA FOR ACCEPTANCE OF DATA (3) EMPHASIZE IMPROVEMENTS IN EXISTING SERVICES[3] RELATIVE TO OTHER ACTIVITIES. (4) ACQUIRE SENIOR INFORMATION SCIENTIST (5) EXPAND NAMDI[4]		5	$.075	$2.625**	$2.700
72	(5) (6) DATA BASE DEVELOPMENT[5] (GDS) (7) REORGANIZE DATA BASES[6] IN ACCORDANCE WITH DATA DEMAND FROM (2)		15	.225	2.756	2.981
73	(5) (6) (5A) DEVELOP INVENTORY OF OCEAN ENGINEERING DATA (PART OF NAMDI) (8) INCORPORATE INSTRUMENTATION DATA (FACT SHEETS) WITH DATA BASES (9) ACQUIRE DATA FOR NEW DATA BASES[5]		16	.240	2.894	3.134
74	(9) (10) ASSIGN FIELD REPRESENTATIVES TO FOUR ADDITIONAL NODC/NWRC OFFICES. EXPAND CONTACTS WITH USER COMMUNITY. (11) ESTABLISH TELETYPE COMMUNICATION WITH FIELD OFFICES (12) DEVELOP IN-HOUSE GRAPHICS TERMINAL SOFTWARE (LIVE ATLAS AND ON-LINE GENERATION OF PLOTS AND SUMMARIES (13) ESTABLISH OCEANOGRAPHIC COMPUTER USERS GROUP & DEVELOP INVENTORY OF OCEANOGRAPHIC SOFTWARE	$.098[a]	18	.270	3.039	3.407

Footnotes appear at end of chart.

TABLE IV-47 (CONT'D)
TECHNICAL DEVELOPMENT PLAN SPECIFICATION
NATIONAL OCEANOGRAPHIC DATA CENTER

FY	ACTIVITY*	ADDITIONAL HARDWARE COSTS (MILLIONS)	ADDITIONAL ANALYST/SOFTWARE AND FIELD REPRESENTATIVES PERSONNEL REQUIRED	ADDITIONAL PERSONNEL COSTS (MILLIONS)	PRESENT NODC BUDGET (MILLIONS)	TOTAL BUDGET (MILLIONS)
75	(12) (13) DEVELOP REMOTE TERMINAL SOFTWARE FOR EIGHT FIELD OFFICES & FOR REMOTE QUERY OF NWRC BASES (14) ESTABLISH SERVICE TO RESPOND TO REQUESTS RECEIVED BY TELEPHONE WITH THE USE OF ON-LINE TERMINAL (15) PLAN FOR BUOY DATA ACQUISITION STUDY FEASIBILITY OF REMOTE INTERROGATION OF BUOYS (16) DEVELOP OCEAN ENGINEERING DATA BASES (MATERIALS, CORROSION, AND INDICIES TO ENGINEERING REPORTS).	$.098[a]	28	$.420	$3.191	$3.709
76	(13) (15) (16) (17) ESTABLISH REMOTE TERMINAL COMMUNICATION WITH 8 FIELD OFFICES (18) ESTABLISH TAPE-TO-TAPE DATA TRANSMISSION WITH FNWC (19) ESTABLISH TAPE-TO-TAPE DATA TRANSMISSION WITH NWRC AND REMOTE ACCESS TO THEIR DATA BASES (20) CONDUCT FEASIBILITY STUDY FOR 4th GENERATION COMPUTER	.098[a] .067[b] .140[c] .012[d]	28	.420	3.351	4.088
77	(20) (21) ACQUIRE 4TH GENERATION COMPUTER (22) DEVELOP MODEL FOR PORTRAYING WORLDWIDE, HEMISPHERIC, AND REGIONAL OCEANOGRAPHIC CONDITIONS[7]	.098[a] .012[d] 1.000	23	.345	3.519	4.974

Footnotes appear at end of chart

TABLE IV-47 (CONT'D)
TECHNICAL DEVELOPMENT PLAN SPECIFICATION
NATIONAL OCEANOGRAPHIC DATA CENTER

FY	ACTIVITY*	ADDITIONAL HARDWARE COSTS (MILLIONS)	ADDITIONAL ANALYST/SOFTWARE AND FIELD REPRESENTATIVES PERSONNEL REQUIRED	ADDITIONAL PERSONNEL COSTS (MILLIONS)	PRESENT NODC BUDGET (MILLIONS)	TOTAL BUDGET (MILLIONS)
78	(22) (23) DEVELOP DATA BASES FOR BUOY AND SATELLITE DATA	$.098[a] .012[d]	24	$.360	$3.695	$4.165
79	(22) (23) (24) PROVIDE CROSS REFERENCES, DATA, REPORTS, AND PRODUCTS IN DATA BASES	.098[a] .012[d]	27	.405	3.880	4.395
80	(22)	.098[a] .012[d]	23	.345	4.074	4.529
	TEN YEAR TOTALS	$1.953		$3.105	$33.024	$38.082

See following page for footnotes.

TABLE IV-47 (CONT'D)

FOOTNOTES

*Numbers in brackets ( ) are used to indicate continuation of activities over several years.

**FY 70 Budget = $2.5 million. 5% per year increase in "normal budget" assumed.

[1]BT Ocean Station and surface current. Compact data bases to reduce number of tape reels.

[2]Statistical distributions of frequency, volume, geographical location, depth and age of data requested by users (current and future).

[3]Faster retrieval through data compaction, increased production of summaries. Increased selectivity of data (location, depth, time), "Time series" and "synoptic" data generation from data bases.

[4]Industry, States, private citizen. Include geological and biological information inventories (with support from SOSC).

[5]Chemical, nearshore, STD, subsurface current, sediment chemistry, geothermal.

[6]Store high frequency of access and fast response time data in direct access storage; store less active data in tape storage. Move inactive data to archival storage.

[7]Joint effort with NWRC.

[a]Lease charges for Teletype communication between NODC and eight NODC/NWRC offices. Teletypes, data sets, and dial up line charges.

[b]Purchase of data transmission control and communication terminals for remote query of NODC data bases from eight NODC/NWRC offices.

[c]Purchase of magnetic tape data transmission equipment for transmitting data tape-to-tape over telephone lines between FNWC and NODC and between NWRC and NODC. Also includes cost of communication terminal for remote query of NWRC data bases.

[d]Private line lease charges for transmission of data, tape-to-tape, between FNWC and NODC and between NWRC and NODC (50% charged to NODC).

- Provide for on-line access to NWRC data bases. This involves connecting a NODC computer terminal to a telephone line (dial up or dedicated) to the NWRC marine surface observation file for the purpose of direct inquiry to and remote manipulation of the NWRC data base. This is not the same as the off-line magnetic tape transfer referred to above. The tape transmission system is for the bulk transfer of data. The inquiry system is for obtaining answers to specific inquiries which may require access to NWRC data. A similar terminal would be established at NWRC for connection to NODC data bases.

- Establish regional offices at 8 marine science institutions (names appear in the Executive Summary) for the purpose of better serving the needs of regional and local users and to provide increased opportunity for NODC liaison personnel to acquire data from scientific institutions and other regional sources. Initially, conventional Teletype communication would be established between the 8 offices and NODC for the purpose of transmitting requests for data and for sending data to the regional offices. Later, computer terminals would be installed in the regional offices for use by scientists, other users and NODC liaison personnel for obtaining data remotely and in an interactive mode. Since the data held by NWRC and the sample and specimen descriptions held by SOSC are also of interest to the marine community, it is proposed that the regional offices be jointly staffed by personnel from the three data centers and that operating costs be shared. It is recommended that NODC be named the lead agency for the establishment and management of the regional offices.

- Establish NODC as the non-defense ocean engineering referral center. Although the complete range of NODC ocean engineering

services cannot be specified at this time, it is clear that the initial activities should concentrate on developing references services and data bases for the following:

- references to ocean engineering reports (design studies, tests, accident reports, etc.),
- references to materials and corrosion data,
- references to sources of information concerning the effects of marine environment (wave forces) on vehicles, structures and instruments.

Later, as more experience is gained, data bases of the data themselves could be developed. Of particular importance are the data associated with the last named item.

It is anticipated that the Navy and CERC will make significant contributions (supply information of a non-defknse nature) to the NODC effort. The NODC effort would be focused on serving the needs of non-defense applications, particularly those of industrial, university and State data users.

- Develop, in conjunction with NWRC, data models for portraying worldwide, hemispheric and regional oceanographic and marine meteorological conditions.
- Develop statistical quality control models (based on confidence limits of historical data, instrument characteristics, environmental conditions, etc.) for classifying data submitted to NODC. Low quality or suspect data would not be rejected but would be flagged or stored in a separate file. Any data so identified would be printed out for human interpretation before classifying it as low quality. Data which exceed historical limits may represent valid anomalous conditions or new discovery, rather than low quality data.

- Develop data bases.
- Acquire Senior Information Scientist for system development.
- Analyze product and services requirements.
- Improve existing products (plots and summaries).
- Expand NAMDI to include statistics on platform types, geographic and vertical regimes of collected data, frequency of collection, instrumentation, etc.
- Acquire data for new data bases.
- Develop graphics terminal capability for plots, summaries, etc.

The ten-year cost of implementing the NODC TDP is $38,082,000. Funds have been included for the development of a Master Marine Data Directory under the headings of "Expand NAMDI," "Develop Inventory of Ocean Engineering Data (Part of NAMDI)" in Table IV-47. A continually expanded NAMDI is the Master Marine Data Directory.

NATIONAL WEATHER RECORDS CENTER

As noted in the following quotation from the Environmental Data Service publication, "A Ten-Year Plan for the Storage and Retrieval of Environmental Data," opportunities do exist for improving the management of marine data at the National Weather Records Center:

> "This ten-year plan for storage and retrieval of environmental data is designed to improve and modernize the existing information retrieval systems in the data centers of the Environmental Data Service, ESSA, and to provide protection for the files against loss by catastrophe and deterioration through use.
>
> "ESSA's data centers operate as data banks for large classes of environmental records. The data in these records are processed at the centers and then made available for use in agriculture, aviation, commerce, construction, industry, navigation, public health, space exploration, etc., in the forms of routine publications and specially-designed summarizations for government agencies, the scientific community, and the general public.
>
> "In the sixteen years since the establishment of the largest of these data centers, the National Weather Records Center (NWRC), data holdings have increased six-fold, and services have increased at least twenty-fold. Of necessity, information storage and retrieval systems have been developed on an expedient basis. New data forms, such as satellite data (in extremely large volume), computer output of analyzed weather maps, etc., have complicated the servicing problem in recent years.
>
> "The fundamental objective of this plan is to integrate these data-handling systems, modernizing them where practicable. It is not expected that one system of indexing, storage, and retrieval will be suitable or practicable for all of the many data forms. A comprehensive study of data volumes, accession rates, and access requirements will be undertaken, and a proper system designed for each of the data forms to optimize the cost-effectiveness aspect of the indexing, storage, and retrieval for that data form. (In some cases, it may well be the system already in use.) These systems will then be integrated into an overall system for all of the centers, joined together through high-speed data links.
>
> "The following questions will be considered in evaluating each system:

1. Assuming that data organization affects retrieval time, is there an optimum organization? Can one organization of data satisfy the requirements for both synoptic and time-series retrieval? If so, is it a realistic one, or what compromises must be made?

2. What indexing scheme will best fit the problem, and to what extent will indexing be necessary or desirable?

3. Will it be possible to inventory, to the ultimate level, those elements available for each individual observation? If not, what compromises will allow realistic responses to inquiries without full surveys of actual data files?

4. What will be the impact of the very large volumes of data being (and to be) acquired by satellites, remote stations, etc?

5. With the almost certain advent of machine-readable recording, is it possible that some types of recording need not be routinely processed, but be inventoried and filed until needed?

6. Will the availability of high-speed graphic display and microfilm printing units in the next few years modify the concepts of an activated data base in any way?

7. Is it feasible to consider an expanded data base incorporating comprehensive world-wide coverage?

8. Will the system provide safety for the original data and, at the same time, protect the working file against deterioration through use?

9. Is the recall rate of the particular form of data sufficiently high to warrant the cost of automating its retrieval? What degree of automation is optimum for each data form?"

DATA STORAGE ORGANIZATION

The allocation of data to various levels of storage is an important consideration in data management. Level is defined as a set of properties of the storage medium and associated control system which establish the performance

of the storage device. These properties are:

- storage capacity
- access time
- serial or direct access
- on-line or off-line
- data addressing scheme
- file organization characteristics

These properties influence the amount of data that can be stored (on-line and off-line), data retrieval time, file organization strategies, input data sorting requirements, and file maintenance procedures. Given this situation, it is important in the design of the data base system to employ levels of storage which are properly matched to the requirements for frequency of access, volume of data retrieval, retrieval time, data input and output rates and selectivity of data retrival.

It is conceivable that more data may be stored in a given type of storage device than is warranted by the rate of access to the data. One could conceive of a situation where large amounts of data are stored on magnetic tape files and yet the number of requests for data from these files may average 50 to 60 per month. Occassionally there may be a request from a single user to copy the entire file. However, the normal frequency of access to the files may be low. This suggests the possibility of structuring the files so that the most frequently accessed data are stored in devices with the fastest access time and the least frequently requested data are stored in archival form, e.g., microfilm. The amount of data requested must also be taken into consideration when designing the data base system. The storage devices with the shortest access time are also the most expensive. If the amount of frequently accessed data is large, it may be necessary to limit the amount of data stored in fast access storage. This may call for the creation of summary information (e.g., climatological statistics), which

would be retrieved from fast access storage. After the retrieval of the summary data, individual data elements can be retrieved from lower levels (slower access time, greater storage capacity) of storage. Fast access storage may be limited to the storage of data directories which describe the data in the archives. An archive could consist of a variety of storage media--for example, such computer storage media as tapes and removable disk packs. Other types of archival storage could consist of machine searchable media other than computer storage (microfilm viewers and microfilm file search systems). Hard copy (computer printouts, documents, etc.) is the least automatic storage level and requires more consideration for its handling than has been tradionally provided. The storage system, then, can be viewed as a continuum of interconnected storage devices, each with its own effectiveness and cost properties, and each suitable to the storage and retrieval of data with particular file management and retrieval properties. The concept of levels of storage and a continuum of storage devices is useful for large files which cannot be entirely stored at a single or limited number of levels. Over a period of time it becomes necessary to move data from a higher level to a lower level due to the increase in storage requirements as additional data are collected and due to the loss of utility of some data relative to other types of data. In other words, all data are not of equal value in the context of the frequency of request, data quality, etc., relative to the cost of storing and maintaining these data. Using the concept of storage levels, data would be moved from higher to lower levels of storage as their utility decreased, to be replaced in more expensive storage devices by data of greater value. The end of the line of this sequence might be the National Archives, vaults within the data center, or permanent storage on microfilm. Note that in this scheme incoming data do not replace older data. This is not a last-in, last-out system. Rather, it is a revolving system whereby data may move in a circular path as a result of increase in value with time due, for example, to the emphasis on data usage in current research.

SPACE TIME CORRELATION OF DATA RETRIEVAL

If data are organized geographically, it is not easy to retrieve data for synoptic presentations because the files must be searched to locate all of the observations pertaining to a given synoptic time. Conversely, if files are organized by time of observation, it is difficult to extract time series data because the files must be searched to locate the data taken at sequential times from the same locations. This situation is illustrated as follows:

G = geographic location

T = time

Geographically organized files:

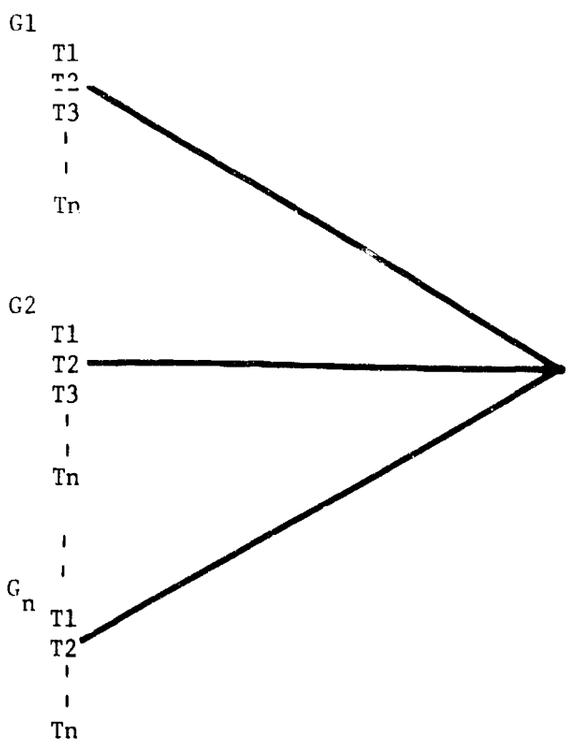

Problem: extract synoptic data for synoptic time T2 for geographic areas G1, G2 - - Gn (synoptic data).

Must search all records if data organized serially by geographic location.

Files organized by time of observation (synoptic files)

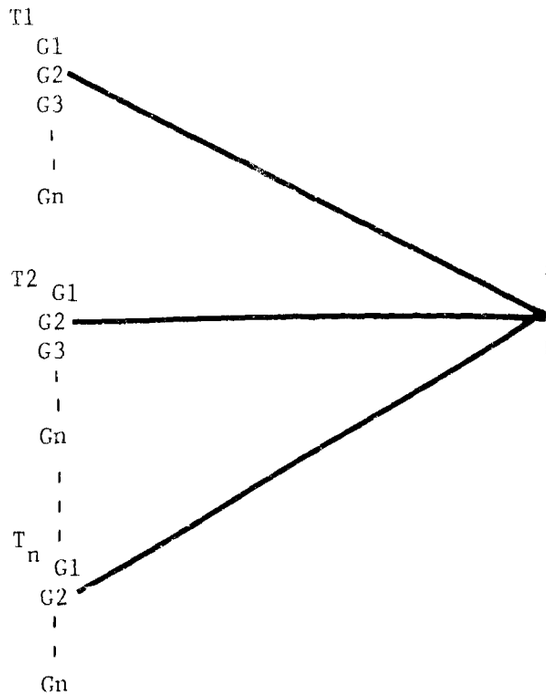

Problem: retrieve data for geographic location G2 for T1, T2 - - Tn (time series data).
Must search all records if data organized serially by observation time.

Several solutions to this problem are available:

- Maintain two data bases--one in geographic order (Marsden Square, Octant and 1° Square) and one in observation time order. If the files are large, this is an unattractive solution because of the expense of maintaining two files which contain the same data but in different sequence. If observations in a geographically ordered file are sequenced by time of observation within geographic order, time series data are obtained.

- Store all the data on direct access (disk or cartridge files) devices. This is a very attractive solution but also a very expensive one. When direct access devices are employed, the file

organization is not critical, since serial searching is not required. If serial file organization is desired, data can be stored serially on disks and retrieved by direct access.

- Provide pointers in the data records to related data in other records.
- Employ directories stored in the fastest access storage available. The directory contains information about the characteristics of the stored data.

For a marine observation file, the directory would contain the storage locations of related data elements which comprise a data set, e.g., the location of all the observations obtained at a given location (time series data) or all the storage locations of observations obtained at a given point in time (synoptic data). The locations could be machine addresses in the computer, names of computer data files and records, microfilm reel and frame number, shelf number of a storage room, etc. For data stored in the computer, the directory software could also generate or supply the machine addresses (if the data are stored on-line) where the data are stored. In this type of operation, the automated directory is always searched before the data files are searched. The directory search is performed by the computer.

THE NEED FOR ASSESSING DATA DEMAND CHARACTERISTICS

Although it is not possible to estimate with precision the future demands for data, the strategies of information retrieval should not be based on random retrieval. Even the search of so-called random access devices is organized according to a hierarchy of storage access (seek, rotate, read). If the procedure of using historical request information plus an estimate of future demand is not considered entirely satisfactory, the alternative of using zero information must be worse. It is recommended that the first data management

development task be the determination of the statistical distribution of requests for data by frequency of request, type of data requested, quantity of data requested and time limits on answering requests. Some of these statistics could be compiled by a computer program which would be written to tabulate and analyze requests for data as requests enter the computer system at NWRC. Requests which are not computer processed would also have to be analyzed. Once this information has been determined, it will be possible to allocate the appropriate amounts of direct access on-line storage, on-line tape storage, off-line tape storage, and archival storage, such as microfilm, to the marine service observation file.

Once the data have been classified according to their accessibility and storage requirements, an automated index (directory) would be designed and implemented which would provide a capability for determining the availability of data and their characteristics in the data bases prior to conducting the actual machine or manual search for the data. The index also would serve as a directory to computer storage locations and to off-line data libraries or archival storage. Thus, the index would serve to locate data, whether stored on-line or off-line. The index would also permit an appraisal to be made of the contents and characteristics of the data in order to ascertain whether the data of interest are available before committing resources to a search for the data. In addition, an examination of the index would assist the user in pinpointing his data retrieval requirements. The index would be automated in order to provide rapid access to its contents, ease of manipulation and program linkages to computer data bases.

The proposed implementation schedule for a ten-year plan of NWRC data management development is shown in Table IV-48. The ten-year TDP is shown in Table IV-49. This plan encompasses the data transmission, data processing, data base, index and data product developments suggested in the implementation schedule (Table IV-48). The ten-year cost of implementing the TDP is $21,788,000, which is about $5.5 million more than the current budget ($16,282,000). Present NWRC programs must be preserved. The TDP budget would be in addition to the cost of any programs which NWRC may initiate which are not covered in the TDP.

TABLE IV-48
ENVIRONMENTAL DATA SERVICE - NATIONAL WEATHER RECORDS CENTER
PROPOSED IMPLEMENTATION SCHEDULE
PRIORITY PRODUCTS AND DATA[1]

	FISCAL YEAR 71	72	73	74	75	76	77	78	79	80
DETERMINE THE STATISTICAL DISTRIBUTION OF REQUESTS FOR DATA BY FREQUENCY, NUMBER, DATA VOLUME AND RESPONSE TIME.										
DETERMINE TYPE AND VOLUME OF DATA WHICH SHOULD BE STORED ON EACH STORAGE MEDIUM BASED ON THE INFORMATION OBTAINED ABOVE.										
IDENTIFY DATA WHICH CAN BE MOVED FROM ACTIVE FILES TO NATIONAL ARCHIVES OR INACTIVE FILES.										
STUDY THE FEASIBILITY OF LIMITING ACTIVE MSOF COMPUTER FILES TO INDIVIDUAL PARAMETER VALUES FOR DATA WHICH WAS COLLECTED SINCE A SPECIFIED DATE AND TO SUMMARY DATA, E.G., MIN., MEAN, MAX., VALUE, FOR DATA COLLECTED ON OR BEFORE THE SPECIFIED DATE.										
DESIGN DATA AND DOCUMENTS INDEX SYSTEM FOR ALL EDS DATA. CROSS REFERENCES AMONG DATA, DOCUMENTS, SATELLITE PHOTOS AND RADAR FILMS.										
IMPLEMENT INDEX ON DIRECT ACCESS STORAGE SYSTEM.										
DESIGN ACTIVE PORTION OF MARINE SURFACE OBSERVATION FILE (MSOF) FOR DIRECT ACCESS STORAGE AND LESS ACTIVE PORTIONS FOR TAPE AND OTHER SLOWER ACCESS STORAGE MEDIA.										
DESIGN RETRIEVAL SYSTEM FOR MSOF SYNOPTIC AND TIME SERIES DATA.										
IMPLEMENT DIRECT ACCESS PORTION OF MSOF.										
IMPLEMENT SERIAL ACCESS PORTION OF MSOF.										
ESTABLISH IN-HOUSE GRAPHICS TERMINAL CAPABILITY.										
PROVIDE TELETYPE COMMUNICATION BETWEEN NWRC AND PROPOSED EIGHT REGIONAL NODC/NWRC OFFICES[1].										
PROVIDE TELETYPE COMMUNICATION WITH 14 AREA FORECAST CENTERS AND NMC.										
PROVIDE TELETYPE COMMUNICATION BETWEEN NWRC AND FNWC.										
DEVELOP REMOTE TERMINAL SOFTWARE FOR USE IN EIGHT REGIONAL NODC/NWRC OFFICES AND 14 AREA FORECAST CENTERS.										
DEVELOP SOFTWARE FOR DIGITAL COMMUNICATION WITH FNWC.										
PROVIDE DIGITAL DATA COMMUNICATION TO REMOTE TERMINALS IN EIGHT PROPOSED REGIONAL NODC/NWRC OFFICES.										
ESTABLISH INQUIRY TERMINALS AT 14 AREA FORECAST CENTERS FOR COMMUNICATION WITH NWRC.										
PROVIDE DIGITAL DATA COMMUNICATION BETWEEN NWRC AND FNWC. AUGMENT DIGITAL COMMUNICATION BETWEEN NWRC AND NODC.										
DEVELOP JOINT PROGRAM WITH NODC FOR LINKING METEOROLOGICAL AND OCEANOGRAPHIC DATA BASES.										
DEVELOP SOFTWARE FOR "MODELING" AND GRAPHICALLY PORTRAYING WORLDWIDE HEMISPHERIC AND REGIONAL WEATHER AND CLIMATIC CONDITIONS (SYNOPTIC AND TIME SERIES).										
DEVELOP JOINTLY WITH NODC SOFTWARE FOR "MODELING" AND GRAPHICALLY PORTRAYING COMBINED METEOROLOGICAL AND OCEANOGRAPHIC DATA ON WORLDWIDE, HEMISPHERIC AND REGIONAL BASIS.										
COMPILE AND ANALYZE DATA FOR COASTAL CLIMATOLOGICAL ATLASES (IN CONJUNCTION WITH CGS) AND FOR GREAT LAKES CLIMATOLOGICAL ATLASES (IN CONJUNCTION WITH LAKE SURVEY).										
DETERMINE THE FEASIBILITY OF USING WIND DATA (FROM NMC DATA BASES) FOR CALCULATING WAVE AND SWELL.										
DEVELOP DISK FILE OF THE CHARACTERISITICS OF PREVIOUS OUTPUTS, E.G., UNPUBLISHED TABULATIONS AND SUMMARIZATIONS, FOR THE PURPOSE OF REPRODUCING THE SAME OUTPUT BY COMPUTER WHEN THE SAME DATA IS REQUESTED AGAIN.										
DETERMINE FEASIBILITY OF USING SATELLITE IR AND CLOUD COVER PHOTOS AS CLIMATIC INFORMATION IN CLIMATOLOGICAL PUBLICATIONS.										
CONDUCT STUDY FOR ACQUIRING FOURTH GENERATION COMPUTER.										
SYSTEM DEVELOPMENT AND PROGRAMMING FOR FOURTH GENERATION COMPUTER.										
INSTALL FOURTH GENERATION COMPUTER.										

1 To be located near eight major universities.

* Climatological publications and marine surface observations, potential new product: use of historical series of satellite IR and cloud cover photos as climatological information.

TABLE IV-49

TECHNICAL DEVELOPMENT PLAN SPECIFICATION - ENVIRONMENTAL DATA SERVICE
NATIONAL RECORDS CENTER - PRIORITY PRODUCTS AND DATA

FISCAL YEAR	EQUIPMENT REQUIREMENTS	EQUIPMENT COSTS (MILLIONS)	NUMBER OF ADDITIONAL ANALYSTS/SOFTWARE SPECIALISTS AND FIELD LIAISON PERSONNEL	ADDITIONAL PERSONNEL COSTS (MILLIONS)	EXISTING NWRC BUDGET (MILLIONS)	TOTAL ANNUAL BUDGET (MILLIONS)
71			3	$ .045	$ 1.294[f]	$ 1.339
72			4	.060	1.359	1.439
73			12	.180	1.427	1.607
74	TELETYPES AND DIAL UP LINES	$.171[a]	30[e]	.450	1.498	2.119
75		.171[a]	36[e]	.540	1.573	2.284
76	DATA COMMUNICATION TERMINALS AND CONTROLS OFF-LINE MAGNETIC TAPE TO MAGNETIC DATA TRANSMISSION PRIVATE LINE CHARGES FOR TAPE TO TAPE TRANSMISSION	.171[a] .067[b] .140[c] .012[d]	36[e]	.540	1.652	2.582
77	INSTALL NEW COMPUTER	.171[a] .012[d] 1.000	30[e]	.405	1.735	3.323
78		.171[a] .012[d]	21[e]	.315	1.822	2.320
79		.171[a] .012[d]	16[e]	.240	1.913	2.336
80		.171[a] .012[d]	16[e]	.240	2.009	2.432
TEN YEAR TOTALS (MILLIONS)		$2.464		$3.015	$16.282	$21.761

a. Lease charges for teletype communication between NWRC and eight NODC/NWRC offices, between NWRC and 12 Weather Bureau offices (50% charged to NWRC), and between NWRC and FNWC (50% charged to NWRC), teletypes, data sets and dial up line charges.

b. Purchase of data transmission control and communication terminals for remote query of NWRC data bases from eight NODC/NWRC offices and from 12 Weather Bureau offices.

c. Purchase of magnetic tape data transmission equipment for transmitting data, tape to tape, over telephone lines between FNWC and NWRC and between NODC and NWRC. Also includes cost of communication terminal for remote query of NODC data bases.

d. Private line lease charges for transmission of data, tape to tape, between FNWC and NWRC and between NODC and NWRC (50% charged to NWRC).

e. Includes one liaison representative for each of four NODC/NWRC offices, starting in FY 74.

f. FY 69 NWRC budget = $1.173 million (including Navy Transfer Funds). 5% per year increase in "normal budget" assumed, $1.294 million for FY 71.

SMITHSONIAN OCEANOGRAPHIC SORTING CENTER (SOSC)

Much attention has been devoted to the collection, analysis and dissemination of marine environmental data by the marine community. In contrast, relatively little concern has been evidenced by the marine community for the need to preserve, identify, classify, and describe marine samples and specimens. Accordingly, there has been a lack of interest in the development and implementation of information systems for supporting the work of systematics. However, the activity of SOSC and its information system and data base should be viewed in the broader context of a national biological and geological information resource which has applications broader in scope than the interests of the approximately 250 specialists who receive the specimens.

The elements of the current information system are:

- Specimen labeling by typewriters which produce paper tape as a by-product for computer entry.
- Inventory of samples file and sample directories.
- Sample collection information file and directories pertaining to methods of sample collection, program, collector, vessel, cruise and sample number.
- Preparation of shipping lists and invoices for distribution of specimens to specialists.
- Taxa catalog which supports all other parts of the system for specimen identification and for directory printing.
- Location control of specimens once they leave SOSC.

To date, the primary emphasis has been placed on those aspects of the system pertaining to the creation of specimen labels, recording and retrieving information on the movement of specimens after they leave SOSC, recording and retrieving the identification of specimens, recording and retrieving collection information, generation of taxa names for use by the sorting section in classifying specimens, and the maintenance of the taxa catalog with changes from the Sorting Section. The emphasis in the early stage of the system's development has been on building the data base and providing specimen inventory control. Increases in scientific and information processing resources are required in order to develop a generalized information storage and retrieval system which would be of value in biological research in addition to its application to specimen inventory control. Some of the features of the TDP for achieving this goal are the following:

- An increase in the number of biologists, geologists, and information system personnel for the purpose of performing research on SOSC information and specimens. Illustrative of this type of analysis is the request from the Navy for the ocean distribution of bioluminescence. This example clearly distinguishes the broader role that SOSC can play, based on its physical resources of specimens and information base of specimen descriptions, from the more routine activities of specimen labeling, shipment and inventory control. It also indicates that non-SOSC researchers can employ the specimen information resource for more than the classification of specimens.

- The correlation of collection-information, sample inventory information and identified specimen information which will provide an integrated information base for the purpose of answering requests of increasing complexity. For example, questions relating to the determination of the existence of a given species in a given geographic area, the methods of sample collection, time of collection and identification activities by specialists can be more easily accomplished when all the information pertaining to a specimen is recorded as a "package" in the information base.

- The implementation of an information storage and retrieval language with greater capability for generalized file management and data retrieval than is permitted with the COBOL language presently in use.

  In addition, if SOSC expands its capabilities to include on-line interactive retrieval of data, the use of COBOL would be infeasible because of the requirement to compile information requests from source language to object code for each information request. The time required for these compilations would be intolerable for interactive console work.

  The development of an integrated information system for marine samples and specimens which will provide linkages, or cross references, among specimens, environmental data associated with the specimens (temperature, salinity, depth, dissolved oxygen, etc., in the area from which the specimen was obtained) and the research publications in which the specimens were utilized.

- The participation of SOSC with NODC and NWRC in the operation of eight regional offices associated with eight major institutions (these are named in the Executive Summary) for the purpose of bringing users and potential users in more direct contact with SOSC services by providing SOSC liaison representatives in the field. The purpose of the field office activity is to (1) assist the user in better utilizing SOSC services, (2) assist SOSC in obtaining more specimens and specimen descriptions from institutions and others in the field, and (3) eventually to provide a remote inquiry to SOSC information bases from field locations.

- Development of in-house and remote interactive terminal software.

- Development of software for data communication from remote terminals and the acquisition of communications terminal equipment for interfacing communication lines with the Smithsonian computer.

- Compression of data bases by methods to be described in order to save file management and retrieval time. This will be of increasing importance as the information base expands.

- A provision for making an analysis (albeit difficult) of the demand--present and future--for SOSC specimen information and the use of this information for allocating the storage of information to various levels of storage. It is clear that it is not feasible to store information about the 50 million Smithsonian specimens on direct access equipment. This would require about 5 billion characters of storage.

- The storage of the more frequently demanded information on direct access (disk) equipment and the software development and acquisition of equipment for direct access storage.

Although it has been previously determined by the Smithsonian Institution that numeric coding schemes for taxa are not feasible, it appears that these recommendations pertain to the use of the code external to the computer system. We agree that forcing the user to employ numeric codes for either input to, or output from, the SOSC system would impose a burden on the user which would seriously impair the system's utility. However, it appears that substantial savings in file processing and retrieval times could be accomplished by the employment of numeric coding of taxa names and hierarchial relationships among taxa internal to the computer system. Specifically, data bases which contain taxa and taxonomic relationships could consist of binary coding of the alphabetic data. The primary purpose of this scheme is to reduce file processing time of serially organized data which appear in the data bases by substantially reducing the file lengths through data compression. A reduction in the amount of storage required on tape or disk is also achieved; however, this is a secondary consideration. The scheme is achieved by employing several techniques. These are:

- Numeric coding of hierarchical relationships among taxa.
- Numeric coding of taxa name.
- Avoidance of recording frequently used names which have been defined, by referring to line numbers where taxa names have been previously defined.

The above is implemented by employing numeric identifiers of taxa names. The numeric identifiers are machine addresses of disk or mass core storage. The contents of the machine locations are the complete binary coded representations of taxa names. The complete taxa names are stored only once in a single table and are not repeated. When new taxa names enter the system, a machine address is computed and the complete BCD representation is stored. All data base representations of the taxa names and hierarchy are converted to the numeric coding scheme referred to above. When data are produced in the form of reports

for the user, numeric coding of data base information is associated with the BCD recording of taxa names in the taxa table in order to obtain the alphabetic data for printing. Similarly, the use of this technique permits all data to be entered in normal alphanumeric format because computer programs handle the data converstion of external data to internal data representation.

The information coding scheme is illustrated in Tables IV-50 and IV-51. Table IV-50 shows a numeric scheme for coding hierarchical relationships among taxa names and Table IV-51 shows the complete numeric coding scheme for the example of Table IV-50. Table IV-51 contains binary codes for indicating hierarchy, old names (previously defined names), new names (names not previously defined), taxa names, single or paired names, and paired old or new names. In this illustration, a data compression of 64 percent is achieved. It is recommended that this scheme or a similar scheme be given consideration for coding SOSC data bases.

The proposed time-phased plan for SOSC information management activities is shown in Table IV-52. The contents of this plan have been described previously. The TDP specification for a 10-year plan of SOSC information management development is shown in Table IV-53. This plan contains elements for discipline personnel, information systems and programming personnel, technical level sorting personnel, and equipment acquisition. Costs in addition to the "normal budget" are indicated. A 10-year extrapolation of the existing budget is also shown. New costs are added to the extrapolated existing budget in order to obtain total yearly budgets and a 10-year total budget required to implement the TDP. The 10-year total budget corresponding to this TDP is $6.611 million which is double the "normal" 10-year budget of $3.314 million.

TABLE IV-50
A METHOD OF TAXA HIERARCHY CODING

1	00 Protozoa
2	01 Protozoa-Parasitic
3	00 Protozoa-Epizoic
4	00 Flagellata
5	01 Chysomonadina
6	01 Coccolithophoridae
7	10 Cryptomonadina
8	00 Dinoflagellata
9	01 Dinoflagellata-Parasitic
10	10 Rhizopoda
11	01 Amoebozoa
12	00 Foraminifera
13	01 Foraminifera-Benthic
14	00 Foraminifera-Pelagic
15	10 Heliozoa
16	00 Radiolaria
17	10 Sporazoa
18	00 Ciliata
19	10 Porifera
20	01 Porifera-Larvae
21	00 Calcarea
22	01 Homocoela
23	00 Heterocoela
24	10 Hexactinellida

00 = Original position or no change
01 = Change to the right
10 = Change to the left

TABLE IV-51
SMITHSONIAN OCEANOGRAPHIC SORTING CENTER - A METHOD
OF TAXA CATALOG DATA BASE CODING[1]

LINE NUMBER	HIERARCHY CODE	OLD NAME (0) NEW NAME (1) CODE	FIRST TAXA NAME IDENTIFICATION	UNPAIRED (0) PAIRED (1) NAME CODE	PAIRED NAME CODE OLD NAME (0) NEW NAME (1)	SECOND TAXA NAME IDENTIFICATION	NUMBER OF BITS REQUIRED
00001	00	1	XXXXXXXXXXXXXXXXX	0			26
00010	01	0	000010**	1	1	XXXXXXXXXXXXXXXXX	33
00011	00	0	000010**	1	1	XXXXXXXXXXXXXXXXX	33
00100	00	1	XXXXXXXXXXXXXXXXX	0			32
00101	01	1	XXXXXXXXXXXXXXXXX	0			32
00110	01	1	XXXXXXXXXXXXXXXXX	0			32
00111	10	0	001010**	0			15
01000	00	1	XXXXXXXXXXXXXXXXX	0			26
01001	01	0	010000**	1	0	000101**	22
01010	10	1	XXXXXXXXXXXXXXXXX	0			26
01011	01	1	XXXXXXXXXXXXXXXXX	0			26
01100	00	1	XXXXXXXXXXXXXXXXX	0			26
01101	01	0	011000**	1	1	XXXXXXXXXXXXXXXXX	33
01110	00	0	011000**	1	1	XXXXXXXXXXXXXXXXX	33
01111	10	1	XXXXXXXXXXXXXXXXX	0			26
10000	00	1	XXXXXXXXXXXXXXXXX	0			26
10001	10	1	XXXXXXXXXXXXXXXXX	0			26
10010	00	1	XXXXXXXXXXXXXXXXX	0			26
10011	10	1	XXXXXXXXXXXXXXXXX	0			26
10100	01	0	100110**	1	1	XXXXXXXXXXXXXXXXX	33
10101	00	1	XXXXXXXXXXXXXXXXX	0			26
10110	01	1	XXXXXXXXXXXXXXXXX	0			26
10111	00	1	XXXXXXXXXXXXXXXXX	0			26
11000	10	1	XXXXXXXXXXXXXXXXX	0			26
						TOTAL BITS REQUIRED	662

TOTAL BITS REQUIRED FOR ALPHANUMERIC CODING = 308 ALPHA CHARACTERS X 6 BITS = 1848 + 24 X 2 BITS FOR HIERARCHY INFORMATION = 1896 BITS.

NUMERIC CODING = $\frac{662}{1848}$ X 100 = 36% OF STORAGE SPACE OF ALPHANUMERIC CODING.

* Line number reference of previously defined name.

** 0 refers to first or only name. 1 refers to second name. X's refer to names which have to be supplied for first time from computer stored table. 100,000 names assumed (7 bits).

[1]Corresponding to Taxa List in Table IV-51.

TABLE IV-52

SMITHSONIAN OCEANOGRAPHIC SORTING CENTER - PROPOSED IMPLEMENTATION SCHEDULE

	FISCAL YEAR									
	71	72	73	74	75	76	77	78	79	80
CONTINUATION OF DIGITIZATION OF SPECIMEN DESCRIPTIONS										
CONTINUE CORRELATION OF SAMPLE AND SPECIMEN DATA DESCRIPTIONS BY EXPEDITION AND TIME, PLACE AND METHOD OF COLLECTION AND SPECIALIST.										
COMPRESSION OF DATA BASES. EMPLOYMENT OF ADDITIONAL NUMERICAL CODING METHODS INTERNAL TO DATA PROCESSING SYSTEM[1].										
PERFORM STUDY TO SELECT INFORMATION STORAGE AND RETRIEVAL (ISR) LANGUAGE[2].										
MAKE ANALYSIS OF THE DEMAND FOR SAMPLE-SPECIMEN DATA.										
ACQUIRE ADDITIONAL SYSTEMS ANALYSTS AND DATA PROCESSING PERSONNEL.										
AUGMENTATION OF PERSONNEL FOR BIOLOGICAL AND GEOLOGICAL DATA REQUEST ANALYSIS.										
IMPLEMENTATION OF INFORMATION STORAGE AND RETRIEVAL LANGUAGE.										
BEGIN OPERATION AS BIOLOGICAL-GEOLOGICAL ANALYSIS CENTER					△					
IMPLEMENT MORE ACTIVE PORTIONS OF DATA BASE ON DIRECT ACCESS EQUIPMENT										
CONSOLIDATE COLLECTION DATA FILE, INVENTORY OF SAMPLES FILE, IDENTIFIED SPECIMEN FILE INTO SINGLE FILE										
ACQUIRE DIRECT ACCESS EQUIPMENT				△						

[1] Explained in text

[2] For replacement of COBOL

TABLE IV-52 (CONT'D)

SMITHSONIAN OCEANOGRAPHIC SORTING CENTER
PROPOSED IMPLEMENTATION SCHEDULE

	FISCAL YEAR									
	71	72	73	74	75	76	77	78	79	80
PERFORM STUDY TO DEVELOP INFORMATION LINKAGES AMONG SAMPLES AND SPECIMENS AND ENVIRONMENTAL DATA AND RESEARCH PUBLICATION BIBLIOGRAPHIES[3].										
IMPLEMENT SAMPLE-SPECIMEN-ENVIRONMENTAL DATA-BIBLIOGRAPHIC DIRECTORY (PROVIDE REFERENCES TO NAMDI AND BIBLIOGRAPHIC INDICES AND ABSTRACTS)[3]										
DEVELOP SOFTWARE FOR IN-HOUSE INTERACTIVE TERMINAL OPERATION										
DEVELOP SOFTWARE FOR REMOTE INTERACTIVE TERMINAL OPERATION[4]										
DEVELOP SOFTWARE FOR REMOTE DATA COMMUNICATION										
ACQUIRE COMMUNICATIONS TERMINAL EQUIPMENT										
PROVIDE FIELD REPRESENTATIVES TO NODC/NWRC REGIONAL OFFICES										
NODC/NWRC OFFICES BECOME NODC/NWRC/SOSC OFFICES								△		
PROVIDE REMOTE INQUIRY SERVICE TO REGIONAL OFFICES OFFICES								△		

[3] Between SOSC samples and specimens and NODC environmental data and between SOSC samples and specimens and research publications of scientists in institutions (including Smithsonian)

[4] Terminals in eight Regional NODC/NWRC Offices

TABLE IV-53
TECHNICAL DEVELOPMENT PLAN SPECIFICATION - SMITHSONIAN OCEANOGRAPHIC SORTING CENTER

FY	NEW EQUIPMENT REQUIREMENTS	NEW EQUIPMENT COSTS (MILLIONS)	NUMBER OF ADDITIONAL DISCIPLINE PERSONNEL*	NUMBER OF ADDITIONAL ANALYSTS/ SOFTWARE PERSONNEL*	NUMBER OF ADDITIONAL TECHNICIAN SORTING PERSONNEL*	ADDITIONAL PERSONNEL COSTS (MILLIONS)	EXISTING SOSC BUDGET (MILLIONS)	TOTAL ANNUAL BUDGET (MILLIONS)
71					12	$.120[5]	[illegible].263	$.383
72				7	13	.235	.276	.511
73			4[illegible]	7	14	.245	.290	.535
74	DIRECT ACCESS STORAGE EQUIPMENT (500M DECIMAL DIGIT UNITS)	[illegible]	4[illegible]	5	15	.225	.305	.780
75				20	17	.470	.320	.790
76				12	19	.370	.336	.706
77	COMMUNICATIONS TERMINAL EQUIPMENT	[illegible]	[illegible]	8	21	.330	.353	.750
78				7	23	.335	.371	.706
79				4	25	.310	.390	.700
80				4	28	.340	.410	.750
TEN YEAR TOTALS		$.317				$2.980	$3.314	$6.611

[illegible] Biologists and geologists

[illegible] Purchase of data transmission control and communication terminals for remote query of SOSC data bases from eight NODC/NGRL/SOSC offices

[illegible] Four representatives to cover eight regions

* In addition to present personnel

[illegible] Discipline and analyst personnel priced @ $15,000 per annum; technician personnel priced @ $10,000 per annum

V. MARINE DATA NETWORK DEVELOPMENT PLANS

The Need and Mechanism for Coordination

Implementation of the recommended National Marine Data Program will directly support and contribute to the attainment of the broad objectives of the 1966 Marine Resources and Engineering Development Act; namely,

- the accelerated development of the resources of the marine environment;
- the expansion of human knowledge of the marine environment;
- the encouragement of private investment enterprise in exploration, technological development, marine commerce, and economic utilization of the resources of the marine environment;
- the preservation of the role of the U. S. as a leader in marine science and resources development;
- the advancement of education and training in marine science;
- the development and improvement of the capabilities, performances, and efficiency of vehicles, equipment, and requirements or use in exploration, research, surveys, the recovery of resources and the transmission of energy in the marine environment;
- the effective utilization of the scientific and engineering resources of the nation, with close cooperation among all interested agencies, public and private, in order to avoid unnecessary duplication of effort, facilities, and equipment, or waste;
- the cooperation by the U.S. with other nations and groups of nations and international organizations in marine science activities when such cooperation is in the national interest.

The complexities associated with building and maintaining a coordinated national marine data network are better understood by inspecting some of the essentially non-technical aspects of the total marine science program. They include:

-- the Federal portion of the national program spreads over eight presently identified Federal departments with major marine interests and within some subordinate agencies. Organization and coordination of the marine activities of these departments and agencies alone is a major problem demanding immediate attention;

-- in addition to the Federal Government, 30 coastal and Great Lakes State governments not only have serious marine problems such as environmental pollution, but also have very substantial state revenue potential from food, mineral and petroleum resources of the marine extension of their state boundaries;

-- the oneness of the world ocean and its effects on global weather and ocean operations, the concept of freedom of the seas, and the great gaps in national and international law as to rights and ownership of marine resources create a requirement for international cooperation in ocean development as great and pressing as has ever been faced by an expanding technology. The opportunities and advantages of international cooperation in data collection and data exchange are most attractive and must be expanded.

-- industry has a substantial and growing profit motive in exploiting marine resources as well as participating in Federal and State programs. Associated with industry data systems, however, are proprietary and classification safeguards as stringent as their counterparts in national security. Industry must be viewed as a partner, not a subordinate in the ocean program;

-- the multiplicity of forms in which the significant raw data occurs are as numerous and varied as the interests of the various national programs and the pure and applied scientific disciplines involved in

gathering and using the data to develop required knowledge and understanding.

These, then, are the complicating socio-economic political aspects of an already complicated technical information management program. Because of the breadth and dimensions of the subject matter, the magnitude of the data problem is correspondingly quite large. The data problem is intimately associated with every aspect of the marine sciences. Therefore, any program undertaken to satisfy the missions of organizations in the marine sciences generates data requirements to support those missions. Thus, data programs must flow from the functional requirements of the marine science community and not dictate the direction which the functional activities take.

Although a loosely structured marine data management system exists today, it evolved without planning. For the most part, it developed in response to requirements for collecting, processing, and exchanging data that were largely unrelated and isolated. Modern technology makes it possible to acquire large amounts of data in a very short time, but prospects are dim for effective use of this mass of data with the present data management system. The data problem and associated costs thus become more serious as data traffic increases, more variables are measured, and must be interrelated and coordinated faster, and the data commodity must be shared with a broader, more diversified clientele. This is compounded by the ever-increasing importance of international exchange of data.

Experience has demonstrated that among the factors involved in implementing improvements to an information processing system as complex as the national marine data management network, effective coordination of the many activities is critical. The coordination, in this context, is the technical management and design and control that ensure that implementation schedules are appropriately phased and that resultant operations do indeed fulfill the objectives for which they were intended.

To achieve the degree of coordination required, a mechanism must be established which would be responsive to both the day-to-day and long-range planning operations. During the course of the study, the contractor found it invaluable to have one central office--the Marine Science Council--with which planning and policy formulation could be conducted, and the Data Management Advisory Panel (DMAP), made up of professional and scientific representatives from the major government agencies involved in marine sciences, with whom to review the technical problems which arose during the study.

It is therefore recommended that one office be designated for cognizance of policies applicable to marine data management activities, and; second, that an Advisory Committee, representing the professional and scientific disciplines with representatives from Federal and State governments, industry and the academic communities, be continued on a permanent basis. Chairmanship of this committee need not devolve upon the council, but the committee should be available to the council for consideration of problems and progress in marine data management.

Specific suggested responsibilities for the first office should include the following major areas of responsibility:

- monitoring implementation of marine data program improvements to compare the results with objectives.
- expediting availability of relevant data program information to the affected marine community including proprietary, classified, and other marine data.
- forecasting data program requirements.
- assessing the routing of data among marine data acquisition, processing, and dissemination agencies and the distribution of workloads among the various marine data facilities.
- updating the Technical Development Plan for the national marine data management program to ensure its currency with events.

-- coordinating marine data and product service operations involving multiple agencies.
-- fostering flow of marine data to and among national centers.
-- improving interagency compatibility.
-- reducing redundancies in marine data holdings, product generation, and service operations.
-- facilitating marine data and product inventories and accountability.

It is suggested that the appropriate designation of the first office be within the Executive Office of the President, more particularly in the Marine Science Council, unless and until a new office or agency is formed for the purpose of coordinating national marine science activities.

Based upon the nature and scope of these activities, this proposed national coordinating mechanism for marine data management programs should have the capability for providing in an ongoing manner the information necessary for national level:

-- policy planning
-- program planning
-- fiscal planning
-- decision making
-- progress monitoring

Specific responsibilities of the Advisory Committee would be those of technical review of progress and agreement on solutions to problems that arise in implementation of improved data management programs. For example, establishment of standards for quality control in collection of marine data, standards for compatibility of formats in data modification and inventory control, scales for map and chart production, new marine data product specifications, and means for achieving real-time linkages among computer based files of marine data, would be appropriate for this Committee.

(Page 2 blank)

APPENDIX

TECHNICAL DEVELOPMENT PLAN - MAJOR MILESTONE SCHEDULE

APPENDIX

TECHNICAL DEVELOPMENT PLAN - MAJOR MILESTONE SCHEDULE

PROGRAM AND AGENCY	ACTIVITY	FISCAL YEAR START	FISCAL YEAR FINISH
GREAT LAKES AND COASTAL DEVELOPMENT			
Lake Survey and Great Lakes Data Center	• Increase Recreational Chart Coverage	71	80
	• Develop Ice Atlas, Charts and Data Base	72	74
	• Develop Wave Charts and Data Base	74	77
	• Develop Surface Currents Charts and Data Base	74	77
	• Develop Bathymetric Maps and Data Base	76	78
	(1)* • Develop Climatological Atlas	79	80
Coastal Engineering Research Center	(2) • Develop Coastal Wave Gauge Network	71	76
	(5) • Provide Input for Ocean Engineering Reports	75	76
MAPPING CHARTING AND MARINE ENVIRONMENT DESCRIPTION			
Naval Oceanographic Office	• Install Shipboard Computers and Instrumentation	71	80
	• Improve Navigation Products	71	80
	• Increase Nautical Chart and Bathymetric Map Coverage	71	80
	(3) • Improve Bathymetric and Geophysical Data Indexing Systems	71	72
	(4) • Expand Automation of Atlas, Chart and Map Production	71	74
	(5) • Produce Ocean Engineering Handbook and Reports	73	74
Coast and Geodetic Survey	• Improve Navigation Products	71	80
	• Increase Nautical Chart and Bathymetric Map Coverage	71	80
	• Install shipboard computers and instrumentation	71	78
	(4) • Expand Automation of Chart and Map Production	71	74

*These numbers identify joint agency activities.

APPENDIX (CONT'D)

PROGRAM AND AGENCY	ACTIVITY	FISCAL YEAR START	FISCAL YEAR FINISH
U.S. Geological Survey	(3)* • Improve Bathymetric and Geophysical Data Index Systems	71	72
	(15) • Produce Coastal Atlas and Sea Level Variation Charts	73	74
	(6) • Develop Directory of Geological Products	71	71
	(6) • Develop Geological Data and Product Descriptor Files and Ship Track Maps	71	75
	(5) • Provide Input for Ocean Engineering Reports	73	75
	• Establish Clearinghouse for Industry Data	76	76
	(6) • Develop Industry Data Availability Files	77	77
MARINE FORECASTING RESEARCH AND SUPPORT			
Weather Bureau Offices	(2) • Develop Coastal Wave Gauge	71	76
	• Augment Teletypewriter C Network	71	80
	• Install Data Processing Systems	72	76
	• Develop Coastal Surface Meteorological Data Acquisition System	73	74
Fleet Numerical Weather Central (NWSC) and National Meterological Center (ESSA)	• Expand Aircraft and Ship Data Acquisition Program		
	• Implement Digitization Program for Temperature, Surface Meteorological Data and Sea State	71	80
		71	80
National Environmental Satellite Center	• Develop Combined Satellite-Meteorological Data Products	71	72
	(7) • Develop Satellite Product Descriptor File System	71	71
	• Link NESC and NMC Data Bases	72	72
	• Develop Computer Graphics Software for Weather Analysis and Production of Satellite Products	73	76

*These numbers identify joint agency activities.

APPENDIX (CONT'D)

PROGRAM AND AGENCY		ACTIVITY	FISCAL YEAR START	FISCAL YEAR FINISH
FISHERIES				
Bureau of Commercial Fisheries and Bureau of Sport Fisheries and Wildlife		• Improve Fishery Forecasting and Descriptive Products	71	80
		• Install Regional Data Processing Systems	72	55
		• Develop National Fisheries Data System	73	77
WATER QUALITY				
Federal Water Pollution Control Administration		• Implement Improved STORET Data Management System	71	74
		• Develop Remote Inquiry System for STORET	73	77
		• Implement Automated Water Quality Data Acquisition and Processing System	75	77
		• Develop Water Quality Models for STORET	77	80
ONSHORE BUOY DATA MANAGEMENT				
U.S. Coast Guard		• Development Shore Data Processing Software	71	72
	(8)*	• Establish Shore Processing Centers (Mod 0)	71	74
	(8)	• Expand Shore Processing Centers (Mod 1)	74	76
NATIONAL DATA CENTERS				
National Oceanographic Data Center	(6,7, 8)	• Develop Master Marine Data Directory (Expanded NAMDI)	71	73
		• Restructure Data Bases	71	73
		• Acquire Data for New Data Bases	73	74
	(5)	• Develop Ocean Engineering Data Reference Files	73	76
	(9)	• Open Regional Offices	74	74
	(10)	• Provide Teletype Communication with Regional Offices	74	74
		• Develop Graphic Terminal Capability	74	75
	(11)	• Provide Remote Query of Data Bases from Regional Offices and NWRC	75	76
	(8)	• Plan for Buoy Data Acquisition	75	75
	(10)	• Provide Digital Communication with FNWC and NWRC	76	76
	(13)	• Develop Ocean Models	77	80

*These numbers identify joint agency activities.

APPENDIX (CONT'D)

PROGRAM AND AGENCY		ACTIVITY	FISCAL YEAR START	FISCAL YEAR FINISH
National Weather Records Center		• Restructure Data Bases	71	74
	(14)	• Develop Automated MSOF Index	71	73
	(15)(1)	• Contribute to Development of Coastal and Climatological Atlases	73	80
		• Develop Retrieval Capability for Synoptic and Time Series Data	73	73
	(10)	• Provide Teletype Communication with Regional Offices	74	74
	(11)	• Provide Remote Query of Data Bases from Regional and Weather Bureau Offices	74	75
		• Provide Teletype Communication with WB Offices	74	74
		• Provide Graphics Terminal Capability	74	75
	(11)	• Provide Remote Query of Data Base from NODC	75	76
	(7)	• Contribute to Development of Satellite Climatological Products	75	76
	(8)	• Plan for Buoy Data Acquisition	75	75
	(12)	• Provide Digital Communication with FNWC and NODC	76	76
	(13)	• Develop Ocean-Atmosphere Models	77	80
Smithsonian Oceanographic Sorting Center		• Implement Information Storage and Retrieval Language	73	73
	(14)	• Develop Sample-Data-Bibliographic Directory	74	78
		• Consolidate Data Base	75	75
		• Implement Interactive Terminal Operation	75	75
		• Implement Portion of Data Base on Direct Access Storage	75	75
	(11)	• Provide Remote Query of Data Base from Regional Offices	76	78

*These numbers identify joint agency activities.

UNC.

Security Classification

DOCUMENT CONTROL DATA - R & D

(Security classification of title, body of abstract and indexing annotation must be entered when the overall report is classified)

1. ORIGINATING ACTIVITY *(Corporate author)* System Development Corporation Santa Monica, California	2a. REPORT SECURITY CLASSIFICATION Unclassified 2b. GROUP

3. REPORT TITLE

VOLUME TWO TECHNICAL DEVELOPMENT PLAN NATIONAL DATA PROGRAM FOR THE MARINE ENVIRONMENT

4. DESCRIPTIVE NOTES *(Type of report and inclusive dates)*

5. AUTHOR(S) *(First name, middle initial, last name)*

6. REPORT DATE 31 July 1969	7a. TOTAL NO. OF PAGES 209	7b. NO. OF REFS
8a. CONTRACT OR GRANT NO. N00014-67-C-0559 b. PROJECT NO. c. d.	9a. ORIGINATOR'S REPORT NUMBER(S) TM-4023/006/00 9b. OTHER REPORT NO(S) *(Any other numbers that may be assigned this report)*	

10. DISTRIBUTION STATEMENT

Distribution of this document is unlimited

11. SUPPLEMENTARY NOTES	12. SPONSORING MILITARY ACTIVITY

13. ABSTRACT

Reports on a study made by System Development Corporation to assist in the expansion of marine science and ocean related activities.

The report is in two volumes. Volume I: National Data Program for the Marine Environment (TM-4023/005/00) and Volume II: Technical Development Plan for the Marine Environment (TM-4023/006/00).

DD FORM 1 NOV 65 1473

Unclassified

Security Classification

Unclassified
Security Classification

14 KEY WORDS	LINK A ROLE	LINK A WT	LINK B ROLE	LINK B WT	LINK C ROLE	LINK C WT
Marine environment						
Marine data management						
Marine data network						
Geographic coverage						
Weather observations						
Marine science						
Oceanography						

Unclassified
Security Classification