AD 694434

AD

TECHNICAL REPORT NO. 10590

DIFFERENTIAL MEASUREMENTS OF FAST-NEUTRON AIR-GROUND INTERFACE EFFECTS; PROJECT 9.2 OPERATION HENRE

U.S. ARMY TANK AUTOMOTIVE COMMAND LABORATORIES

15 July 1969

by R. L. French and L. G. Mooney

RADIATION RESEARCH ASSOCIATES, INC.
Fort Worth, Texas

Contract No. DA-20-113-AMC-06121(T)

TACOM

PHYSICAL SCIENCE LABORATORY

U.S. ARMY TANK AUTOMOTIVE COMMAND Warren, Michigan

Distribution of This Document is Unlimited

36

Technical Report No. 10590
RRA-T95

DIFFERENTIAL MEASUREMENTS OF FAST-NEUTRON AIR-GROUND INTERFACE EFFECTS; PROJECT 9.2 OPERATION HENRE

by

R. L. French and L. G. Mooney

RADIATION RESEARCH ASSOCIATES, INC.
3550 Hulen Street
Fort Worth, Texas 76107

15 July 1969

Work performed under Contract No. DA-20-113-AMC-06121(T)
under the technical supervision of the
Nucleonics Section, Physical Science Laboratory
United States Army Tank Automotive Command, Warren, Michigan
AMC Management Structure Code 5543.12.282.06.01
Department of Army Project No. 1X542706D372

TACOM
Physical Science Laboratory
U.S. Army Tank Automotive Command
Warren, Michigan

Distribution of this Document is Unlimited

ABSTRACT

The effect of the air-ground interface on the scattered fast-neutron dose near the ground was measured at a distance of 1000 ft from a 14-MeV neutron source. The source was the HENRE accelerator operated at a height of 112 ft on the BREN tower at the Nevada Test Site. A horizontal slab of polyethylene 1 ft thick and 5 ft square with Hurst-type fast-neutron dosimeters mounted on its upper and lower surfaces, separated the neutrons arriving through the upper 2π solid angle from those from the lower 2π. A third detector, mounted on a boom, measured the free-field. The entire assembly was suspended by a hoist system to make measurements at 0.75 to 70 ft above the ground. The scattered dose at the top detector was essentially constant, that at the bottom detector increased by a factor of approximately 2 between 0.75 and 70 ft, and the free-field dose increased by less than 25% over the same height range. The experiment provided confirmation, both qualitative and quantitative, of the "first-last collision model" of the air-ground interface effect.

PREFACE

Operation HENRE (High Energy Neutron Reactions Experiment) consisted of several programs of basic and applied radiation experiments that utilized 14-MeV neutrons from a high intensity accelerator mounted on the 1527-ft BREN tower at the Nevada Test Site. The operation was a joint effort of the U. S. Atomic Energy Commission and the Defense Atomic Support Agency.

Program 9 of Operation HENRE was conducted to confirm design methods and techniques to be used in the development of radiological armor for the United States/Federal Republic of Germany Joint Main Battle Tank Program. Radiation Research Associates, under contract with the Nucleonics Section, Physical Science Laboratory, U. S. Army Tank Automotive Command, Warren, Michigan, was responsible for Project 9.2, which involved differential measurements of the effect of the air-ground interface on the fast-neutron dose at large distances from the source.

Because of the large scope of Operation HENRE, more organizations and individuals contributed either directly or indirectly to the success of Project 9.2 than can be specifically acknowledged here. However, mention must be made of the assistance of General Dynamics/Fort Worth in providing hardware and instrumentation support. Personnel of the GD/FW nuclear shielding group and the U. S. Army Tank Automotive Command assisted in the experimental setup and data acquisition. A special acknowledgement is due B. O. McCauley of GD/FW, who served as the program director of Program 9 of Operation HENRE.

TABLE OF CONTENTS

		Page
	ABSTRACT	iii
	PREFACE	iv
	LIST OF FIGURES	vi
	LIST OF TABLES	vi
I.	INTRODUCTION	1
II.	THEORETICAL MODEL	2
III.	EXPERIMENT	8
IV.	ANALYSIS	20
V.	CONCLUSIONS	26
	REFERENCES	27
	APPENDIX	28

LIST OF FIGURES

Figure		Page
1.	Geometry for Calculation of Last-Collision Fraction	4
2.	Field Layout of Project 9.2	9
3.	Experimental Setup - Looking Toward the Neutron Source	11
4.	Experimental Setup - Looking Away from the Neutron Source	12
5.	2π-Shield Assembly Showing the Top and Free-Field Detectors	13
6.	2π-Shield Assembly Showing the Bottom Detector	14
7.	Mapping Data for HENRE Source	18
8.	Comparison of Measured and Calculated Scattered Fast-Neutron Dose Near Air-Ground Interface 1000 ft from 14-MeV Neutron Source	22
9.	Geometry for Solid Angle Calculations	24

LIST OF TABLES

Table		Page
I.	Last-Collision Fractions for Scattered Dose from 14-MeV Neutron Source	7
II.	Measured Total Fast-Neutron Multicollision Doses	16
III.	Uncollided and Scattered Fast-Neutron Multicollision Doses	19

I. INTRODUCTION

Both experimental and theoretical investigations [1,2,3] have indicated that the total fast-neutron dose or fluence at large distances in air from a neutron source is dependent upon the height of the detector above the ground. None of the experiments have provided much insight on how the height above ground affects the angle distribution of the scattered neutrons. However, the "first-last collision" model[3] of the air-ground interface effect implies that the decrease in neutron intensity as the detector approaches the ground is confined to those neutrons arriving at the detector through the lower 2π solid angle (i.e., from below the horizontal plane containing the detector).

The specific purpose of Project 9.2 of Operation HENRE was to obtain differential measurements of the effect of the air-ground interface on the scattered fast-neutron dose at positions in air near the interface. It was expected that the experiment would either confirm the predicted behavior or would provide a basis for a revised theoretical model for computing interface effects. In either event, Project 9.2 would provide additional resolution of the initial radiation environment to be expected from nuclear weapons and, hence, aid in the optimum design of radiological protection.

Operation HENRE (High Energy Neutron Reaction Experiment) was conducted at the Nevada Test Site using a high output accelerator producing essentially monoenergetic 14-MeV neutrons from the $T(d,n)^4He$ reaction.[4] The accelerator was mounted on an elevator on the 1527-ft BREN tower[1] and, for the interface effects measurements, was operated at a fixed height of 112 ft above the ground. The experiment, which was set up at a distance of 1000 ft from the base of the tower, used a 2π shield to separate the neutron dose arriving from the upper and lower 2π solid angles. The shield and detector assembly was suspended by a hoist system and measurements were made as a function of detector height between 0.75 and 70 ft.

II. THEORETICAL MODEL

The first-last collision method[3] provides an estimate of the interface effect by considering (1) the perturbation of the number of the first collisions in air in the vicinity of the source caused by the ground beneath the source and (2) the perturbation of the number of last collisions that occur in air in the vicinity of the detector caused by the ground beneath the detector. Scattering of neutrons from the ground is treated at both the source and the detector by an albedo approach. The first-last collision method applies only to the scattered component and may be expected to be valid only when the source-detector separation distance is sufficiently large for multiple scattering to be dominant.

The first-last collision method gives a source height factor, $f(H_S)$, and a detector height factor, $f(H_D)$, which may be applied to a fluence or dose, $I(R)$, in an infinite air medium to obtain the dose at the same separation distance, R, but where the source is at height H_S and the detector is at height H_D above the ground:

$$I(H_S,H_D,R) = f(H_S)f(H_D)I(R). \qquad (1)$$

The source height factor, $f(H_S)$, is the effective fraction of the source leakage neutrons which undergo first collisions in air; hence, it affects equally the multiple scattered dose arriving from all directions at a distant detector. It is called an effective fraction because it includes the uncollided neutrons that strike the ground but are scattered back to undergo "first" collisions in air. Since source height was not a variable in the experiment, the dependence upon source height will not be considered further here.

To calculate the detector height factor, $f(H_D)$, it is necessary to consider the contribution from each last-collision center in the air to the total fluence. For this purpose, a

uniform distribution of last collisions is assumed, and the scattering is treated as isotropic in the laboratory system. Although the assumption of isotropic air scattering would be intolerable for a transport calculation, it should not adversely affect the results of the perturbation calculation. At large distances from a source, the last collisions of importance are indeed somewhat uniformly distributed about the detector, and over 60% of the neutrons arriving at the detector have their last interaction within 1 mean free path of the detector.

If the fluence in an air medium is uniform and of unit magnitude, the collision density at any point in the medium is simply Σ_s. In terms of the geometry shown in Figure 1, the fluence at the detector as a result of last collisions occurring in the indicated differential volume is

$$dN = \frac{\Sigma_s e^{-\Sigma_t(\rho^2 + h^2)^{1/2}}}{4\pi(\rho^2 + h^2)} dV, \qquad (2)$$

where Σ_s is the fast neutron macroscopic scattering cross section of air,

Σ_t is the total cross section of air,

ρ and h are the coordinates of dV as defined in Figure 1, and

$dV = \rho d\rho dh d\phi$.

It is a reasonable approximation to set $\Sigma_s = \Sigma_t$ for fast neutrons.[5] With this approximation, application of the appropriate limits and integration over the azimuthal angle ϕ gives the total fluence resulting from last collisions occuring in the air:

$$N(H_D) = \frac{\Sigma_t}{2} \int_{-H_D}^{\infty} \int_{o}^{\infty} \frac{\rho e^{-\Sigma_t(\rho^2 + h^2)^{1/2}}}{\rho^2 + h^2} d\rho dh. \qquad (3)$$

To separate the fluence or dose from above the horizontal midplane of the detector from that below, $N(H_D)$ must be calculated in two parts by dividing the range of integration over h into two ranges: $-H_D$ to 0 and 0 to ∞.

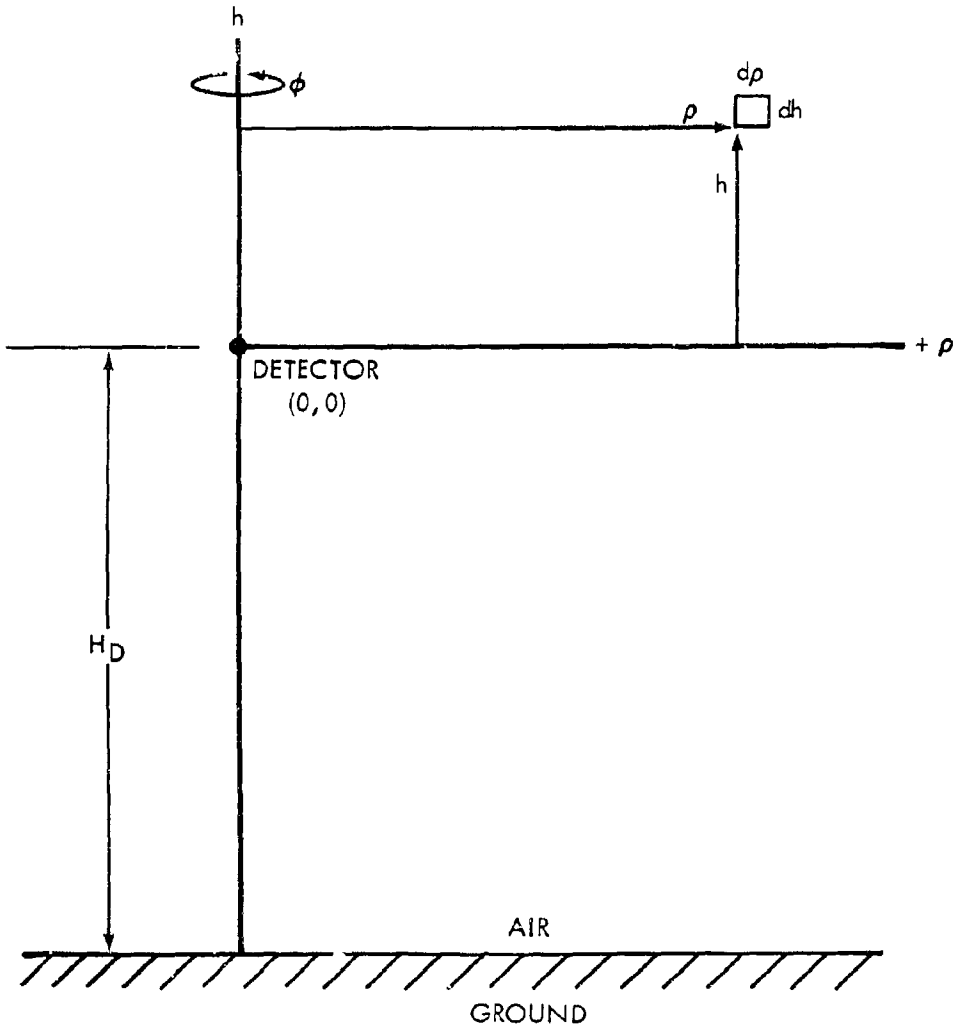

Figure 1. Geometry for Calculation of Last-Collision Fraction

Integration of Equation (3) between the limits of 0 and ∞ on h gives a result of 0.5, which is the fraction of the infinite air dose resulting from collisions in the upper hemisphere (i.e. from above the horizontal midplane of the detector). The integral of Equation (3) between $-H_D$ and 0 is the fraction of the infinite air dose resulting from last collisions in the lower hemisphere.

Also arriving from the lower hemisphere are the neutrons scattered from the ground in the vicinity of the detector. This component is calculated by considering the direct flight of neutrons from the ground to the detector. If a fraction α of the uniform isotropic fluence incident upon the ground is reflected back into the air with a cosine distribution at the ground surface, the ground-scattered fluence at the detector is given by

$$N_g(H_D) = \alpha \int_0^\infty \frac{\rho H_D e^{-\Sigma_t(\rho^2 + H_D^2)^{1/2}}}{(\rho^2 + H_D^2)^{3/2}} \, d\rho. \qquad (4)$$

Since $N(H_D) = 1$ and $N_g(H_D) = 0$ for an infinite detector height, the sum of the two components may be regarded as the fraction, $f(H_D)$, of the fluence or dose in an infinite air medium that would be measured at a height H_D above the ground. Thus

$$f(H_D) = N(H_D) + N_g(H_D). \qquad (5)$$

Equations (3) and (4) were solved numerically for the conditions of the experiment. Assuming an average air density of 1.05×10^{-3} and a scattered neutron energy spectrum at a distance of 1000 ft in infinite air (based on Straker's discrete ordinates calculations[6]), an effective Σ_t of $8.679 \times 10^{-5} cm^{-1}$ was computed for use in the equations. Based on the same energy spectrum, a total dose albedo of 0.1507 was computed using the albedo function for dry Nevada Test Site soil given by French and Wells.[7]

The results of the calculations are summarized in Table I. They are expressed as fractions of the infinite air dose: however, the dependence upon detector height should be the same for scattered neutrons from a source at a finite height, provided that the source is not greatly displaced from the horizontal plane containing the detector. Application of these results in the analysis of the Project 9.2 experimental data is described in Section IV.

Table I. Last-Collision Fractions for Scattered Dose from 14-MeV Neutron Source

(Fraction of Infinite Air Dose)

Detector Height (ft)	From Lower 2π Solid Angle			From Upper 2π Solid Angle	Total (Lower Plus Upper)
	Ground Scattered	Air Scattered	Total		
0	0.1507	0	0.1507	0.500	0.6507
0.75	0.1489	0.0055	0.1544	0.500	0.6544
2.0	0.1463	0.0150	0.1613	0.500	0.6613
4.0	0.1428	0.0265	0.1693	0.500	0.6693
5.0	0.1412	0.0313	0.1725	0.500	0.6725
8.0	0.1369	0.0452	0.1821	0.500	0.6821
14 0	0.1300	0.0680	0.1980	0.500	0.6980
20 0	0.1240	0.0876	0.2116	0.500	0.7110
40.0	0.1085	0.1414	0.2499	0.500	0.7499
60.0	0.0970	0.1830	0.2800	0.500	0.7800
70.0	0.0910	0.2045	0.2955	0.500	0.7955

III. EXPERIMENT

The interface effects experiment was set up at the Nevada Test Site at a distance of 1000 ft from the base of the BREN tower, which supported the HENRE neutron generator. The overall layout is shown in Figure 2. The 1000-ft distance was selected as a compromise between the requirement that the measured doses should consist almost entirely of scattered neutrons and the requirement that the neutron intensity must be high enough to allow accurate measurements. Since the uncollided component at 1000 ft was expected to be approximately 25% of the total, it was too large to neglect. It was planned, therefore, to calculate this component and subtract it from the measurements to obtain values for the scattered doses.

A slab of polyethylene 1 ft thick and 5 ft square was used as a 2π shield to separate the fast neutrons arriving through the upper 2π solid angle from those coming from the lower 2π. A Hurst-type fast-neutron dosimeter (FND)[8] was mounted at the geometrical center of both the upper and lower surfaces of the 2π shield. A third FND was mounted on a boom extending toward the neutron source from the 2π shield for free-field dose measurements. The FND's were mounted on the slab surfaces so that the detector heads (sensitive volume) were flush with the shield surface. The front or forward ends of the detectors were pointed toward the neutron source.

The 2π shield was suspended from a hoist system which was rigged between two wood poles. The poles were set 12 ft apart and extended to a height of 100 ft above the ground surface. Four detector cable hangers were mounted on the poles 30 ft above the ground. These hangers were used to supply extra support for the cable weight at large 2π shield heights. The cables were attached to the four corners of the 2π shield to provide stability and to ensure that the 2π shield remained level at all heights. The fourth cable was used to equalize the weight distribution and was not attached to a detector.

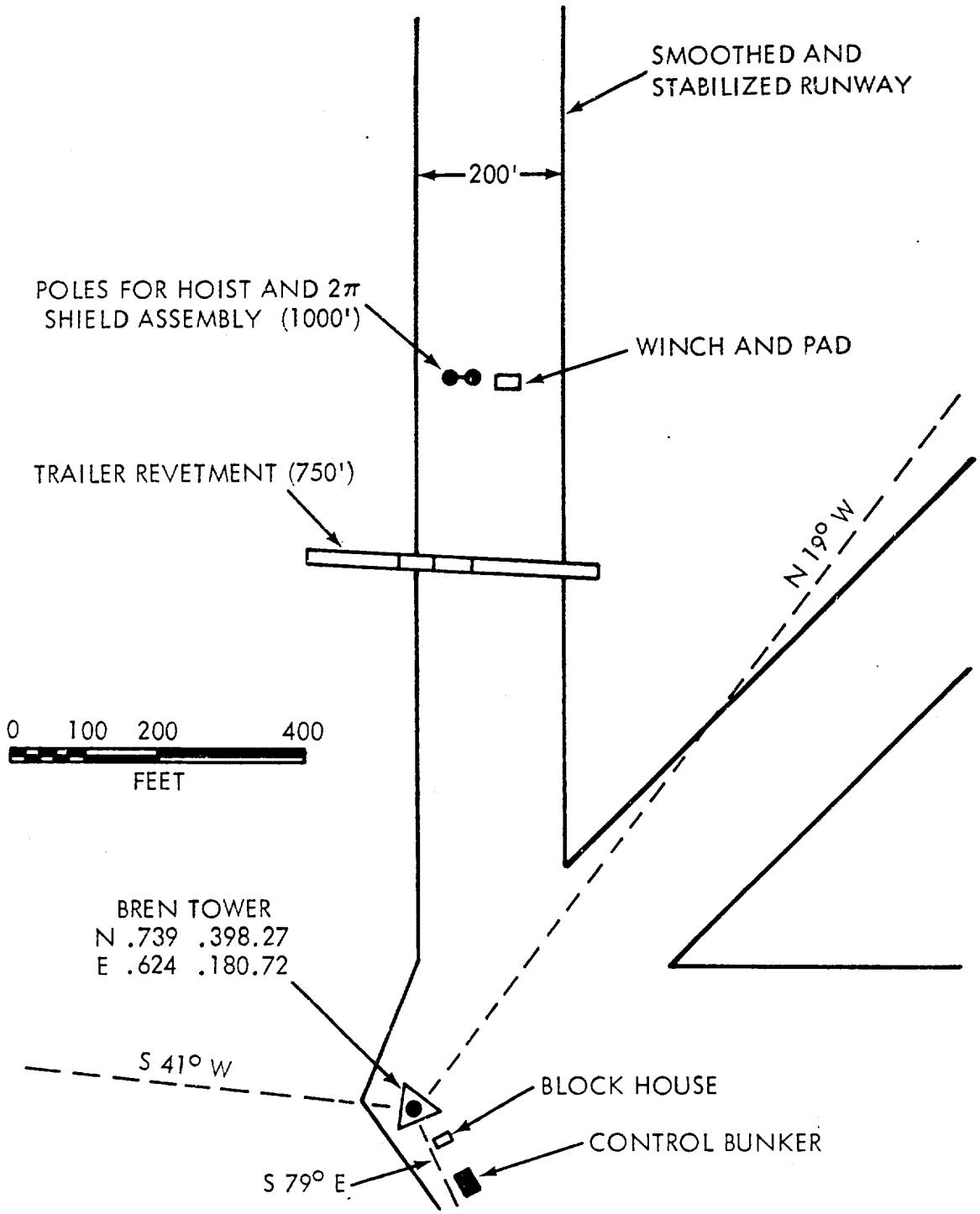

Figure 2. Field Layout of Project 9.2

The experimental geometry with the 2π shield, cable hangers and hoist system is shown in Figure 3. The BREN tower can be seen in the background. The neutron generator is shown at the bottom of the tower, where maintenance was normally performed. Another view of the geometry, looking away from the BREN tower, is shown in Figure 4. Figures 5 and 6 are photographs of the 2π shield assembly showing the location of the upper and lower detectors and the free-field detector which is mounted on the boom pointing toward the neutron source.

Pulses from the detector were amplified in a preamplifier attached to the detector head. The signals were fed through a second amplifier to a digital integrator and the integrated pulses were then sent to recording scalers. The recording instrumentation was located in a trailer parked in a covered revetment approximately 750 ft from the BREN tower in the direction of the experiment. (See Figure 2.) The revetment cover was approximately 3 ft higher than the surrounding ground surface.

Since the neutron intensity from the generator decreased with operating time, it was necessary to monitor the output during data runs with detectors located at a fixed position. The primary monitors consisted of two BF_3 type thermal-neutron detectors which were located approximately 3 ft above the ground at a distance of 408 ft from the base of the BREN tower. These detectors were shielded with polyethylene to provide a tolerable count rate. A secondary monitor system consisting of a fast-neutron dosimeter with an enlarged detector head was used as a back up monitor.

The instrumentation was of the same type as that used in Project 9.1. A more detailed description is available in Reference 8.

The effects of the air-ground interface were measured at 2π-shield heights of 0.75, 2, 4, 5, 8, 14, 20, 40, 60 and 70 ft above the ground surface with a fixed source height of 112 ft. The fast-

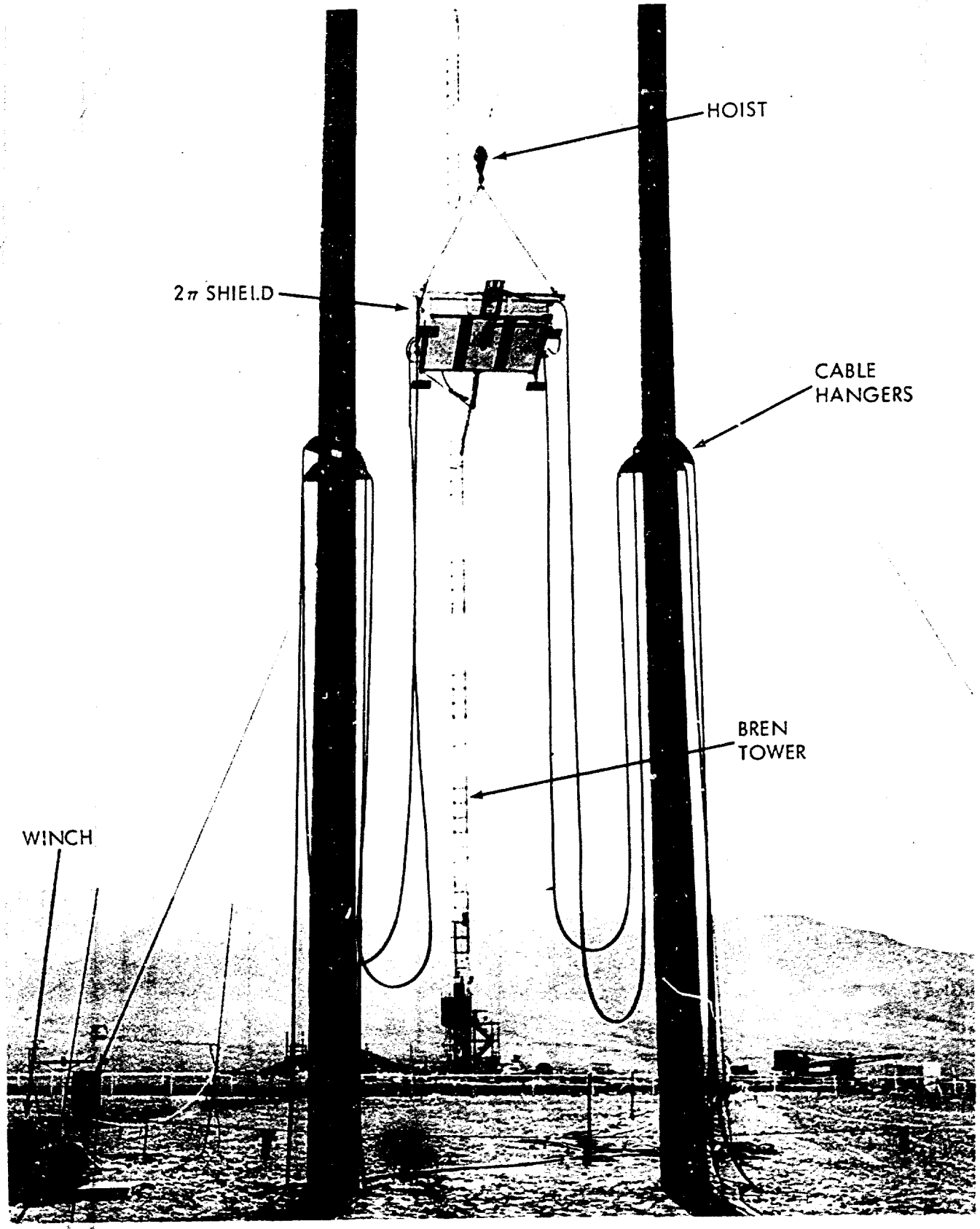

Figure 3. Experimental Setup - Looking Toward the Neutron Source

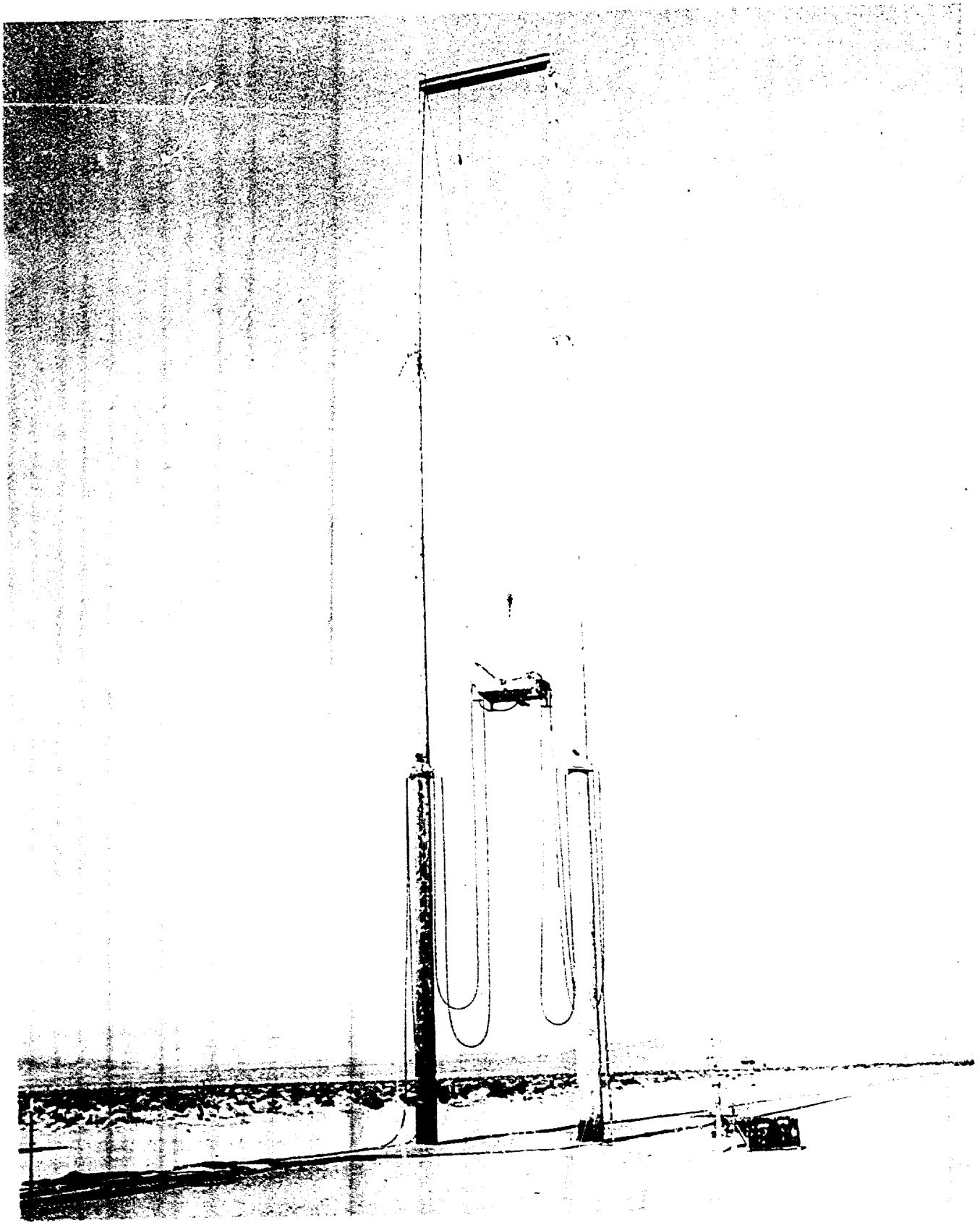

Figure 4. Experimental Setup - Looking Away from the Neutron Source

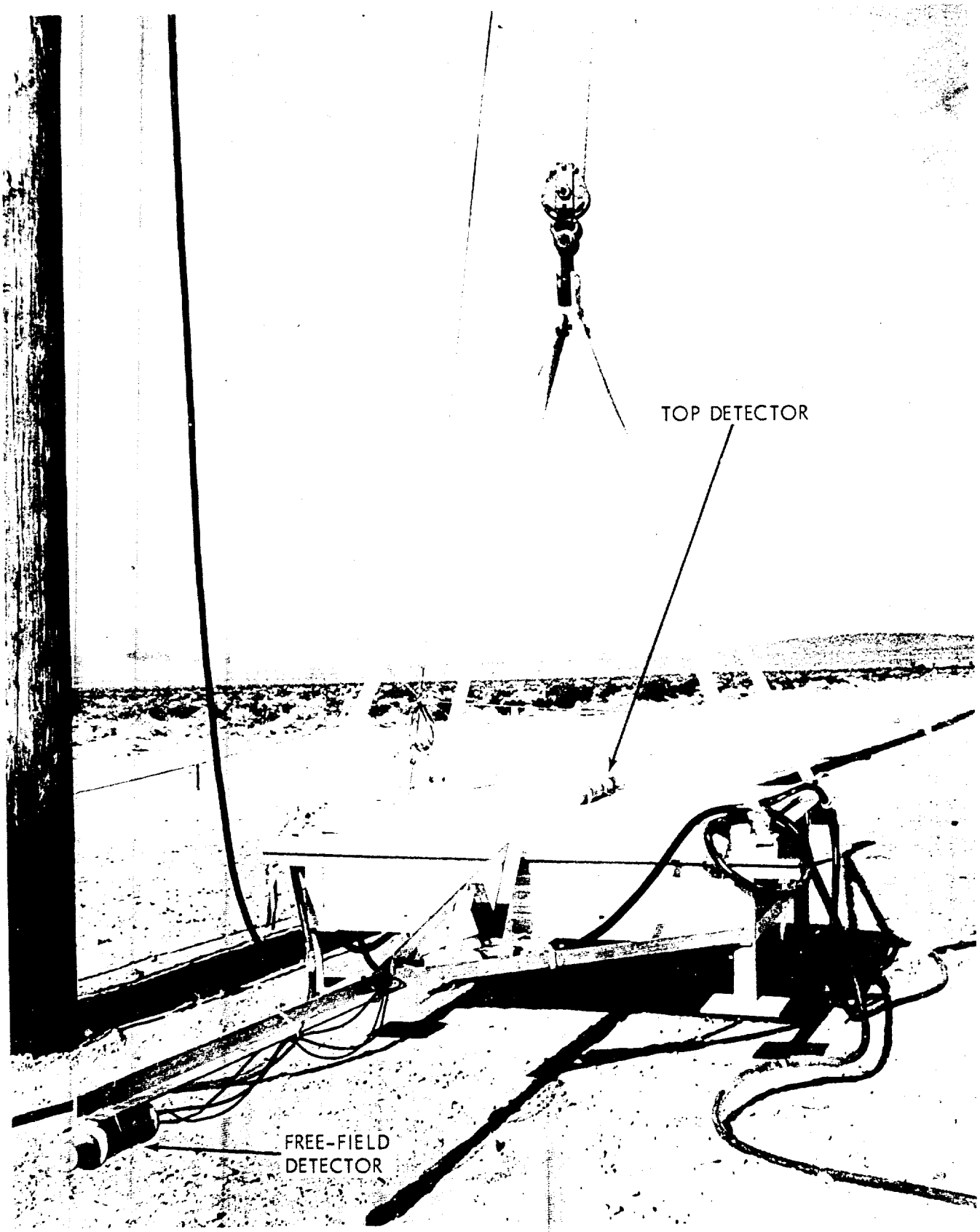

Figure 5. 2π-Shield Assembly Showing The Top and Free-Field Detectors

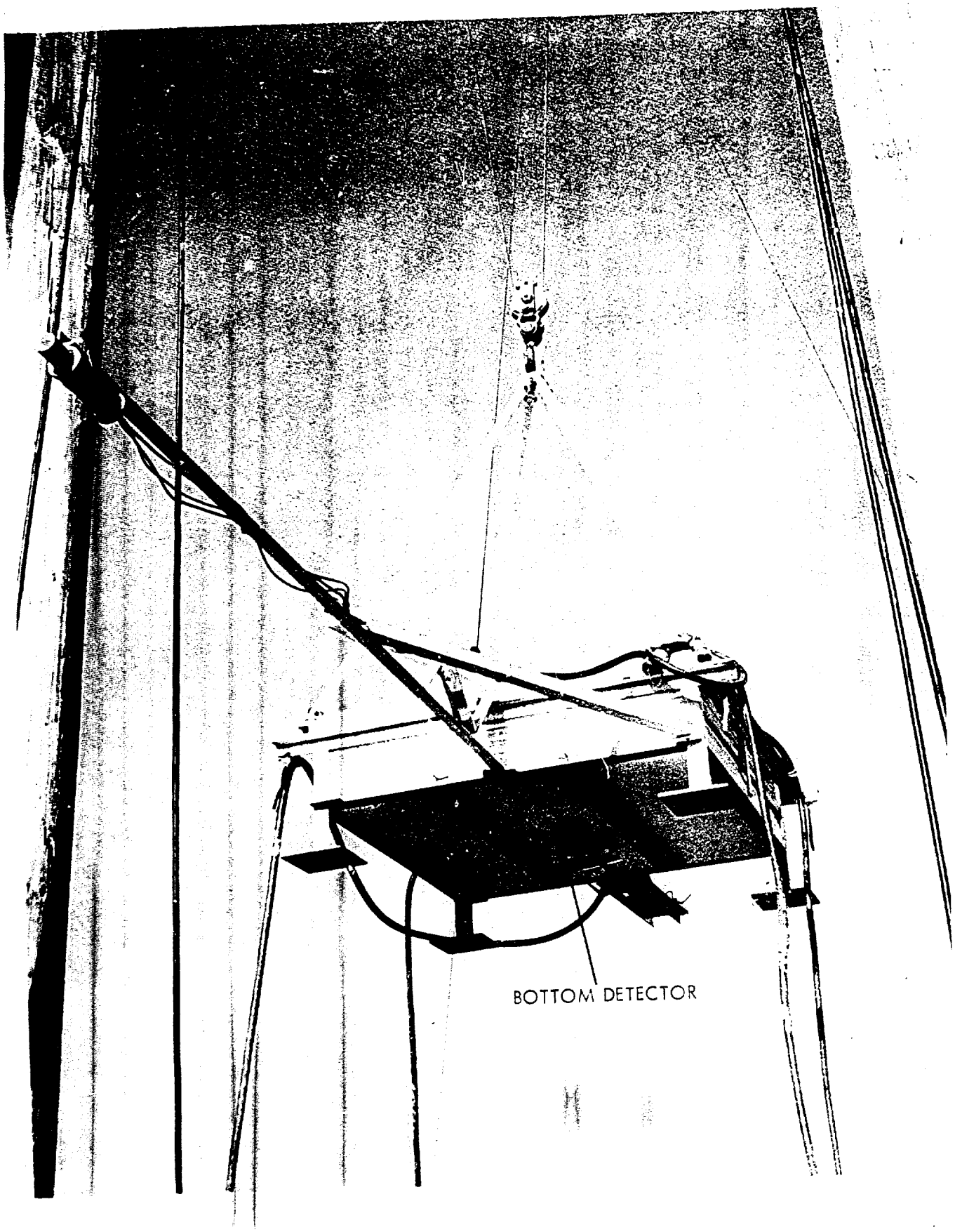

Figure 6. 2π-Shield Assembly Showing the Bottom Detector

neutron dose was obtained above and below the 2π shield and on the "free-field" boom for each of these heights. The 2π-shield height was measured from the bottom of the shield to the ground surface. The center of detection of the bottom detector was approximately 0.75 in. closer to the ground than the indicated shield height. The centers of the top and free-field detectors were 12.75 and 3 in., respectively, further from the ground than the indicated shield height.

Measurements were made at each 2π-shield height by starting and stopping the 2π-shield detectors and monitor detectors at the same time. The 2π-shield detector readings were then divided by the corresponding monitor results and then multiplied by a normalization factor to give the absolute fast-neutron dose per source neutron. The fast-neutron dose was measured in multi-collision rads for incident neutrons of $E>0.5$ MeV (implied RBE of unity). Attempts were made to obtain two independent counts in excess of 10,000 scaler counts each for the lowest counting detector (usually beneath the shield) to provide good counting statistics at each shield height. Duplicate measurements were made at several shield heights on alternate running days.

The results of the measurements are summarized in Table II. A complete tabulation of the data, including dates, air densities, run numbers, and target numbers, is given in the Appendix. All of the measurements were made between 11 and 22 October 1968. The air density varied between 1.035 and 1.074×10^{-3} gm/cm^3 during this period. In those cases where repeat measurements were made, 45% were within 5% of the initial values. 40% were within 5 to 10% of the initial values and the remainder were within 10 to 12%. A probable error of approximately 5% was estimated for the averaged values.

The free-field and top detector data contain an uncollided component that is not affected at all by the presence of the ground. This component must be removed in order to examine the

Table II. Measured Total Fast-Neutron Multicollision Doses

(rad/10^{13} neutrons)

2π-Shield Height (ft)	Detector Location		
	Bottom	Top	Free-Field
0.75	3.508-7*	1.654-6	1.903-6
2.0	4.223-7	1.659-6	1.939-6
4.0	4.852-7	1.597-6	1.898-6
5.0	4.515-7	1.672-6	1.918-6
8.0	5.048-7	1.601-6	1.812-6
14.0	5.623-7	1.643-6	1.941-6
20.0	5.713-7	1.610-6	2.023-6
40.0	6.991-7	1.613-6	1.980-6
60.0	7.481-7	1.521-6	1.938-6
70.0	7.843-7	1.523-6	2.053-6

*Read 3.508-7 as 3.508×10^{-7}.

height dependence of the scattered neutron dose. (The bottom detector contains no uncollided component as it cannot "see" the source because of the 2π shield.)

The uncollided dose from a point isotropic source may be calculated to a high degree of accuracy provided that the source strength and total cross section of the air are known. However, mapping measurements of the neutron fluence at a distance of 1.5 meters from the center of the target in the HENRE neutron generator indicated that the source was not isotropic.[8] The mapping data, given in Figure 7, show a strong minimum near $\theta = 90°$. Measurements were not made beyond 130° because of obstruction by the accelerator above the target.

The 2π-shield detectors subtended source angles of 83.6 to 87.6° as the height varied from 0 to 70 ft. From Figure 7, it is seen that the source strength decreased by 58% between 83.6 and 87.6°. The uncollided component at 1000 ft should vary in the same manner as the detector is raised from 0 to 70 ft; however, at this distance, the height dependence of the air-scattered component should not be significantly affected by the source anisotropy.

Assuming an air density of 1.05×10^{-3} gm/cm^3 and a total macroscopic cross section of 6.705×10^{-5} cm^{-1} for 14 MeV neutrons in air, the uncollided dose at various heights above ground was calculated for a horizontal range of 1000 ft. The results are given in Table III along with the measured scattered fast-neutron doses at the top and free-field detector positions on the 2π-shield. The measured scattered dose is defined as the measured total dose less the calculated uncollided dose. The bottom detector doses, which contained no uncollided component, are also included in the Table.

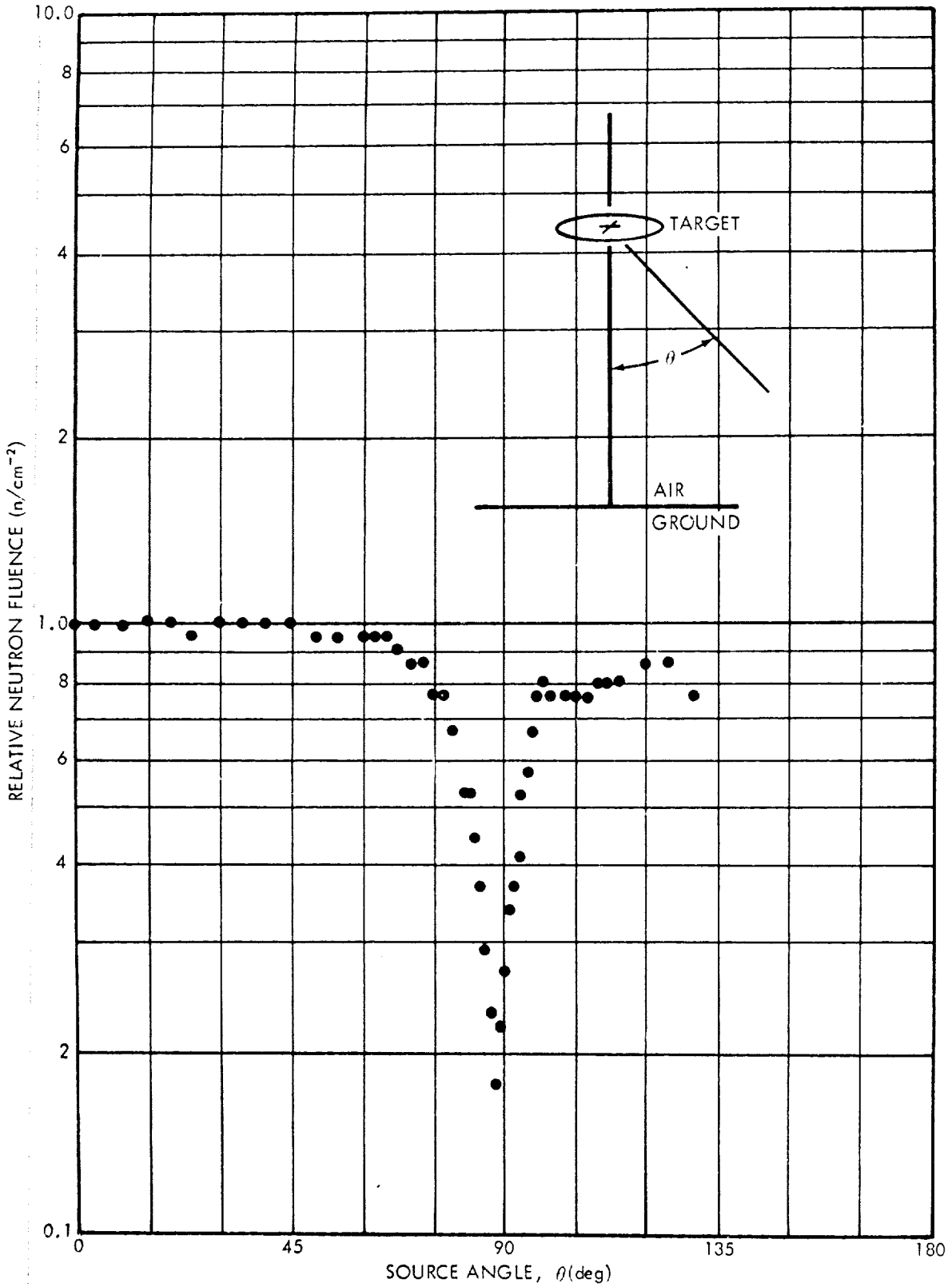

Figure 7. Mapping Data for HENRE Source

Table III. Uncollided and Scattered Fast-Neutron Multicollision Doses

(rad/10^{13} neutrons)

2π-Shield Height (ft)	Calculated Uncollided	Measured Scattered		
		Bottom Detector	Top Detector	Free-Field Detector
0.75	3.534-7*	3.508-7	1.300-6	1.549-6
2.0	3.490-7	4.223-7	1.310-6	1.590-6
4.0	3.444-7	4.852-7	1.253-6	1.554-6
5.0	3.413-7	4.515-7	1.331-6	1.577-6
8.0	3.329-7	5.048-7	1.268-6	1.479-6
14.0	3.167-7	5.623-7	1.326-6	1.624-6
20.0	2.975-7	5.713-7	1.312-6	1.726-6
40.0	2.283-7	6.991-7	1.385-6	1.752-6
60.0	1.745-7	7.481-7	1.346-6	1.764-6
70.0	1.507-7	7.843-7	1.372-6	1.902-6

*Read 3.534-7 as 3.534×10^{-7}

IV. ANALYSIS

Examination of the scattered doses listed in Table III reveals that the dose at the top detector is relatively independent of height. However, the dose at the bottom detector increases by a factor of more than 2 as the height is increased from 0.75 to 70 ft. This behavior is consistent with the last collision model's prediction that the air-ground interface effect is confined to those neutrons arriving at the detector through the lower 2π solid angle.

In order to make quantitative comparisons of the calculated and measured interface effects, the calculated total last collision fraction (Table I) was normalized to the measured free-field detector dose at a height of 70 ft. This height was selected for the normalization because the interface effect should be least at this height. Comparison of the normalized results will show the extent to which the theoretical model estimates the fraction of the 70-ft free-field dose observed at lower heights.

Early in the planning stages of the experiment, it was recognized that, in comparing the calculated and measured data, the effect of the neutron backscattering from the polyethylene comprising the 2π shield would have to be taken into account. The expectation that backscattering would contribute significantly to the dose measured by the top and bottom detectors is substantiated by the fact that the sum of the doses measured by those detectors exceeds the free-field detector dose by 6 to 17%.

Rather than attempt to remove the backscattered component from the measured doses, it was decided to add this component to the calculated data. A total fast-neutron dose albedo of 0.117 for polyethylene was inferred from the measured data by averaging the fraction by which the top plus bottom dose exceeded the free-field dose at the various detector heights. This value is consistent with other measured[9] and calculated[10] polyethylene

albedos for fast neutrons. Consequently, the normalized calculated doses for the top and bottom detectors were increased by 11.7% before they were compared with the measurements.

The measured and calculated doses versus height are compared in Figure 8. It should be noted that all doses for a given 2π shield height are plotted at the height corresponding to the bottom of the shield. As indicated in Section III, the center of detection of the bottom detector was actually 0.75 in. lower than the bottom of the 2π shield, and the centers of the top and free-field detectors were higher by 12.75 and 3 in., respectively. However, the variation of the dose caused by the displacement of the detectors from the bottom of the 2π shield is small enough to neglect in making the comparisons.

Including the normalized point (free-field at 70 ft), the calculations differ from the measured doses by an average of 3.4% which is within the 5% probable error estimated for the measurements. Over one-fourth of the measured points are within 1% of the calculations and approximately one-half are within 1 to 5%. Only two of the measured points differ from the calculations by 10% or more. One of these, the free-field dose at 8 ft, is probably a faulty measurement; and the other, the bottom detector dose at 0.75 ft, seems to be low because of a ground shadowing effect that appears as the 2π shield closely approaches the ground.

Except for the bottom detector measurements at heights less than 5 or 10 ft, the shapes of the calculated curves are in substantial agreement with the measured data. It was hypothesized that the neutron dose measured by the bottom detector falls off faster than the calculation as the 2π shield nears the ground because the 2π shield decreases the number of neutrons incident upon the ground in the vicinity of the bottom detector. The calculated dose includes a ground-scattered component, but it is based on the fluence that would be incident upon the ground in the absence of the 2π shield.

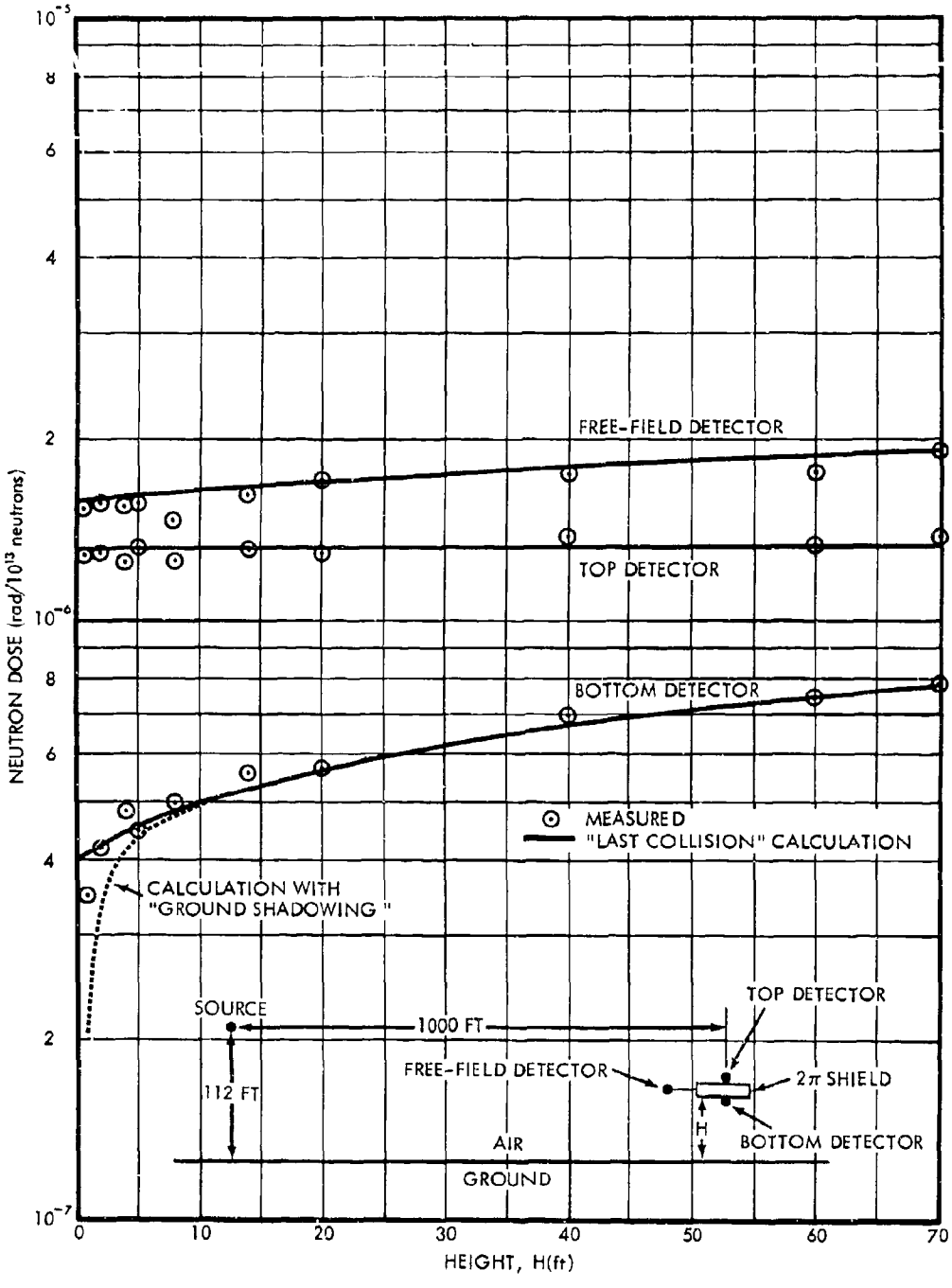

Figure 8. Comparison of Measured and Calculated Scattered Fast-Neutron Dose Near Air-Ground Interface 1000 ft from 14-MeV Source

To test the hypothesis, the ground scattering calculations were revised to take into account the shadowing effect of the 2π shield. As in the original calculations, it was assumed that the neutrons were isotropically incident upon the ground surface. Under this assumption, the 2π shield reduces the neutron fluence at a given point on the ground surface by the fraction of the 2π solid angle above the point that is subtended by the 2π shield.

If the 2π shield subtends a solid angle Ω, the solid angle fraction (as well as the factor by which the incident fluence is reduced) is given by the equation:

$$\omega = \frac{\Omega}{2\pi} \tag{6}$$

To facilitate the calculation of ω, the 5-ft-square 2π shield was assumed to be equivalent to a disc shield with the same surface area. The geometry for the calculation is shown in Figure 9.

The solid angle subtended by the equivalent disc shield from a point at radius ρ on the ground surface is given by the expression:

$$\Omega = \int_0^{2\pi}\int_0^{\rho_0} \frac{r_1 \cos\gamma}{R^2}\, dr_1 d\phi. \tag{7}$$

In solving Equation (7) for points at various radii on the ground surface for several 2π-shield heights, the following equalities were used:

$$\cos\gamma = H_D/R,$$

$$R = (H_D^{\,2} + r_2^{\,2})^{1/2},$$

$$r_2^{\,2} = r_1^{\,2} + \rho^2 - 2r_1\rho \cos\phi.$$

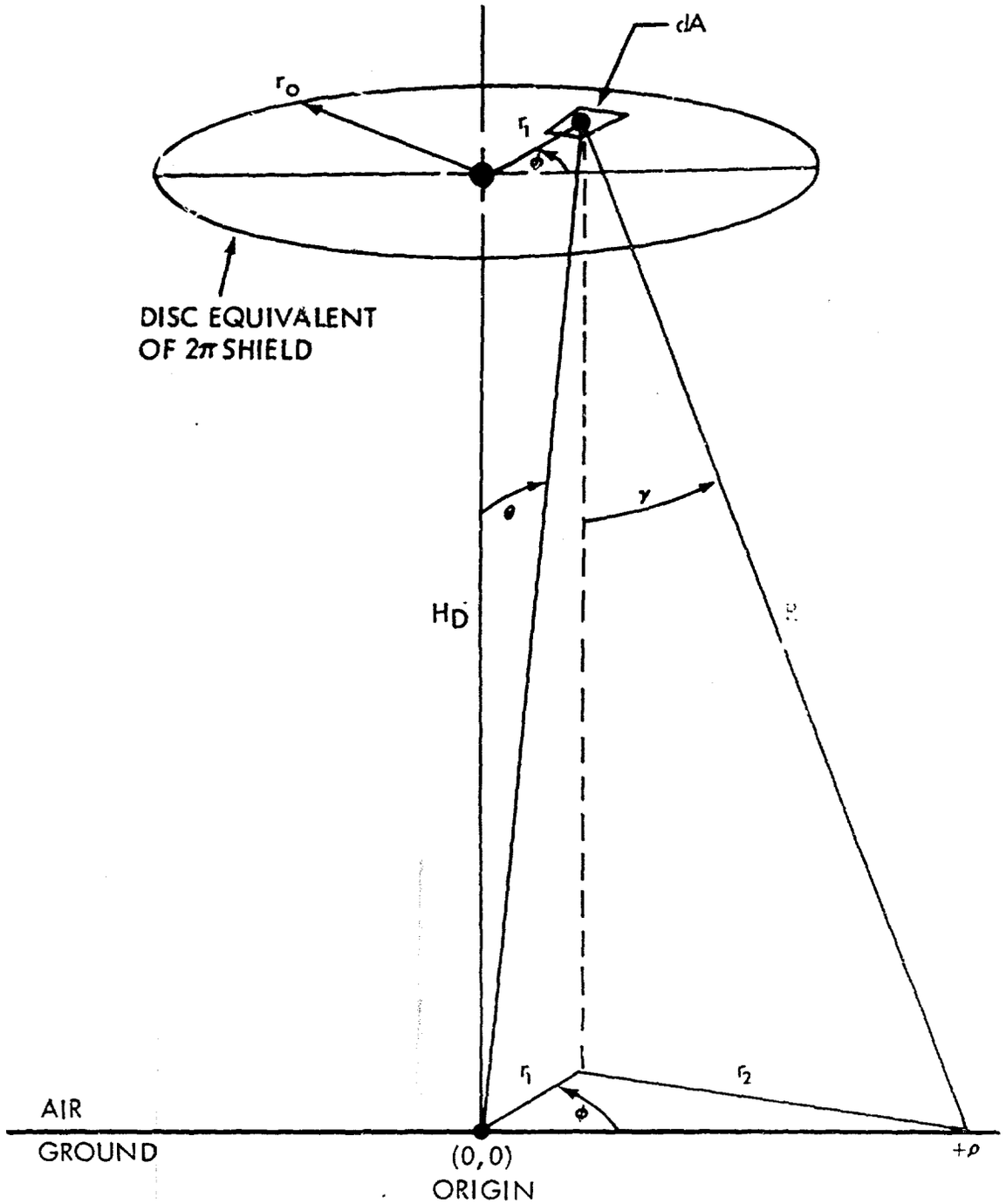

Figure 9. Geometry for Solid Angle Calculations

The solid angle fraction, ω, computed for the various values of ρ and H_D was denoted $\omega(H_D,\rho)$ and used as a weighting factor in the ground scattering equation:

$$N_g(H_D) = \alpha \int_0^\infty \omega(H_D,\rho) \frac{\rho H_D e^{-\Sigma_t(\rho^2 + H_D^2)^{1/2}}}{(\rho^2 + H_D^2)^{3/2}} \, d\rho \qquad (8)$$

The other terms in the equation are the same as those used in Equation (4).

The revised ground scattering calculations were combined with the previous air scattering results for the bottom detector and then normalized as before. The revised results, shown as a dashed line in Figure 8, differ significantly from the original results only for 2π-shield heights less than 10 ft. Although the revised curve is lower than the measured bottom detector dose, its shape agrees with the measurements reasonably well. It tends, therefore, to support the ground shadowing hypothesis.

V. CONCLUSIONS

The results of the 2π-shield experiment clearly reveal that near the air-ground interface at large distances from a fast-neutron source, the scattered dose arriving through the upper 2π solid angle (i.e., from above the horizontal plane containing the detector) is essentially independent of detector height. The scattered dose from the lower 2π solid angle increases by approximately a factor of two as the detector is raised from the ground surface to a height of 70 ft. The scattered total dose increases by less than 25% over the same range because it is dominated by the essentially constant dose from the upper 2π solid angle.

The experimental results confirm, both qualitively and quantitively, the behavior predicted by the "first-last collision model"[3] of the air-ground interface effects. When normalized to the measured free-field dose at the maximum height of 70 ft, the model gives free-field, upper 2π, and lower 2π doses that agree with the corresponding measurements within the probable experimental error at virtually all other heights. Perturbations in the measurements caused by neutron backscattering from the polyethylene 2π shield and by shadowing of the ground by the shield were considered in making the comparison.

In effect, the 2π shield served as an extremely wide-mouthed collimator and allowed measurement of the neutron angle distribution at various heights above the ground in terms of two very large angle groups. In view of the success of the first-last collision model in predicting the effect of the air-ground interface on these coarsely defined angle distributions, it is suggested that the model could be reformulated to give the interface effect in terms of smaller angle intervals.

REFERENCES

1. F. F. Haywood, "Spatial Dose Distributions in Air-Over-Ground Geometry," Health Physics, 11, 185 (1965).

2. F. J. Muchenthaler, L. B. Holland, and R. E. Maerker, "In-Air Measurements in the Vicinity of the TSR-II," Oak Ridge National Laboratory, ORNL-3288, (1963).

3. R. L. French, "A First-Last Collision Model of the Air/Ground Interface Effect on Fast-Neutron Distributions," Nuclear Science and Engineering, 19, 151 (1964).

4. F. F. Haywood, T. G. Provenzano, and J. A. Auxier, Editors, "Operations Plan-Operation HENRE," U. S. Atomic Energy Commission, CEX-65.03 (1965).

5. E. P. Blizard, Editor, Reactor Handbook, Volume III, Part B Shielding, (2nd Edition), p. 233, Interscience, New York (1962).

6. E. A. Straker and M. L. Gritzner, "Neutron and Secondary Gamma-Ray Transport in Infinite Homogeneous Air," Oak Ridge National Laboratory, ORNL-TM-2503 (to be published).

7. R. L. French and M. B. Wells, "An Angle-Dependent Albedo for Fast-Neutron-Reflection Calculations," Nuclear Science and Engineering, 19, 441 (1964).

8. M. E. Kolker, B. O. McCauley, and G. T. Western, "UNITED STATES/FEDERAL REPUBLIC OF GERMANY JOINT MAIN BATTLE TANK RADIOLOGICAL ARMOR PROGRAM: Experimental Confirmation of Radiological Armor Design Theory Phase IV Interim Report," General Dynamics/Fort Worth, FZK-363 (1960). Secret

9. R. L. Henry, L. G. Mooney, and R. J. Prevost, "Study of Radiation Penetration and Reflection from Shield Materials," General Dynamics/ Fort Worth, FZK-183 (1964).

10. F. J. Allen, A. Futterer, W. Wright, and A. Budka, "The Transmission of Monoenergetic Neutrons Through Polyethylene-Machine Calculations," Ballistic Research Laboratories, BRL 1130 (1961).

APPENDIX

Tabulation of Measured Data

(rad/10^{13} neutrons)

Date (1968)	Air Density (gm/ℓ)	Run No.	Target No.	2π-Shield Height* (ft)	Detector Location		
					Bottom	Top	Free Field
11 Oct	1.035	68-17	49	2	4.110-7**	1.667-6	1.957-6
14 Oct	1.054	68-18	53	5	4.481-7	1.694-6	1.906-6
15 Oct	1.074	68-19	53	5	4.550-7	1.649-6	1.930-6
				20	5.664-7	1.929-6	2.123-6
				60	7.379-7	1.529-6	---
17 Oct	1.061	68-20	55	0.75	3.683-7	1.587-6	1.907-6
				2	4.212-7	1.665-6	1.911-6
				4	4.706-7	1.555-6	1.872-6
				8	5.048-7	1.601-6	1.812-6
				20	5.763-7	1.590-6	1.923-6
21 Oct	1.040	68-22	50	2	4.346-7	1.645-6	1.948-6
				4	4.997-7	1.639-6	1.924-6
				14	5.623-7	1.648-6	1.941-6
				40	6.991-7	1.613-6	1.980-6
				60	7.583-7	1.513-6	1.938-6
				70***	8.102-7	1.484-6	1.967-6
22 Oct	1.038	68-23	50	0.75	3.333-7	1.721-6	1.899-6
				70	7.583-7	1.562-6	2.139-6

* Measured from bottom surface of shield.

** Read 4.110-7 as 4.110×10^{-7}.

*** These data were actually measured at a height of 72 ft but were averaged with the 70-ft data for improved statistical accuracy.

Unclassified
Security Classification

DOCUMENT CONTROL DATA - R & D

(Security classification of title, body of abstract and indexing annotation must be entered when the overall report is classified)

1. ORIGINATING ACTIVITY *(Corporate author)*
Radiation Research Associates, Inc.
3550 Hulen Street
Fort Worth, Texas 76107

2a. REPORT SECURITY CLASSIFICATION
Unclassified

2b. GROUP

3. REPORT TITLE
Differential Measurements of Fast-Neutron Air-Ground Interface Effects; Project 9.2, Operation HENRE

4. DESCRIPTIVE NOTES *(Type of report and inclusive dates)*
Final Report

5. AUTHOR(S) *(First name, middle initial, last name)*
French, R. L.
Mooney, L. G.

6. REPORT DATE
15 July 1969

7a. TOTAL NO. OF PAGES
28

7b. NO. OF REFS
10

8a. CONTRACT OR GRANT NO.
DA-20-113-AMC-06121(T)

b. PROJECT NO. 1X542706D372

c.

d.

9a. ORIGINATOR'S REPORT NUMBER(S)
RRA-T95

9b. OTHER REPORT NO(S) *(Any other numbers that may be assigned this report)*
Technical Report No. 10590

10. DISTRIBUTION STATEMENT
Distribution of this document is unlimited.

11. SUPPLEMENTARY NOTES

12. SPONSORING MILITARY ACTIVITY
TACOM, Physical Science Laboratory
U. S. Army Tank Automotive Command
Warren, Michigan

13. ABSTRACT

The effect of the air-ground interface on the scattered fast-neutron dose near the ground was measured at a distance of 1000 ft from a 14-MeV neutron source. The source was the HENRE accelerator operated at a height of 112 ft on the BREN tower at the Nevada Test Site. A horizontal slab of polyethylene 1 ft thick and 5 ft square with Hurst-type fast-neutron dosimeters mounted on its upper and lower surfaces, separated the neutrons arriving through the upper 2π solid angle from those from the lower 2π. A third detector, mounted on a boom, measured the free-field. The entire assembly was suspended by a hoist system to make measurements at 0.75 to 70 ft above the ground. The scattered dose at the top detector was essentially constant, that at the bottom detector increased by a factor of approximately 2 between 0.75 and 70 ft, and the free-field dose increased by less than 25% over the same height range. The experiment provided confirmation, both qualitative and quantitative, of the "first-last collision model" of the air-ground interface effect.

DD FORM 1 NOV 65 1473 REPLACES DD FORM 1473, 1 JAN 64, WHICH IS OBSOLETE FOR ARMY USE.

Unclassified
Security Classification

14. KEY WORDS	LINK A ROLE	LINK A WT	LINK B ROLE	LINK B WT	LINK C ROLE	LINK C WT
Air-Ground Interface						
Interface Effect						
2π Shield						
Neutron Scattering						
Last Collision						
Operation HENRE						