AMRL-TR 68 190

AD 692720

WATER RECLAMATION BY REVERSE OSMOSIS

JOHN K. FOSSUM, PhD

Melpar, Inc.

MAY 1969

SEP 15 1969

This document has been approved for public release and sale; its distribution is unlimited.

AEROSPACE MEDICAL RESEARCH LABORATORY
AEROSPACE MEDICAL DIVISION
AIR FORCE SYSTEMS COMMAND
WRIGHT-PATTERSON AIR FORCE BASE, OHIO

54

AMRL-TR-68-190

WATER RECLAMATION BY REVERSE OSMOSIS

JOHN H. FOSSUM, PhD

This document has been approved for public release and sale; its distribution is unlimited.

FOREWORD

This project was initiated by the Aerospace Medical Research Laboratories, Wright-Patterson Air Force Base, Ohio. This research was carried out by Melpar, Inc., 7700 Arlington Boulevard, Falls Church, Virginia 22046, under contract number F33615-67-C-1534 and in support of Project 6373, "Equipment for Life Support," Task 637304, "Waste Recovery and Utilization," and Work Unit 003, "Water Reclamation by Reverse Osmosis." Mr. Sol Nelson was principal investigator and project manager from the start of the program in April 1967 until June 1967, from which date and for the balance of the program, Dr. John H. Fossum was program manager and principal investigator. He was assisted by the following personnel: Mr. John Lazar, mechanical engineer, Mr. Albert Hadermann, senior chemist, Dr. Eli Schatz, senior scientist, Mr. Edward W. Dunklin, senior chemist, Mr. James Brotherton, junior engineer, and Mrs. Evelyn Muth, senior technician. Dr. S. Sourirajan was retained as consultant by Melpar during the course of the project, Mr. Albert B. Hearld, Biotechnology Branch, Life Support Division, Aerospace Medical Research Laboratories,* was the contract monitor. This report covers work conducted from April 1967 to August 1968.

This technical report has been reviewed and is approved.

C. H. KRATOCHVIL, Colonel, USAF, MC
Commander
Aerospace Medical Research Laboratory

---

*In December 1968 the Biotechnology Branch and the Life Support Division were abolished and the Laboratories were redesignated Aerospace Medical Research Laboratory.

ABSTRACT

A laboratory reverse osmosis system capable of purifying 4 liters of a mixture of 2.4 liters of urine and 1.6 liters of either wash or dehumidification water in a 24-hour period was fabricated by Melpar, Inc. The quantitative rejection of urea by the membranes was found to be the major problem. Urea rejection by complexing urea with various chemicals was investigated but no significant increase was realized. The effect of storage conditions on membrane performance was investigated. A study was made of the annealing of cellulose acetate membranes and attempts were made to develop satisfactory benzyl derivatives of cellulose acetate. A method was developed which permitted a rapid evaluation of membrane performance. A satisfactory membrane was found to result from the precise control of the annealing process.

TABLE OF CONTENTS

Section		Page
I	INTRODUCTION	1
II	EXPERIMENTAL PROCEDURES	3
	Reverse Osmosis Apparatus	3
	General Procedure for Casting Membranes	3
	Perchlorate Method	3
	Formamide Method	6
	General Procedure for Annealing Membranes	7
	Storage of Membranes	7
	Analysis of Product Water	7
III	RESULTS AND DISCUSSION	10
	Comparison of Melpar and Commercial Membranes	10
	Effects of Annealing Temperature and pH of Storage Buffer Solution	13
	Urea Removal by Complex Formation	15
	Chemical Modification of Cellulose Acetate Membranes	17
IV	CONCLUSIONS	23
Appendix I.	Preparation of Benzyl Cellulose-Cellulose Acetate Derivatives	25
Appendix II.	Solvent Systems Tried with Benzyl Cellulose Derivatives	31
Appendix III.	Analysis of Urine for Salt and Urea by Conductance and Refractive Index Measurements	35
REFERENCES		47

LIST OF TABLES

Table		Page
I	Comparison of Analysis for Urea by Diacetylmonoxime and Conductivity Refractometer Methods	9
II	Original Screening of Membranes	11
III	Rejection Rates of Formamide Membranes	12
IV	Effect of Annealing Temperature and pH	13
V	Effect of Storage of Membranes at pH 5 on Their Rejection of NaCl and Urea	14
VI	Effect of Annealing Conditions on Rejection Rate	14
VII	Rejection Rates for Urea after Being Complexed	16
VIII	Effect of Oxalic Acid for Urea Removal	18

LIST OF ILLUSTRATIONS

Figure		Page
1	Schematic Diagram, Reverse Osmosis	4
2	Reverse Osmosis Cells	5

SECTION I

INTRODUCTION

The primary objective of the research program conducted by Melpar, Inc., was to develop a suitable membrane for recovering potable water from human urine, wash water, and dehumidification water, by the reverse osmosis process. A laboratory model of a reverse osmosis system capable of producing potable water from a mixture of the aforementioned waters and suitable for testing the membranes developed under the program was designed and fabricated. This report describes the methodology employed toward the successful development of a membrane, which produced potable water meeting the specifications set by the Aerospace Medical Research Laboratories.

As is evident from lowering the vapor pressure, lowering the freezing point, and elevating the boiling point of a solvent, the free energy or chemical potential of a solvent is lowered when a solute is dissolved therein. If a solution is separated from the same solvent by a membrane permeable to solvent molecules but not to solute molecules, there will occur a net flow of solvent molecules from the region of high chemical potential (the solvent) to one of lower chemical potential (the solution). If a pressure is applied to the solution side of the membrane, the net flow of solvent molecules into the solution will be reduced and the pressure required to reduce this net flow to zero is, by definition, the osmotic pressure of the solution. If the pressure on the solution side of the semipermeable membrane exceeds this osmotic pressure there will be a net flow of solvent molecules from the solution and we will have the circumstance of "reverse" osmosis.

Van't Hoff was the first to observe the similarities between the properties of gases and the osmotic properties of solutions. He drew a parallel between the temperature, pressure, and volume of an ideal gas and the temperature, osmotic pressure, and volume of a solution:

$$\Pi = \frac{n_2 RT}{V} = \frac{cRT}{M} \tag{1}$$

where

Π = osmotic pressure

n_2 = moles of solute

V = volume of solution

R = universal gas constant

T = absolute temperature

M = solute molecular weight

c = solute concentration

As a first approximation, the water flux (J) will be proportional to the pressure (P) in excess of the osmotic pressure (Π) or

$$J \propto P - \Pi \tag{2}$$

The normality is 0.435 for a mixture of urine and dehumidification water in the ratio 6:4. From equation 1 the osmotic pressure, Π, of such a mixture will be

$$\Pi = cRT = 0.435 \times 0.082 \times 298 = 10.6 \text{ atmospheres}$$

In equation 2 the water flux (mass per unit area per unit time) is a function of the excess of the applied pressure over the osmotic pressure. A pressure in excess of 1500 psia will be required to yield a 90% recovery of fresh water from such a mixture.

A useful application of the phenomenon of osmosis has been the determination of the molecular weight of polymeric molecules by measuring the osmotic pressure of a solution of the polymer and then calculating the molecular weight from equation 1 above. When the reverse osmosis principle has been applied to non-ionic species, the rejection of the species has been found (refs 1, 2, 3) to be much less than would have been anticipated if one assumed uniform pore diameters in the membrane and therefore concluded that membrane rejection should increase with increasing molecular size. This assumes that rejection is dependent solely upon the ease with which a molecule or ion can penetrate holes or pores in a membrane. That the real mechanism is more complex is indicated by Loeb's ability to achieve rejections of 99% with ionic species (ref 4) whereas Ambard and Trautman (ref 1), in studying the rejection of urea, glucose, and sucrose, found rejections of only 0.5, 5.0, and 9.0%, respectively. There are two possible mechanisms by which the rejection rate of urea might be increased: (1) form a double salt, thereby converting the urea into an ionic species or (2) form an inclusion compound by the addition of a straight chain compound to a solution of urea. When, for example, n-decane is added to a solution of urea in methyl alcohol, a crystalline addition compound is immediately precipitated. Not only are the normal paraffins capable of giving such addition compounds but so are some alcohols, aldehydes, ethers, and other straight chain molecules. Such molecules are capable of complexing several molecules of urea and the complex may be of such size that it cannot pass through the pores of the membrane.

Still another method for increasing the rejection of urea is by modification of the cellulose acetate by the addition of substituent groups to the cellulose acetate polymer, and it is this possibility which absorbed the major effort of this study.

Section II

EXPERIMENTAL PROCEDURES

REVERSE OSMOSIS APPARATUS

Figure 1 shows schematically the system used in these studies to evaluate the performance of membranes. Figure 2 shows a detailed assembly of one of the cells. The entire system was fabricated from Type 316 stainless steel. All fittings were stainless steel Swagelok compression fittings, and the system was designed to withstand a pressure of 2500 psia. By reference to figure 1, it can be seen that the test fluid is pumped from the reservoir through a filter and into the reverse osmosis cells which are arranged in parallel. The pump selected for this system was a Milton Roy piston-operated metering pump with its own flow control. Pressure was controlled by the needle valve preceding the flowmeter. As the urine becomes more concentrated on passing through the reverse osmosis cells, the solubility of some of its dissolved solids will be exceeded and crystals will become suspended in the feed. In order to minimize the deposition of these solids on the membrane surfaces, a prefilter was incorporated in the system before the reservoir. During its passage through the system it was found that the feed was heated somewhat. A water-cooled bath was inserted after the last cell to avoid excessive heating.

The system used contained four cells. The system was first fabricated with only one cell and the results indicated that approximately 0.1 ft^2 of membrane area (the filtering area available in one cell) was required for each liter of feed solution processed per day. Thus, to fulfill the original requirement of processing 10 liters per day, 10 cells would have been required. For reasons of economy of motion, this requirement was reduced to four liters per day and, therefore, only four cells were required.

GENERAL PROCEDURE FOR CASTING MEMBRANES

Perchlorate Method

Composition of Casting Solutions

(1)	Cellulose Ester:	17.0 grams
(2)	Acetone:	68.0 grams
(3)	Magnesium Perchlorate:	1.5 grams
(4)	Water:	13.5 grams

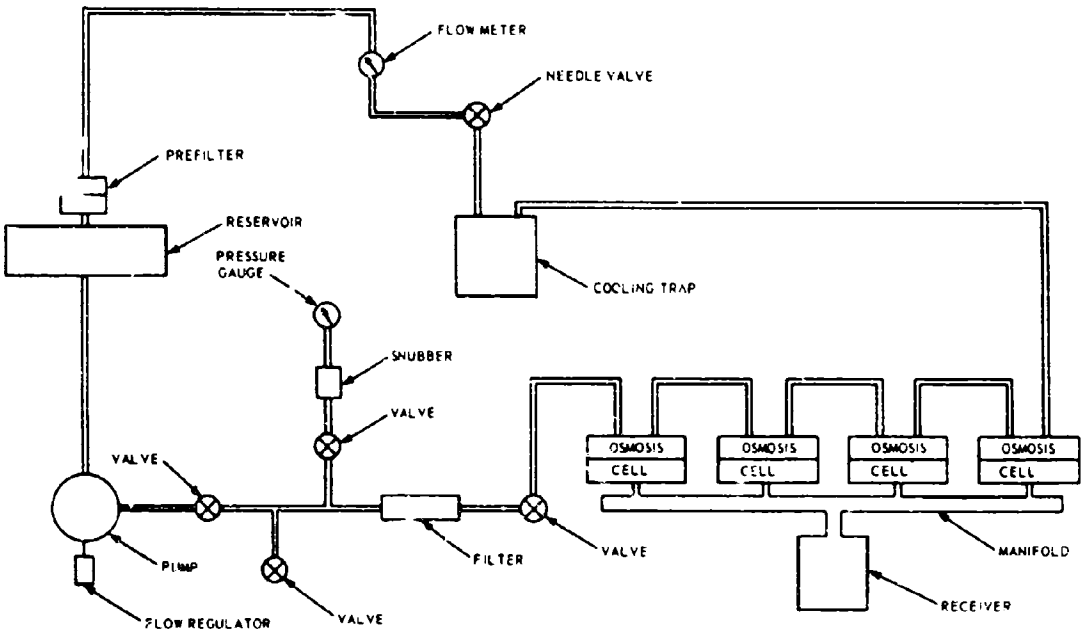

Figure 1. Schematic Diagram, Reverse Osmosis

B1340

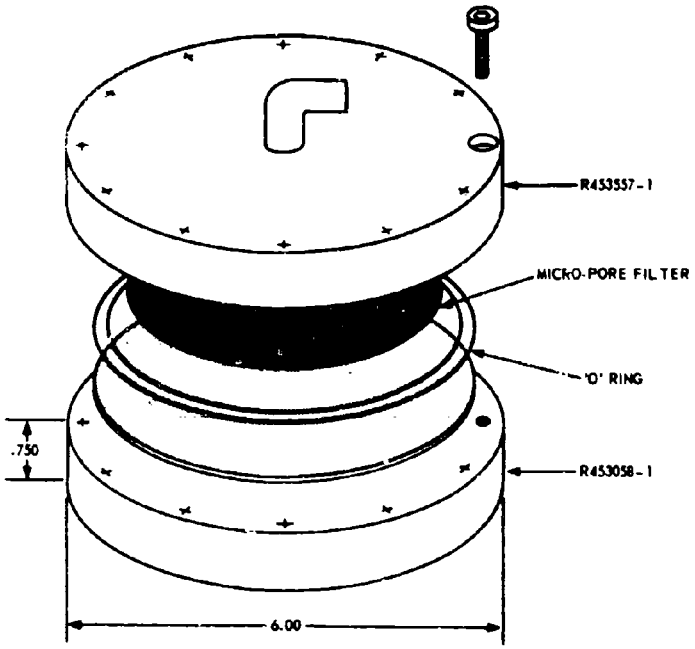

a) FILTER CELL R453060-2

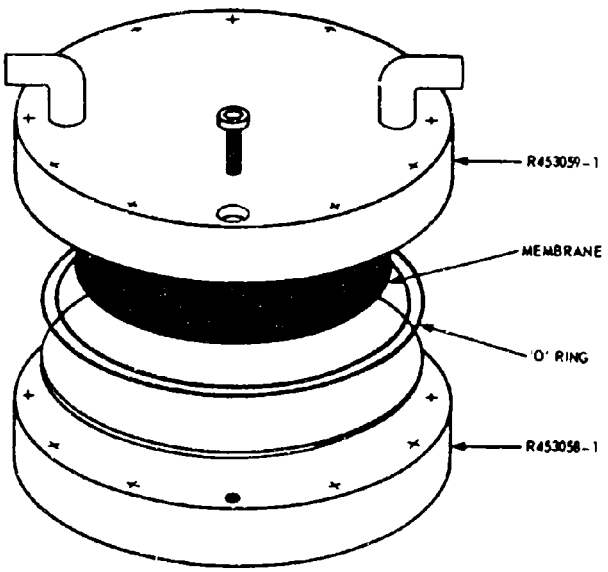

b) MEMBRANE CELL R453060-1

Figure 2. Reverse Osmosis Cells

Preparation of Casting Solution

Dissolve the magnesium perchlorate in the water. Pour this aqueous solution into the acetone contained in a 200-ml, screw-cap bottle. Add a magnetic stirring bar to this solution and, while stirring, slowly add the cellulose ester. Continue stirring, until solution is complete. With the bottle sealed, rotate on a roll mill for 12 to 14 hours. If at the end of this time there are air bubbles in the solution, place the capped bottle in a water bath for a few minutes at a temperature of 40 C. This casting solution is to be stored at a temperature of -10 to -15 C until needed for casting.

Casting of Membranes

Place two layers of electrical tape along each side of an acetone-cleaned glass plate which is approximately 8 x 8 inches. (The tape used was 3M Scotch Vinyl Plastic Electrical Tape No. 33.) The tape, approximately 0.007 inch thick, forms a casting barrier approximately 0.014 inch thick. Place the plate in the freezer and allow it to cool to -10 to -12 C. Pour a slight excess of the casting solution onto the plate so that it fills the depression made by the tape barrier. Draw a clean glass rod across the surface of the casting solution to form a layer of uniform thickness and then allow the casting solution to set for 4 minutes. After this period the plate is to be immersed in a quench bath (water at 0 C) for 45 minutes. During this immersion in the quench bath, the magnesium perchlorate is dissolved out of the film. It can be observed that a dense skin will form on the water-exposed side of the membrane. It was found that the best results were obtained when this skin was on the pressure side when the membrane was mounted in the reverse osmosis cell.

Formamide Method

Composition of Casting Solutions

(1) Cellulose Ester:	25 grams
(2) Acetone:	45 grams
(3) Formamide:	30 grams

Preparation of Casting Solutions

Place the solvent mixture in a clean 200-ml, screw-cap bottle containing a magnetic stirring bar. Slowly add the cellulose ester while stirring. After solution is complete, place the capped bottle on a roll mill and rotate for 12 to 14 hours.

Casting of Membranes

The glass plate is prepared and the casting solution is poured exactly as was done in the perchlorate procedure described above. After the film has been formed, allow it to set for 20 seconds at room temperature and then quench for 45 minutes in water at room temperature. As with membranes produced by the perchlorate method, the water side of the membrane is also the pressure side when the membrane is mounted in the reverse osmosis cell.

GENERAL PROCEDURE FOR ANNEALING MEMBRANES

Place several coins in the bottom of a petri dish to prevent the membrane from lying on the bottom. Similarly, coins are placed on the top of the membrane to prevent it from floating in the distilled water which is then poured into the dish until the water covers the membrane. Place the petri dish in a hot water bath and bring the temperature up to the annealing temperature (93 C) within 20 to 30 minutes and hold at this temperature for 10 minutes. Remove the dish from the water bath and allow its contents to cool to room temperature. The membranes should not be cut to the size for use in the cell until after they have been annealed because this process results in a shrinkage of about 10 percent.

STORAGE OF MEMBRANES

The membranes are to be stored in a 0.005 to 0.050 molar potassium acid phthalate buffer solution (pH = 5.000 ± 0.02 at 25 C).

ANALYSIS OF PRODUCT WATER

In the initial evaluations of membranes, the problem was simplified by the employment of an aqueous solution of sodium chloride and urea as a substitute for urine. To approximate the concentrations of these substances in urine, the simplified test solution had a urea concentration of 0.43 M and that of the sodium chloride was 0.38 M. To simplify the screening of membranes an analytical procedure was developed that determined the sodium chloride and urea concentrations by measuring the conductance and the refractive index of the solution. A detailed description of this method is given in appendix III. Excellent precision and accuracy were obtained when synthetic urine was examined but, when the method was used in analyzing for the salt and urea concentrations in urine or the product water from the processing of urine, the values obtained were 20 to 30 percent higher than those determined by the conventional quantitative wet chemistry methods for sodium chloride and urea.

Adequate precautions must be taken to prevent the product water from being contaminated by carbon dioxide in the air. Water absorbs carbon dioxide and this increases conductivity. For this reason, when using a conductometric method, the water must be saturated with carbon dioxide at a given temperature and the proper correction applied, or it must be protected from absorbing carbon dioxide. In the reverse osmosis system, the product was protected from carbon dioxide by sealing the receiver and admitting air only through a drying tube filled with Ascarite. However, in the case of urine, although the chief constituents were sodium chloride and urea, the many other contaminants present will lead to some error by this method. To determine the size of this error and to determine whether the method could be used as an empirical method to obtain a rough estimate of the purity of the product, the urea contents of several different urine solutions were analyzed by the diacetylmonoxime method and the results obtained were compared with those obtained by the conductivity-refractive index method. The results are summarized in table I.

In general, the diacetylmonoxime method gave urea concentrations approximately 0.7 (70 percent) times the values obtained by the conductivity-refractive index method. The higher values are caused by the presence of impurities in the urine other than urea. Passing the product water through a 0.45 μ Millipore filter or decolorizing it with activated charcoal did not cause significant differences in the refractive index. For synthetic solutions of known concentrations, the results obtained by the diacetylmonoxime method were about 10 percent low in urea content. Thus, some of the difference between the two methods is probably due to a tendency for the diacetylmonoxime method to give low results. Furthermore, the ratio of approximately 0.7 between the two methods tended to be maintained by a solution after it had been passed through the osmosis membrane. Since it would be expected that other impurities would be removed to a greater extent than urea, one might expect the ratio to change after purification by reverse osmosis. However, since the ratio is maintained, the percent rejection of urea determined by both methods was approximately the same and the conductivity-refractive index method is therefore a valid method for determining the percent rejection of urea even in urine solutions.

The results also show that the conductivity-refractive index method is accurate for synthetic urea-salt mixtures even though the results may be slightly high where additional impurities are present, such as in urine. Thus, in using this method for the analysis of purified urine solutions, the product water is purer than indicated by the analysis. However, the method is rapid and easy and therefore was used for initial evaluations. For definitive determinations of contaminants, conventional methods of water analysis were used.

TABLE I

COMPARISON OF ANALYSIS FOR UREA BY DIACETYLMONOXIME AND CONDUCTIVITY REFRACTOMETER METHODS

Solution	Urea Conc by Monoxime Method	Cond-Refr Method		Ratio of Urea Concentrations
		Urea Conc	Salt Conc	
Known 0.20 M $NaCl^+$ 0.30 M Urea	0.275 M	0.301 M	0.205 M	
Urine L	0.34 M	0.471 M	0.227 M	0.72
Urine M	0.29 M	0.366 M	0.223 M	0.79
Urine N, Raw	0.275 M	0.498 M	0.261 M	0.55
Urine N, Filtered through 0.2 μ Millipore	0.31 M	0.514 M	0.261 M	0.60
Urine N, Filtered through Whatman Filter Paper	0.32 M	0.504 M	0.261 M	0.635
Urine N, Decolorized with Charcoal	0.244 M	0.374 M	0.264 M	0.65
Urine Passed through Reverse Osmosis Membrane				
Solution 1	0.094 M	0.134 M	0.019 M	0.70
Solution 2	0.110 M	0.140 M	0.0039 M	0.786

Section III

RESULTS AND DISCUSSION

COMPARISON OF MELPAR AND COMMERCIAL MEMBRANES

To assess Melpar's procedures for casting cellulose membranes, several membranes were compared with commercially available reverse osmosis membranes. For the first approximation evaluation, synthetic urine, described on page 7, was used with a single reverse osmosis cell at a pressure of 1000 psi with the feed flow rate maintained at 200 ml per minute. The results are given in table II where it can be seen that, whereas there was no significant difference in the sodium chloride rejection, the Melpar membranes did result in an overall higher rejection of urea, particularly by the formamide membrane F-6 which was annealed at 85 C. Additional cellulose acetate membranes were cast by the formamide method, annealed at 85 C and tested under various conditions. In table III are summarized the results. It is to be noted that when urine was used, an adequate urea rejection was obtained only when urease was employed. When the synthetic urine was used, with the exception of one case, the urea rejection was of the same order of magnitude as that realized for sodium chloride. It very well may be that the low values obtained with urine are anomalous since the refractive index procedure was used in the urea determinations and the reading may have been significantly affected by other non-ionic urine constituents penetrating the membrane.

The one exception noted above (urea rejection 16%) was obtained with a membrane that had been stored in distilled water for several weeks. A second heat treatment failed to restore the original properties. For this reason, a study was made of membranes stored in various salt and buffer solutions to determine their stability. Membranes stored in a potassium acid phthalate-sodium hydroxide buffer at a pH of 5.00 would keep for more than a month.

The findings indicate that the cellulose acetate was probably degraded by bacteria or by an adverse pH. Since the medium was distilled water, the loss of rejection may have been due to bacteria. Treating the membrane with very dilute silver nitrate solution may protect it from bacterial action for prolonged periods. However, this approach has not been tested.

Passing urine through a charcoal bed prior to passage through the reverse osmosis system was effective in decolorizing the solution and removing odor; however, with more than one pass through the membrane, it is not required.

TABLE II

ORIGINAL SCREENING OF MEMBRANES

Membrane*	Annealing Temperature (C)	Percent Rejection NaCl	Percent Rejection Urea
MF-10-1	--	88	--
MF-10-1	84	79	23
U-75	--	40	8
U-80	--	24	6
U-81	--	90	28
U-84	--	81	27
P	84	86	38
F-1	83.0	88	--
F-2	82.5	76	20
F-3	83.5	75	28
F-4	83.0	79	24
F-5	83.5	49	19
F-6	85.0	94	45

*MF Membranes obtained from Desalination, Inc.
U Membranes obtained from Universal Water Co.
P Membranes cast at Melpar by the perchlorate method
F Membranes cast at Melpar by the formamide method

TABLE III

REJECTION RATES OF FORMAMIDE MEMBRANES

Starting Solution	Special Treatment	Percent Rejection NaCl	Percent Rejection Urea
Urine	Urease - charcoal	90	89
Urine	None	89	36
Urine	None	90	35
0.43 N urea +	0.38 N NaCl	98	94
0.43 N urea +	0.38 N NaCl	97	94
0.43 N urea +	0.38 N NaCl	96	92
0.43 N urea +	0.38 N NaCl	99	94
0.43 N urea +	0.38 N NaCl	84	16
0.43 N urea +	0.38 N NaCl	90	93
0.43 N urea +	0.38 N NaCl	90	82
0.38 M NaCl		88	--
0.43 M Urea		--	41

-- Data not available

The flow of water through the membrane is dependent upon the pressure differential and the concentration of the solution. Increasing the pressure from 1000 psi to 2000 psi will increase the flow rate by a factor of 1.5. The first pass of urine through the osmosis cell requires considerably more time than subsequent passes. Thus, in the system delivered, the first pass of 4000 ml of the urine mixture requires about 12 hours whereas the next two passes will be completed in 12 hours.

THE EFFECT OF ANNEALING TEMPERATURE AND pH OF STORAGE BUFFER SOLUTION

Several membranes were prepared under identical conditions and annealed at 79.5, 81.5, and 83.5 C for 45 minutes. The results obtained for these membranes are summarized in table IV. The storage of membranes at a pH of 6 results in a progressive deterioration of the membrane with time. This is evident from the decline in the rejection efficiency for both sodium chloride and urea.

TABLE IV

EFFECT OF ANNEALING TEMPERATURE AND pH

Annealing Temperature (C)	Storage Conditions	Percent Rejection NaCl	Percent Rejection Urea
79.5	No storage	94	39
	2 wk in pH = 6 buffer	83	26
	3-1/2 wk in pH = 6 buffer	68	12
81.5	No storage	86	27
83.5	No storage	94	34
	3-1/2 wk in pH = 5 buffer	94	25

In a second study of this problem, four cellulose acetate membranes were prepared under identical conditions by the formamide method and stored for up to 4 weeks in a potassium acid phthalate-sodium hydroxide buffer of pH 5. The buffer concentrations used in this study were 0.05 M, 0.005 M and 0.0005 M. After storage, the membranes were evaluated for their rejection of urea and sodium chloride from a solution containing 0.2 M sodium chloride + 0.3 M urea and from urine. About 140 ml was collected from a starting volume of 200 ml in each case. The results are shown in table V. Based on these data, annealed cellulose acetate membranes may be stored in 0.005 M or 0.0005 M postassium acid phthalate-sodium hydroxide buffer of pH 5 for at least a month without any significant deterioration in their rejection properties with respect to sodium chloride and urea.

TABLE V

EFFECT OF STORAGE OF MEMBRANES AT pH 5 ON THEIR REJECTION OF NaCl AND UREA

Membrane Treatment	Measured pH	Feed Solution 0.2 M NaCl + 0.3 M Urea		Feed Solution Urine	
		% NaCl Rejected	% Urea Rejected	% NaCl Rejected	% Urea Rejected
21 days in 0.05 M buffer	5.0	89.4	20.0	91.8	21.6
21 days in 0.005 M buffer	5.2	85.8	31.0	86.1	19.7
21 days in 0.0005 M buffer	5.4	92.2	28.0	94.0	30.7
28 days in 0.005 M buffer	5.2	91.2	30.0	—	—

TABLE VI

EFFECT OF ANNEALING CONDITIONS ON REJECTION RATE

Anneal Temp (C)	Anneal Time (min)	Conc Before Passing Membrane		After Passing Membrane		Percent Rejection	
		NaCl N	Urea N	NaCl N	Urea N	NaCl	Urea
93	10	0.200	0.300	0.0212	0.220	89.4	26.7
2nd pass		0.0212	0.220	0.0024	0.125	57.1	22.6
94	10	0.200	0.300	0.122	0.233	39.1	22.7
95	20	0.200	0.300	0.0056	0.161	97.5	46.2
97	10	0.200	0.300	0.0062	0.111	96.9	62.9

A further study of the effect of the annealing temperature on membrane performance was carried out using membranes prepared by the perchlorate method. The membranes were annealed at 93, 94, and 97 C for 10 minutes and at 95 C for 20 minutes. The results obtained from the evaluation of these membranes are shown in table VI.

These results indicate that the annealing time and temperature is very important in determining the rejection rate and the product flow rate of the membranes. The results obtained from the membrane annealed for 10 minutes at 94 C are unexpectedly low, probably due to an imperfection in the membrane. Although good rejection was obtained with the membrane annealed at 97 C for 10 minutes, the rate of flow of product water through the membrane was significantly decreased. Therefore, in selecting annealing conditions, a tradeoff must be made between flow rate and rejection rate.

During his final consulting session in the program, Dr. Sourirajan said he had developed a membrane with greatly improved flow properties but with very small pores so that high rejection rates could be obtained. He anticipates publishing his findings at an early date.

UREA REMOVAL BY COMPLEX FORMATION

Since urea removal was the most difficult problem an investigation was made to determine whether the urea would complex to form larger molecules which would be easier to remove. A search of the literature indicated that a number of complexes is indeed formed with urea, and so a number of these complexing agents was investigated. Because the amount of additive was limited by the terms of the program to 4 g/l, we decided that the complexing agent should be added after the first pass so the purification processes could be limited to two passes.

In the initial study, five compounds were added to the urine at a concentration of 4 g/l to try to complex the urea and thereby increase the membrane rejection rates for urea. The complexing agents used were silver nitrate, chromous chloride, ferric chloride, magnesium chloride, and ferrous sulfate. After treatment, the solutions were filtered through a Whatman No. 1 filter paper and the filtrate was passed through the reverse osmosis system. The data is summarized in table VII. An examination of this data will show that no drastic reduction in urea concentration occurred. The average rejection rate obtained for all of the additives was 35 percent, roughly comparable to the 30 percent rejection of urea obtained with this type of membrane without additives.

TABLE VII

REJECTION RATES FOR UREA AFTER BEING COMPLEXED

Chemical Added	Feed Solution Concentration	Product Solution Conc: Apparent NaCl Conc	Product Solution Conc: Urea Conc	% Urea Passed	Percent Rejection
$AgNO_3$	urine - 0.27 N urea	0.0462 N	0.190 N	70.4	29.6
$AgNO_3$	0.014 N NaCl + 0.222 N urea	0.0110 N	0.152 N	68.5	31.5
$CrCl_2$	urine - 0.27 N urea	0.0437 N	0.181 N	67.0	33.0
$CrCl_2$	0.019 N NaCl + 0.251 N urea	0.0211 N	0.154 N	61.4	38.6
$FeCl_3$	urine - 0.27 N urea	0.0362 N	0.161 N	60.4	39.6
$FeCl_3$	0.038 N NaCl + 0.226 N urea	0.0357 N	0.157 N	69.5	30.5
$MgCl_2$	urine - 0.27 N urea	0.0833 N	0.144 N	53.3	46.7
$MgCl_2$	0.00041 N NaCl + 0.127 N urea	0.0053 N	0.083 N	65.4	34.6
$FeSO_4$	urine - 0.27 N urea	0.0429 N	0.173 N	64.1	35.9
$FeSO_4$	0.00041 N NaCl + 0.127 N urea	0.0020 N	0.075 N	59.1	40.9

These results can probably be explained by the high dissociation constants for the urea complexes. For example, the complexing reaction with ferric chloride can be shown as

$$FeCl_3 + 6\ CO(NH_2)_2 \rightleftharpoons FeCl_3 \cdot 6\ CO(NH_2)_2$$

Upon removal of urea by the membrane, additional free urea is formed by dissociation, i.e., shifting of the above reaction to the left.

In an extension of the effect of the addition of complexing agents, the following compounds were evaluated: tetrahydronaphthalene, tartaric acid, p-dimethlamino-benzaldehyde, oxalic acid, formaldehyde, p-benzoquinone, 1,2-napthoquinone, acetic acid, and calcium chloride. Each of these chemicals was added at a concentration of 4 g/l except for oxalic acid which was added at a concentration of 2.5 g/l. The complexing agent was added to the raw urine after which the urine was filtered first through a Whatman filter No. 1 and then through a Millipore filter with a porosity of 0.45 μ. The filtrates were then passed through the reverse osmosis system. Concentrations were determined by both the conductivity-refractive index method and by the monoxime method.

None of the additives showed promise except oxalic acid. The results obtained using solutions containing sodium chloride and urea are shown in table VIII. These show that although a slight improvement was obtained in the rejection of urea, the additive had a very adverse effect on the rejection of sodium chloride. In addition, the low pH (pH 5.0 is neutral environment for membranes) of the resulting solutions may accelerate the deterioration of the membrane. Thus, although the additive could be added after the first pass and after the bulk of the sodium chloride has been removed, the approach did not appear sufficiently promising to warrant further effort.

CHEMICAL MODIFICATION OF CELLULOSE ACETATE MEMBRANES

In view of the failure of complex formation to significantly increase the rejection of urea, attention was turned toward the modification of the membranes as a means of increasing the rejection.

According to the theory of Sourirajan, a thin layer of pure water, which is due to preferential adsorption, forms at the surface of the membrane. This layer has a thickness designated by "t" and is only a few molecules thick. The amount of salt or other solutes passing through the membranes is dependent upon this thickness (which in turn is dependent on the relative adsorption potential of pure water and solute for a particular membrane) and on the diameter of the pores "d" in the membrane. Then by increasing "t" or decreasing "d," the rejection rate of the

TABLE VIII

EFFECT OF OXALIC ACID FOR UREA REMOVAL

Amt of Oxalic Acid Added g/1	Conc Before Passing Through Membrane			Percent Rejection	
	pH	NaCl N	Urea N	NaCl	Urea
None (control)	7.4	0.200	0.300	97.5	46.2
2.0	2.0	0.200	0.300	84.0	45.9
4.0	1.8	0.200	0.300	72.7	44.2
6.0	1.5	0.200	0.300	46.7	51.7
8.0	1.4	0.200	0.300	31.0	56.7

Amt of Oxalic Acid Added g/1	Conc After Passing Through Membrane			Percent Rejection	
	pH	NaCl N	Urea N	NaCl	Urea
None (control)	5.8	0.0056	0.161	97.5	46.2
2.0	2.2	0.034	0.162	84.0	45.9
4.0	2.1	0.055	0.167	72.7	44.2
6.0	1.8	0.107	0.145	46.7	51.7
8.0	1.6	0.138	0.130	31.0	56.7

membrane will be improved. However, by decreasing "d," the flow rate through the membrane will be decreased. As stated above, Sourirajan is now working on a method to increase the number of pores in a given membrane so that "d" can be decreased to obtain high rejection rates, and reasonable flow rates will still be maintained. These conclusions have been borne out by the studies conducted during this program on annealing temperatures and times. On the other hand, the same objective might be attained by increasing the thickness "t" of the pure water layer. This might be accomplished by making the membrane less adsorptive toward the solutes in the urine. This is the approach that was pursued for the balance of this program.

An attempt was made to form a film of an ether/ester of cellulose. Cellulose acetate has been the most attractive of the current state-of-the-art membranes with a degree of substitution of approximately 2.5. Theoretically it is possible to obtain a derivative which has up to 3.0 groups of an ether linkage per anhydroglucose unit. It was felt that this substitute should be as nonpolar as possible and thus the benzyl group was the first to be investigated. It was intended to later investigate the ethyl and methyl ethers, but time did not permit attaining this goal.

The first approach was to start with a cellulose acetate membrane and to carry out the substitution during the annealing operation. The details of these syntheses are given in appendix I, section A. No suitable membranes were obtained.

The next approach was to benzylate cellulose acetate and then form membranes from the product. Several reactions were tried, as described in appendix I, section B, but all of the products obtained were so insoluble that no membranes could be cast. A total of 94 solvent systems was investigated (see appendix II), but none of these were adequate to obtain solutions sufficiently concentrated for the production of membranes. At this point during the reaction, the ester linkage was broken and the products were essentially cellulose with a small degree of substitution of benzyl cellulose.

The final approach was to form the benzyl ether first and then acetylate the resulting product. Alkali cellulose was prepared from alpha cellulose and, after drying, was reacted with benzyl cellulose (for representative procedures, see appendix I, section C). The product was separated and dried and acetylated with a mixture of acetic anhydride and glacial acetic acid, using sulfuric acid as the catalyst. The desired product was obtained.

Casting a satisfactory film presented a major problem since most films formed were too brittle or too weak. Perhaps a lower degree of benzylation would have produced a satisfactory film. A film was finally cast by mixing a solution of 2.0 grams of benzyl cellulose acetate (Product 1397-39-1) dissolved in 5.0 grams of dioxane with 15.0 grams of cellulose acetate dissolved in 63.0 grams of acetone annealed at 84 C for 10 minutes. It gave a rejection rate of 59 percent for sodium chloride and 8 percent for urea. Although this membrane was decidedly inferior to those previously prepared, the low rejection rate may have been due to imperfections in the film.

Although no strong positive results have been obtained with these derivatives, it is felt that further work should be done in this direction and that at least the ethyl cellulose acetate should be prepared and tested. Experience with the benzyl derivative indicates that the easiest mode of synthesis would be to form the ethyl cellulose ether to a degree of substitution of 0.2 to 0.5 group per anhydroglucose unit and then acetylate the product to the highest possible extent with glacial acetic acid-acetic anhydride reagent using sulfuric acid as the catalyst. This derivative should form better films than the benzyl cellulose acetate.

At the end of the program, regular cellulose acetate membranes were cast by the perchlorate method, and the system, figure 1, was run for five days purifying a mixture of 2400 ml of urine and 1600 ml of dehumidification or wash water each day. Three passes through the system were required to obtain a satisfactory product. The final product was filtered through a sterilized Millipore filter with a pore diameter of 0.45 μ to remove all bacteria, and the product was collected in a sterile container. A 90% yield was obtained. Thus, three passes would be required to obtain more than 90% urea rejection.

The results obtained in the initial attempts to obtain membranes by the perchlorate method were disappointing. However, by adding more heaters to the annealing bath so that the annealing temperature could be attained in 20 to 30 minutes and in annealing at 95 C for 10 minutes, membranes were obtained which had a salt rejection of about 90 percent and a urea rejection of about 60 percent, with a flow rate through the membrane of approximately 25 $l/ft^2/day$. Thus, three passes would be required. The three passes can be carried out in 24 hours. About 12 hours are required for the first pass, but the other two passes can be carried out in a total of 12 hours. A prefilter is placed in the return line during the first pass to remove solids which precipitate out during the pass. One attempt to use a 0.45-μ Millipore filter in the return line caused a pressure buildup which broke the flowmeter, so, if further attempts are made to put a Millipore filter in the return line, it is recommended that the flowmeter be first removed from the system or modify the present system with the filter installed on the inlet side of the flowmeter. Since the flowmeter, as shown in the present system, would be subjected to the pump pressure, caution should be exercised to prevent clogging of the prefilter.

Analysis of the product obtained gave the following results:

Conductivity	61 micromhos
pH	7.1
Color	Less than 15 chloroplatinate units
Turbidity	Less than 25 Jackson units
Odor	Acceptable
Taste	Acceptable
Bacteria count	4/ml
COD	235
Urea	92.2-percent rejection

Although the COD was high, it can be reduced to the acceptable level, 100 mg/liter max., by reclaiming only 90% of the input on each pass. To obtain the required 90% overall yield, the residue (10%) from the first pass should be discarded and the residue (10%) from each subsequent pass added to the next input.

SECTION IV

CONCLUSIONS

- Potable water can be obtained from a mixture of urine and wash water using three passes through the cellulose acetate membrane described herein.

- In the preparation of cellulose acetate membranes the annealing time and temperature are extremely important in determining rejection properties and flow rates.

- The additives tested were not effective in removing urea from urine solutions.

- A major problem in building a flight-qualified prototype is to obtain a lightweight pump capable of about 2000 psi with relatively low flow rates. Such pumps have been developed for aircraft, but they are not directly suitable for reverse osmosis systems because they utilize hydraulic fluid for lubrication.

- For prolonged life, the membranes developed in this program must be stored in buffer solutions of pH 5.00.

- Activated charcoal will aid in urine purification.

- A rapid method for analyzing reclaimed water by conductance and refractive index measurements has been developed.

- An ethyl cellulose acetate membrane should be prepared and evaluated to determine if an improved urea rejection can be obtained.

- For a flight-qualified unit, tubular membranes will be required to give satisfactory area-volume-weight ratios.

APPENDIX I

A. PREPARATION OF BENZYL CELLULOSE-CELLULOSE ACETATE DERIVATIVES

Preparation 1397-20

The membrane was cast by the perchlorate method and soaked in 2.0 N sodium hydroxide in a petri dish for 5 minutes. The membrane was removed and washed with xylene. It was then transferred to a clean petri dish, covered with xylene, and 5 ml of benzyl chloride was added. The film was annealed in this mixture by heating to 90 C and holding at this temperature for 10 minutes.

Preparation 1397-21

A cellulose acetate membrane was soaked for 5 minutes in 0.1 N sodium hydroxide. The membrane was removed from the solution and rinsed with xylene to remove the excess water and then was placed in a petri dish and covered with xylene. The petri dish was placed in a larger dish containing approximately 1 liter of xylene and treated with 5 ml of benzyl chloride. The large dish was placed in the water bath, heated to 95 C, and held at this temperature for 10 minutes.

Preparation 1397-22

A 25.0-gram portion of cellulose acetate was treated with 75 ml of 2 N sodium hydroxide. The mixture was filtered through a Buchner funnel using a Whatman No. 41 filter paper. The solid was transferred to a 1000-ml, round-bottomed flask equipped with a water trap and reflux condenser. After refluxing for 6 hours, a total of 34.8 ml of water was collected in the water trap. The water trap was removed, the mixture was treated with 10 ml of benzyl chloride and again refluxed for 2 hours. The resulting mixture was cooled to room temperature and then filtered through a Buchner funnel using a Whatman No. 41 filter paper. The product was washed on the funnel with distilled water until the filtrate was neutral to remove the excess sodium hydroxide. The product was air dried overnight.

A 25.0-gram portion of cellulose acetate was moistened with 2 N sodium hydroxide and the resulting mixture was filtered through a sintered glass filter funnel of medium porosity. The solid was washed on the filter, first with about 200 ml of methanol and then with about 200 ml of benzene. The solid was transferred to a 1000-ml, three-necked, round-bottomed flask equipped with a reflux condenser, stirrer, and glass stopper. A 500-ml portion of benzene was added and the resulting slurry was treated with 10 ml of benzyl chloride. The mixture was heated to boiling with constant stirring for 30 minutes. The reaction mixture was filtered through a Buchner funnel using Whatman No. 54 filter paper. The solid was washed with about 2 liters of distilled water. The product was air dried.

Product 1397-29

A 25.0-gram portion of cellulose acetate was slurried with a 1 N solution of sodium hydroxide. The mixture was filtered through a sintered glass filter funnel of medium porosity and washed on the funnel with about 200 ml of methanol. The solid was transferred to a 1000-ml, three-necked, round-bottomed flask equipped with reflux condenser and stirrer and slurried in 300 ml of benzene. The slurry was treated with 2 ml of benzyl chloride and heated to boiling and refluxed for 30 minutes. The product was isolated by filtering through a Buchner funnel using a Whatman No. 54 filter paper. The product was washed on the funnel with distilled water and air dried overnight.

B. PREPARATION OF BENZYL DERIVATIVE OF ALKALI CELLULOSE

Preparation of Alkali Cellulose

A 200-gram portion of alpha cellulose was slurried with distilled water in the Waring Blender. The slurry was filtered through a Buchner funnel. The resulting solid was transferred to a beaker and allowed to stand in a 21-percent solution of sodium hydroxide for 17 hours at room temperature. The mixture was filtered and the solid was allowed to dry for two days at room temperature. The product was transferred to a screw-cap, wide-mouth jar and stored in the freezer until ready to use.

Product 1397-35-1

A 50.0-gram portion of alkali cellulose was transferred to a 1000-ml, single-necked, round-bottomed flask equipped with a trap and reflux condenser. 500 ml of toluene was added and the mixture was heated under reflux until the bulk of the water had been removed. The resulting slurry was treated with 100.0 grams of benzyl chloride and heated under reflux for 4 hours.

The product was separated by filtration through a sintered glass filter funnel of coarse porosity and washed on the funnel with distilled water until the filtrate was neutral. 400 ml of distilled water was acidified with 5 drops of 1:1 sulfuric acid. Suction was removed from the funnel, the solid on the funnel was slurried with 500 ml of distilled water, and 200 ml of the acidified water was added. Suction was applied to remove all of the wash from the funnel. This washing operation was repeated with another 500 ml of distilled water and the remaining 200 ml of acidified water. Again suction was applied to remove excess water.

The product was transferred to a petri dish and allowed to dry in air.

Product 1397-35-2

A mixture of 100.0 grams alkali cellulose, 50.0 grams benzyl chloride and 600 ml benzene was placed in a 2000-ml, round-bottomed, three-necked flask equipped with stirrer, water trap, and reflux condenser and heated with a mantle. The mixture was heated under reflux for 6 hours during which time 48.0 ml of water was collected in the trap. The product was collected on a sintered glass filter funnel of coarse porosity and washed on the funnel with distilled water. The product was air dried overnight at room temperature and then dried in an oven for 4-1/2 hours at 55-60 C. Analysis showed the product to contain 41.3 percent carbon and 6.69 percent hydrogen.

C. PREPARATION OF ACETATE DERIVATIVE OF BENZYL CELLULOSE

Product 1397-36

A mixture of 10 grams of benzyl cellulose (Product 1397-35-1), 74.0 grams of acetic anhydride, 154.9 grams of glacial acetic acid and 0.2 gram (12 drops) of concentrated sulfuric acid were slurried in a 500-ml, three-necked, round-bottomed flask equipped with stirrer, thermometer, and reflux condenser. The flask was immersed in an ice bath and the temperature was maintained at 10 C. The mixture was stirred for 19 hours and kept below 20 C by moving the apparatus to the cold room at 5 C. At the end of this length of time all solids in the flask had dissolved. The reaction mixture was poured slowly into 1200 ml of distilled water with constant stirring. The solid white product which formed was separated by filtration through a Buchner funnel using a Whatman No. 41 filter paper. In this preparation the product had been poured into the water too rapidly and the precipitate which formed was very fine and difficult to filter. Thus, the solids were removed by using the centrifuge and the product was washed in the centrifuge tubes. At the end of the washing cycle, the pH of the filtrate was 5.6. The product was heated for 6 hours under vacuum at 60 C. Since it was not dry at the end of this time, it was heated overnight in the circulating oven to 80 C.

Product 1397-37-1

A mixture of 10.0 grams of benzyl cellulose (Product 1397-35-2), 70.0 ml of acetic anhydride, 150.0 ml of glacial acetic acid, and 0.4 ml of concentrated sulfuric acid was placed in a 500-ml, three-necked, round-bottomed flask equipped with thermometer, stirrer, and reflux condenser. The flask was placed in an ice bath and the benzyl cellulose was added slowly with stirring maintaining the temperature between 5 and 15 C. The reaction mixture was stirred at this temperature for 70 hours in the cold room. The reaction mixture was allowed to warm to room temperature. The reaction was poured into 4000 ml of distilled water with constant stirring. Separation was attempted by filtration through Whatman No. 1 filter paper

on a Buchner funnel, but the precipitate was too fine to filter. The product was separated in the centrifuge and washed until the supernatant liquid in the centrifuge tube had a pH of 5.6. The product was air dried at room temperature for 3 days and placed overnight in the oven at 80 C.

Product 1397-37-2

A mixture of 50.0 grams of alkali cellulose (1397-35-1) and 500 ml of benzene was refluxed in a 1000-ml, round-bottomed flask equipped with a water trap and reflux condenser to remove the water from the mixture. The mixture was treated with 50.0 grams of benzyl chloride and heated under reflux for 4 hours. The reaction mixture was transferred to a beaker, the solvent decanted off and then 500 ml of distilled water was added. This mixture was allowed to stand at room temperature for 36 hours. The product was isolated by filtration through a Buchner funnel using a Whatman No. 1 filter paper and washed on the funnel until the filtrate was neutral. The product was dried by heating at 45 C for 2 hours.

Product 1397-38-1

A mixture of 10.0 grams of benzyl cellulose (Product 1397-37-2), 150 ml of glacial acetic acid, and 24 drops of concentrated sulfuric acid was placed in a 500-ml, three-necked, round-bottomed flask equipped with thermometer, dropping funnel, and stirrer. Acetic anhydride (70.0 ml) was added dropwise to the reaction mixture from the funnel with constant stirring at such a rate that the temperature of the reaction mixture did not exceed 30 C. After the addition was complete, the reaction mixture was stirred at room temperature for an additional 2 hours and allowed to stand over the week-end at room temperature. The reaction mixture was slowly heated to 55 C with constant stirring and, after cooling, was slowly poured into 3500 ml of distilled water at 50 C with constant stirring. Stirring was continued for an additional 30 minutes. The product was separated by filtration through a Whatman No. 1 filter paper in a Buchner funnel. The filter cake was washed on the funnel with distilled water until the filtrate was neutral. It was then transferred to a pyrex dish and dried overnight at 45 C. The resulting product contained 48.5 percent carbon and 5.81 percent hydrogen.

Product 1397-39-1

A 200.0-gram portion of alkali cellulose (Product 1397-35-1) was placed in a 4000-ml, single-necked, round-bottomed flask equipped with reflux condenser and water trap. A 2500-ml portion of benzene was added and the mixture was heated under reflux for 2 hours to remove the water. The mixture was then treated with 200 ml of benzyl chloride and heated under reflux for 5 additional hours. The reaction mixture was allowed to cool, 1500 ml of distilled water was added with constant stirring, and the mixture was allowed to stand at room temperature overnight.

The supernatant liquid was poured off and 3000 ml of distilled water was added with stirring. The mixture was allowed to settle and again the supernatant liquid was discarded. This washing procedure was repeated twice more. The product was collected on a Buchner funnel using a Whatman No. 1 filter paper and washed on the funnel with water at about 50 C until the filtrate was neutral. The product was transferred to a dish and dried overnight in a forced air oven at 45 C.

The product was then transferred to a 4000-ml, three-necked, round-bottomed flask equipped with a thermometer, electric stirrer, and dropping funnel. Glacial acetic acid (1000 ml) and 4 ml of sulfuric acid were added to the flask with constant stirring. A 280-ml portion of acetic anhydride was added slowly to the slurry by means of the dropping funnel with constant stirring. After the addition was complete, the reaction mixture was heated to 70 C, allowed to cool to 50 C, and poured into 7000 ml of warm (50 C) distilled water. The mixture was thoroughly stirred and allowed to settle overnight. The supernatant liquid was decanted off and the remaining slurry was filtered through a Whatman No. 1 filter in a Buchner funnel. The product was washed on the funnel until all trace of acid had been removed and dried overnight in a forced air oven at 45 C.

APPENDIX II

SOLVENT SYSTEMS TRIED WITH BENZYL CELLULOSE DERIVATIVES

1. 25% Ethanol - 75% Acetone
2. 25% Ethyl Acetate - 75% Acetone
3. 25% Dichloroethylene - 75% Acetone
4. 25% Butyl Acetate - 75% Acetone
5. 25% MEK - 75% Acetone
6. 25% 1,2-Dichloroethane - 75% Acetone
7. 25% Formamide - 75% Acetone
8. 25% Tetrahydrofuran - 75% Acetone
9. Dimethylformamide - Heat - Acetone
10. Dimethylsulfoxide - Heat - Acetone
11. Dioxane - Heat - Acetone
12. Chloroform
13. Ethyl Ether
14. Acetone
15. Formamide and Acetone
16. Ethyl Acetate
17. Ethanol and Acetone
18. Isopropyl Alcohol
19. Butyl Acetate, Acetone, Methylene Chloride
20. Acetonitrile and Acetone
21. Toluene and Acetone } + Ethanol
22. Toluene and Acetone } + Ethanol
23. Ethylenediamine plus Ethanol
24. Isopropyl - Acetate plus Acetone
25. 2-Methoxy Ethyl Acetate plus Butyl Acetate plus Acetone plus Methylene Chloride
26. Acetic Acid plus Acetone
27. α Toluenethiol plus Acetone

28. Toluene, Acetone, Alcohol, Monochlorobenzene plus Heat

29. Butyl Acetate, Toluene, Methylene Chloride, Acetone plus Heat

30. Butyl Acetate, Toluene, 2-Methoxy Ethyl Acetate, Acetone, Alcohol plus Heat

31. Butyl Acetate, Toluene Acetone, Alcohol plus Heat

32. Butyl Acetate, Acetone, Methylene Chloride plus Heat

33. (25% Butyl Acetate, 75% Acetone) (Tetr rofuran, 25%, and 75% Acetone) plus MEK plus Ethyl Acetate plus Heat

34. N-Hexane, Acetone, Toluene plus Heat

35. Toluene, Dichlorethane, Acetone

36. Alcohol, Toluene

37. Ethyl Acetate 25%, 75% Acetone, Toluene, 1,4-Dioxane

38. Trichloroacetic Acid, Acetone plus (Toluene)

39. Alcohol, Phenol, Acetone plus Heat

40. Aniline, 25% Ethanol, 75% Acetone plus Heat

41. Furfural, Toluene, Acetone plus Heat

42. Carbon Tetrachloride, Toluene, Acetone

43. Kerosene, Toluene, Butyl Acetate

44. Turpentine, Acetone, Tetrahydrofuran, 25% Ethyl Acetate, 75% Acetone

45. Paint Thinner, Alcohol, Toluene

46. Blending Thinner (Dupont), 25% Formamide, 75% Acetone

47. Carbon Disulfide, Toluene

48. 2-Methoxy Ethyl Acetate, Dupont Thinner

49. Acetic Acid, Acetone, Toluene, Alcohol

50. Hot Methanol

51. Hot Acetic Acid, Hot Methanol

52. Ethyl Ether, H_2O

53. Benzyl Chloride, Alcohol

54. Benzyl Chloride, Chloroform

55. Benzyl Chloride 3 ml, Ethanol 2 ml plus Heat

56. Dilute H_2SO_4, Acetic Acid - Dissolved

57. Dilute H_2SO_4, Acetic Acid plus Acetone

58. Dilute H_2SO_4, Acetic Acid Anhydride, Ethanol

59. HCl, Acetone

60. H_2SO_4, Acetic Acid, Acetic Anhydride - Dissolved plus H_2O

61. Ethylene Glycol Monomethyl Ether, Heat - Toluene

62. N-Amyl Alcohol - Toluene - Acetic Acid - Diluted H_2SO_4

63. Mixture in Bottle - Acetic Anhydride plus Heat

64. Ethyl Oxalate - Heat - Toluene - Heat - Acetic Acid - Heat

65. Benzyl Alcohol - Diluted H_2SO_4

66. Triethyl Phosphate - Heat, Alcohol, Acetic Acid - Heat

67. Nitrobenzene, Benzyl Chloride, Heat, Toluene, Heat

68. Nitrobenzene, Heat, Ethanol, Heat

69. Nitrobenzene, Heat, Acetone, Heat

70. Tetraethylammonium Hydroxide (10% in H_2O), Acetone, Acetic Acid, Benzyl Chloride, Heat

71. Diethylene Glycol, Heat, Ethyl Ether

72. Nitrobenzene, Ethanol, Toluene, Acetic Acid, Acetone

73. Benzyl Chloride, Ethanol, Butyl Acetate, Acetone, Toluene, Ethyl Acetate

74. Toluene, Ethyl Acetate, Tetrahydrofran, Acetone, Methylene Chloride

75. Dimethyl Sulfoxide, Ethanol, Methylene Chloride, Acetone

76. Dimethylformamide, Acetone, Ethanol, Isopropyl Acetate, Isopropyl Alcohol

77. Hot Acetic Acid, Ethylene Glycol Monomethyl Ether, Ethanol, Benzyl Chloride

78. Benzyl Chloride, Toluene, Benzene, Methanol

79. Acetone, Benzyl Chloride, Benzene

80. Mg $(CLO_4)_2$, Acetone, Dimethyl Sulfoxide

81. Acetone, Benzyl Chloride, Ethanol, Ethylene Glycol Monomethyl Ether, Dimethyl Sulfoxide

82. Toluene, Butyl Acetate, Acetone, Acetic Acid

83. Dimethyl Sulfoxide, Acetone

84. Dimethylformamide, Dimethyl Sulfoxide, Acetone

85. Formamide, Acetone, Dimethyl Sulfoxide

86. Ethanol, Benzyl Chloride, Acetone, Dimethyl Sulfoxide

87. Tetrahydrofuran, Methylene Chloride, Acetone, Benzyl Chloride

88. Ethanol, Dimethyl Sulfoxide, Isopropyl Alcohol

89. Acetone, Nitrobenzene, Toluene, Dimethyl Sulfoxide

90. Dimethyl Sulfoxide, Benzyl Chloride

91. Diethylene Glycol Monobutyl Ether, Dimethyl Sulfoxide, Acetone, Heat, Benzyl Chloride

92. 2-(Benzyloxy) Ethanol, Heat, Diethylene Glycol Monobutyl Ether, Benzyl Chloride, Heat

93. Mixed, Acetone, Dimethyl Sulfoxide, Benzyl Acetate

94. 2-(Benzyloxy) Ethanol, Dimethyl Sulfoxide

APPENDIX III

ANALYSIS OF URINE FOR SALT AND UREA BY CONDUCTANCE AND REFRACTIVE INDEX MEASUREMENTS

This method was originally devised for the analysis of mixtures of sodium chloride and urea which were used in the evaluation of reverse osmosis membranes. Upon further consideration of the method, it was also found adequate for determining the salt and urea concentrations in urine. The analytical method has been successfully used for determining the percent rejection of salt and urea upon passing urine through reverse osmosis membranes.

Composition of Urine

Although the composition of urine varies from person to person and from day to day, it is possible to give an approximate composition for a typical urine specimen. Based on analytical data (refs 5, 6), the molarities of the main organic constituents are approximately 0.35 M urea, with the next most important component being 0.01 M creatinine. Within an accuracy of about five percent, urea may therefore be considered on a molarity basis as the only organic constituent of urine.

The situation is slightly more complex for the electrolyte components of urine. Typical normalities for these components are: sodium 0.13 N, potassium 0.043 N, ammonium 0.03 N, calcium 0.007 N, magnesium 0.006 N, chloride 0.14 N, sulfate 0.036 N, phosphate 0.019 N, and bicarbonate 0.016 N. The normality of the total salt concentration, obtained by adding the normalities of the positive or negative ions, is approximately 0.21 N.

Conductance Measurements

It has been possible to analyze urine solutions, before and after passing through a reverse-osmosis membrane, by measuring the conductance and refractive index. First, let us consider the factors which affect the conductance. It can be shown (ref 7) that the normality, N, of a single component salt solution is given by the relationship

$$N = \frac{1000\ KL}{\Lambda} \qquad (1)$$

in which

K = cell constant of the conductivity cell

L = measured conductance of the solution in mhos

Λ = equivalent conductance of the salt.

For strong electrolytes, such as sodium chloride and potassium sulfate, the equivalent conductance approaches a limiting value, Λ_0. Therefore, the normality of a dilute solution of a strong electrolyte is essentially directly proportional to the conductance of the solution. For example, the equivalent conductance of a 0.001 N solution of sodium chloride at 25 C is 123.7, whereas Λ_0 = 126.5 (sodium chloride at 25 C). Therefore, for concentrations lower than 10^{-3} N, the error introduced by the nonlinearity of the conductance is small. In the event that more accurate results are desired, the equivalent conductance can be plotted against concentration and the results read directly from the graph.

In dilute solutions, the equivalent conductance is the sum of the ionic conductances of the individual ions present in the solution. Let us consider the main ions present in urine. At 25 C the ionic conductances at infinite dilution are as follows: Na^+ = 50.11, K^+ = 73.52, Cl^- = 76.34, and 1/2 SO_4 = 79.8. Upon taking into consideration the relative concentrations of these ions in urine, the average equivalent conductance at infinite dilution for the composite solution = 132.8. The corresponding value for sodium chloride is 126.5. Thus, only a 5-percent error will be introduced by considering all the electrolytes in urine as sodium chloride. If greater accuracy is desired, suitable corrections can be made.

The contribution to the conductance from urea is negligible, since the equivalent conductance of a 0.03 N solution of urea is only 0.07 (ref 8), which is only 0.05 percent of the value for sodium chloride. Since other organic components of urine are present in extremely small amounts, their contribution to the conductance of the solution is also negligible.

Based on the above discussion the conductivity of a dilute urine solution depends mainly on the total salt concentration, which may be determined within an accuracy of 5 percent by considering the salt content as NaCl.

In our experimental setup, conductivity measurements were performed at 35 C because of the greater ease for maintaining constant temperature. The cell constant was determined to be 0.3806, and the equivalent conductance for NaCl, Λ_{NaCl}, equal to 145.6. Then from equation (1)

$$N_{NaCl} = \frac{1000 \times 0.3806}{145.6} L = 2.6L \qquad (2)$$

where L, the measured conductance, is expressed in mhos.

In practice, urine solutions need to be diluted by a factor of about 100 to reduce the total salt concentration to below 1×10^{-3} N. After passing the urine through the membrane, assuming a salt rejection of about 90 percent, the solution

needs to be diluted by a factor of about ten to reduce the normality to approximately the same level. Introducing the dilution factor, f, into equation (2) we obtain

$$N_{NaCl} = 2.6\ fL \qquad (3)$$

In addition, a correction of about 3 μmhos needs to be subtracted from the value of L to correct for conductivity of water. It should be borne in mind that solutions for conductivity measurements should not be stored in soft-glass bottles since significant amounts of salt may be absorbed from the glass. Thus, all conductivity type water and solutions for conductivity measurement must be kept in pyrex containers.

Refractive Index Measurements

Refractive index determinations were performed using a Brice-Phoenix Differential Refractometer. Measurements versus water at 436 mμ were made on various concentrations of aqueous solutions of sodium chloride and urea, verifying the proportionality between the refractive index difference and the concentration. The following relationships were established for the refractometer.

$$N_{NaCl} = 0.0977\ (M_w - M_s) \qquad (4)$$

$$N_{urea} = 0.1129\ (M_w - M_s) \qquad (5)$$

where M_w = instrument reading for water, and M_s = instrument reading for solution. * The refractive index difference n can be calculated according to the equation:

$$n = k(M_w - M_s) \qquad (6)$$

where k is the calibration constant for the selected wavelength which equals 1.03×10^{-3} in our case. Since we are interested only in the normalities of NaCl or urea, the absolute value n of the refractive index difference need not be evaluated.

The assumption was made that the refractive-index difference relative to water for a solution containing both NaCl and urea was the sum of the refractive-index differences for solutions containing only NaCl or urea. Thus

$$n_{(NaCl + urea)} = n_{NaCl} + n_{urea} \qquad (7)$$

*In our case we were making measurements only with the water in the side of the cell towards the lamp housing.

Combining equations (6) and (7) we obtain

$$(M_w - M_s)_{(NaCl + urea)} = (M_w - M_s)_{NaCl} + (M_w - M_s)_{urea} \qquad (8)$$

Upon substituting equations (4) and (5) into equation (8) and solving for N_{urea} we obtain

$$N_{urea} = 0.113\,(M_w - M_s)_{(NaCl + urea)} - 1.16N_{NaCl} \qquad (9)$$

For urine, it is necessary to dilute the solution by a factor of 5 so that accurate measurements of $(M_w - M_s)$ can be made. In other cases, such as for measurements of even more concentrated solutions, dilutions by other factors are necessary. Let p be the dilution factor. Then equation (9) becomes

$$N_{urea} = 0.113p(M_w - M_s)_{(NaCl + urea)} - 1.16N_{NaCl} \qquad (10)$$

where N_{urea} and N_{NaCl} refer to the undiluted solution, and $(M_w - M_s)_{(NaCl + urea)}$ to the diluted solution.

Alternatively the normality of the urea in a solution of NaCl and urea can be specified in terms of the measured conductance, L, and the refractive index instrument reading $M_w - M_s$ by combining equations (10) and (3). Then

$$N_{urea} = 0.113p(M_w - M_s) - 3.00\,fL \qquad (11)$$

where p, and f are the dilution factors for the $(M_w - M_s)$ and L measurements, respectively. The extents of dilution, p, and f, should preferably be selected so that the readings are in the range of maximum accuracy. For the instruments used in the study it is desirable that conductivity readings be between 100 and 4000 μmhos, and refractometer instrument readings be between 1.00 and 4.00.

The validity of equations (3) and (11) was tested by making measurements on known solutions. The agreement between the analytical results and the normalities of the solutions verified that these equations gave results accurate to within about 5 percent. For example, determination of a known solution of 0.273 N_{urea} and 0.138 N_{NaCl} gave values of 0.281 N_{urea} and 0.134 N_{NaCl}. Even better agreement was obtained for a known mixture of 0.20 N_{NaCl} and 0.30 N_{urea}. Calculations based on conductivity and $(M_w - M_s)$ measurements gave values of 0.205 N_{NaCl} and 0.300 N_{urea}.

The measurements made with the differential refractometer are also applicable to urine. As stated previously the main salt ions present in urine, other than Na^+ and Cl^- are K^+ and SO_4^-. According to the literature (ref 9), the refractive indices at 20 C and 589 mμ for 0.1 N solutions of NaCl, K_2SO_4, and KCl are all 1.3341. Thus, the refractive index measurements will, just as with the conductivity measurements, respond in approximately the same way to all the main salt ions present in solution. Therefore, the analytical method described is applicable also to urine, where the normality of the total salt content is reported in terms of the normality of NaCl. Furthermore, measurements of urine solutions by these analytical techniques have given results in agreement with the urea and salt concentrations reported in the literature. For example, one urine sampling resulted in a calculated urea content of 0.31 N and a salt content of 0.23 N, in approximate agreement with 0.35 N urea and 0.21 N salt content found in typical urine (refs 5 and 6).

A further check to determine the validity of applying this method to urine and purified urine solutions was made by comparing the results obtained with the total solids content. For this comparison, the total solids was determined by evaporating a measured volume of urine to dryness by heating at 50 C. On a representative sample, the total solids of the sample was found to be 36.74 g/l. Using the conductivity and refractive index methods described herein, the sample was found to be 0.243 N with respect to NaCl and 0.370 N with respect to urea. By converting these concentrations to total solids content (using the molecular weights of 58.45 for NaCl and 60.06 for urea) a calculated total solids content of 36.43 g/l. was obtained. Thus, in this case, the results from the two methods agree to within 1 percent.

ANALYTICAL PROCEDURE:

Apparatus:

Conductivity Bridge, Industrial Instruments, Inc., Model RC-18, or equivalent

Conductivity cell, Platinized Electrodes, Cell Constant ≅ 1/cm

Constant temperature bath

Differential Refractometer: Brice-Phoenix Model BP 2000 V, or equivalent

Split cell, for refractive index measurements

Volumetric flasks, 10 ml, 50 ml, 100 ml, 500 ml

Pipettes, 1 ml, 5 ml, 10 ml, 20 ml

Determination of Cell Constant:

1. Dissolve 0.3728 g of reagent grade potassium chloride in conductivity-type water and dilute to 500 ml in a volumetric flask. (This will yield a 0.01000 N solution of potassium chloride.)

2. Rinse the conductivity cell at least three times with conductivity-type water.

3. Fill the conductivity cell with conductivity-type water and place in the constant temperature bath at 25.0 ± 0.1 C for 10-15 min.

4. Measure the conductivity of the water using the conductivity bridge.

5. Empty the cell, refill with conductivity-type water, bring to equilibrium in the constant temperature bath, and measure the conductivity.

6. If the conductivity of the water as measured in step 5 is not the same as that in step 4, repeat step 5 until two consecutive measurements are the same. (This water should be from the same source as that used in making the standard solution of potassium chloride.) This value is the measured conductivity of the water, L_w.

7. Rinse the conductivity cell three times with the standard solution of potassium chloride prepared in step 1.

8. Fill the conductivity cell with the standard solution of potassium chloride prepared in step 1 and place in the constant temperature bath at 25.0±0.1 C for 10-15 min.

9. Measure the conductivity of the standard solution of potassium chloride using the conductivity bridge.

10. Empty the conductivity cell, refill with the standard potassium chloride solution, bring to equilibrium in the constant temperature bath, and measure the conductivity.

11. If the conductivity determined in step 10 is not the same as that obtained in step 9, repeat step 10 until two consecutive measurements are the same. This is the measured conductivity of the solution L_n.

Calculation:

$$K = \frac{K}{L_n - L_w} = \frac{0.001411}{(L_n - L_w)} = \text{Cell Constant}$$

Notes:

1. In all conductivity measurements, the solution being measured must be protected from the atmosphere because the solutions will pick up carbon dioxide from the air which will increase the conductivity of the solution. Thus the container should be stoppered at all times or, if a siphon is in use, it should be protected from the air by a drying tube containing Ascarite.

2. Conductivity-type water should have a specific conductance no greater than 1 micromho. (A specific resistance of 1,000,000 ohms or greater.) Water of this quality can be obtained by several consecutive distillations through quartz apparatus, or by deionizing the water by passing it through a strong acid, strong base mixed resin ion exchanger.

3. The conductivity cell should be well filled with solution because, if the amount of liquid is just sufficient to cover the electrodes, the cell constant will be dependent upon the volume of liquid present in the cell. Some cells are designed to overcome this difficulty by having a glass envelope around the electrodes, whereas other cells must be filled well above the electrode area. It is for this reason that the cell constant is measured using known solutions rather than by calculation from the geometry of the cell.

Determination of Salt Concentration by Conductivity Measurement:

1. Dilute the unknown solution so that the measured conductivity will fall within the limits of about 100 micromhos to 4000 micromhos, by quantitatively transferring a known volume, using a pipette, to a volumetric flask, and diluting to volume with conductivity-type water. (For raw urine, pipette 1.0 ml of the sample into a 100-ml volumetric flask and dilute to volume with conductivity-type water. For the solution obtained after passage through the reverse osmosis cell, dilute 1 ml of solution to 10 ml or 10 ml of solution to 100 ml.)

2. Rinse the conductivity cell with the unknown solution, fill the cell with this solution and place in the constant temperature bath at 25.0 ± 0.1 C for 10-15 min.

3. Measure the conductivity of the solution with the conductivity bridge.

4. Empty the cell, refill with the unknown solution, bring to equilibrium in the constant temperature bath and measure the conductivity.

5. If the measured conductivity is not the same as that obtained in step 3, repeat step 4 until two consecutive measurements are the same.

Calculation:

$$N_{NaCl} = \frac{1000\ K\ V_f\ (L_m - L_w)\ 10^{-6}}{V_s\ \Lambda} = \frac{8.081\ K\ V_f\ (L_m - L_w)\ 10^{-6}}{V_s}$$

in which N_{NaCl} = normality of sodium chloride in the solution, K = cell constant, L_m = conductivity of unknown solution in micromhos, L_w = conductivity in micromhos of water used for dilution, V_f = volume in ml of diluted solution, V_s = volume in ml of unknown solution, and Λ = equivalent conductance of sodium chloride (123.74 at 25 C for a 0.001 N solution).

Notes:

1. If a temperature other than 25 C is selected, the equivalent conductance of the sodium chloride will change. Thus, in our case, 35 C was used at which temperature the equivalent conductance of sodium chloride is 145.6.

2. If desired, a graphical method can be used to determine the concentration. In the graphical method, a series of standard solutions of sodium chloride are made up in the concentration range of the unknown solutions to be measured. The conductivity L_m of each of these standard solutions is measured at constant temperature. The conductivity L_w of the water used to prepare the solutions is determined. A graph is prepared in which $(L_m - L_w)$ is plotted against the normality of sodium chloride. In using this method measurements are made of the conductivity L_m of the unknown solution and the conductivity L_w of the water used in the dilutions. The concentration of sodium chloride is than read off the graph. The result is multiplied by the dilution ratio V_f/V_s.

3. The conductivity of the water, L_w, is measured as described in steps 2-6 under determination of cell constant.

Determination of Urea Concentration:

Determination of standard curve of sodium chloride vs. refractive index change.

1. Dissolve 14.6100 g of reagent grade sodium chloride in distilled water and dilute the resulting solution to 500 ml in a volumetric flask. (This yields a 0.5000 N solution of sodium chloride.)

2. Pipette the aliquots shown in the following table into the indicated volumetric flask, and dilute to volume with distilled water.

Vol Std Soln (ml)	Vol Diluent (ml)	Normality of soln
undiluted	- - -	0.500
5.00	5.00	0.250
20.00	30.00	0.200
10.00	40.00	0.100
10.00	90.00	0.050

3. Fill both halves of the split cell with distilled water. Use the mercury light source of the differential refractometer with the filter to yield the 436 mμ line.

4. Read the differential refractometer. This gives the solvent zero reading, M_w.

5. Empty the refractometer cell, fill one-half with distilled water and the other half with the 0.050 N sodium chloride solution.

6. Read the differential refractometer. This is the solution reading, M_s.

7. The difference in the readings is $M_w - M_s$.

8. Plot $M_w - M_s$ vs. the normality of the solution.

9. Repeat steps 5-8 for each of the other four solutions, going from the most dilute to the most concentrated.

10. Determine the average slope of the resulting curve, k_1 (for our instrument $k_1 = 0.0977$). The normality of the sodium chloride can now be calculated from the equation:

$$N_{NaCl} = k_1(M_w - M_s)$$

Determination of Standard Curve of Urea vs. Refractive Index Change:

1. Dissolve 15.0150 g of reagent grade urea in distilled water and dilute the resulting solution to 500 ml in a volumetric flask. (This yields a 0.5000 N solution of urea.)

2. Pipette the aliquots shown in the following table into volumetric flasks, using distilled water as diluent.

Vol Std Soln (ml)	Vol Diluent (ml)	Normality of soln
undiluted	- - -	0.500
5.00	5.00	0.250
20.00	30.00	0.200
10.00	40.00	0.100
10.00	90.00	0.050

3. Fill both halves of the split cell with distilled water. Use the mercury light source and the filter to yield the 436 mμ line.

4. Read the differential refractometer. This gives the solvent zero reading, M_w.

5. Empty the refractometer cell, fill one-half with distilled water and the other half with the 0.050 N solution of urea.

6. Read the differential refractometer. This is the solution reading M_s.

7. The difference in readings is $M_w - M_s$.

8. Plot $M_w - M_s$ vs. the normality of the solution.

9. Repeat steps 5 - 8 for each of the other four urea solutions, going from the most dilute to the most concentrated.

10. Determine the average slope of the resulting curve, k_2 (for our instrument $k_2 = 0.1129$). The normality of the urea can now be calculated from the equation:

$$N_{urea} = k_2 (M_w - M_s)$$

ANALYSIS OF UNKNOWN MIXTURES FOR UREA AND SODIUM CHLORIDE

1. Determine the normality of the sodium chloride by the conductometric method as previously described.

2. Dilute the solution, so that the reading of the differential refractometer is on scale. For raw urine, pipette 10.00 ml of the urine into a 50 ml volumetric flask and dilute to volume with distilled water.* For solutions which have been passed through a reverse osmosis cell, the solution can usually be read undiluted.

3. Fill both halves of the split cell with distilled water and read on the differential refractometer using the mercury source and the filter to give the line at 436 mμ. This gives the solvent zero reading, M_w.

4. Fill half of the cell with the diluted unknown mixture and the other half of the cell with distilled water.

5. Read the differential refractometer to determine M_s.

6. Calculate the difference in readings, $M_w - M_s$.

Calculation:

N_{NaCl} = normality of the undiluted solution with respect to sodium chloride as determined from conductivity measurements and

$$N_{urea} = k_2 \left[\frac{N_{NaCl}}{k_1} - \frac{V_s}{V_m} (M_w - M_s) \right]$$

in which N_{urea} = normality of urea in the mixture, k_2 = calibration constant for urea as determined from standard solutions, N_{NaCl} = normality of the sodium chloride in the undiluted mixture, k_1 = calibration constant for sodium chloride as determined from standard solutions, M_w = reading on the differential refractometer with water on both sides of the split cell, M_s = reading on the differential refractometer with the diluted solution of the mixture on one side of the cell (toward the microscope)

*If the same solutions are to be used for conductivity and refractive index measurements, use conductivity-type water rather than distilled water. In our laboratories we use conductivity-type water for all dilutions and solutions, even though it is not required for the refractive index measurements.

and water on the other side of the split cell (toward the light source), V_s = volume in ml of the solution after dilution, and V_m = volume of ml of the unknown solution used in the dilution. $\frac{V_s}{V_m}$ = dilution factor.

Notes:

1. In the normal use of the differential refractometer, readings are made with the cell in two positions, 180 degrees out of phase. This is done to correct for the inaccuracies in cell construction. However, with our instrument, a slightly greater range was realized by making all measurements in the same cell position, i.e., with the solvent and solution in the same position relative to the light source and eyepiece. Therefore, in our laboratories, all measurements were made with the water toward the light source and the unknown solution toward the eyepiece. As a result, the constants obtained will hold only for our particular instrument in the configuration in which it was calibrated.

REFERENCES

1. Ambard, L., Trautman, S., Ultrafiltration, C.C. Thomas Publishing Co., Springfield, Illinois, 1960.

2. McBain, J.W., Kistler, S.S., "The Hydration of Sucrose in Aqueous Solution," J. Physical Chem., 33:1806-12, 1929.

3. Ferry, J.D., "Ultrafiltration Membranes and Ultrafiltration," Chem. Revs., 18:373-456, 1935.

4. Loeb, S., Sourirajan, S., Sea Water Demineralization by Means of a Semipermeable Membrane, Univ. Calif., Dept. of Eng. Reports, No. 60-60, 1960.

5. Altman, P.L., Dittmer, Dorothy S. (Ed.), Biology Data Book, AMRL-TR-64-100, Aerospace Medical Research Laboratories, Wright-Patterson Air Force Base, Chio, p 186, October 1964, AD 454 590.

6. Meier, E.A., Everett, Jr., R., Feasibility of Using Membranes for Urine Purification, AMRL-TDR-63-113, Aerospace Medical Research Laboratories, Wright-Patterson Air Force Base, Ohio, November 1963, AD 427 413.

7. Prutton, C.F., Maron, S.H., Fundamental Principles of Physical Chemistry, Revised Edition, MacMillan Co., New York, p 449, 1951.

8. International Critical Tables, Vol VI, McGraw-Hill Book Co., New York, p 261, 1929.

9. International Critical Tables, Vol. VII, McGraw Hill Book Co., New York, p 65, 1930.

Security Classification

DOCUMENT CONTROL DATA - R & D

(Security classification of title, body of abstract and indexing annotation must be entered when the overall report is classified)

1. ORIGINATING ACTIVITY (Corporate author) Melpar, Inc., an American-Standard Company 7700 Arlington Boulevard Falls Church, Virginia 22046	2a. REPORT SECURITY CLASSIFICATION UNCLASSIFIED 2b. GROUP N/A

3. REPORT TITLE

WATER RECLAMATION BY REVERSE OSMOSIS

4. DESCRIPTIVE NOTES (Type of report and inclusive dates)

Final Report, April 1967-August 1968

5. AUTHOR(S) (First name, middle initial, last name)

John H. Fossum, PhD

6. REPORT DATE May 1969	7a. TOTAL NO. OF PAGES 47	7b. NO. OF REFS 9
8a. CONTRACT OR GRANT NO. F33615-67-C-1534 b. PROJECT NO. 6373 c. Task No. 637304 d. Work Unit No. 637304003	9a. ORIGINATOR'S REPORT NUMBER(S) 7256 9b. OTHER REPORT NO(S) (Any other numbers that may be assigned this report) AMRL-TR-68-190	

10. DISTRIBUTION STATEMENT

This document has been approved for public release and sale; its distribution is unlimited.

11. SUPPLEMENTARY NOTES	12. SPONSORING MILITARY ACTIVITY Aerospace Medical Research Laboratory, Aerospace Medical Div., Air Force Systems Command, Wright-Patterson AFB, OH 45433

13. ABSTRACT

A laboratory reverse osmosis system capable of purifying 4 liters of a mixture of 2.4 liters of urine and 1.6 liters of either wash or dehumidification water in a 24-hour period was fabricated by Melpar, Inc. The quantitative rejection of urea by the membranes was found to be the major problem. Urea rejection by complexing urea with various chemicals was investigated but no significant increase was realized. The effect of storage conditions on membrane performance was investigated. A study was made of the annealing of cellulose acetate membranes and attempts were made to develop satisfactory benzyl derivatives of cellulose acetate. A method was developed which permitted a rapid evaluation of membrane performance. A satisfactory membrane was found to result from the precise control of the annealing process.

DD FORM 1 NOV 65 1473

Security Classification

Security Classification

14. KEY WORDS	LINK A ROLE	LINK A WT	LINK B ROLE	LINK B WT	LINK C ROLE	LINK C WT
Reverse osmosis						
Cellulose acetate membranes						
Potable water from urine						
Perchlorate method						
Formamide method						

Security Classification