AD 691 751

1384

1780

FINAL TECHNICAL REPORT

FEASIBILITY STUDY OF 48-VOLT CRANKING SYSTEM

Written by:

J. P. Gale

DELCO-REMY DIVISION

GENERAL MOTORS CORPORATION

CONTRACT NO. DA-20-113-AMC-06862 (T)

PERFORMED UNDER THE TECHNICAL SUPERVISION OF RESEARCH

AND ENGINEERING DIRECTORATE ARMY TANK AND AUTOMOTIVE CENTER

May 1969

TECHNICAL LIBRARY
REFERENCE COPY

Distribution of this document is unlimited.

20031219030

AN-12234

Disclaimer Notice

When government drawings, specifications, or other data are used for any purpose other than in connection with a definitely related government procurement operation, the United States Government thereby incurs no responsibility nor any obligation whatsoever and the fact that the Government may have formulated, furnished, or in any way supplied the said drawings, specifications, or other data is not to be regarded by implication or otherwise as conveying any rights or permission, to manufacture, use, or sell any patented invention that may in any way be related thereto.

The findings in this report are not to be construed as an official Department of the Army position.

The citation of commercial products in this report does not constitute an official indorsement or approval of such products.

Distribution of this document is unlimited.

CITATION OF EQUIPMENT IN THIS REPORT DOES NOT CONSTITUTE AN OFFICIAL INDORSEMENT OR APPROVAL OF THE USE OF SUCH COMMERCIAL HARDWARE.

FINAL TECHNICAL REPORT

FEASIBILITY STUDY OF 48-VOLT CRANKING SYSTEM

Written by:

J. P. Gale

DELCO-REMY DIVISION

GENERAL MOTORS CORPORATION

CONTRACT NO. DA-20-113-AMC-06862 (T)

PERFORMED UNDER THE TECHNICAL SUPERVISION OF RESEARCH

AND ENGINEERING DIRECTORATE ARMY TANK AND AUTOMOTIVE CENTER

May 1969

Distribution of this document is unlimited.

ABSTRACT

The purpose of this work was to investigate the feasibility of a 48-volt cranking system for military diesel engines. Test work was exploratory.

The cranking requirements were established for three military diesel engines: the Continental AVDS-1790-2, the Detroit Diesel 12V71T, and the Mack ENDT 673. An experimental 48-volt cranking system was tested and compared to the present 24-volt system. The 48-volt system did crank faster and it did produce a quicker start on the Mack ENDT-673 engine. Problems associated with the 48-volt system would be motor and contactor development and design of a dual-voltage circuit to integrate the cranking system with other electrical components.

Further study is recommended. Experimental 48-volt cranking systems and improved 24-volt cranking systems should be field tested on various vehicles.

Signed:

James P. Gale

TABLE OF CONTENTS

	Page
ABSTRACT	
TABLE OF CONTENTS	v
LIST OF ILLUSTRATIONS	vi
INTRODUCTION	1
MATERIALS USED	2
TEST PROCEDURE	3
RESULTS AND DISCUSSION	4
CONCLUSIONS AND RECOMMENDATIONS	13
APPENDIX A	19
ENGINE TORQUE - SPEED TEST	
APPENDIX B	25
ENGINE STARTING TEST	

LIST OF ILLUSTRATIONS

Figure	Title	Page
Fig. 1	Continental AVDS 1790 - 2 Engine Requirements at -10°F and -25°F	5
Fig. 2	Detroit Diesel 12V - 71 T Engine Requirements at -10°F and -25°F	6
Fig. 3	Mack ENDT 673 Engine Requirements at -10°F and -25°F	7
Fig. 4	Cranking Motor Performance 24V MS-53011 (Delco-Remy C-2432)	9
Fig. 5	Cranking Motor Performance 48V Delco-Remy Design #394.105	10
Fig. 6	Cranking Motor Performance 48V Delco-Remy Design #394.002	11
Fig. 7	Motor Design Data	12
Fig. 8	24/48 Dual Voltage System with Series-Parallel Switch	15
Fig. 9	24/48 Dual Voltage System with Battery Charger	16
Fig. 10	24 Volt System Modified	17
Fig. 11	Continental AVDS 1790 - 2	31
Fig. 12	Detroit Diesel 12V - 71 T	33
Fig. 13	Mack ENDT 673	35

INTRODUCTION

On 22 June 1965, contract DA-20-113-06862 (T) was awarded to Delco-Remy, Division of General Motors Corporation, by the U. S. Army Tank Automotive Center. The purpose of the contract was to investigate the feasibility of 48-volt cranking systems for military engines. Sufficient information should be accumulated during the test to suggest the course of action to take in regard to 48-volt cranking motor design and circuit requirements. Preliminary concept drawings of a 48-volt motor and specifications for the associated circuit were to be the final result of this work.

The object of the test program was to obtain better cranking and starting with smaller battery through the use of higher voltages. It is desirable to keep battery size and weight at a minimum in order to improve air transport capabilities and supply logistics. Reduced requirements for battery space, size and weight would also be an aid in vehicle design.

The project was divided into three phases:

Phase I: Determine the cranking torque requirements at -10°F and -25°F of selected military diesel engines. At these cold temperatures, establish the minimum cranking speed needed to assure a reliable start.

Phase II: Investigate motor designs and modify two existing designs for use on 48 volts. Select the better performing cranking motor for trial operation at -25°F.

Phase III: Based upon the information obtained in the previous phases, make recommendations for a 48-volt system to be applied to various military diesels.

MATERIALS USED

For the work of this test three military diesel engines were supplied. They were:

1) Continental AVDS-1790-2
   Air cooled, 4 cycle
   12 cylinder, 1790 cu. in., 5.75 x 5.75 (B x S)

2) Detroit Diesel 12V-71T
   Liquid cooled, 2 cycle
   12 cylinder, 852 cu. in., 4.25 x 5

3) Mack ENDT - 673
   Liquid cooled, 4 cycle
   6 cylinder, 673 cu. in., 4.875 x 6

Lubricating oil used in the test work was determined by the temperature:

-10°F	SAE 10W to the high limit of the viscosity range (3854 cp at -10°F)
-25°F	MIL - L - 10295 oil of average viscosity (1653 cp at -10°F)

The power supply consisted of 6TN batteries (12V-100AH) connected in various arrays.

Cranking motors were of the military standard type. For work on the Continental and Detroit Diesel engines an MS-53008 type motor was used (Ref. Delco-Remy 1109972). For work on the Mack engine an MS-53011 type motor was used (Ref. Delco-Remy 1113930).

TEST PROCEDURE

The test work consisted primarily of determining motoring torque at various speeds on the three engines supplied for this contract. The minimum cranking speed necessary for reliable engine starting was also determined.

The motoring torque-speed data was obtained in a cold chamber large enough to maintain temperatures during the tests. The procedure used is outlined in Appendix A.

The oil used in the engines was purchased in a large quantity to assure a constant viscosity characteristic throughout the test. The SAE 10W oil used was blended to have the high-limit viscosity. The high-limit viscosity presents the most difficult cranking condition to be expected when using this weight of oil. The MIL-L-10295 (sub-zero) was not blended to the high viscosity, rather the oil was considered to be average viscosity. The viscosity was measured by means of a GM Forced Ball Viscometer in order to have a record of the viscosity.

The starting tests were performed according to the procedure outlined in Appendix B. The power source for this testing was the batteries specified and at the temperature specified.

RESULTS AND DISCUSSION

The cranking and starting requirements of the three selected engines were determined by means of the cranking and starting tests at cold temperatures. The results of these tests are given in Figure 1, Figure 2 and Figure 3. The "A" graph in each figure sets forth the torque-speed relationship for each engine when SAE 10W oil and MIL-L10295 (sub-zero) oil is used. The "B" graph in each figure presents the data in a horsepower-speed relationship and shows the minimum speed for reliable starting pinpointed as the minimum starting condition.

The minimum condition for reliable starting is summarized in the following table.

	Minimum Condition (RPM @ HP)	
Engine	-10°F	-25°F
Continental AVDS-1790-2	80 @ 12.8	85 @ 9.5
Detroit Diesel 12V-71T	95 @ 13	-
Mack ENDT - 673	97 @ 8.7	120 @ 7.5

There is no minimum condition given for the Detroit Diesel 12V-71T engine at -25°F as it was not reliably or readily started at this temperature during the test work.

Testing an actual 48-volt system was the next step in the program. For this work, the Mack ENDT-673 engine was selected due to its reliable starting characteristics.

Two cranking motors were selected for modification to operate on 48 volts. Both motors were of the same physical size as an MS-53011 motor: however they were of different electrical performance, Delco-Remy Designs #394.105 and #394.002. Construction details are given in Fig. 7. In conjunction with the two modified motors, one MS-53011 motor was tested on 24 volts for comparison. The final performance curves of the three motors used in the 48-volt test are shown as Fig. 4, Fig. 5, Fig. 6.

Using the above performance curves, an analysis was made of the best cranking ratio to use for the 48-volt test work. The best ratio depends upon the test temperature, oil used in the engine, the engine, the battery supply, and the motor performance. The best cranking ratio ranged from 10/1 to 13.5/1. It was decided to use the 11.5/1 cranking ratio that was built into the Mack ENDT-673 engine. Accordingly, the 48-volt system was tested at -25°F with MIL-L-10295 oil in the engine using the 11.5/1 cranking ratio available.

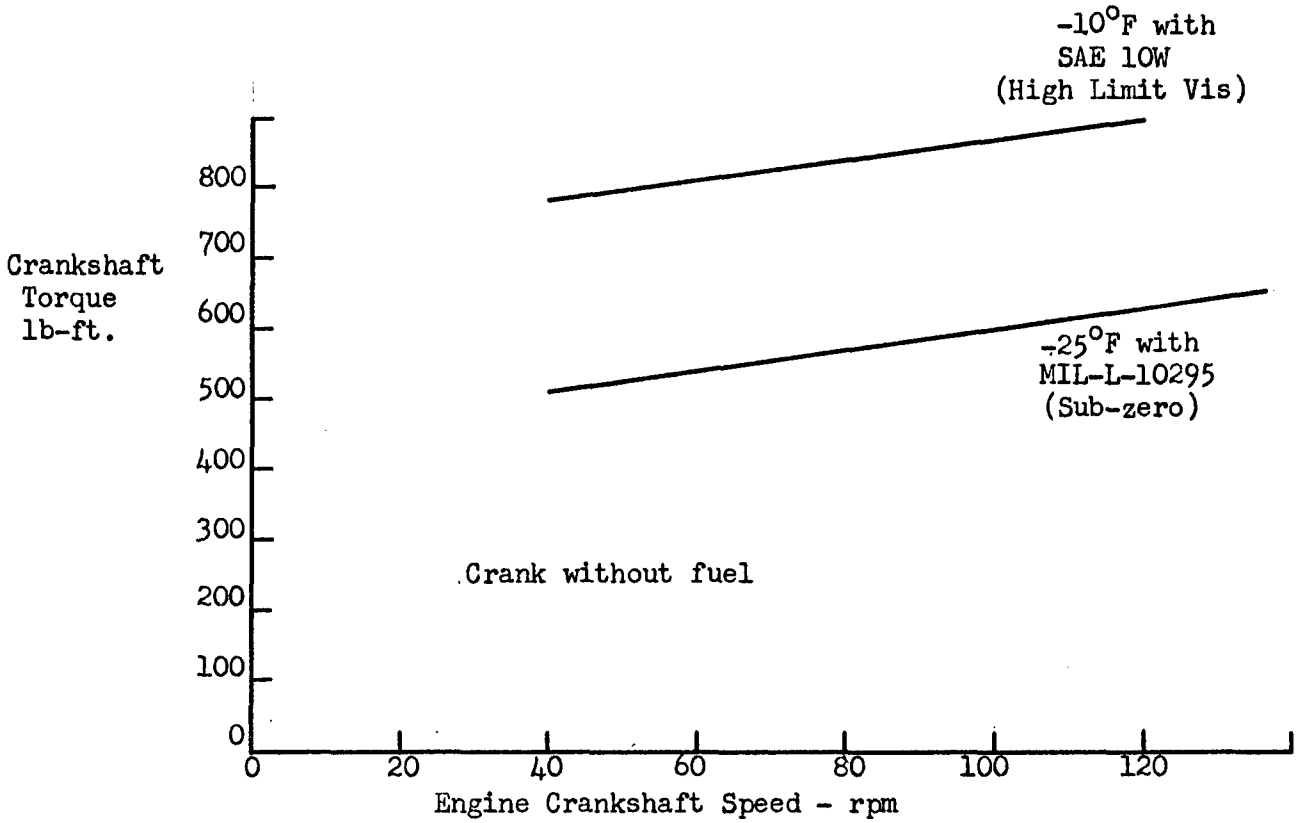

A. - Torque-Speed Requirements

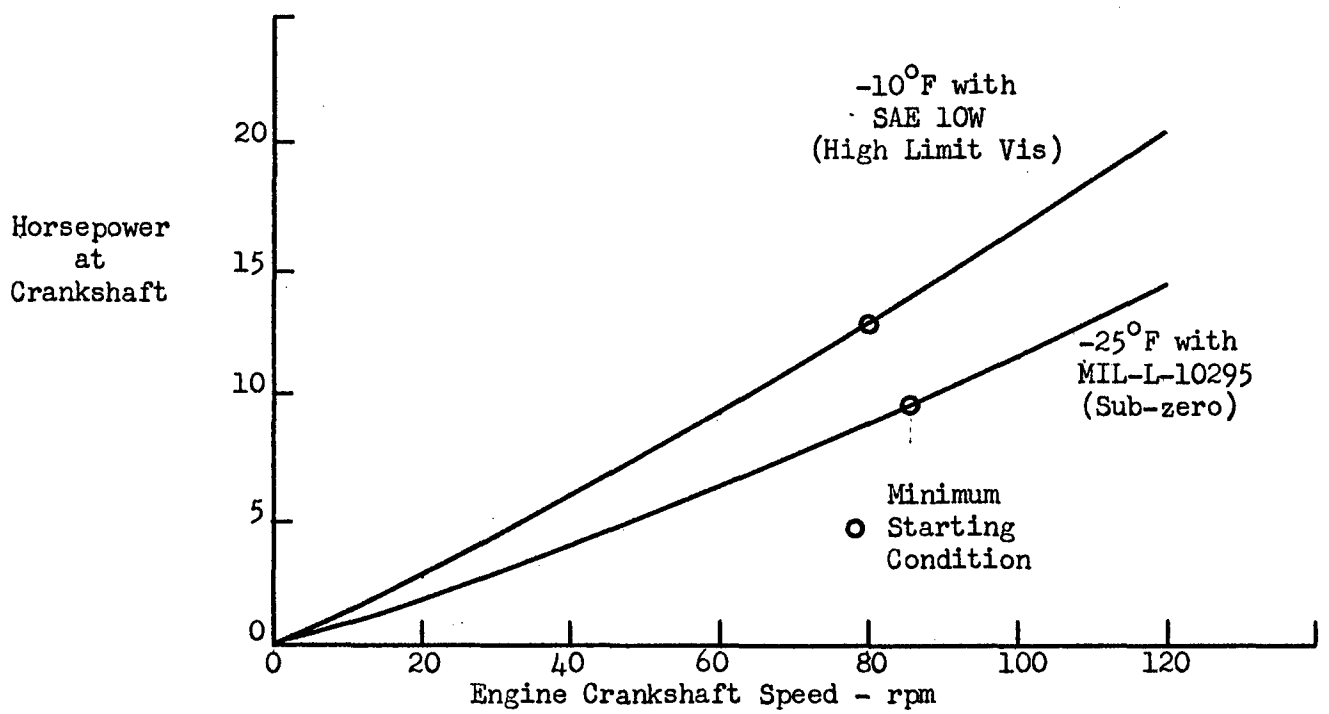

B. - Friction Horsepower Requirements

Fig. 1: Continental AVDS - 1790 - 2
Engine Requirements at -10°F and -25°F

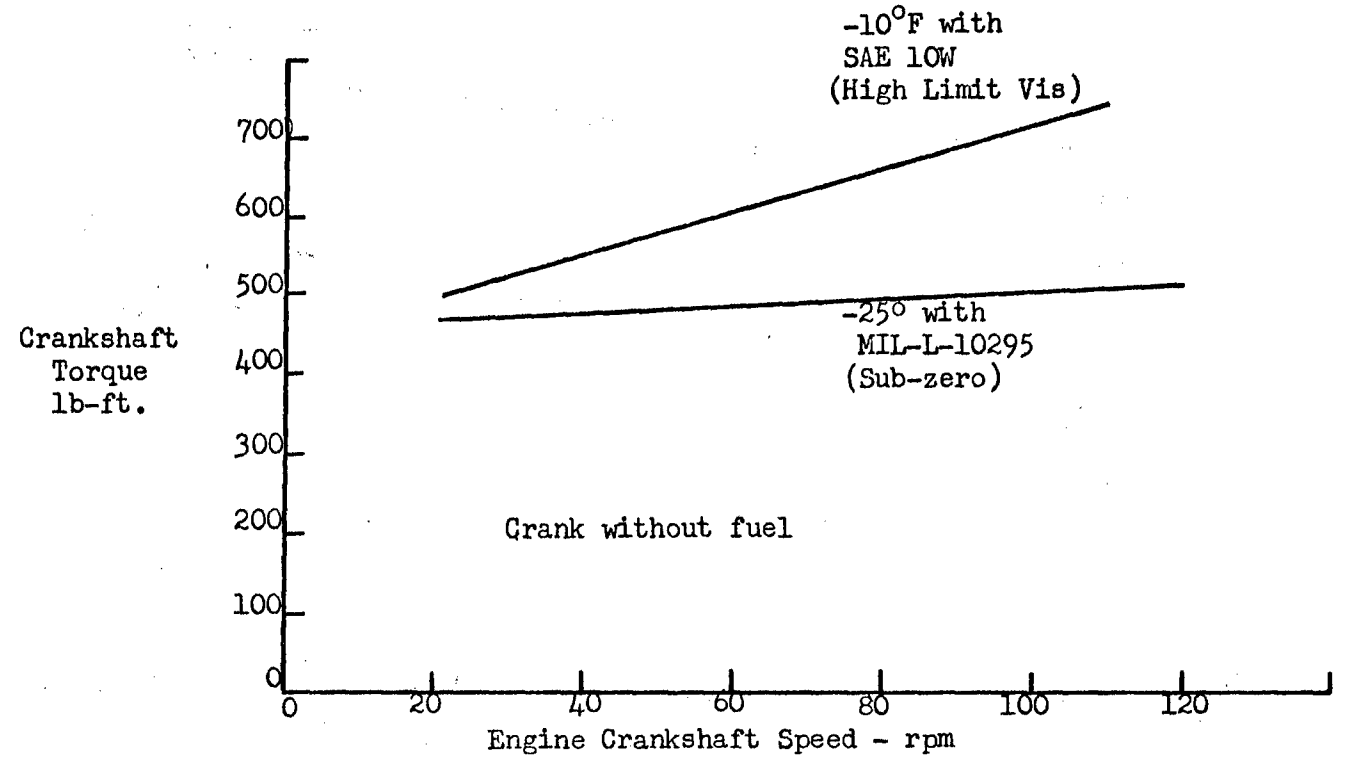

A.. - Torque-Speed Requirements

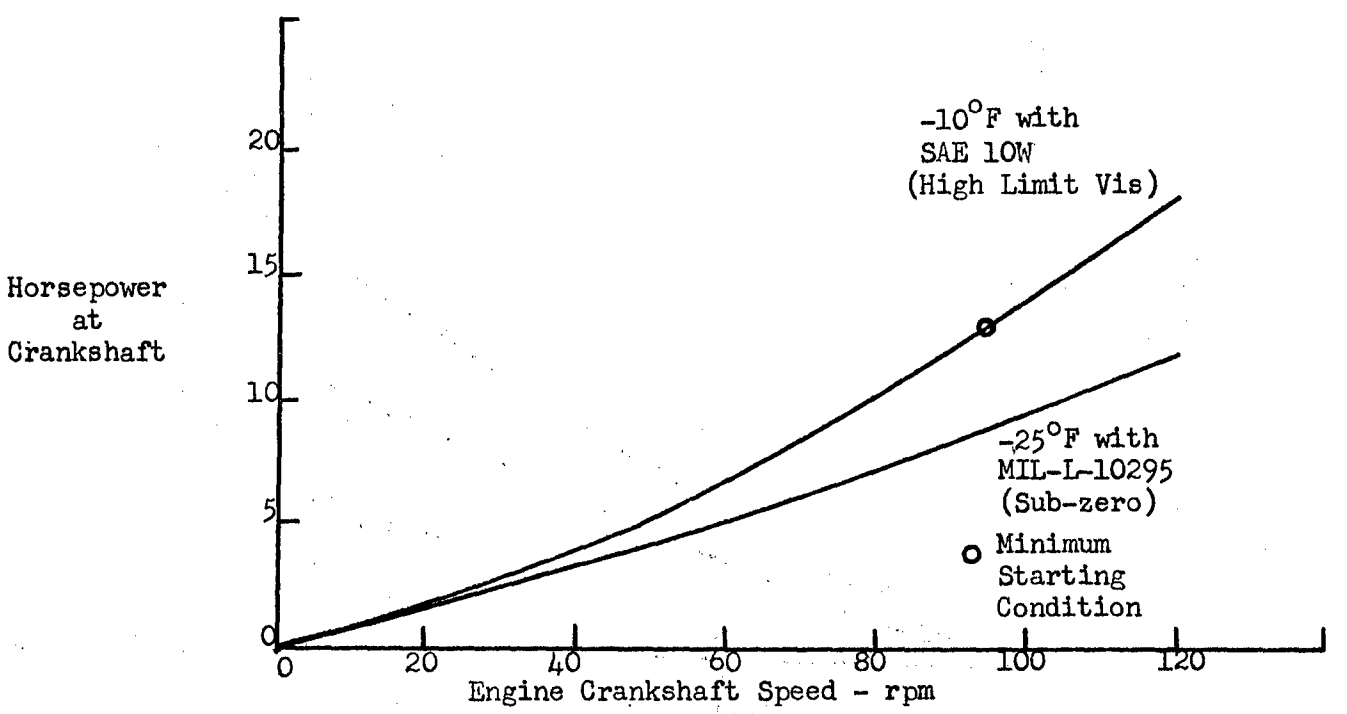

B. - Friction Horsepower Requirements

Fig. 2: Detroit Diesel 12V - 71T
Engine Requirements at -10° and -25°F

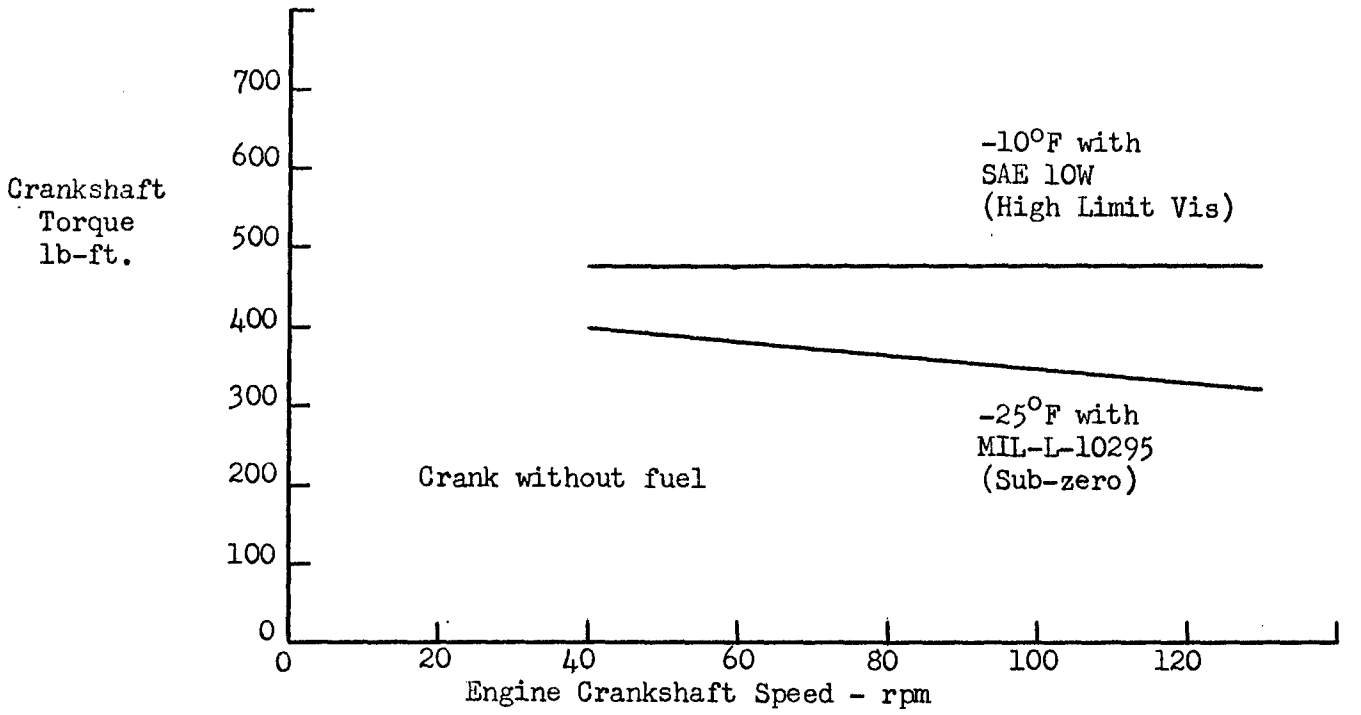

A. - Torque-Speed Requirements

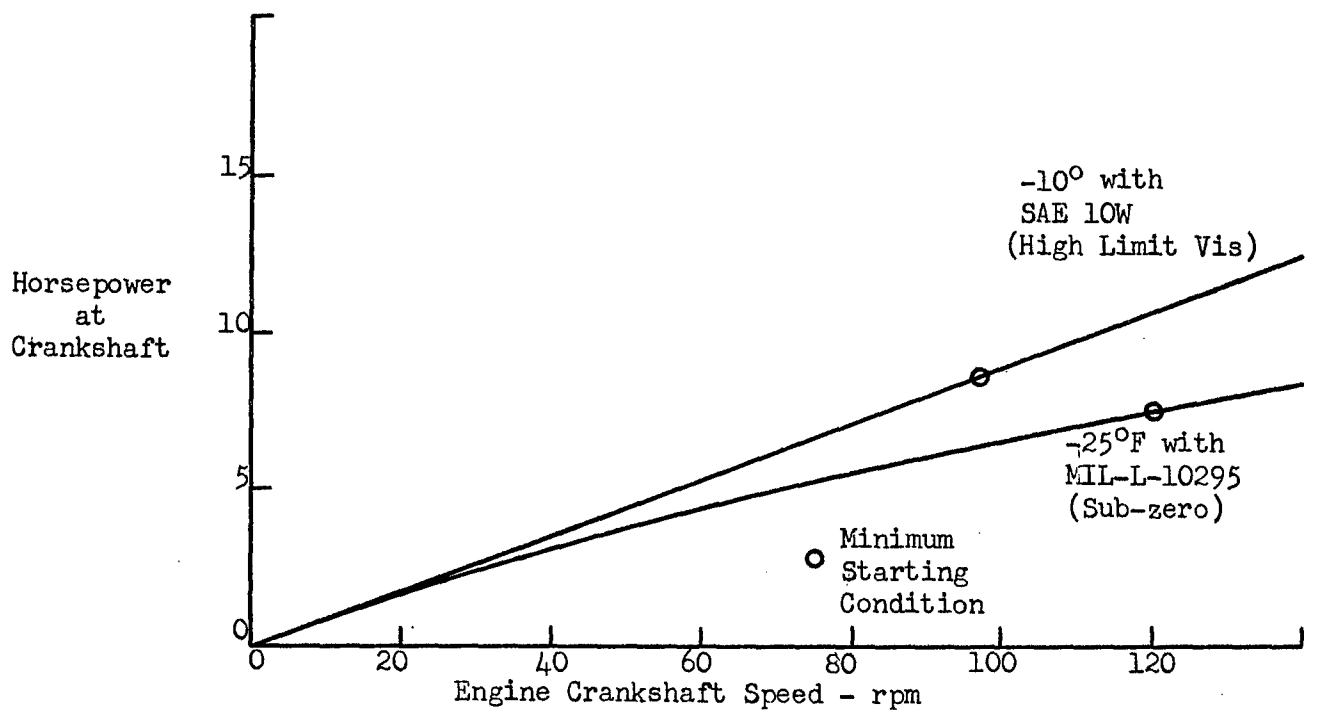

B. - Friction Horsepower Requirements

Fig. 3: Mack ENDT 673
Engine Requirements at -10°F and -25°F

A comparison test was made using the standard MS-53011 motor in a 24-volt system. The power supply was four 6TN batteries in both systems, the difference was in the arrangement of the batteries for either 24-volt or 48-volt system use.

Results of the 48-volt starting test a -25°F are summarized here:

System Voltage	Motor Design	Cranking Rpm	Cranking Amp	Start
24	Standard MS-53011 1T Armature & Series Fields	135	545	62 sec.
48	DR #394.105 1T Armature & Compound Fields	217	512	8 sec.
48	DR #394.002 2T Armature & Series Fields	148	280	38 sec.

During the starting tests, a malfunction occured while the engine was unattended in the cold room at night. The malfunction was a case of welded contacts and resulted in a destroyed motor and in discharged and frozen batteries. This occurred during preparations for the first test with the 48-volt system.

In addition to the starting test, a test was made in which the battery power supply was run down with continuous cranking at 0°F. The load for the battery run down test was the Mack ENDT-673 engine with SAE 10W oil in the crankcase. Experience indicates that if the cranking motor can withstand a 0°F battery run down test without failure, the motor should be relatively trouble free on the application. Results of the battery run down test are summarized in the following table.

System Voltage	Motor Design	Time to Run Down	Motor Failure
24	Standard MS-53011 1T Armature & Series Fields	383 sec.	No
48	DR Design #394.105 1T Armature & Compound Fields	138 sec.	No
48	DR Design #394.002 2T Armature & Series Fields	111 sec.	Yes

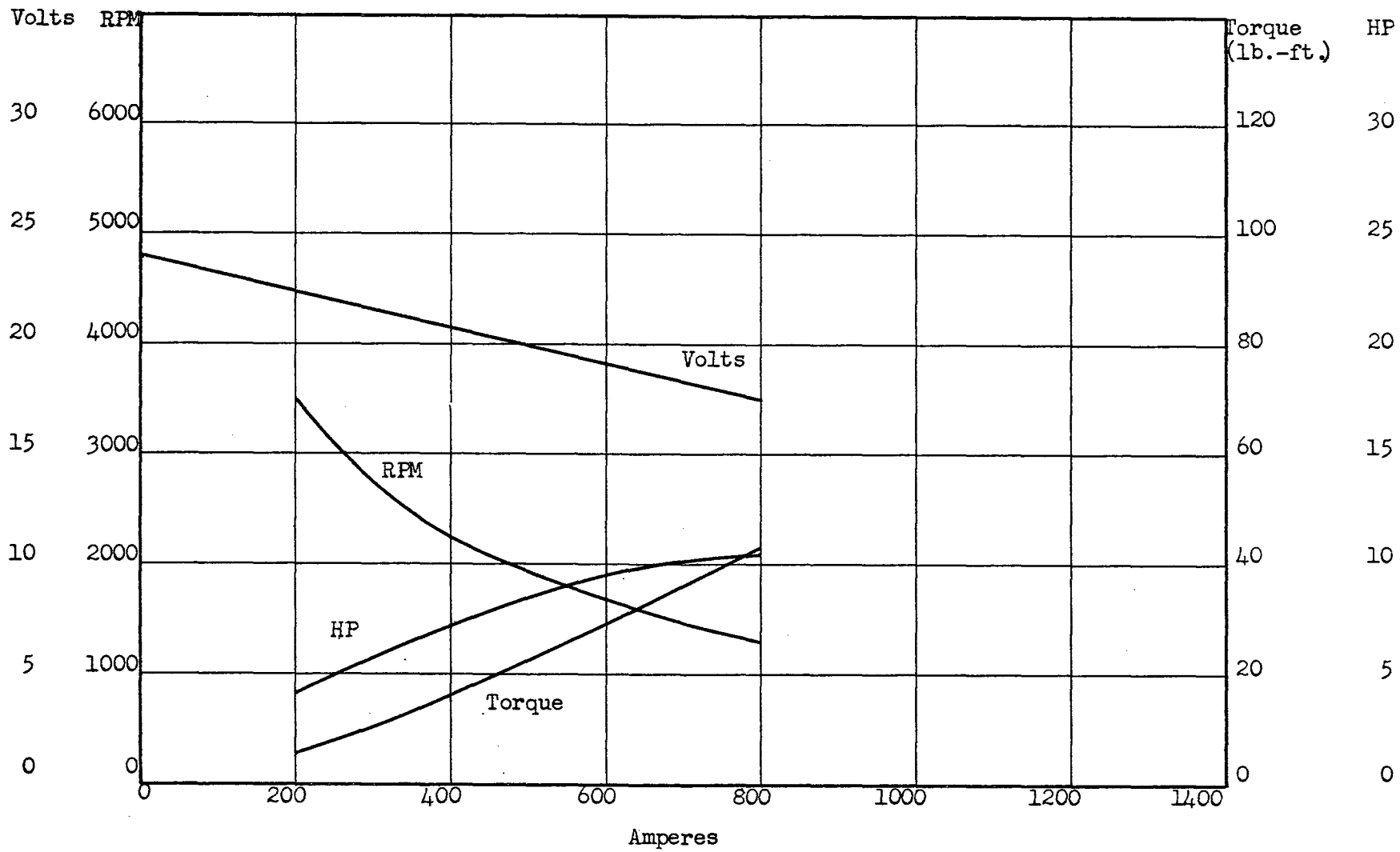

Fig. 4: Cranking Motor Performance - 24 V
MS-53011 (Delco-Remy Performance C-2432)

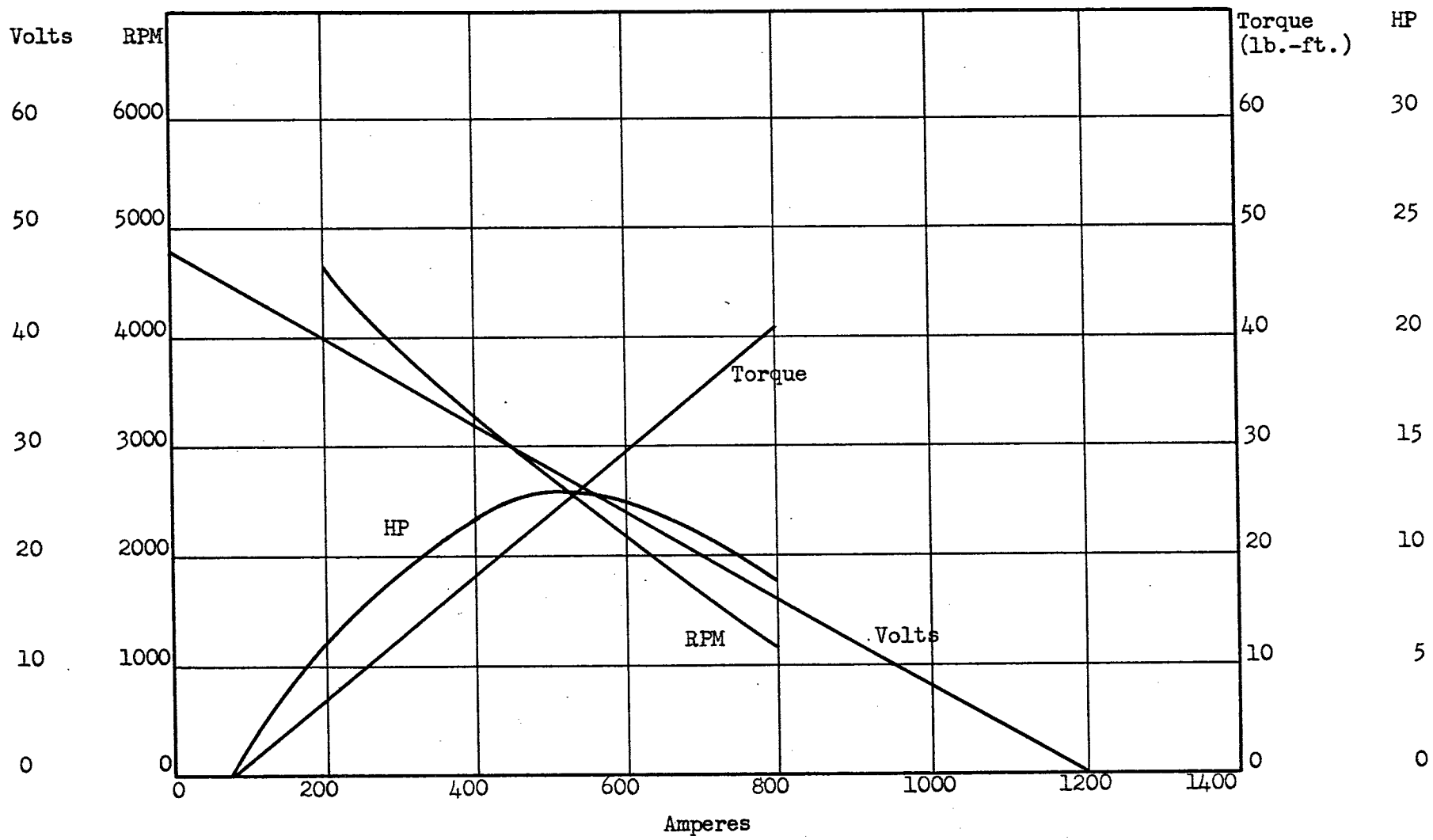

Fig. 5: Cranking Motor Performance - 48 V
Delco-Remy Design #394.105

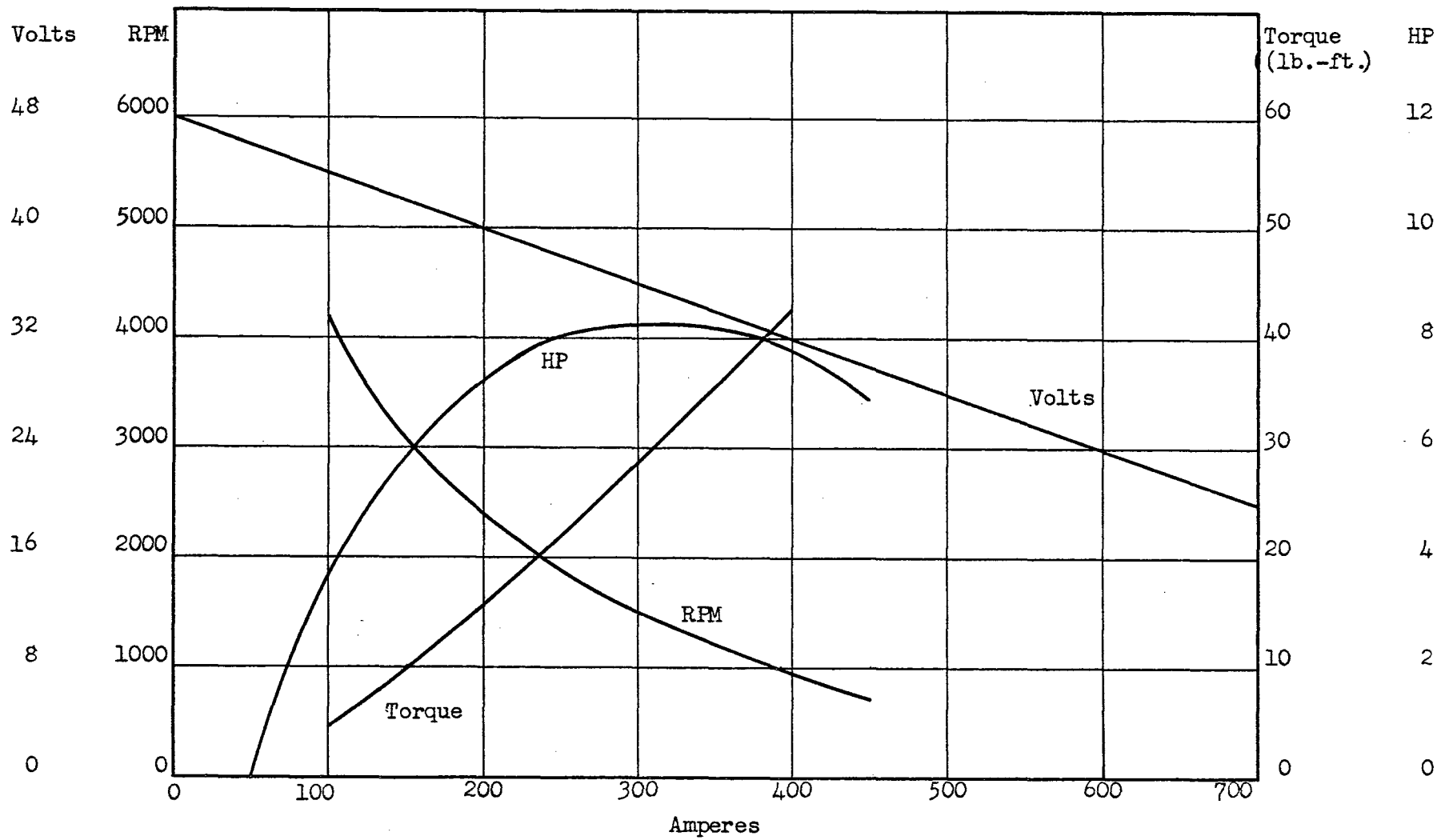

Fig. 6: Cranking Motor Performance - 48 V
Delco-Remy Design #394.002

The power supply for the run down test was four 6TN batteries arranged either in series-parallel for 24 volts or in series for 48 volts. The test was stopped when either the engine cranking speed reached 20 rpm or the cranking motor failed.

As noted above, the motor with the 2 turn armature failed during the run down test. This was expected as the cranking current was in excess of the current rating of the armature. Further, a failure was not expected in the other two motors as the cranking current was less than the current rating of the motor.

MOTOR DESIGN DATA

Voltage	24V	48V	48V
Design	MS-53011	DR #394.105	DR #394.002
Frame Size	5.12 x 10.12	same	same
Poles	4	same	same
Fields	4	same	same
Connected	Series-Parallel	Compound	Series
Field Conductor (Turns & Size)			
Series: Turns	$5\frac{1}{2}$ T	$8\frac{1}{2}$ T (2 coils)	$5\frac{1}{2}$ T
Size	.090 x .310	.065 x .310	.090 x .310
Shunt: Turns	-	120 T (2 coils)	-
Size	-	#19	-
Armature: Bars	25	same	same
Slots	25	same	same
Turns	1	1	2
Connected	Wave	Wave	Wave
Conductor	.090 x .240	.090 x .240	#12

Fig. 7: Motor Design Data

CONCLUSIONS AND RECOMMENDATIONS

The conclusions to be made from the test work are:

1) A 48-volt system is possible.

2) A 48-volt system did produce desirable results.

   a) The 48-volt cranking system resulted in a very rapid start on the Mack ENDT-673 engine.

   b) The 48-volt cranking system did produce an increase in cranking speed on the Mack ENDT-673 engine.

3) A dual-voltage system will be required to use a 48-volt cranking system if 24-volts is retained for the remainder of the vehicle electrical system.

4) With the 48-volt cranking system, a new approach is required to switch the 48-volt power.

It is recommended that the investigation continue into the development of a 48-volt cranking system. The 48-volt cranking system should be field tested on appropriate vehicles for a period of time. The cranking motors used in this test were experimental one-of-a-kind models and would not be suitable for field use. Development work is necessary to establish the reliable performance and durability characteristics that are required for military vehicles.

The use of a 48 volt cranking circuit will require a means of integrating the cranking system into the vehicle electrical system. Also the present magnetic switches and solenoid switches found on cranking motors are not adequate for switching the 48-volt power. The case of welded contacts encountered in the cold room test is a warning of trouble to be expected. We therefore recommend that contactors be used that are adequate for switching the 48-volt power. Two circuits are suggested for consideration in the dual voltage application:

1) Fig. 8 that uses a contactor with interlocks to perform the function of a series-parallel switch. It connects the vehicle batteries in parallel for charging and connects the batteries in series for cranking.

2) Fig. 9 that uses a contactor for controlling the 48-volt power. The vehicle 24-volt system is supplemented by additional 24-volt batteries to obtain the necessary 48-volt cranking voltage. The supplemental cranking batteries are charged by a solid state battery charger that operates off the vehicle generator.

In addition to recommending further study of the 48-volt cranking system, we also recommend investigation into improvements that may be made to the 24-volt cranking system. Investigation should be made into motor modifications for increased cranking speed and possible modification to the cranking circuit for more reliable operation. In Fig. 10, we suggest a circuit that uses the motor solenoid switch as a signal that the drive is in mesh so that cranking can take place. The signal operates the magnetic switch that completes the cranking circuit.

There are several reasons for recommending investigation into improvements of the 24-volt system.

1) This is a very simple and direct system, not complicated by dual voltage as the 48-volt cranking system would require.

2) The 24-volt motor has an established endurance record. With the 48-volt motor problems of tracking as a result of normal brush dust could be expected.

3) The solenoid switch used to control the 24-volt power is simpler and less expensive than the contactor required to control the 48-volt power.

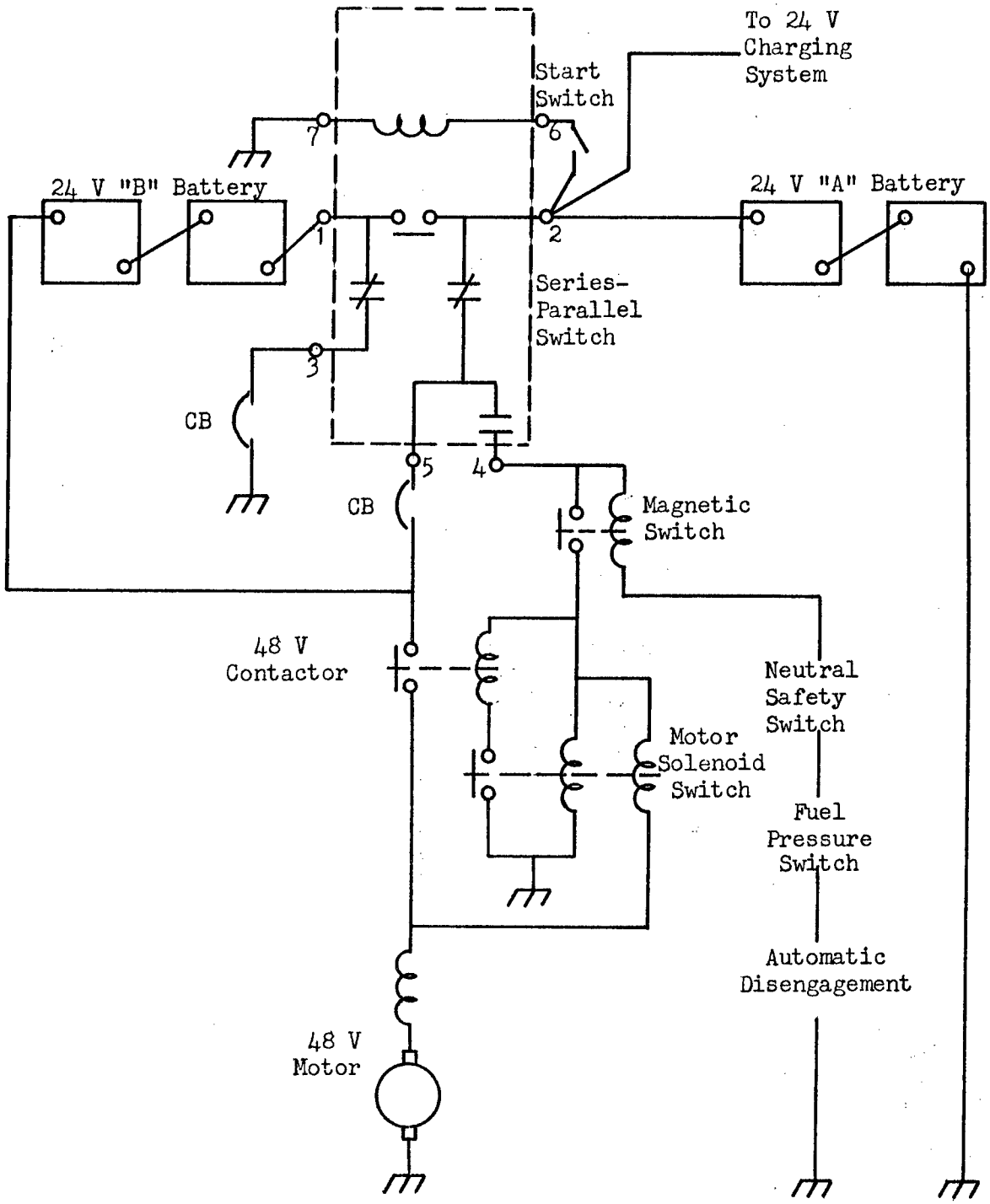

Fig. 8: 24/48 Dual Voltage System
with Series-Parallel Switch

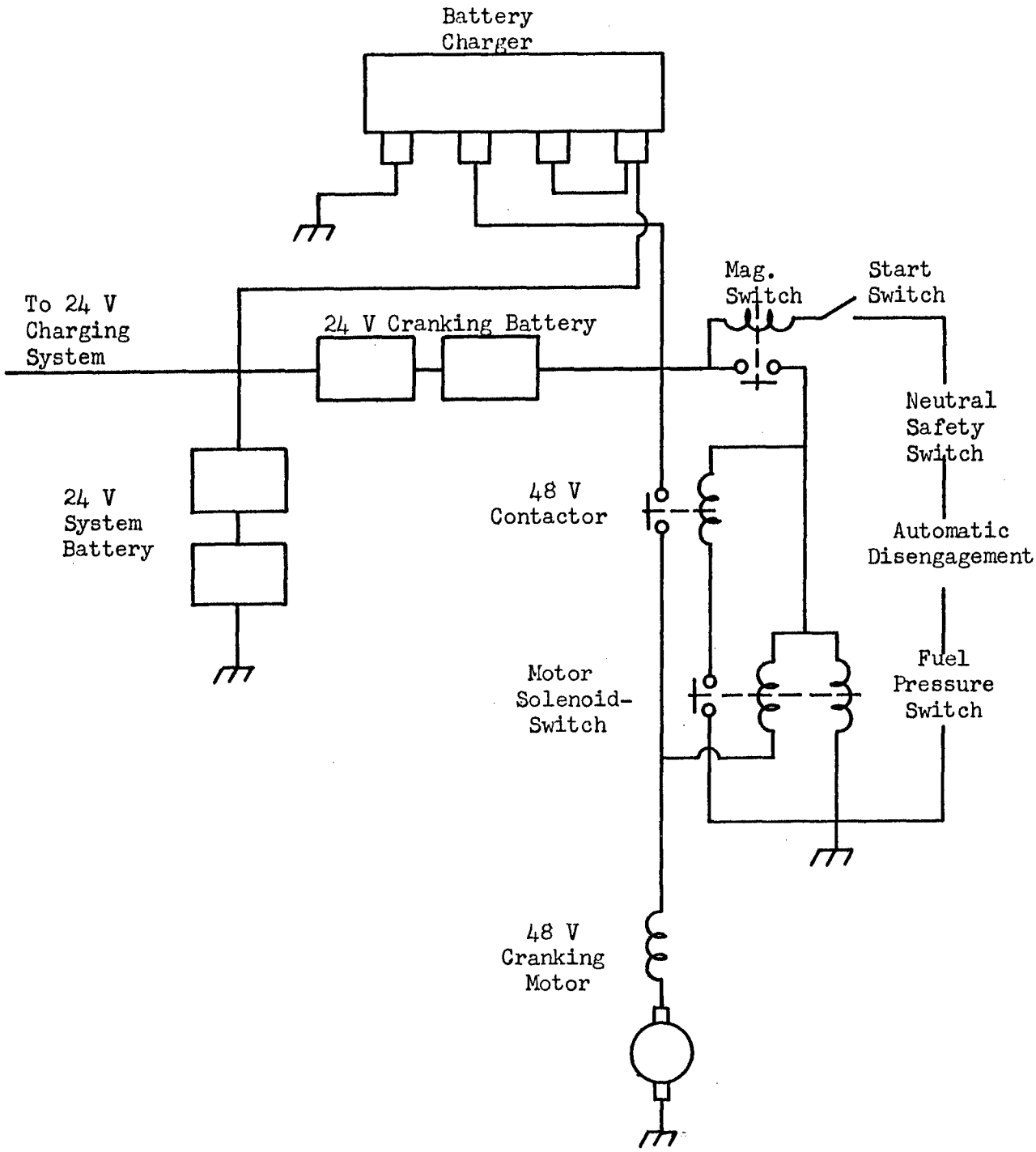

Fig. 9: 24/48 Dual Voltage System
with Battery Charger

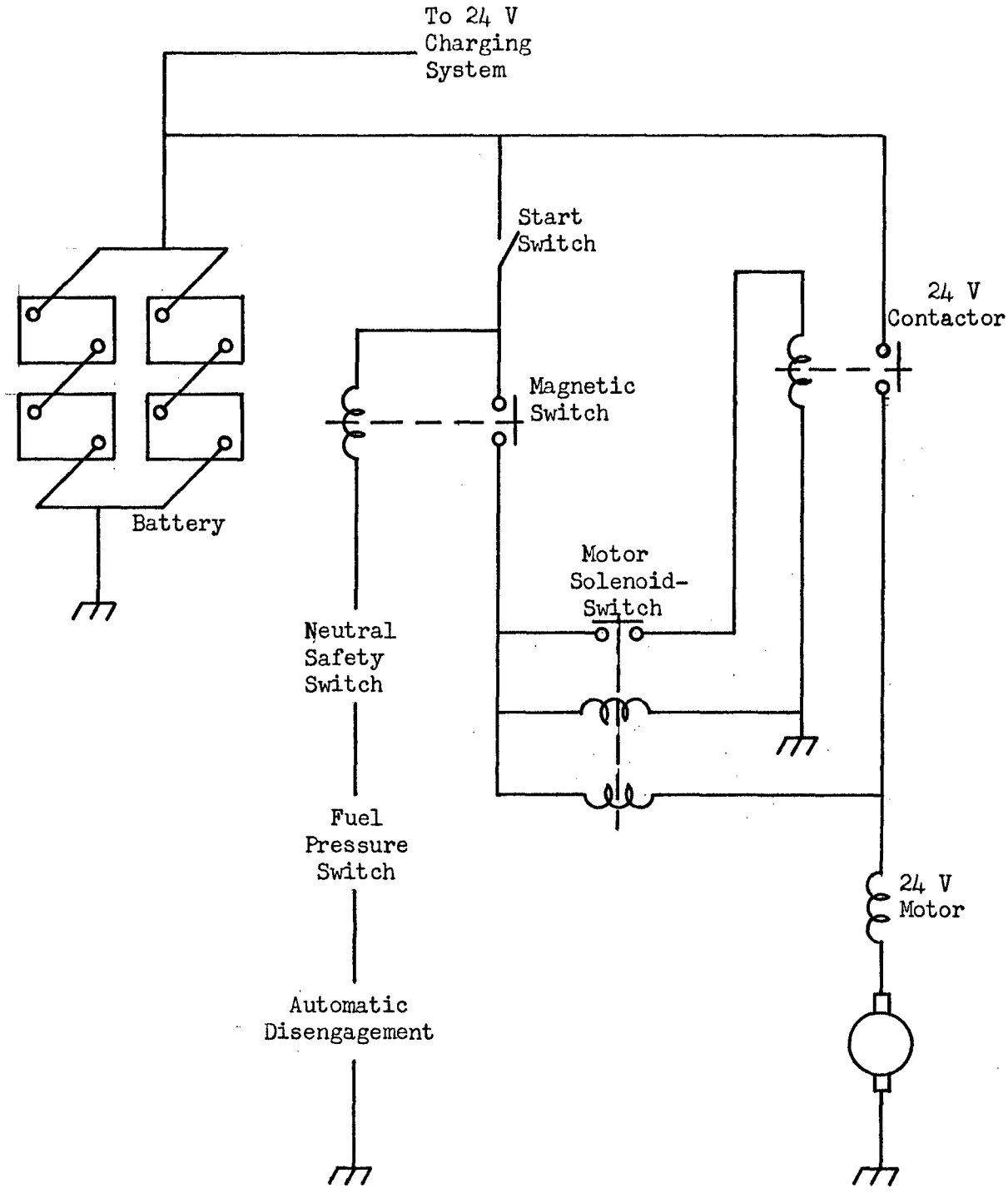

Fig. 10: 24 Volt System
Modified

APPENDIX A
ENGINE
TORQUE-SPEED TEST
(D. R. LABORATORY PROCEDURE CR-1)

ENGINE TORQUE-SPEED TEST

A. Purpose of test

1. To determine the cranking speed-torque requirement of the engine.

2. To determine the proper battery, cranking motor, and gear ratio for the engine.

3. To determine the total cranking capacity of a fully-charged battery for a given engine and set of conditions, such as, oil temperature, etc.

B. Preparation for test

1. Mount the engine on a portable test dolly.

2. Place a thermocouple in an adaptor to fit into the coolant gauge mounting to record coolant temperature (use ethylene-glycol type anti-freeze in the coolant system). Fasten a thermocouple to the engine oil level gauge to check and record engine oil temperature.

3. Install a thermocouple in the electrolyte just above the plates of a center cell of the battery to check and record battery temperature. Use a cycled battery at full charge unless specified otherwise.

   NOTE: Cycling provides a stable battery, which is necessary to qualify test results, and has the effect of gradually increasing battery capacity.

4. The fuel system should be adjusted to the manufacturer's mean specification.

5. A calibrated starting motor should be installed before placing the engine in the cold room. Bearings and armature shaft splines should be lubricated according to drawing specifications.

6. To prepare the engine for each test, the engine is warmed up and the oil in the crankcase is drained while hot, making sure all oil is drained from the reservoir. The engine is filled with the oil to be used in the test, warmed up, and drained. This should be done three times with new oil to assure a complete change when the grade of oil is changed. When the same grade oil is used in successive tests, only one drain is required.

7. Final engine check -- the transmission is placed in a neutral or park position and the engine is run at no load and at approximately 1500 rpm until the coolant warms to 160-180°F and the oil to 105-120°F. Shut off the fuel supply from the fuel tank. Run the engine to use up the fuel completely.

C. Sequence of test

1. Place the engine in the cold room and connect the thermocouple to a potentiometer to observe battery electrolyte, oil, and radiator coolant temperatures. Connect the oscillograph to record the battery voltage, motor voltage, and motor current.

2. The engine should be left in the cold room for a minimum of 4 hours after the temperature has stabilized at the test temperature.

3. Record the air, battery, oil, and coolant temperatures immediately before starting cranking test. The above temperatures are held to plus or minus 1°F of the test temperature.

4. The open-circuit battery voltage is recorded on the oscillograph and observed, as well, by a voltmeter. An appropriate current load is also recorded on the oscillograph using a separate power supply. These readings (deflections for known values) serve to calibrate the oscillograph to interpret the traces made during the cranking test.

5. The starting motor is energized as follows:

   a. Torque requirements -- close the starting motor circuit. Operate for 30 seconds and record the information listed under step 1.
   b. Battery run-down -- close the starting motor circuit and allow the starting motor to crank until the engine speed drops below the minimum cranking speed for starting.

6. The following information should be calculated from the oscillograms to obtain the necessary curves:

   a. Battery voltage at 10, 30, etc., seconds.

   b. Starting motor voltage and current at 10, 30, etc., seconds.

   c. Break-away motor current (current required to start the crankshaft rotating) and motor voltage.

   d. Crankshaft speed in rpm at any particular time during cranking is as follows:

$$\text{Crankshaft speed, rpm} = \frac{\text{No. of Compressions X EDF}}{\text{No. of cylinders X Time, Min.}}$$

Where EDF = Engine Design Factor:
Use 2 for 4 stroke cycle engine
Use 1 for 2 stroke cycle engine

NOTE: The number of compressions is counted over a 5-second period, the time indicated in the formula. This 5-second period includes the 2.5 seconds on either side of the reference time.

e. Crankshaft torque at the 10-second point is calculated as follows:

Crankshaft torque, lb-ft = $T_m \times N_g/N_p$

Where T_m = Cranking motor running torque in lb-ft
This is obtained from the motor calibration curve using the average current draw for one engine cycle (two revolutions for a 4-cycle engine) at the 10-second point -- this appears as an equal number of waves (6 for 6-cylinder engine, 8 for 8-cylinder engine) with half the number on each side of this point. Average current is determined by planimeter calculation on the oscillogram for this period of time.

N_g = Number of teeth on the ring gear.

N_p = Number of teeth on the motor pinion.

f. Time, in seconds, that the cranking motor continues to crank for the full life of the battery.

g. Time, in seconds, from the start of cranking until the cranking speed has slowed to 20 rpm (generally regarded as the minimum speed necessary for starting an engine).

APPENDIX B
ENGINE
STARTING TEST
(D. R. LABORATORY PROCEDURE CR-2)

ENGINE STARTING TEST

A. Purpose of test

1. To determine the maximum crankshaft speed attained during cranking.

2. Time in seconds to first fire and engine to run (partial runs, also).

B. Preparation for test

1. Mount the engine on a portable test dolly.

2. Place a thermocouple in an adapter to fit into the coolant gauge mounting to record coolant temperature (use ethylene-glycol type anti-freeze system). Fasten a thermocouple to the engine oil level gauge to check and record engine oil temperature.

3. Install a thermocouple in the electrolyte just above the plates of a center cell of the battery to check and record battery temperature. Use a cycled battery at full charge unless specified otherwise.
   NOTE: Cycling provides a stable battery, which is necessary to qualify test results, and has the effect of gradually increasing battery capacity.

4. The fuel system should be adjusted to the manufacturer's mean specification.

5. A calibrated starting motor should be installed before placing the engine in the cold room. Bearings and armature shaft splines should be lubricated according to drawing specifications.

6. Winter grade fuel is required.

7. To prepare the engine for each test, the engine is warmed up and the oil in the crankcase is drained while hot, making sure all oil is drained from the reservoir. The engine is filled with the oil to be used in the test, warmed up, and drained. This should be done three times with new oil to assure a complete change when the grade of oil is changed. When the same grade oil is used in successive tests, only one drain is required.

8. Final engine check -- the transmission is placed in a neutral or park position and the engine is run at no load and at approximately 1500 rpm until the coolant warms to 160-180°F. The engine is allowed to idle for 15 seconds and is turned off.

C. Sequence of test

1. Place the engine in the cold room and connect the thermocouple to a potentiometer to observe battery electrolyte, oil, and radiator

coolant temperatures. Connect the oscillograph to record the battery voltage, motor voltage, and motor current.

2. The engine should be left in the cold room for a minimum of 4 hours after temperature has stabilized at the test temperature.

3. Record the air, battery, oil, and coolant temperature immediately before starting cranking test. The above temperatures are held to plus or minus 1°F of the test temperature.

4. The open-circuit battery voltage is recorded on the oscillograph and observed, as well, by a voltmeter. An appropriate current load is also recorded on the oscillograph using a separate power supply. These readings (deflections for known values) serve to calibrate the oscillograph to interpret the traces made during the starting test.

5. Starting procedure

   a. Set throttle according to standard starting conditions.
   b. Close the starting motor circuit.
   c. Simulate normal starting procedure only and continue to crank until a start is obtained or a maximum of 60 seconds.
   d. Make free-for-all attempt (use any means) if no start is obtained.

6. The following information should be calculated from the oscillograms to obtain the necessary curves:

   a. Battery voltage at 10, 30, 60, etc., seconds depending on time when engine starts.
   b. Starting motor voltage and current at 10, 30, 60, etc., seconds depending on time when engine starts.
   c. Break-away motor current (current required to start the crankshaft rotating) and motor voltage.
   d. Crankshaft speed in rpm at any particular time during cranking is as follows:

$$\text{Crankshaft speed, rpm} = \frac{\text{No. of Compressions X EDF}}{\text{No. of Cylinders X Time, Min.}}$$

Where EDF = Engine Design Factor:
Use 2 for 4 stroke cycle engine
Use 1 for 2 stroke cycle engine

NOTE: The number of compressions is counted over a 5-second period, the time indicated in the formula. This 5-second includes the 2.5 seconds on either side of the reference time.

e. Crankshaft torque at the 10-second point is calculated as follows:

Crankshaft torque, lb-ft = $T_m \times N_g/N_p$

Where T_m = Cranking motor running torque in lb-ft. This is obtained from the motor calibration curve using the average current draw for one engine cycle (two revolutions for a 4-cycle engine) at the 10-second point---this appears as an equal number of waves (6 for 6-cylinder engine, 8 for 8-cylinder engine) with half the number on each side of this point. Average current is determined by planimeter calculation on the oscillogram for this period of time.

N_g = Number of teeth on the ring gear.

N_p = Number of teeth on the motor pinion.

f. Time (seconds) to first fire.

g. Time (seconds) to partial run---fires several times but not enough to cause engine to run.

h. Time (seconds) to run.

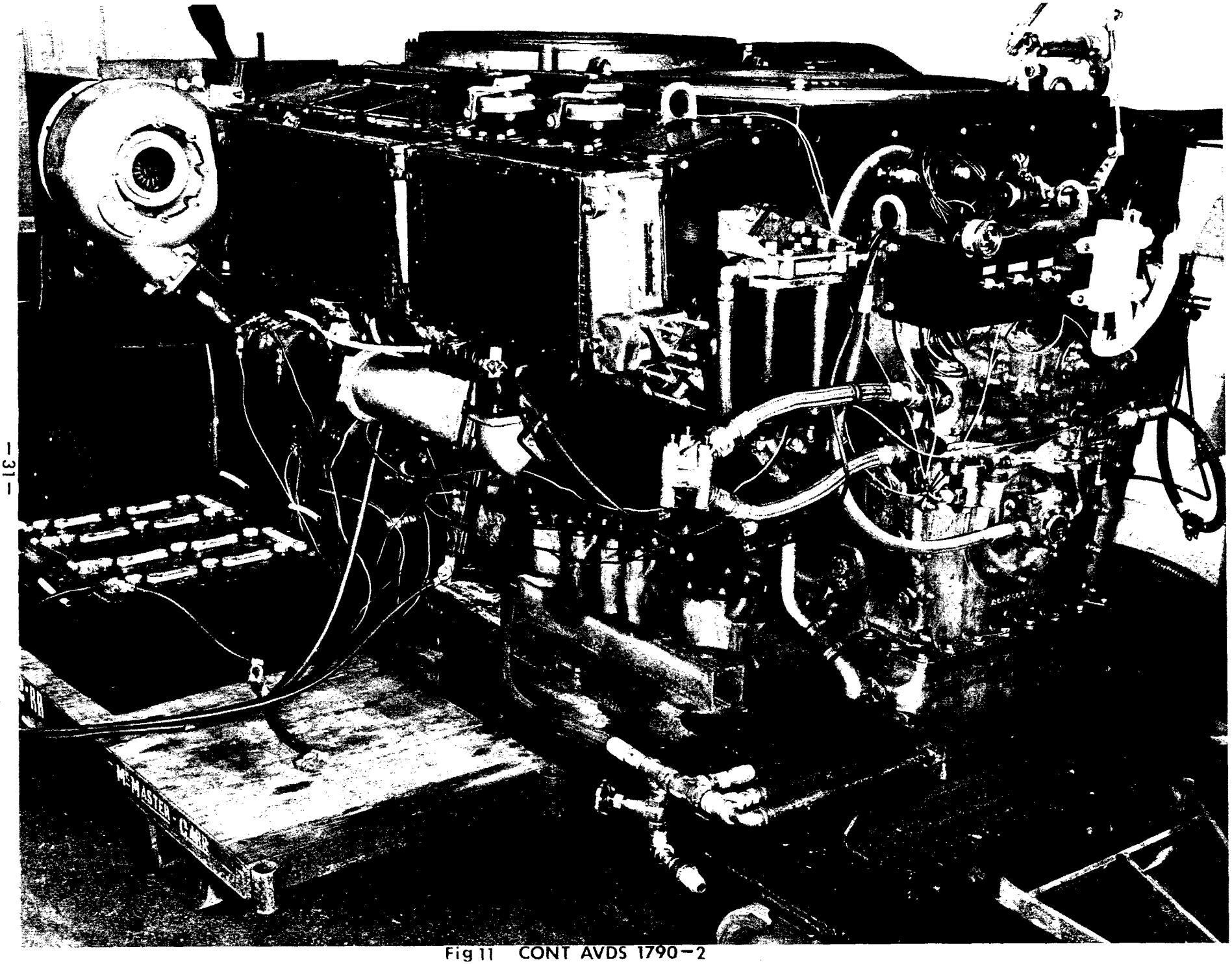

Fig 11 CONT AVDS 1790-2

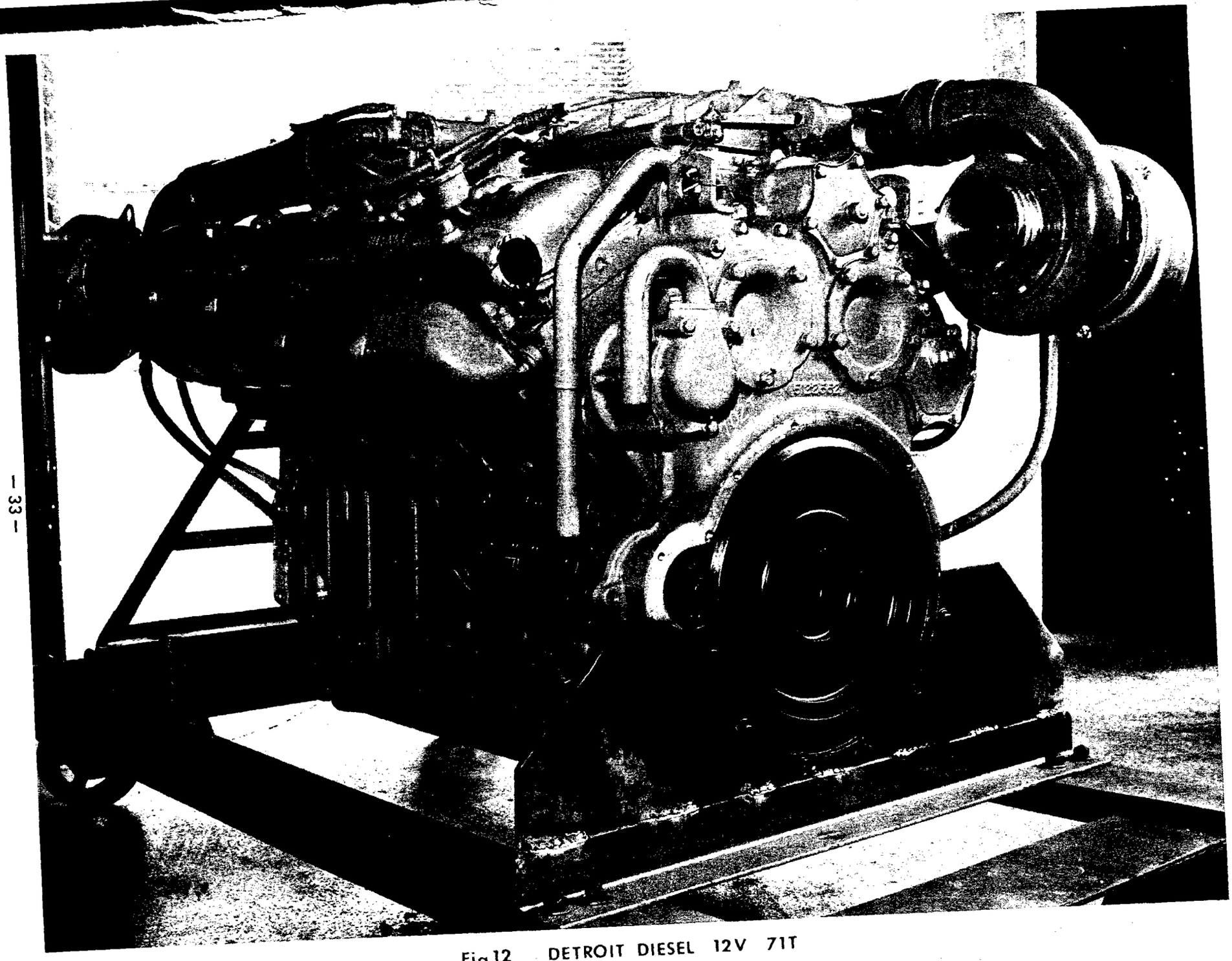

Fig 12 DETROIT DIESEL 12V 71T

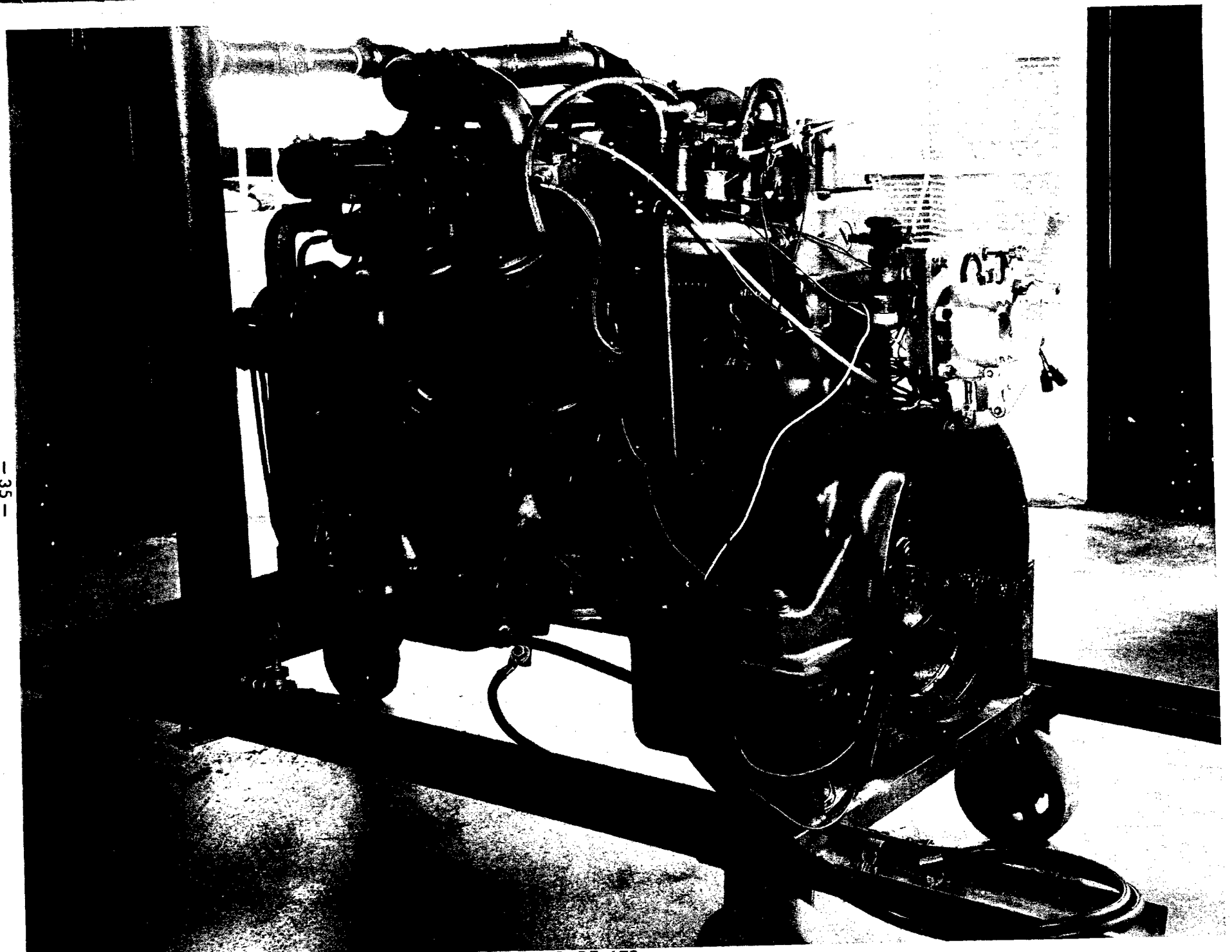

Fig 13 MACK ENDT 673

UNCLASSIFIED

DOCUMENT CONTROL DATA - R & D

(Security classification of title, body of abstract and indexing annotation must be entered when the overall report is classified)

1. ORIGINATING ACTIVITY (Corporate author)
DELCO-REMY DIVISION G.M.C.
ANDERSON, INDIANA

2a. REPORT SECURITY CLASSIFICATION
UNCLASSIFIED

2b. GROUP

3. REPORT TITLE
Feasibility Study of 48 Volt Cranking System

4. DESCRIPTIVE NOTES (Type of report and inclusive dates)
Final Technical Report June 65-May 69

5. AUTHOR(S) (First name, middle initial, last name)
James P. Gale

6. REPORT DATE
May 1969

7a. TOTAL NO. OF PAGES
35

7b. NO. OF REFS
0

8a. CONTRACT OR GRANT NO.
DA-30-113-AMC-06862(T)

b. PROJECT NO.
5521.12.275

c.

d.

9a. ORIGINATOR'S REPORT NUMBER(S)

9b. OTHER REPORT NO(S) (Any other numbers that may be assigned this report)

10. DISTRIBUTION STATEMENT
Distribution of this document is unlimited

11. SUPPLEMENTARY NOTES

12. SPONSORING MILITARY ACTIVITY
U.S. Army Tank Automotive Command
Instrument-Electrical Lab.
Warren, Michigan 48090

13. ABSTRACT

These exploratory tests were conducted to determine the feasibility and advantage of a 48 volt cranking system for military diesel engines.

Cranking requirements were established for three military diesel engines, the purpose of this work was to investigate the feasibility and advantages of a 48-volt cranking system for military diesel engines. Test work was exploratory.

The cranking requirements were established for three military diesel engines: the Continental AVDS-1790-2, the Detroit Diesel 12V71T, and the Mack ENDT 673. An experimental 48-volt cranking system was tested and compared to the present 24-volt system. The 48-volt system did crank faster and it did produce a quicker start on the Mack ENDT-673 engine. Problems associated with the 48-volt system would be motor and contactor development and design of a dual-voltage circuit to integrate the cranking system with other electrical components.

Further study is recommended. Experimental 48-volt cranking systems and improved 24-volt cranking systems should be field tested on various vehicles.

AD-[illegible]

DD FORM 1473 REPLACES DD FORM 1473, 1 JAN 64, WHICH IS OBSOLETE FOR ARMY USE.

UNCLASSIFIED
Security Classification

14. KEY WORDS	LINK A ROLE	LINK A WT	LINK B ROLE	LINK B WT	LINK C ROLE	LINK C WT
48-Volt Cranking	1					
Diesel Engine Cranking			2			
Diesel Engine Starting			3			
Continental AVDS 1790					2	
Detroit Diesel 12V71T					2	
Mack ENDT 673			3		2	