AD 691464

AMRL-TR-68-157

WATER-ELECTROLYSIS CELLS USING HYDROGEN-DIFFUSION CATHODES

EDWIN S. KOLIC

JOHN E. CLIFFORD

Battelle Memorial Institute

FEBRUARY 1969

D D C

AUG 19 1969

This document has been approved for public release and sale; its distribution is unlimited.

AEROSPACE MEDICAL RESEARCH LABORATORY
AEROSPACE MEDICAL DIVISION
AIR FORCE SYSTEMS COMMAND
WRIGHT-PATTERSON AIR FORCE BASE, OHIO

74

AMRL-TR-68-157

WATER-ELECTROLYSIS CELLS USING HYDROGEN-DIFFUSION CATHODES

EDWIN S. KOLIC

JOHN E. CLIFFORD

This document has been approved for public release and sale; its distribution is unlimited.

FOREWORD

This investigation was made by the Columbus Laboratories of Battelle Memorial Institute on Contract No. F 33615-67-C-1515 under Project No. 6373, "Equipment for Life Support in Aerospace", and Task No. 637302, "Respiratory Support Equipment". The work was performed under the direction of the Aerospace Medical Research Laboratories, Aerospace Medical Division, Wright-Patterson Air Force Base, Ohio 45433, and was administered by Richard E. Bennett, contract monitor, Biotechnology Branch, Life Support Division, Biomedical Laboratory.* The work reported here was done between April 1, 1967 and July 15, 1968.

The principal investigators for Battelle Memorial Institute were: J. E. Clifford, Project Leader, and E. S. Kolic, Electrochemist. The work was done under the direction of Dr. C. L. Faust, Chief, Electrochemical Engineering Division.

This technical report has been reviewed and is approved.

C. H. KRATOCHVIL, Colonel, USAF, MC
Commander
Aerospace Medical Research Laboratory

---

*The Biotechnology Branch, Life Support Division, and Biomedical Laboratory were abolished and the Laboratories were redesignated Aerospace Medical Research Laboratory during a reorganization in December 1968.

ABSTRACT

A new type of matrix based on diamond powder was shown to be satisfactory for extended use at over 200 C electrolyte temperature in oxygen-generating electrolysis cells using Pd-25Ag hydrogen diffusion cathodes and operating on a water-vapor feed. Over 2500 hours of essentially 100 percent hydrogen transmission was demonstrated with a small experimental cell containing: 6.35 mm OD x 0.13 mm wall Pd-25Ag tube cathode; platinum screen anode; 250-420 micron-size diamond powder matrix initially impregnated with 80 wt % sodium hydroxide electrolyte. The cell was evaluated in an experimental unit that maintained the cell temperature at 210 ± 4 C and the water-vapor generator at 78 C to provide a water-vapor feed at 340 mm Hg partial pressure for operation at 37 ma/cm^2 cathode current density with a cell voltage of 1.54 volts. At the 97 C limit of the experimental unit for static water-vapor feed, satisfactory operation was shown for a current density of 148 ma/cm^2 at 1.68 volts for over 400 hours before the run was voluntarily terminated. A separate evaluation of a Pd-25Ag cathode alone in a free-electrolyte at 145 C and 37 ma/cm^2 was extended to over 16,000 hours of satisfactory performance for hydrogen diffusion. Supporting experimental studies showed the importance of the many interrelated factors affecting operation of hydrogen diffusion cathodes in alkaline electrolytes: initial electrolyte purity, purity of cell construction materials, cathode preparation, current density, temperature, choice of matrix material and fabrication techniques, and ability to immobilize and retain electrolyte in the matrix for water-vapor feed. Experiments on the use of phosporic acid electrolyte with Pd-25Ag cathodes at 37 ma/cm^2 showed that satisfactory H_2 diffusion was limited to about 45 hours and could be attributed to contamination resulting from anodic corrosion of platinum anodes at 80 C in 85 wt % H_3PO_4.

TABLE OF CONTENTS

		Page
I.	INTRODUCTION	1
II.	EXTENDED OPERATION OF THE HYDROGEN-DIFFUSION CATHODE	6
	Introduction	6
	Results and Discussions	6
III.	ELECTROLYTE TREATMENTS AND CONTAMINATION STUDY	10
	Introduction	10
	Sodium Hydroxide Electrolyte	10
	Electrolyte Treatment E-6	10
	Electrolyte Treatment ET-1	11
	Electrolyte Treatment ET-2	11
	Electrolyte Treatment ET-3	11
	Electrolyte Treatment ET-4	12
	Evaluation of Electrolyte Treatments	12
	Potassium Hydroxide Electrolyte	13
	Phosphoric Acid Electrolyte	13
	Electrolyte Treatment ET-5	14
IV.	ELECTRODE STUDIES	15
	Introduction	15
	Electrode Treatment Procedures	15
	Cleaning Treatment CC-1	15
	Activation Treatment CA-1	16
	Activation Treatment CA-2	16
	Activation Treatment CA-3	17
	Pretreatment CP-1	17
	Pretreatment CP-2	18
	Pretreatment CP-3	18
	Pretreatment CP-4	18
	Pretreatment CP-5	19
	Pretreatment CP-6	19
	Maximum Efficient Current Density	19
	Experimental Determination of Anodic MECD	20
	Description of Experiment	20
	Experimental Results and Discussion	21
	Investigation of Effectiveness of Electrode Treatments	22
	Experimental Procedure	22

TABLE OF CONTENTS
(Continued)

	Page
Experimental Results and Discussion	26
Cathode Overvoltage Study	27
Description of Experimental Work	27
Experimental Results and Discussion	28
V. EXPLORATORY EVALUATION OF MATRIX MATERIALS AND CELL FABRICATION TECHNIQUES	30
Scope of Investigation	30
Preliminary Matrix Screening Study	30
Description of Apparatus and Experiments	31
Experimental Results and Discussion	31
Fuel-Cell Asbestos	31
Boron Nitrides	31
Diamond Powder	34
Preelectrolysis Treatment of Materials	34
As-Received Diamond	34
Sintered Platinum Powder Anodes	35
Description of Matrix Evaluation Experiments and Results	35
Zirconia Cloth (Run 13V)	35
Boron Nitride Powder (Run 6V)	40
Wettable Microporous Teflon Diamond Powder	40
Preparation of Matrix	40
Free-Electrolyte Evaluation (Run 5F)	41
Vapor-Feed Evaluation (Run 5V)	41
Diamond Powder Matrix with Wrapped Platinum Screen Anodes	42
Experimental Run 1F	42
Experimental Run 2F	42
Experimental Run 3F	42
Diamond Powder with Preformed Platinum Screen Anode	43
Free-Electrolyte Evaluation (Run 4F)	43
Vapor-Feed Evaluation (Run 4V)	45
Diamond Powder with Flat Platinum Porous Anode	46
Preparation of Sintered Platinum Powder Anode	46
Vapor-Feed Evaluation (Run 7V)	47
Diamond Powder with Cylindrical Platinum Porous Anode I	47
Experimental Run 8V	47
Experimental Run 9V	49
Experimental Run 10V	49
Experimental Run 11V	50

TABLE OF CONTENTS
(Continued)

		Page
	Diamond Powder with Cylindrical Platinum Porous Anode II	50
	Experimental Run 12V	50
	Experimental Run 14V	51
VI.	EXTENDED OPERATIONAL RUN OF A DIAMOND MATRIX CELL	53
	Cell Construction for Run 15V	53
	Operational Run	54
	Start-Up of Run	54
	Extended Operation	54
VII.	PHOSPHORIC ACID STUDY	59
	Introduction	59
	Summary of Prior Work	59
	Experimental Results and Discussion	60
VIII.	LIST OF REFERENCES	62

LIST OF FIGURES

Figure		Page
1	Vapor-Feed Free-Electrolyte Unit	7
2	Results of Electrolysis with KOH Electrolyte	14
3	Experimental Hydrogen Concentration Cell	20
4	Determination of Anodic MECD at One Temperature Value	23
5	Influence of Surface Treatments on The Cathodic MECD	25
6	Influence of Surface Treatments on The Anodic MECD	25
7	Hydrogen Absorption and Diffusion Effects on Cell Voltage	29
8	Small-Volume Free-Electrolyte Unit, Showing one of Five Cells in the Unit	32
9	Results of Matrix Screening Study	33
10	Electrolysis Cell for Purifying Diamond Powder	34
11	Free-Electrolyte Experimental Unit	38
12	Static Vapor-Feed Experimental Unit	39
13	Experimental Matrix Cell A	43
14	Experimental Matrix Cell B	48
15	Experimental Matrix Cell C	48
16	Enlarged Section of Diamond Matrix Cell of Extended Operational Run	55
17	Start-Up of Extended Operation Run	56

LIST OF TABLES

		Page
Table I.	Summary of Extended Evaluation of A Pd-25 Ag Diffusion Cathode in Free-Electrolyte	9
Table II.	Data of Anodic MECD Determination	21
Table III.	Summary of Cathode Overvoltage Study	27
Table IV.	Summary of Matrix Materials Evaluation	36
Table V.	Free Electrolyte Extended Operational Run of a Diamond-Matrix Cell (Run 4F)	44
Table VI.	Voltage Analysis Data of Diamond Matrix Cell of Run 4F	45
Table VII.	Summary of Extended Operation of Vapor-Fed Diamond Matrix Cell Run 15V	57
Table VIII.	Results of Phosphoric Acid Electrolyte Evaluation . .	60

SECTION I

INTRODUCTION

The present program is a continuation of prior studies of the Pd-25Ag hydrogen-diffusion cathode. The overall program consisted of three concurrent study phases each with a different objective that can be summarized as follows:

Phase I Develop a matrix for use with Pd-25Ag in alkaline electrolyte at 200 C for a minimum of 200 hours

Phase II Define the best matrix for use at temperatures below 200 C if the Phase I goal is unattainable

Phase III Develop a matrix for use with Pd-25Ag in phosphoric acid electrolyte.

A review of the Pd-25Ag hydrogen-diffusion cathode and the interrelation to past study programs at Battelle-Columbus involving electrolysis cells for space applications will enhance understanding of the present program objectives and appreciation of the significance of the results.

The palladium-silver alloy hydrogen-diffusion cathode has been the subject of continuing research and development at Battelle-Columbus since first suggested in 1960 as an improvement to electrolysis cells designed for oxygen recovery in advanced life support systems. The prior work relating to the Pd-25Ag cathode at Battelle-Columbus is contained in seven reports covering fundamental studies and feasibility studies of applications to various life support subsystems. The direction of the present research program is a continuation of prior fundamental studies and should be viewed in the context of the unique features of the solid metal membrane Pd-25Ag hydrogen-diffusion cathode as related to various potential applications.

- For use in water electrolysis cells for oxygen production, an important feature is high-temperature operation (i. e., over 200 C) with aqueous electrolytes while producing dry hydrogen. As a consequence of high-temperature operation, electrolysis cell overvoltage is reduced with advantages to be realized depending on cell design objective of lower power, smaller cell size, or greater oxygen production capacity.

- For interface with a carbon dioxide reduction subsystem, there are two important features of Pd-25Ag diffusion electrodes:

- Ability to act as an electrochemical pump to generate hydrogen at elevated pressure relative to oxygen. The function of preventing intermixing of hydrogen and oxygen resides in the Pd-25Ag cathode operation rather than in the matrix separator as in conventional electrolysis cells. This feature minimizes the dependency on differential gas pressure control in cell design.

- Ability to act as an electrochemical filter to generate pure hydrogen, free of electrolyte carryover and free of water vapor.

- For integration of two subsystems in a single unit, the ability to operate at the temperature of the hydrogenation reaction is important (i. e., Sabatier reaction at 200 C inside a Pd-25Ag cathode tube).

The first criteria of a satisfactory Pd-25Ag cathode is operation with essentially 100 percent hydrogen transmission (although transmission above 95 percent might be acceptable in some applications). The second criteria common to any advanced life support system is reliable extended operation (i. e., 1000 to 10,000 hours) For electrolysis cells this means reliable steady-state electrochemical performance (absence of performance degradation) first, and mechanical design reliability with regard to cell construction and operational controls to be developed later.

Potential applications of the Pd-25Ag cathode involve either use in a free-electrolyte or with a matrix that has the following functions:

- To immobilize and hold the electrolyte in place for oxygen separation from electrolyte for gravity independent operation

- To serve as an electrically insulating separator between the anode and cathode when the electrodes are positioned in close proximity.

Obviously, the applications requiring a matrix present the greatest problem because of the sensitivity of a diffusion cathode to trace contaminants in the electrolyte and the usual problems of matrix degradation in concentrated electrolytes (used at high temperature or for cells operating on water-vapor feed).

The state of the art of the Pd-25Ag cathode at the beginning of this program with reference to prior fundamental studies sponsored by the Aerospace Medical Research Laboratories can be summarized as follows:

- The technical feasibility of obtaining 100 percent hydrogen transmission with Pd-25Ag was demonstrated in the first program (ref 1) up to 265 ma/cm^2 at 230 C and 1.76 volts in an alkaline free-electrolyte for about 1 hour.

- The technical feasibility of a matrix-type cell was demonstrated in the second program (ref 2): 24-hour run with a Teflon thread-calcium hydroxide matrix at 75 ma/cm^2 at 145 C and 2.0 volts with water-vapor feed.

- Extension of the satisfactory operating time of the Pd-25Ag cathode was demonstrated in the third program (ref 3); (1) for free-electrolyte over 10,000 hours at 37 ma/cm^2 at 145 C and 1.74 volts; (2) for asbestos matrix over 200 hours at 37 ma/cm^2 at 70 C; (3) for Teflon/calcium hydroxide matrix about 100 hours at 51 ma/cm^2 at 145 C; 14 hours at 200 C.

The status of preliminary evaluation of various applications of Pd-25Ag cathodes on other programs that existed at the beginning of this program can be summarized as follows:

- Preliminary experiments had indicated that use of the Pd-25Ag cathodes in the rotating electrolysis cell (free-electrolyte application) could increase the oxygen production capacity from 3 men to 21 men (i.e., a current density of 350 ma/cm^2 at 200 C appeared attainable below 2 volts per cell).

- The technical feasibility was shown in an experimental study (ref 4) of a "hydrogen stripper" cell for removing hydrogen from mixed gas streams (i.e., separating hydrogen from decomposition products of methane for Closed Sabatier System). For this free-electrolyte application at temperatures preferrably above 200 C both the anode and cathode were Pd-25Ag hydrogen-diffusion electrodes.

- In the above study (ref 4) the technical feasibility of performing the Sabatier reaction inside the Pd-25Ag cathode was demonstrated in an 800-hour run at current densities over 37 ma/cm^2 at 200 C in a free-electrolyte (applicable to a hydrogen stripper cell for the Closed Sabatier System). An attempt to integrate the Sabatier reaction with a matrix-type Pd-25Ag cell for oxygen generation (applicable to both Open and Closed Sabatier System) was unsuccessful with the available Teflon/calcium hydroxide matrix for operation at the required hydrogenation temperature of 200 C.

Thus, the Phase I objective of the present program was directed toward developing a matrix compatible with a Pd-25Ag cathode when operated at 200 C in an electrolysis cell with water-vapor feed.

- In another program (ref 5) at Battelle-Columbus involving the Bosch hydrogenation system and interfacing with a water-vapor electrolysis system, it was desirable to use Pd-25Ag cathodes to provide hydrogen at positive pressure to feed the Bosch reactor. For this application, the electrolysis unit (1/2-man module with Pd-25Ag cathodes) was operated in a closed loop with water-vapor feed and could be operated at relatively low temperatures (i. e., room temperature or higher temperature offering the best compromise between voltage/current density performance and extended operation before matrix degradation caused contamination of the electrolyte). At the time, the available matrix did not permit satisfactory performance because of problems of water-vapor adsorption and eventually contamination.

Thus, the Phase II objective of the present program was directed toward improved matrices for extended operation at temperatures below 200 C if the Phase I objective were unattainable. Also, there might be reasons why a matrix for 200 C operation might not be the optimum choice for low-temperature applications.

- In another program (ref 6) at Battelle-Columbus, the water-vapor electrolysis cell with phosphoric acid electrolyte (platinum screen cathodes) had been developed as a new approach to oxygen generation based on using water-vapor contained in cabin air. The acid electrolyte was required to avoid carbon dioxide contamination. In the application of the latter electrolysis unit to accomplish concurrent dehumidification and partial cabin humidity control while operating on cabin air, oxygen would be generated at the ambient cabin pressure (5-10 psia). Design considerations relating to cabin decompression and providing hydrogen feed to hydrogenation systems at positive pressures (3-20 psi) above cabin pressure, suggested that the use of Pd-25Ag hydrogen-diffusion cathodes in the acid cells would be advantageous. Preliminary feasibility experiments in prior work (ref 3) had indicated that attainment of 100 percent hydrogen diffusion was possible in a free-electrolyte of phosphoric acid under steady-state conditions (i. e., 4 hours at 37 ma/cm^2 at 60 C).

Thus, the Phase III objective of the present program related to further study of the Pd-25Ag cathode in phosphoric acid directed toward developing a matrix-type cell that could be used on cabin air at about room temperature (cell temperature of 25-80 C).

SECTION II

EXTENDED OPERATION OF THE HYDROGEN-DIFFUSION CATHODE

INTRODUCTION

In a prior program at Battelle-Columbus (ref 3), an experiment was initiated to evaluated the extended operational reliability of a Pd-25Ag cathode independent of a matrix material. The experiment was carried out in a static vapor-feed free-electrolyte cell shown in Figure 1. The unit, which was designed for extended operation, consisted of a water reservoir top section that provided vapor-feed to the bottom electrolysis section. The cell was instrumented for automatic regulation and performed satisfactorily for long periods when left unattended.

At the conclusion of the prior program, the unit was still performing satisfactorily and H_2-transmission of 99-100 percent had been obtained for 486 days at the following conditions:

Electrolyte	66 wt % NaOH
Cell temperature	145 C
Cathode	Pd-25Ag tube with one end closed; 6.35-mm OD x 7.62 cm long x 0.13-mm wall
Cathode current	560 ma
Cathode current density	37 ma/cm^2
Anode material	Pure platinum
Cell material	Teflon.

Since the automated cell required relatively little maintenance, the reliability experiment was continued after termination of the latter program, and periodic checks for 100 percent H_2-transmissions were resumed in this program

RESULTS AND DISCUSSIONS

The essential results of the evaluation are summarized in Table I. The data shown for the first 486 days of operation are reproduced from the prior work. Since that time, satisfactory operation of the cell was maintained for an additional 204 days. Thus, the total operational time of the unit was nearly 2 years (over 16,000 hours).

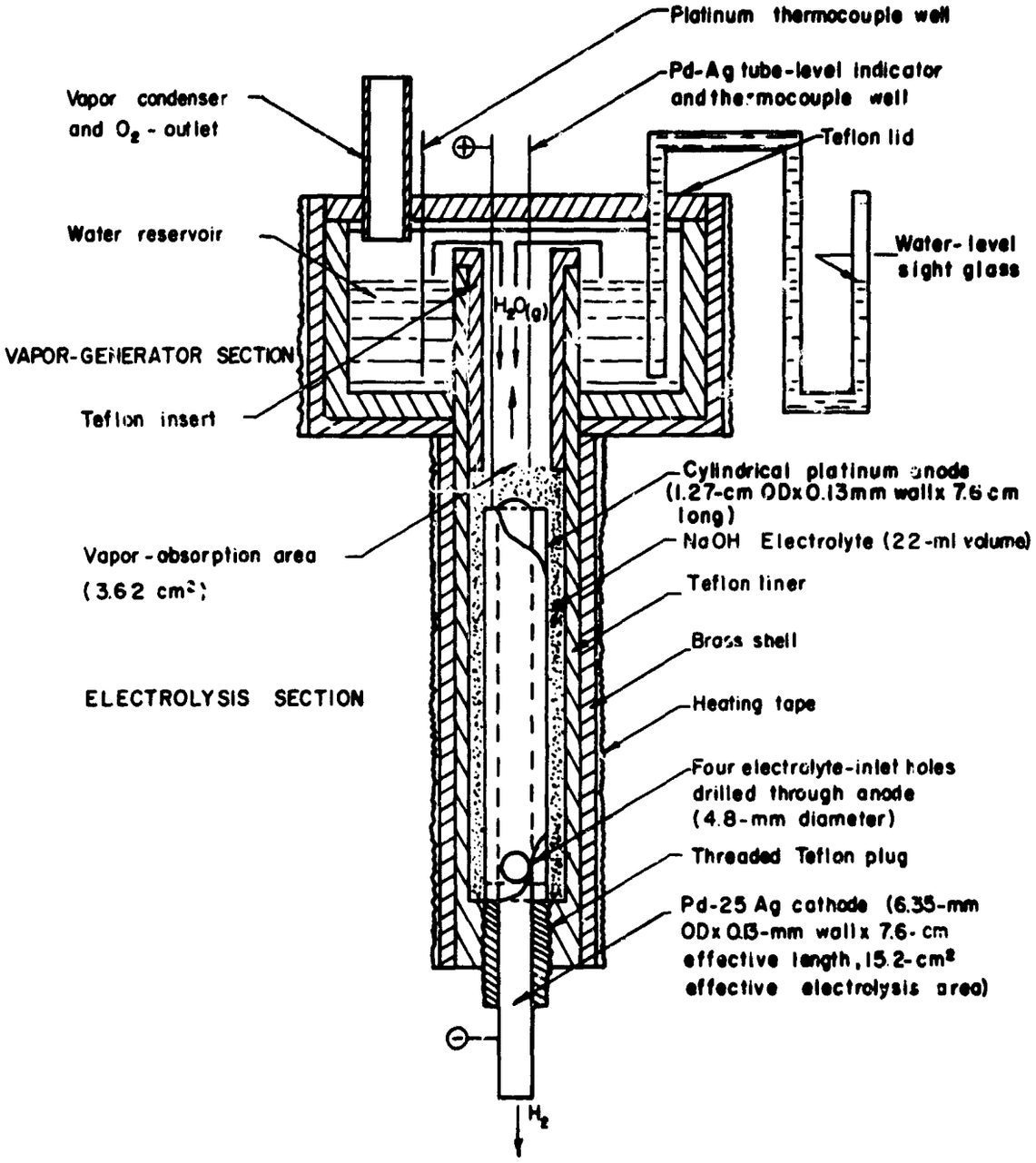

FIGURE 1. VAPOR-FEED FREE-ELECTROLYTE UNIT

The first failure that occured during the 204-day extended period resulted in solidification of the electrolyte but no permanent damage to the cell. The second failure resulted in flooding of the cell and loss of electrolyte.

Since sufficient operational time had been accumulated, the experimental run was terminated after the latter problem was encountered. The last recorded data of satisfactory H_2-transmission was taken after 678 days of operation.

After termination of the run, the cell was disassembled and the following visual observations were noted:

- The solid cylindrical bright-platinum anode was unetched and had the same appearance as on the day of installation. The anode was constructed from pure bright-platinum foil. Thus, the metal is apparently satisfactory for cell operations exceeding 2 years.

- The electrolyte contained a small amount of a dark precipitate that was assumed to be the product of corrosion of the Pd-25Ag thermocouple well (the cause of experiment interruption at 593 days of operation).

- The surface of the cathode contained a relatively thick, dark nonadherent powdery deposit that could be removed by wiping with a hand tissue. A thin smoky film remained adjacent to the surface after wiping. However, the deposits apparently were not detrimental to H_2-transmission. The coatings were suspected to be cathodic deposits of the above mentioned precipitate (palladium-black metal).

TABLE I. SUMMARY OF EXTENDED EVALUATION OF A Pd-25Ag DIFFUSION CATHODE IN FREE-ELECTROLYTE

Days of Continuous Operations	Accumulative[a] Operational Days	Cause of Interruption in Operation	Duration of Interruption	Average Measured Values[b]	
				Cell Voltage, volts	H_2 Transmission, percent
6	6	Level sensor set too low	2 hours	1.64	99.3
108	114	Power failure	30 seconds	1.73	99.8
61	175	Power failure	5 minutes	1.76	99.5
61	236	Performed voltage analysis	5 minutes	1.75	100.3
5	241	Control setting too low	1 hour	1.77	100
104	345	Power failure	64 hours	1.72	100
141	486	No failure (reporting period)[a]	--	1.73	100
107	593	Level-sensor failure	4 hours	1.74	100
85	678	Last recorded data of satisfactory operation	--	1.75	100
87	680	Electrolyte level relay failure, run terminated	--	1.78	91

(a) Data for the first 486 days of operation reproduced from prior work (ref 3).

(b) Refers to average values up to the time of either polarization, power failure, or termination. Other values were constant throughout the experimental run: current, 560 ± 8 ma; cell temperature, 145 ± 5 C; and vapor-generator temperature, 73 ± 5 C.

SECTION III

ELECTROLYTE TREATMENTS AND CONTAMINATION STUDY

INTRODUCTION

The purity of the aqueous alkaline electrolyte prepared for use in experimental cells or free-electrolyte experiments with Pd-25Ag cathode has an important effect on the duration of satisfactory performance (100 percent H_2-transmission). Prior studies (ref 3) had shown that electrolytes prepared from NaOH pellets and distilled water were initially contaminated because of impurities contained in the C.P. chemicals. A preelectrolysis treatment procedure was developed in prior work (Treatment E-6) (ref 3) and evaluated with satisfactory results based on a specific lot number of chemicals from one supplier (Lot 32217, J.T. Baker Chemical Company).

During the present program, it became necessary to use NaOH pellets of a new lot number and the prior preelectrolysis procedure was no longer satisfactory. Further study was required on this program to develop new treatment procedures to insure that the initial electrolyte condition would not adversely affect Pd-25Ag cathodes during extended operation (i.e., >1000 hours). The primary emphasis was on sodium hydroxide electrolyte which has been used almost exclusively for the past 3 years in studies at Battelle-Columbus. In addition, preliminary results and treatment procedures for potassium hydroxide electrolyte and phosphoric adid electrolyte are included at the end of this section of the report.

SODIUM HYDROXIDE ELECTROLYTE

Four sodium hydroxide electrolyte treatment procedures (ET-1, ET-2, ET-3, and ET-4), were evaluated in the program. They are described below. For comparison purposes, treatment E-6, which was found to be satisfactory in the prior work is also included.

Electrolyte Treatment E-6 (ref 3)

Electrolyte treatment E-6 is an end result of four specific treatments procedures (E-3, E-4, E-5, and E-6), which were evaluated in the prior electrolyte study.

1. (E-3) Preelectrolysis of 70 wt % NaOH solution at 500 ma/cm^2 (5 amperes) and 150 C for 48 hours, using platinum-foil electrodes, followed by dilution to 50 wt % concentration

2. (E-4) Treatment E-3, plus further preelectrolysis for 24 hours at 500 ma/cm^2 and 50 C, using platinum-foil electrodes

3. (E-5) Treatment E-4, plus further preelectrolysis for 72 hours at 40 ma/cm^2 (5 amperes) and 50 C, using Pt-10Rh-screen electrodes (80 mesh, 3-mil wire)

4. (E-6) Treatment E-5, plus further preelectrolysis for 72 hours at 300 ma/cm^2 (5 amperes) and 50 C, using Pt-10Rh-screen electrodes (80 mesh, 3-mil wire).

Electrolyte Treatment ET-1

Preelectrolysis of 1.8 liters of 70 wt % NaOH solution at 500 ma/cm^2 (5 amperes) and 150 C for 48 hours, using 80 mesh 3-mil platinum-screen electrodes (3 x 3.3 cm) followed by dilution to 50 wt % concentration and further preelectrolysis at 50 C and 300 ma/cm^2 for 72 hours.

Electrolyte Treatment ET-2

Same as treatment ET-1 except electrolysis at the lower temperature was extended from 72 to 192 hours.

Electrolyte Treatment ET-3

A 50% NaOH solution which was prepared as follows:

- Dissolved 960 grams of pellets in 960-ml of distilled water while stirring

- Carbon treated solution with Darco grade S-51 type activated carbon: (a) 5 grams of carbon was stirred into the solution at 85 C, (b) after a 1-hour period, the temperature of the solution was lowered to 25 C, and (c) the solution was vacuum filtered through an acid washed asbestos pad.

Preelectrolysis was carried out at 300 ma/cm^2 current density at 55 C (114 hours) and at 130 C (70 hours) using 80-mesh platinum screen electrodes of 10 cm^2 area.

Electrolyte Treatment ET-4

Preelectrolysis of 600-ml of 50 wt % NaOH solution at 180 ma/cm^2 current density (1.8 amps) and 100 C for 72 hours using 80 mesh 3-mil wire platinum screen electrodes of 3.3 x 3.3 cm size.

EVALUATION OF ELECTROLYTE TREATMENTS

The principal problem encountered with sodium hydroxide electrolytes in this program was the complete removal of a harmful contaminate that normally plated out (yellow deposit on the anode) during low-temperature electrolysis treatment. The contaminate was found to be associated with electrolytes formulated from pellets bearing three different lot numbers (32217, 37069, and 34420) but from the same supplier (J. T. Baker Chemical Company).

Electrolyte treatment ET-1 is a simplified form of treatment E-6. The modified procedure was suitable (satisfactory H_2-transmission for 1300 hours is shown later in Figure 9) for treating electrolyte formulated from pellets of lot number 32217, which was used in the major portion of the experimental work in this program. Unsatisfactory results were obtained with the treatment, however, when it became necessary to use pellets from the other lots. Extension of the low-temperature electrolysis time from 3 to 8 days (treatment ET-2) did not result in achieving a satisfactory electrolyte as evident by a yellow film obtained on the anode and acceptable H_2-transmission for only a 1-hour period when the resulting electrolyte was tested at 130 C with a Pd-25Ag cathode tube.

The contaminate responsible for obtaining the yellow anodic deposit was removed by a carbon treatment with procedure ET-3. An electrolysis treatment after the carbon treatment was experimentally found to be necessary in order to obtain a suitable electrolyte. The treatment evaluation was performed with electrolytes prepared from pellets of lot number 34420. The characteristic yellow anodic deposit was not evident after the electrolysis treatment period, but a dark deposit was obtained on the cathode screen and was assumed to be heavy metals (normally, th heavy metals were removed in the high-temperature treatments of E-6 and ET-1). The resulting electrolyte yielded satisfactory results in a 65-hour run at 130 C and 37 ma/cm^2 CD. Acceptable H_2-transmission was still being obtained when the run was terminated. Further work with carbon-treated electrolytes was not pursued since results of two concurrent experiments with electrolytes formulated from other grades of sodium hydroxide showed promise with the more simplified treatment procedure of ET-4.

The other grades of sodium hydroxide investigated were: (1) Dow Chemical Co. technical grade flakes; and (2) Baker C.P. special carbonate-free pellets. Satisfactory H_2-transmission results were obtained in experiments performed

at 37 ma/cm^2 CD with electrolytes formulated from both grades after treatment ET-4: about 450 hours with the technical grade flakes at 100 C, and 840 continuous hours with the carbonate-free pellets at 125 C. Satisfactory H_2-transmissions were being obtained in both tests when the experiments were terminated. Essentially, the 1-step procedure of treatment ET-4 is the same as that used in prior years before a chemical purity problem was encountered.

Of the various grades of caustic investigated, the preferred grade was Baker's C.P. carbonate-free pellets (lot number 37716), and the preferred treatment was procedure ET-4. Electrolyte formulated from this combination was shown to be satisfactory for 2728 hours in a vapor-feed extended operational run of a matrix type cell which is discussed in Section VI.

POTASSIUM HYDROXIDE ELECTROLYTE

Unexpected H_2-transmission results were obtained in a free-electrolyte evaluation of potassium hydroxide electrolyte (45 wt % KOH) at 100 C. A summary of the evaluation is shown in Figure 2. Satisfactory H_2-transmission was not obtained in the run (although no H_2-evolution at cathode was noted) until a hydrogen diffusion anode was installed in the cell to avoid oxygen generation. Apparently, undiffused hydrogen, which was evident from gas measurement, was catalytically recombining with the oxygen at the surface of an electrode. The same result, heretofore, has not been observed in experimental runs performed with sodium hydroxide, and points out difference between the two electrolytes that should be studied in future work.

The potassium hydroxide electrolyte was prepared from Baker's C.P. pellets of lot number 30374. The electrolyte was first purified by preelectrolysis at 300 ma/cm^2 CD and 50 C for 90 hours using platinum screen anodes (80 mesh, 10 cm^2 area). No deposit was obtained on the anode, but a dark cathodic deposit was obtained on the cathode that was soluble in 37 percent hydrochloric acid solution at 24 C. After a second preelectrolysis period for 24 hours at the same conditions, no deposits were noted on either electrode. The evaluational run was performed in a free-electrolyte unit which is shown later in Figure 11.

PHOSPHORIC ACID ELECTROLYTE

Phosphoric acid electrolyte which was used in studies described in Section VII was treated by procedure ET-5 which follows. No problems were identified with the treatment procedure during limited evaluations.

Electrolyte Treatment ET-5

Preelectrolysis of 1.8 liters of 85 percent phosphoric acid solution at 50 C using 80 mesh, 3-mil wire Pt-10 Rh alloy electrodes of 25 cm^2 area, and 200 ma/cm^2 current density for 18 hours.

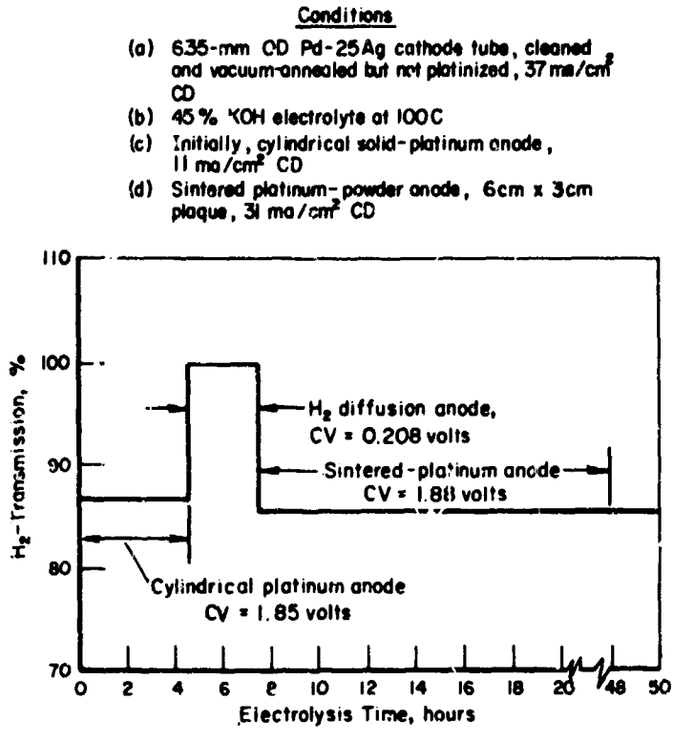

FIGURE 2. RESULTS OF ELECTROLYSIS WITH KOH ELECTROLYTE

SECTION IV

ELECTRODE STUDIES

INTRODUCTION

The experimental work in this section relates to an investigation to study various techniques of activating and pretreating Pd-25Ag electrode tubes to attain better diffusion characteristics. The effectiveness of resulting surface treatments as related to the diffusion of hydrogen both cathodically and anodically was compared, and the contribution of cathode overvoltage of preferred treatments to the cell voltage was studied. The cathodic diffusion data were required as a prelude to Phase III Studies, Phosphoric Acid Electrolyte (Section VII) where the emphasis was on low temperature operation (30-80 C). Data relating to the anodic diffusion (i.e., anodic reaction of consuming hydrogen) were obtained as a feature of interest for integrating the Pd-25Ag electrode into advance oxygen-recovery systems that utilize hydrogen for subsequent reduction of carbon dioxide (e.g. Sabatier or Bosch systems).

ELECTRODE TREATMENT PROCEDURES

The following is a list of electrode cleaning, pretreatment, and activation procedures that resulted from work discussed in this section or in palladium-silver studies of prior programs carried out at Battelle-Columbus. The term "electrode activation" means physical or chemical treatment of the surface of an electrode without the introduction or application of catalytic materials. Whereas, "electrode pretreatment" means the application of a catalyst, such as a metal black coating, or the physical introduction of a catalyst material.

Cleaning Treatment CC-1
(mechanical cleaning of the gas-phase side)

- The gas-phase side (inside surface) of Pd-25Ag electrodes were scrubbed with ferric oxide powder followed by a water rinse.
- The gas-phase side was scrubbed with detergent soap (Alconox) and water rinsed.
- The electrodes were soaked for a 1-hour period in 37 vol % HCl solution and distilled water rinsed.

Activation Treatment CA-1 (ref 3)

(treatment applied to the cathode of the reliability evaluation run which is described in Section II)

(1) The cathode was made cathodic in 60 percent NaOH electrolyte for 15 minutes at a current density of 115 ma/cm^2 and an electrolyte temperature of 100 C. Pure platinum foil was used as anode material.

(2) The cathode was flamed to cherry-red in the flame of a Bunsen burner for approximately 1 minute.

(3) Step (1) was repeated.

(4) The cathode was electrolyzed anodically for 10 minutes at conditions given in Step (1).

(5) Step (1) was repeated.

(6) After water rinsing, the gas-phase side (inside) of the tube was filled with warm (~32 C) 37 percent HCl solution.

(7) After about a 3-minute period, the HCl solution was removed, and the cathode tube was thoroughly rinsed with distilled water and dried with hand tissues.

(8) Step (2) was repeated.

Activation Treatment CA-2 (ref 3)

(anodic treatment of the gas-phase side with HCl solution)

(1) The inside of the tube was filled with an aqueous solution of 37 wt % hydrochloric acid.

(2) The inside of the tube was then electrolyzed anodically at 36 ma/cm^2 for 75 seconds at 23 C. A platinum rod 1.2 mm in diameter was used as the cathode.

(3) The inside of the tube was rinsed with distilled water.

(4) The tube was then cathodically electrolyzed at 37 ma/cm^2 in 60 percent NaOH electrolyte at 130 C.

(5) If 100 percent H_2-transmission was not obtained in Step (4), Steps (1), (2), and (3) were repeated.

Activation Treatment CA-3 (ref 3)
(Vacuum annealing)

- The tubes were held in a tantalum crucible, 8.9-cm OD by 15 cm in length.
- The crucible was positioned in the heated zone of a high-vacuum heat-treating furnace. The furnace contained a tantalum element and had a heated zone 11 cm in diameter by 18-cm in length.
- After the furnace was closed, the atmosphere was decreased to about 5×10^{-5} mm Hg.
- The controller was then set for 650 C, and about 12 minutes were required to attain temperature.
- The tubes were maintained at the 650 C temperature and 5×10^{-6} mm Hg pressure for a period of 1 hour.
- The tubes were allowed to cool to 28 C while under vacuum for a period of about 6 hours.
- After cooling, the unit was pressurized to atmospheric conditions, and the tubes were then removed.

Pretreatment CP-1 (ref 4)
(application of rhodium-black coating on the gas-phase side)

- A 6.35-mm-OD Pd-25Ag tube was annealed in argon at 850 C for a 2-hour period.
- The inside of the tube was electroplated with a rhodium deposit from a 0.001 M solution of $RhCl_3$ adjusted to pH 1 with HCl. Conditions for plating were: a current density of 70 ma/cm^2, 24 C, 5-second time period, and a platinum-rod anode. It is estimated that about 0.1 mg/cm^2 of rhodium-black was deposited.
- The tube was given two heat treatments in an atmosphere of air: 2 hours at 850 C and 2 hours at 700 C.

Pretreatment CP-2

(application of platinum-black coating on the gas-phase side)

- Tube was charged cathodically at 120 ma/cm^2 CD in the electrolyte used in the experiment for 10 minutes. Electrolyte temperature was 60 C.

- After water rinsing, the inside of the tube was filled with platinizing solution up to level of about 1 inch above the active cathode length. Platinizing solution consisted of 7.1 grams of $H_2PtCl_6 \cdot 6H_2O$ (5 oz. of 5 percent $PtCl_2$ solution), 10 mg of Pb $(C_2H_3O_2)_2$ (lead acetate), 10 ml of 37 percent HCl, and distilled water to make a 500 ml volume.

- The platinizing reaction was allowed to proceed for 3 minutes at 24-26 C after which the inside of the tube was flushed with distilled water.

Pretreatment CP-3

(application of palladium-black coating on the gas-phase side)

(1) Tube was charged cathodically at 120 ma/cm^2 CD for 10 minutes in the electrolyte use in experiment. Electrolyte temperature was 60 C.

(2) After water rinsing, the tube was filled with palladizing solution up to a level of about 1 inch above the active cathode length.

(3) The palladizing reaction was allowed to proceed for 3-minute period at 24-26 C after which the tube was rinsed with distilled water. The palladizing solution consisted of 4 grams $PdCl_2$ dissolved in 20 ml of 37 percent HCl, and then diluted with distilled water to make a 500 ml volume.

Pretreatment CP-4

(application of palladium-black coating on the electrolyte side)

- Same as Step (1) of pretreatment CP-3 above.

- Electrolyte side of tube was palladized by a 30-second dip in the palladizing solution (described in Step (3) of CP-3) at 24-26 C.

- Tube was flushed with distilled water.

Pretreatment CP-5

(application of rhodium-black coating on the gas-phase side)

- Tube was charged cathodically at 120 ma/cm^2 CD in the electrolyte use in experiment for 10 minutes. Electrolyte temperature was 45 C.

- Tube was removed, water rinsed, and rhodium solution was poured into the tube up to a level of about the desired active electrode length. The rhodium solution consisted of one gram of rhodium trichloride dissolved in 5-ml of 37 percent HCl, and water to make a 125 ml volume.

- The tube containing the rhodium solution was electrolyzed cathodically at 37 ma/cm^2 CD for 1 minute at the 45 C electrolyte temperature.

- The inside of the tube was flushed with distilled water.

Pretreatment CP-6

(introduction of ruthenium/asbestos catalyst)

The inside of Pd-25Ag tube was loosely packed with a mixture of 10 wt % ruthenium powder on asbestos catalyst.

MAXIMUM EFFICIENT CURRENT DENSITY

The effectiveness of the electrode treatments, which is discussed in the following section, is compared on the basis of diffusion rate constants or MECD. The MECD is defined as the maximum efficient current density that can be applied to an electrode while, diffusing hydrogen at 100 percent efficiency. A method for experimentally determining the cathodic MECD was developed in prior work (ref 3). Since anodic MECD data was desired, the same procedure was tried on a Pd-25Ag anode tube. The method was found to be successful as shown by the results of the following experiment. Since in the experiment the tube was packed with ruthenium/asbestos catalysts (pretreatment CP-6), a secondary result was the establishment of a rate constant for that particular pretreatment.

EXPERIMENTAL DETERMINATION OF ANODIC MECD

Description of Experiment

The experimental work was performed using a hydrogen concentration cell shown in Figure 3. The Pd-25Ag electrodes were mechanically cleaned by procedure CC-1. After cleaning, the effective active length of the tubes (~6cm) were loosely packed with a mixture of 10 wt % ruthenium power on asbestos (pretreatment CP-6). No other treatments such as vacuum-annealing or metal-black catalyst applications were applied to the electrodes. Pure, dry hydrogen gas generated from another palladium-silver electrolysis cell was fed to the anode tube at the rate of 4.4 ml/min NTP. Effluent hydrogen from the anode was vented to a hood in a flow-through system. The 4.4 ml/min hydrogen feed rate was sufficient for sustaining an anode operational current density of 46.6 ma/cm^2 (560-ma drain). The electrolyte consisted of 50 wt % sodium hydroxide solution which, prior to use, was preelectrolyzed by procedure ET-1 of Section III. No attempt was made to regulate the cell as to maintain constant temperature. Thus due to heat of electrolysis, a small rise in electrolyte temperature (from 26 C ambient to 30 C) was obtained during the course of the experiment.

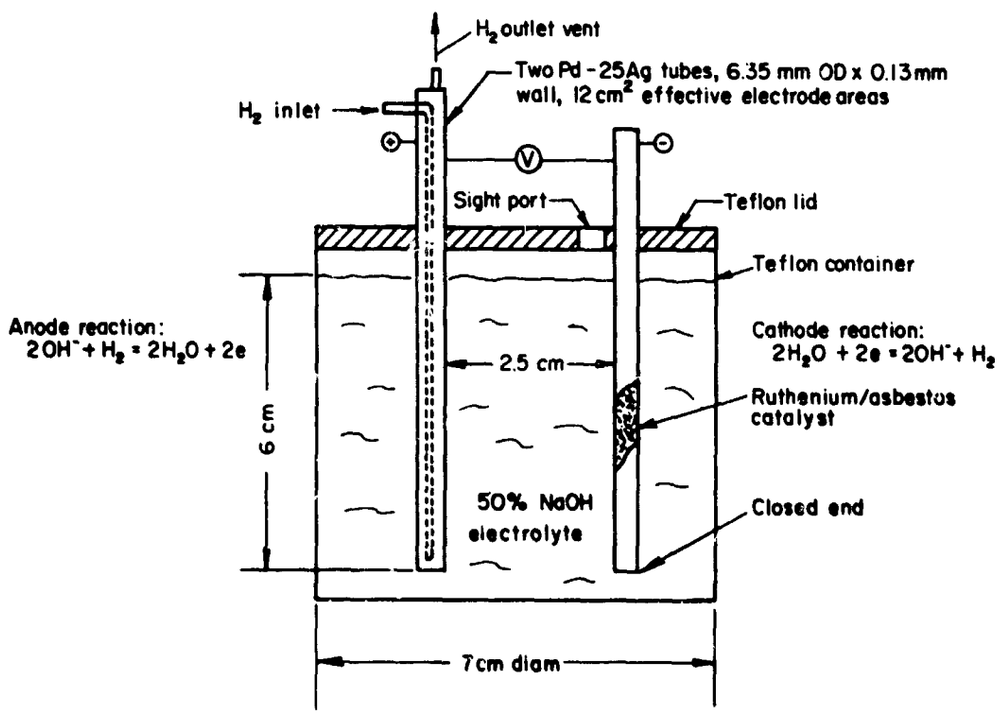

FIGURE 3. EXPERIMENTAL HYDROGEN CONCENTRATION CELL

The experimental work was carried out in two parts. In the first part, the cell current (initially low) was gradually increased in increments while recording cell voltages and electrolyte temperatures. The objective of this part of the study was to identify the maximum current density that could be applied to the cell under steady state conditions while maintaining 100 percent hydrogen diffusion efficiency at the electrodes, e.g., operation of the cell at less than 1 volt. Polarization at the cathode (evolution of hydrogen) could be visually established by the sight-port provided for in the cell lid.

In the second part, the MECD was obtained by methods developed in prior work (ref 3) which consisted of initial application of a sufficiently high current on the electrode so as to cause polarization (anode potential >1 volt), followed by incremental decrease in current until a break is obtained in the recorded voltage/current-curve.

Experimental Results and Discussion

The hydrogen concentration cell was operated for 46 continuous hours. Data recorded during the run is shown in Table II. The current-voltage

TABLE II. DATA OF ANODIC MECD DETERMINATION

Accumulative Time, hr	Cell Voltage, v	Cell Current, ma	Cell CD ma/cm^2	Cell Temp, C	Remarks
0.0	--	--	--	26	Start H_2 feed to anode, rate 4.4 ml/min
0.25	0.435	--	--	26	Open-circuit voltage, anode electrode negative
0.25	0.575	50	4.1	26	Start electrolysis
1.0	0.536	50	4.1	26	
1.0	0.688	100	8.2	26	Increased current density
2.0	0.630	100	8.2	---	
18.0	0.669	100	8.2	26	
18.0	0.795	150	12.3	26	Increased current density
21.5	0.810	150	12.3	---	
21.5	--	--	--	27.5	Ran current-voltage curve for MECD
23.5	0.863	185	15.1	--	Increased current density
25.5	0.840	185	15.1	30	
39.5	0.860	185	15.1	28	
39.5	0.150	--		-	Open circuit voltage, anode electrode positive
40.0	0.910	200	16.4	-	Increased current density
41.0	0.937	200	16.4	28	
44.0	0.935	200	16.4		
44.0	0.975	225	18.5		Increased current density
44.5	0.940	225	18.5	-	
44.5	0.175				Open-circuit voltage, anode electrode positive
45.5	1.00	225	18.5	29	No hydrogen evolution at the cathode
46.0	1.01	225	18.5	29	Terminated run

values taken to perform a graphical determination of the MECD are plotted in Figure 4. The latter values were taken after 21-1/2 hours of operation.

The data of Table II indicated that the anode was just capable of sustaining 16.4 ma/cm^2 at 28 C, but not 18.5 ma/cm^2 at 25 C. No hydrogen evolution at the cathode was noted when the latter values were recorded, which indicated that the cathodic MECD was not achieved during the run. Interpretation of the current-voltage curves of Figure 4 shows that the maximum efficient current density at 27.5 C electrolyte temperature was about 15.7 ma/cm^2. This value agrees quite well with the steady-state MECD value of 16.4 ma/cm^2 obtained for 28 C, and indicates that the extrapolation technique developed for determining cathodic MECD is applicable for determining anodic MECD.

The experimentally determined MECD shown in Figure 4 is compared with results of prior work in Figure 6. The 15.7 ma/cm^2 rate constant (curve 10, Figure 6) essentially falls on a temperature dependence curve of a Pd-25Ag anode which was rhodium treated and packed with ruthenium/asbestos catalyst (curve 9, Figure 6). Apparently, the rhodium pretreatment of the latter electrode was not required to obtain the anodic performance that is exhibited in Figure 6, and a simple application of ruthenium/asbestos catalyst alone would have resulted in obtaining the same MECD rate constants.

INVESTIGATION OF EFFECTIVENESS OF ELECTRODE TREATMENTS

The effectiveness of the various pretreatment and activation procedures were studied in an experiment which is described below.

Experimental Procedure

The surface treatment investigation was carried out in a free-electrolyte cell (Figure 11). Effectiveness of the various pretreatments and activation studied were based on experimentally determined MECD rate constant values obtained by extrapolation technique from current-voltage curves described above. Only one Pd-25Ag tube (6.35 mm OD x 0.13 mm wall) was used in the experimental work. The experiment consisted of the following runs performed in the order shown:

Run A. Obtained cathodic MECD constant for cleaning procedure CC-1.

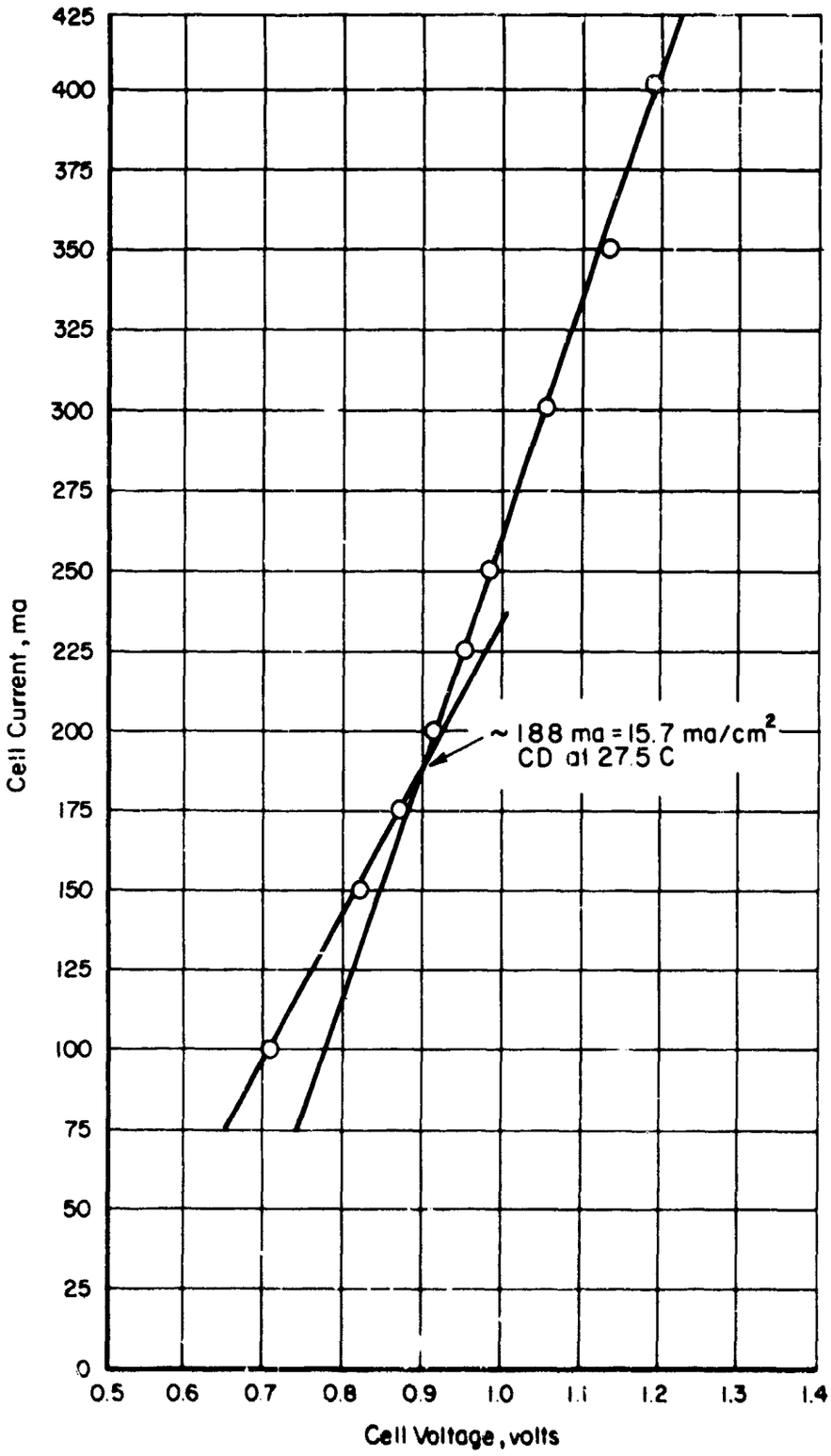

FIGURE 4. DETERMINATION OF ANODIC MECD AT ONE TEMPERATURE VALUE

Legend for Figures 5 and 6

Conditions

(Unless otherwise indicated, a 6.5-mm OD x 0.13 mm-wall Pd-25Ag tube was used in the experiments.)

(1) Rhodium pretreatment CP-1; 40% NaOH electrolyte (ref 4).

(2) Mechanical cleaning treatment CC-1 plus platinum-black pretreatment CP-2; 50% NaOH electrolyte (Run C).

(3) Cleaning treatment CC-1 plus platinum-black pretreatment CP-2 and ruthenium/asbestos catalyst pretreatment CP-6, 50% NaOH electrolyte (Run D).

(4) Cleaning treatment CC-1 plus ruthenium/asbestos catalyst pretreatment CP-6; 50% NaOH electrolyte (Run B).

(5) Anodic activation with HCl solution treatment CA-2; 60% NaOH electrolyte (ref 3).

(6) Vacuum annealing activation treatment CA-3; 1.3-mm OD x 0.07-mm wall Pd-25Ag tube; 60% NaOH electrolyte (ref 3).

(7) Cleaning treatment CC-1; 50% NaOH electrolyte (Run A).

(8) Cathode activation treatment CA-1; 60% NaOH electrolyte (ref 3., same as control cathode used in reliability evaluation run discussed in Section II).

(9) Same as (1) with ruthenium/asbestos catalyst added, pretreatment CP-6 (ref 4).

(10) Cleaning treatment CC-1 plus ruthenium/asbestos catalyst pretreatment CP-6 (value obtained in work shown in Table II).

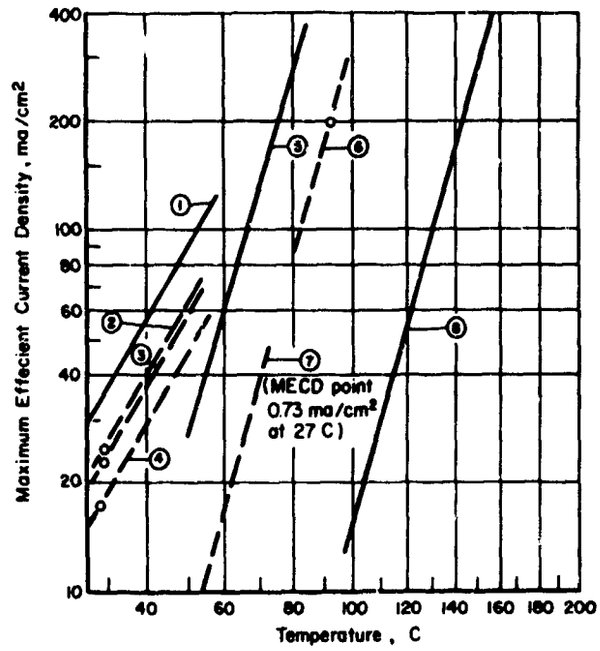

FIGURE 5. INFLUENCE OF SURFACE TREATMENTS ON THE CATHODIC MECD

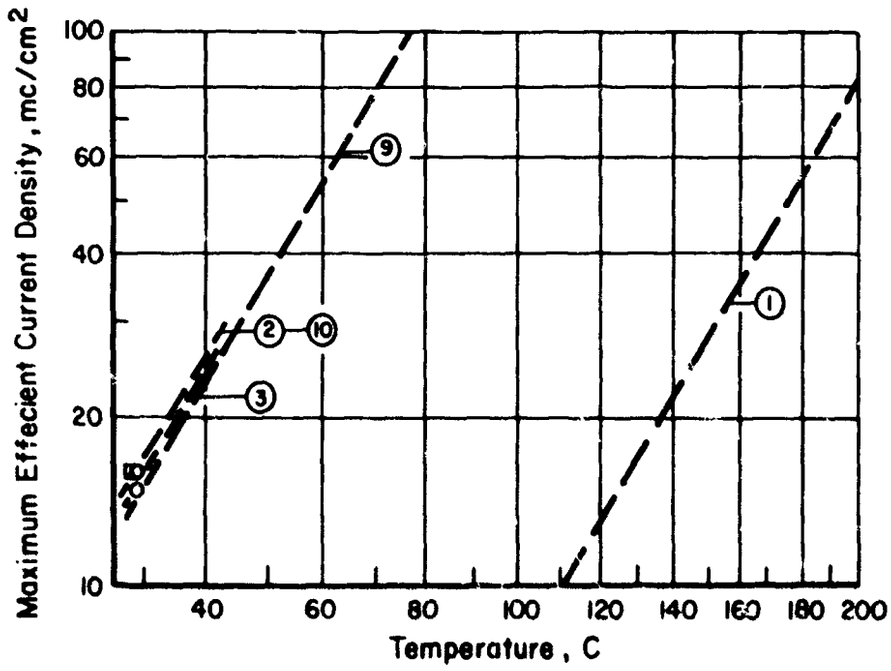

FIGURE 6. INFLUENCE OF SURFACE TREATMENTS ON THE ANODIC MECD

Run B. The inside of the tube (gas-phase side) was loosely packed with 10 wt % ruthenium on asbestos catalyst (pretreatment CP-6) and a cathodic MECD value was determined.

Run C. The ruthenium/asbestos catalys was removed after which, the inside surface was flushed with distilled water and platinized by procedure CP-2. Both cathodic and anodic MECD rate constants were then determined for the platinum-black catalyst.

Run D. The inside of the tube was again packed with ruthenium/asbestos catalyst and MECD rate constants were determined for cathodic and anodic hydrogen diffusion.

In all of the above runs the experimentally determined MECD values were verified in minimum 30-minute runs. That is, essentially 100 percent hydrogen diffusion efficiency was measured in runs made at the same conditions characterized by the MECD.

Experimental Results and Discussion

The extrapolated MECD values obtained in the runs are shown in curves 2, 3, 4, and 7 of Figure 5 (cathodic diffusion rate constants), and curves 2 and 3 of Figure 6 (anodic diffusion rate constants). For comparison purposes, results of prior experimental work (ref 3) performed at Battelle-Columbus are also included in the figures. In making the comparison, the energies of activation of the ruthenium/asbestos and platinum-black catalysts were assumed to be essentially the same as that exhibited by the rhodium pretreatment (e.g., slope of curve 1 of Figure 5). The differences in electrolyte concentration was shown not to be a major factor in prior work (ref 3).

The preferred electrode treatment procedure selected for use in the program was cathode cleaning treatment CC-1 followed by vacuum annealing treatment CA-3 and platinum-black application to the gas-phase side, pretreatment CP-2. In prior work (ref 3) the vacuum annealing resulted in a small but definitive increase in rate constant and was considered to be an excellent surface-cleaning treatment. Mechanical cleaning (treatment CC-1) prior to vacuum annealing was performed to remove any high-temperature extrusion lubricant that may have been present on the inside surfaces of the as-received tubes.

CATHODE OVERVOLTAGE STUDY

The purpose of the following work was to identify the relative contribution of cathode overvoltages to the cell voltage and to investigate the effect of gas-phase depolarization with catalyst and reactor gas, e.g., oxygen in air.

Description of Experimental Work

The work was carried out in a free-electrolyte cell (Figure 11). A new Pd-25Ag tube given cleaning treatment CC-1 and activation treatment CA-3 (vacuum-annealing) was used in the experiment. In the experimental procedure, the effects on voltages (Δ E cell) of gas-phase depolarization with catalyst and air were investigated in 12 runs (A through L) shown in Table III. All runs were performed using the same palladium-silver cathode, and in the order shown. The steady-state cell voltage of Run A, I, and K served as a base line for noting the influence on cell voltage (Δ E cell) of subsequent variables investigated. All of the cell voltages indicated in Table III are steady-state voltages as determined by a minimum 30-minute period of operation at essentially 100 percent H_2-transmission.

TABLE III. SUMMARY OF CATHODE OVERVOLTAGE STUDY

Run	Variable Investigated	Cell Voltage, v	Influence, Δ E cell
A	Vacuum-annealed tube at standardized electrolysis conditions[a]	2.02	Baseline
B	Platinum-black catalyst on the diffusion side[b]	1.92	100-mv decrease
C	Air flow: 40 to 300 cc/min (N = 2 to 15)	1.87	50-mv decrease
D	Same as Run B, air flow turned off	1.87 → 1.92	100-mv decrease
E	Catalyst quantity and quality: packed inside tube with 40-mesh NiO (Harshaw Ni-0104), air flow 60 cc/min (N = 2.5)	1.87	None
F	Catalyst quantity and quality: packed inside tube with asbestos-10 palladium, air flow 60 cc/min	1.87	None
G	Catalyst quantity and quality: packed inside tube with asbestos-3 ruthenium, air flow 60 cc/min	1.87	None
H	O_2 partial pressure: applied 5 psig air pressure, air flow 40 cc/min	1.87	None
I	Temperature: increased electrolyte temperature to 90 C, no air flow	1.88	Baseline
J	Temperature with air flow: 90 C, air flow 40 cc/min (N = 2)	1.81	40-mv decrease
K	Current density: increased 60 to 200 ma/cm^2, temperature 90 C, no air flow	2.14	Baseline
L	Current density with air flow: 200 ma/cm^2, temperature 90 C, air flow 200 cc/min (N = 2)	2.09	50-mv decrease
M	Lowest possible cell voltage obtainable at 37 ma/cm^2 CD and 80 C: the cathode tube was anodically discharged of hydrogen, voltage shown is the initial cell voltage while charging	1.55	470-mv decrease

(a) Conditions used in all tests unless otherwise noted: 30% NaOH electrolyte at 80 C, 37 ma/cm^2 cathode current density, and atmospheric pressure.
(b) Treatment CP-2.

The cathode overvoltages caused by absorption of hydrogen were investigated in run M. In the study, the cathode tube was anodically discharged of hydrogen after which the tube was made cathode at 37 ma/cm^2 constant current density. Ambient air was in the tube during this operation. An initial cell voltage of 1.55 volts was obtained which reflects the operational voltage of the cell if no further hydrogen overvoltages were incurred due to absorption and diffusion. Subsequent cell voltages versus time were

recorded and the data are shown graphically in Figure 7. In obtaining the curve, gas-phase diffusion was first noted in the area represented by the plateau at about 24 minutes and measured 98 percent 16 minutes later prior to termination of the test. The atomic ratio (H/M) shown for the first 22 minutes of operation is a rough estimate that is based on the weight of a 7.6 cm length of tube (one end closed) and the 0.560 ampere charge rate. For comparative purposes, the steady-state cell voltage of runs A, B, and C of Table III are included in the figure.

Experimental Results and Discussion

Results of the investigation showed that for the conditions of run A, cathode overvoltage contributed 470 mv to the steady-state cell voltage of 2.02 volts. Platinizing the gas-phase side of the cathode reduced the cathode overvoltage value by 100 mv and flowing air over the platinized surface resulted in an additional reduction of 50 mv. No further reduction was obtained:

By varying the air flow rate from N = 2 to N = 15 (where N is the stoichiometric quantity of oxygen contained in air to react with diffused hydrogen, run C);

increasing the catalyst quantity by packing the inside of the tube with nickel-oxide, palladium/asbestos, or ruthenium/asbestos catalysts (runs E, F, and G); or

increasing the oxygen partial pressure by applying 5 psig pressure on the diffusion side (run H).

Also, the 50 mv cathode depolarization value obtained by flowing air over the platinized surface (run C) was not affected by a 10 degree centigrade increase in temperature (run I versus J), and a 163 ma/cm^2 increase in current density (run K versus L).

The results indicate that the relatively high 320 mv minimum overvoltage obtained in the investigation (e.g., run C of Figure 7) is due to dissolved hydrogen that is firmly bound in the interior of the palladium-silver cathode. Temperature was expected to have a significant influence on its related voltage due to the effect on the H/M ratio. However, for any given condition, a reactor gas (e.g., carbon dioxide in the Sabatier reaction) was not expected to appreciably reduce its contribution to the cell voltage.

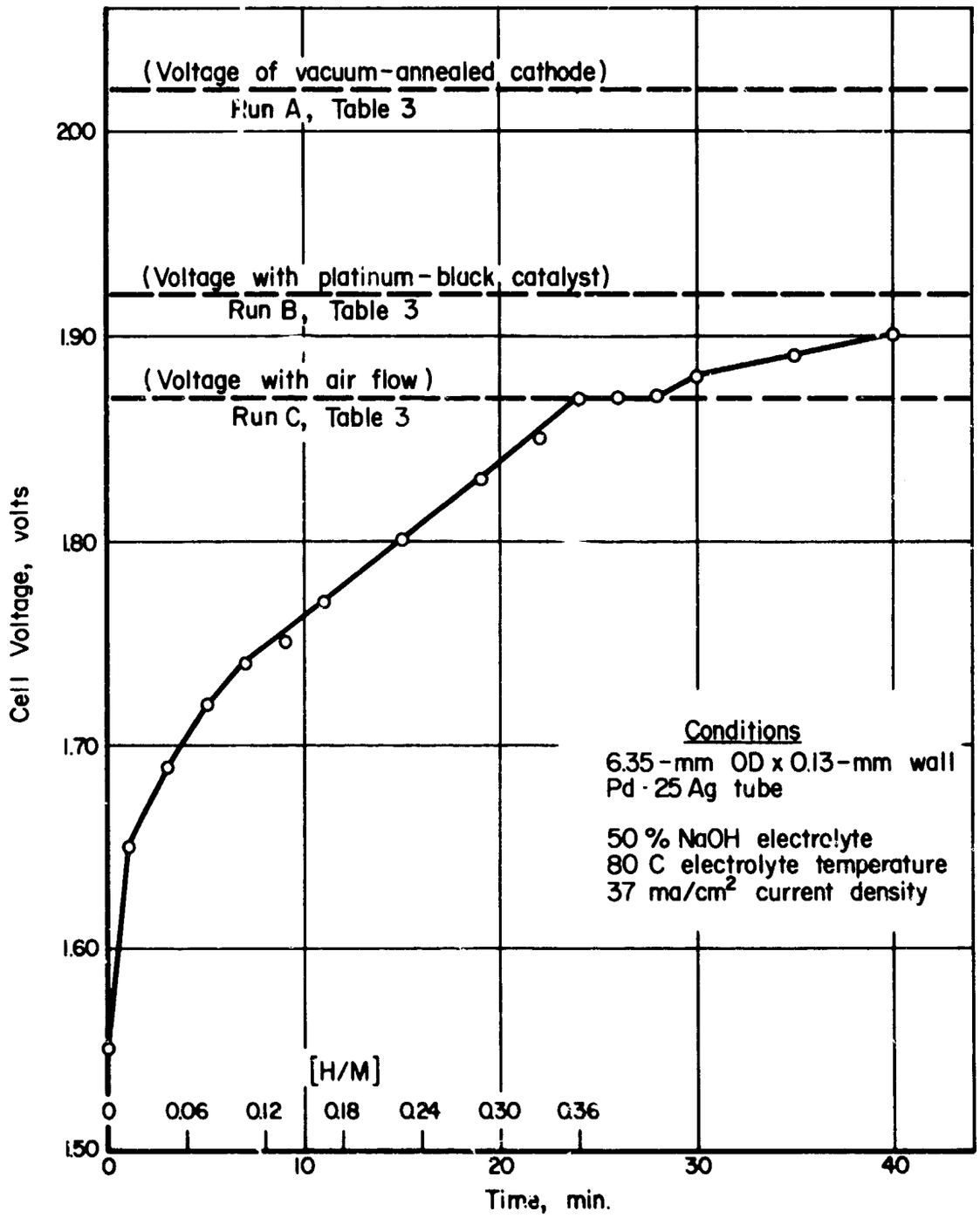

FIGURE 7. HYDROGEN ABSORPTION AND DIFFUSION EFFECTS ON CELL VOLTAGE

SECTION V

EXPLORATORY EVALUATION OF MATRIX MATERIALS AND CELL FABRICATION TECHNIQUES

SCOPE OF INVESTIGATION

The primary objective of Phase I of the program was a matrix for use with a Pd-25Ag cathode that would permit satisfactory operation at high temperature. The goal established at the beginning of the program was 200 hours of operation on water-vapor feed at a cell temperature 200 C. Satisfactory operation was defined as essentially 100 percent hydrogen transmission, 95 percent H_2-transmission minimum acceptable. Obviously, any matrix that satisfied the Phase I goal would be suitable for lower temperature operation (i.e., down to 50-70 C). A secondary objective (Phase II of the program) was a matrix representing an improvement over prior work in the event that the Phase I goal was not attainable.

Two important criteria of a satisfactory matrix are:

- Long-term stability in hot caustic so as not to contaminate the electrolyte and consequently poison the electrolyte side of the Pd-25Ag cathode.
- Ability to immobilize and to retain the electrolyte by capillary forces while permitting electrolysis with water-vapor feed without excessive polarization.

The first criterion can be evaluated most definitely in a free-electrolyte apparatus. The second criterion requires fabrication of an experimental cell for demonstration of operation with water-vapor feed.

Preliminary Matrix Screening Study

Concurrently with a matrix materials evaluation program, which is discussed later in this section, a study of matrix materials in a separate free-electrolyte screening test was initiated to define the contamination problem. In particular, we wanted to distinguish between matrix materials that result in continual electrolyte contamination (i.e., matrix degradation) and limited initial contamination (i.e., contamination physically associated with matrix). This was accomplished by comparing the results of tests in terms of the initial hours to failure (less than 95 percent H_2 transmission) to subsequent hours to failure after the surface of the cathode was cleaned so as to attain satisfactory H_2-transmission again.

Description of Apparatus and Experiments

The experiments were performed in small-volume cells (40 ml) of the electrolysis unit shown in Figure 8. Pd-25Ag tubes, 1.6-mm OD x 0.076-mm wall, having an effective area of 3.83-cm^2 (7.6-cm length) were used for cathodes. The tubes, closed at one end, were given cleaning treatment CC-1, activation treatment CA-3, and catalyst pretreatment CP-2 of Section IV. After treating five cathodes, one tube was installed in each of the five cells labelled 1 through 5, respectively. Matrix materials for study were then added (200 mg) to the cells that contined preelectrolyzed 50 percent NaOH electrolyte at 50 C. The electrolyte was formulated from Baker's CP pellets of lot number 32217 using treatment ET-1. Cell labelled No. 5 was used as the control cell, thus no material was added to this cell. The other four cells contained: fuel-cell asbestos (Type SL-15 Johns-Manville), boron nitride fiber and powder (Carborundum Co.), and 0.5-3 micron diamond powder (Elgin Watch Co.), respectively. The cells were electrically connected in series and operated at 56.5 ma which is equivalent to a cathode current density of 37 ma/cm^2.

Experimental Results and Discussion

The small-volume screening study was terminated after 1300 hours of operation. A summary of the results is shown in Figure 9. The mode of failure for the materials investigated is described below.

Fuel-Cell Asbestos

The fuel-cell asbestos was completely disintegrated, and after an initial 200 hours of satisfactory performance, succeedingly lesser hours to failure were obtained (150 hours and 5 hours, respectively) after the cathode was cleaned twice.

Boron Nitrides

Both the boron nitride fiber and powder were almost completely dissolved in the electrolyte at the end of the experiment. As can be seen in Figure 9, the mode of failures were similar to the asbestos material. Satisfactory H_2-transmission was being obtained in the test with boron nitride powder after 400 hours (after the cathode was cleaned once) when the experiment was terminated. However, the material was on the verge of causing failure as evident by a borderline 95 percent H_2-transmission being obtained.

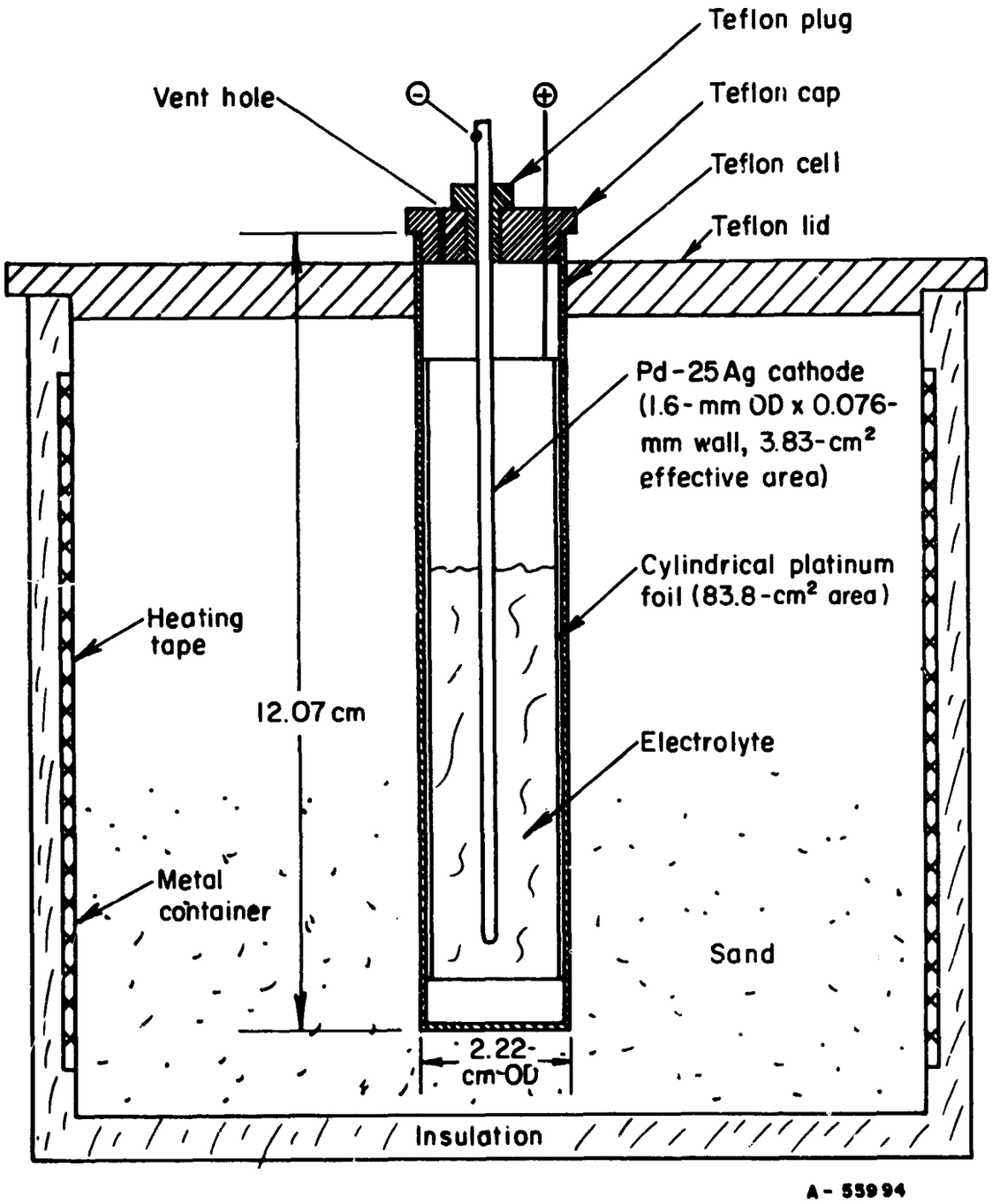

FIGURE 8. SMALL-VOLUME FREE-ELECTROLYTE UNIT, SHOWING ONE OF FIVE CELLS IN THE UNIT

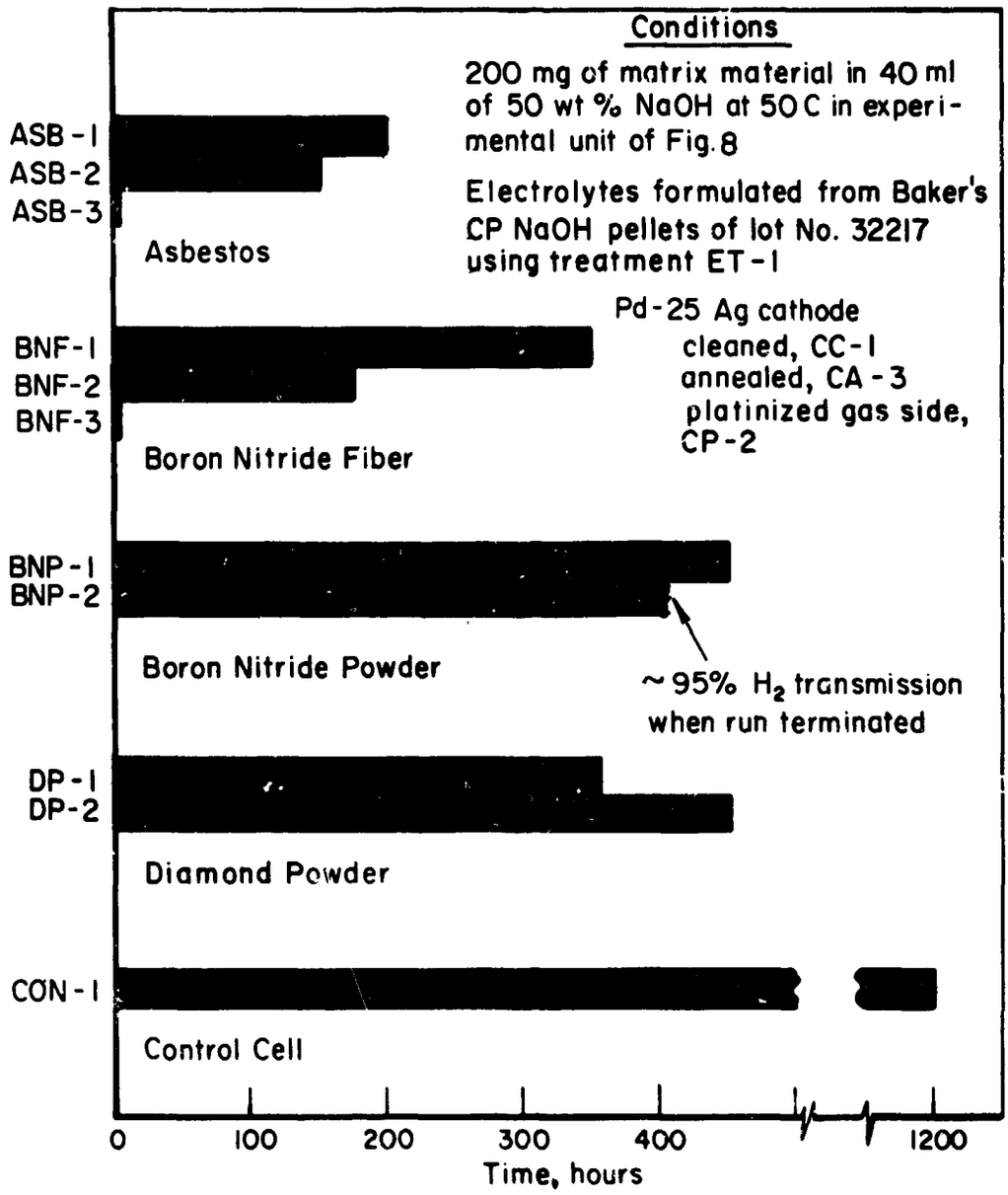

(> 95% H transmission starting with clean Pd - 25 Ag cathode)

FIGURE 9. RESULTS OF MATRIX SCREENING STUDY

Diamond Powder

The results of the diamond powder experiment, as can be seen in Figure 9, were uniquely different. After the cathode was cleaned once, satisfactory H_2-transmission was extended from 350 to 450 hours. The achievement of better performance with increased exposure time of the diamond material indicated three significant results: (1) matrix degradation was not a problem; (2) the failures resulted from contaminate(s) which was physically associated with the material; and (3) the contaminate(s) responsible for the failures could be leached and plated-out in sodium hydroxide solution.

The latter result promoted the development of a diamond purification technique which is discussed below.

PREELECTROLYSIS TREATMENT OF MATERIALS

In addition to the diamond contamination problem, harmful contaminates were also experimentally found to be associated with sintered platinum powder anodes (discussed later in this section). Successful procedures developed for their purification are described below.

As-Received Diamond

- No more than 20 carats of diamond were added to 25 wt % sodium hydroxide leaching solution in the cell shown in Figure 10.
- The solution was electrolyzed at 330 ma/cm^2 for 90 hours at 50 C after which the current density was lowered to 65 ma/cm^2, and electrolysis was continued for an additional 72-hour period at the same temperature.

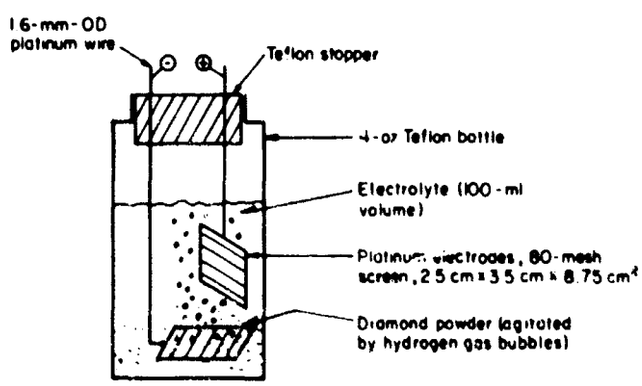

FIGURE 10. ELECTROLYSIS CELL FOR PURIFYING DIAMOND POWDER

Sintered Platinum Powder Anodes

- Porous anodes were soaked in 37 vol % hydrochloric acid solution at 24-26 C for 72 hours.
- After soaking, the anodes were flushed with tap water (23-24 C) for 24 hours, blotted dry with hand tissues, and distilled water rinsed.
- The anodes were then preelectrolyzed (anode anodic) in 50 percent sodium hydroxide solution at 50 C and at 90 ma/cm^2 for 14 hours.

DESCRIPTION OF MATRIX EVALUATION EXPERIMENTS AND RESULTS

A list of the experiments performed in this phase of the program is chronologically shown in Table IV. Run numbers followed by the letter F indicates that the experiment was performed in the free-electrolyte unit shown in Figure 11. Whereas runs performed in the vapor-feed unit, shown in Figure 12, are followed by the letter V. In all of the experiments, unless otherwise indicated in a brief description of the runs that follow, a new Pd-25Ag cathode tube, 6.35-mm OD x 0.13-mm wall thickness, was used in constructing the various cells used in the experiments. Procedures which were developed to activate and/or pretreat the surfaces of the cathode are discussed in Section IV. Prior to fabrication, each cathode was studied in free electrolyte. The criterion used in selection of cathode was satisfactory H_2-transmission for a minimum 1-hour period.

The matrix of cells of experiments that were evaluated in the static vapor-feed unit were impregnated by soaking the cell in free electrolyte at the desired concentration used in the run and at 125-130 C for a 1-hour period. After a run was terminated, and the cell disassembled, the cathode tube was checked at the same conditions. If less than essentially 100 percent H_2-transmission was obtained in the test it was assumed that the cathode was poisoned.

ZIRCONIA CLOTH (RUN 13V)

A 30-mil-thick zirconia cloth matrix was evaluated at 200 C under vapor-feed condition in run 13V. The cell was fabricated using an 80-mesh platinum screen anode and 4-cm active length of a Pd-25Ag cathode tube.

In a 31-hour evaluation, satisfactory H_2-transmission was obtained for the first 12 hours of operation. Thereafter, the H_2-transmission

TABLE IV. SUMMARY OF MATRIX MATERIAL EVALUATION

Experiment	Anode Material	Anode Thickness, mm	Matrix[a] Material	Matrix[a] Thickness, mm	Cathode Treatments[b]
1F	Platinum screen, 100-mesh, rolled	0.09	Diamond, 180-250 μ	0.88	CC-1, CA-3, CP-2
2F	Ditto	0.09	Ditto	1.1	Ditto
3F	"	0.09	"	1.1	"
4F	Platinum screen, 80-mesh	0.25	Diamond, 250-420 μ	1.5	"
4V	Cell of Experiment 4F in vapor-phase testing				
5F	Spiraled platinum wire	0.5	Diamond/Teflon	0.09	"
5V	Cell of Experiment 5F in vapor-phase testing				
6V	Platinum screen, 80-mesh	0.25	Boron nitride powder, 45-350 μ, 75% porosity	1.5	"
7V	Sintered platinum powder plaque	0.25	Diamond, 0.5-3 μ	0.075	"
8V	Sintered platinum powder cylinder	0.25	Ditto	0.075	"
9V	Ditto	0.25	Diamond, 150-180 μ	0.31	"
10V	"	0.25	Diamond, 0.5-3 μ	0.31	CC-1, CA-3
11V	"	0.25	Diamond, 150-180 μ	0.31	Ditto
12V	"	0.25	Ditto	0.50	"
13V	Platinum screen, 80-mesh	0.25	Zirconia cloth[a]	0.75	CC-1, CA-3, CP-2
14V	Sintered platinum powder cylinder	0.25	Diamond, 150-180 μ	0.50	CC-1, CA-3/CP-2
15V	Platinum screen 80-mesh	0.25	Diamond, 250-420 μ	1.5	CC-1, CA-3, CP-4

(a) Matrices:
Diamond Products Division, Elgin National Watch Co., Elgin, Illinois
Boron Nitride Type H.P.C., Carborundum Corp., Latrobe, Pennsylvania
Zirconia Cloth, Union Carbide Corp., Tuxedo, New York.

(b) Cathode treatments are discussed in Section IV.

(c) H_2-transmission efficiency higher than 95%.

(d) Experiment in free-electrolyte cell.

(e) Electrolyte formulated from Baker's "carbonate-free" CP pellets (lot No. 37716) and treatment ET-4; Baker's reagent grade CP pellets (lot No. 32217) and treatment ET-1 were used in all other runs.

Conditions								
Electrolyte Concentration, weight percent	Cathode Area, cm^2	Cathode Current Density, ma/cm^2	Cell Voltage, volts	Temperature, C: Cell	Temperature, C: Vapor Generator	Evaluation Time, hours: Total	Evaluation Time, hours: Acceptable Hydrogen Transmission[c]	Suspected Cause of Failure
50	5	20	3.0	30	(d)	0.33	None	Cell short-circuited
50	5	20	3.1	30	(d)	0.5	None	Ditto
50	5	20	3.15	30	(d)	2.0	None	"
50	13	37	2.31/ 1.78	70/ 130	(d)	975/2352	510/1095	No failure
50		37	2.15	130	90	2.5	None	Deficiency in capillary pores
50	15.2	37	2.23	130	(d)	0.66	0.66	No failure
50		23	9.01	130	54	1.3	None	Cell short-circuited
50	13	37	1.90	130	97	117	28	Mechanical failure
50	10	37	1.57	130	80	0.17	None	Cell short-circuited
50	10	37	1.59	130	79	0.8	None	Ditto
50	10	37	1.76	130	88	19.0	None	Cathode poisoned
60	7.6	37	1.90	130	65	8.0	1.0	Ditto
60→80	7.6	37	1.63→ 1.57	130→ 200	88	237	9.5	Cell short-circuited
75	10	32→120	1.50→ 1.65	200→ 230	94	17.5	None	Cathode poisoned
80 (e)	10	37	1.58	200	77	31	25	Ditto
80 (e)	7.6	37	1.55	200	94	5.6	0.2	Cell short-circuited
80 (e)	7.6	37→148	1.53→ 1.68	210	80→97	2728	2728	No failure

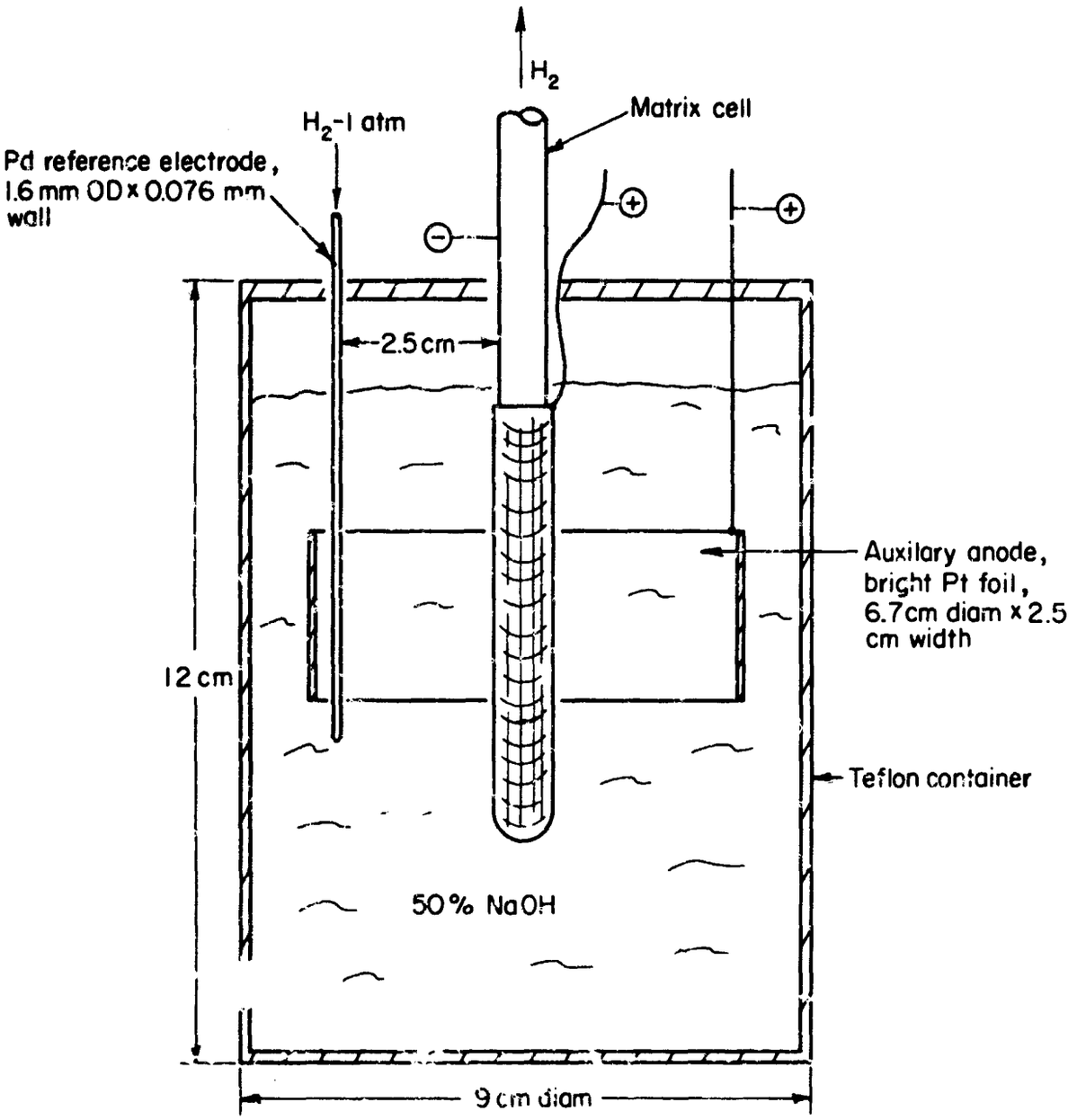

FIGURE 11 FREE-ELECTROLYTE EXPERIMENTAL UNIT

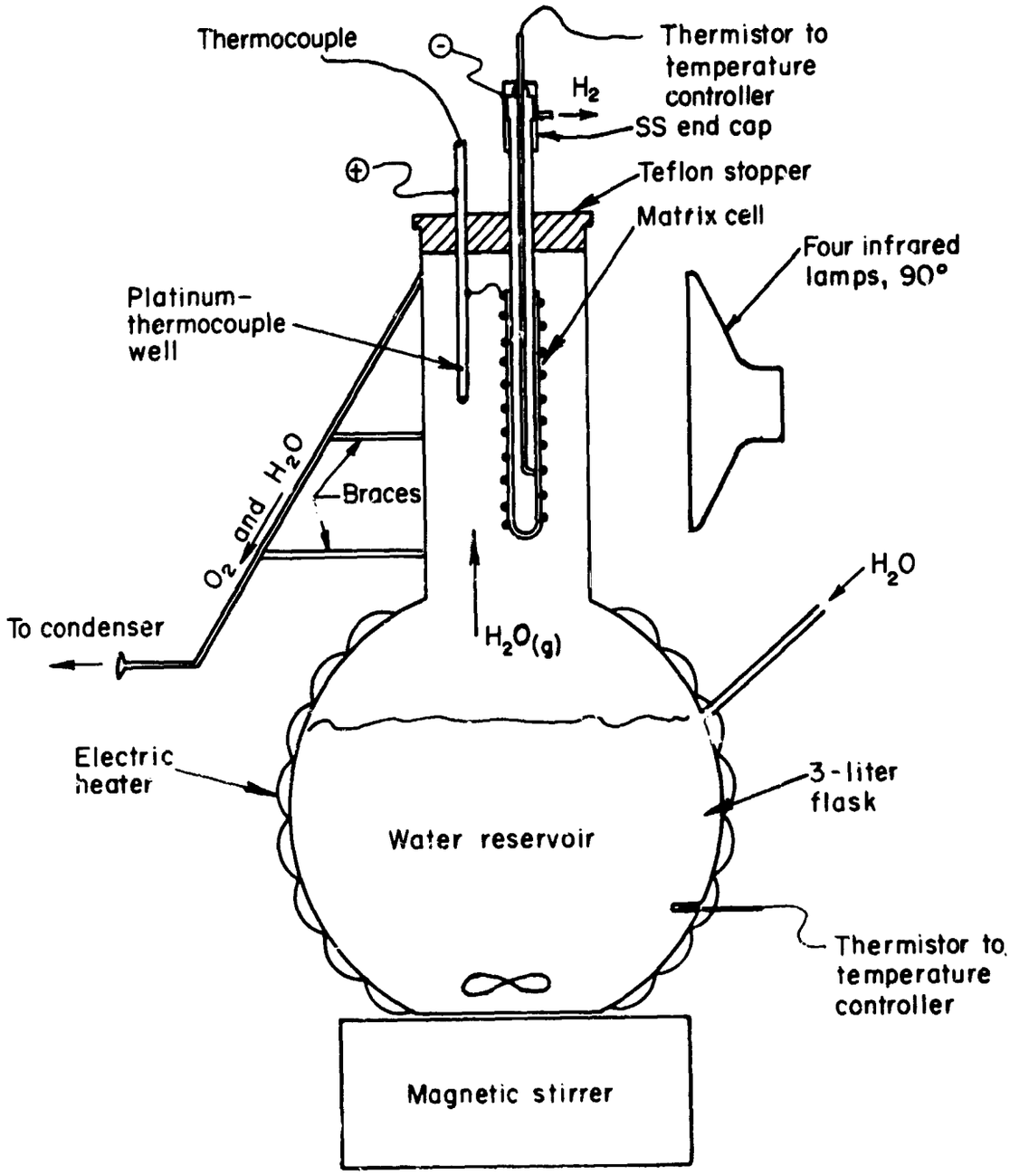

FIGURE 12. STATIC VAPOR-FEED EXPERIMENTAL UNIT

gradually decreased to about 91 percent after 22 hours, and 89 percent when the run was terminated. An evaluation of the cathode in free electrolyte after termination of the run indicated that the surface of the cathode was poisoned.

BORON NITRIDE POWDER (RUN 6V)

Pure boron nitride powder was evaluated under static vapor-fed conditions in run 6V. Since heretofore successful operation was not achieved in vapor-phase evaluations, one objective of the experiment was an extended operation of at least 24 continuous hours to show feasibility of operating matrix-type cells on a static vapor-fed system. Another objective was a contamination evaluation of the boron nitride.

The matrix cell used in the evaluation was fabricated by loosely packing the annular space of Cell A (Figure 13) with a boron nitride powder which contained a 75 percent pore volume and 45 to 325-mesh particle size.

Initially, satisfactory H_2-transmission was obtained for about 26 continuous hours. After this period, however, the relay switch operating the infrared lights failed. The failure resulted in cell flooding and a considerable amount of boron powder was lost.

Following the relay failure, the matrix was reimpregnated and returned to study at the same conditions. However, continuous satisfactory H_2-transmission was not again achieved. The problem appeared to be due to an imbalance in vapor pressure, i.e., matrix too dry, and perhaps an insufficient quantity of matrix remaining after flooding. The run was finally terminated after 117 hours of operating after the cell polarized to about 6 volts. The corresponding hydrogen efficiency yield was about 29 percent. After termination of the run, the cathode tube was evaluated for contamination and satisfactory results were obtained in 50 percent NaOH free electrolyte at 130 C and 37 ma/cm^2 CD for a 1-hour period.

WETTABLE MICROPOROUS TEFLON DIAMOND POWDER

Preparation of Matrix

A wettable Teflon matrix was made from porous Teflon material and diamond powder in the 1/2-3-micron range. Wettability was accomplished by wetting a piece of Teflon on a glass plate with acetone. After wetting, dry diamond powder was sprinkled over the surface to form a thick paste which was lightly spread over the surface with a Teflon spatula. As required, acetone was added dropwise to the powder while spreading, until a

uniform diamond coating was obtained. The Teflon matrix was then turned over and the same procedure was applied to the other side. After drying, the matrix was readily wetted with distilled water. The porous Teflon material was coarse grade, 0.09 mm thick, < 20 micron pore size, and contained 66 percent mean pore volume.

Free-Electrolyte Evaluation (Run 5F)

A matrix-type cell was fabricated using the above Teflon-diamond material and a piece of 0.5-mm-diameter platinum wire, 30 cm long. One layer of the matrix was wrapped around a 7.65-cm length of the tube, after which the platinum wire was spiraled around the matrix length to form the anode. It was necessary to wet the matrix with distilled water in order to hold it in place while applying the anode.

After fabrication, the cell was evaluated in free electrolyte in run 5F. Essentially 100 percent H_2-transmission was obtained for a 40-minute period at 2.23 v cell voltage.

Following the successful operational period in free electrolyte, the cell was transferred to the static vapor-fed unit for continued evaluation in the vapor-phase.

Vapor-Feed Evaluation (Run 5V)

The vapor-phase evaluation of the Teflon/diamond matrix cell was terminated after an 80-minute period due to electrical shorting. The desired conditions of 37 ma/cm^2 CD, 130 C cell temperature, and about 2.2 v cell voltage were not achieved in the run. The run was initiated at a cell temperature of 130 C and vapor generator temperature of 24 C, i.e., cell polarization conditions. The vapor generator temperature (vapor-feed partial pressure) was gradually increased and when shorting occurred, 350 ma (23.2 ma/cm^2 CD) was obtained at a cell voltage of 9.0 volts with a vapor generator temperature of 54 C. Initial conditions, 5 minutes after starting the tests were 20 ma (0.13 ma/cm^2 CD) at 10.26 volts with a vapor generator temperature of 27 C. Electrolyte equilibrium vapor pressure for the desired condition was about 470-mm mercury (equivalent to a vapor generator temperature of about 86 C).

Significantly, at the former conditions it was noted that although the matrix, in general, was dry throughout, principally, electrolysis appeared to be taking place at the bottom of the cell. The observation indicated that a temperature gradient existed along the cell. This was subsequently checked after terminating the run and an 8 degree centigrade differential was recorded from the top of the cell to the bottom (bottom portion cooler).

The infrared lamps shown in Figure 12 were consequently rearranged and two additional lamps were added to the unit, which decreased the temperature differential to about 1.5 C.

DIAMOND POWDER MATRIX WITH WRAPPED PLATINUM SCREEN ANODES

Experimental Run 1F

The same palladium-silver cathode and platinum anode screens were used in fabricating the cells of runs 1F, 2F, and 3F (first three exploratory runs conducted in this phase of the program). The platinum screen was rolled to reduce the size of the openings so that the screen would support the 180- to 250-micron particle size of the diamond. In fabricating the cell of run 1F, after taping of the desired electrolysis area with Teflon tape, the anode screen was rolled around the cathode tube while pouring a layer of dry diamond particles in between. The estimated thickness of the diamond layer was about 0.88 mm. After fabrication, a visual inspection revealed that the diamond layer was discontinuous and contained many void areas about 1 to 2 mm in diameter. In the run, electrolysis was terminated after about a 20-minute period when a short circuit developed. Cell voltage during the experiment varied from 2.97 volts (start) to about 3.05 volts prior to shorting. After the short circuit occurred, the cell voltage dropped to about 87 mv.

Experimental Run 2F

The cell of run 2F was fabricated using the same technique as outlined above except the diamond particles were wetted with distilled water. The wetting made the diamond easier to apply so that a much better matrix was fabricated, having better uniformity and less void areas although a few holes were still evident. The matrix thickness was about 1.1 mm. In subsequent evaluation, a short circuit developed after about 30 minutes of electrolysis. Cell voltage prior to shorting measured about 3.1 volts. Since satisfactory performance appeared to be extended by fabricating a matrix having less void areas, a third attempt was made (run 3F) to apply a more continuous diamond layer around the cathode.

Experimental Run 3F

In fabricating the cell of run 3F the anode screen was first applied around the cathode tube, after which the bottom edge was taped with Teflon tape. Dry diamond particles were then poured into the area between the tube and screen while tapping the tube. After filling the void area, the top edge of the screen was taped and a platinum anode lead was attached to the screen. This technique resulted in obtaining a matrix that was continuous and no void area could be detected when visually inspected with a flashlight.

In subsequent evaluation, except for an unusually high cell voltage (3.15 volts, 3.0 volts initially), the cell performed satisfactorily for about 2 hours after which time a short circuit developed causing termination of the run. Hydrogen gas (collected over dibutyl phthalate) began to appear about 10 minutes prior to shorting. A visual inspection of the matrix made after the run revealed no apparent defect that would contribute to a short circuit, i.e., no void areas in the matrix were noted. However, it appeared that the diamond particles were not being held too rigidly against the cathode tube, and possibly shorting may have resulted from a shift in some particles during electrolysis.

The problems incurred in the preliminary experimental runs of 1F, 2F, and 3F stress the need for a continuous dense layer of diamond, firmly held in place prior to applying the anode screen; or conversely, a rigid porous anode that would not flex during electrolysis.

DIAMOND POWDER WITH PREFORMED PLATINUM SCREEN ANODE

Free-Electrolyte Evaluation (Run 4F)

To avoid the electrical short circuit encountered in prior experiments, the diamond matrix cell used in run 4F was constructed with a relatively thick matrix (1.5 mm) and a rigid platinum anode. A schematic sketch illustrating the type of construction used in fabricating the cell is shown in Figure 13. The rigid anode was made with a cylinder of platinum screen of 80-mesh, 3-mil wire supported on the inside diameter with a platinum screen of 8-mesh, 20-mil wire.

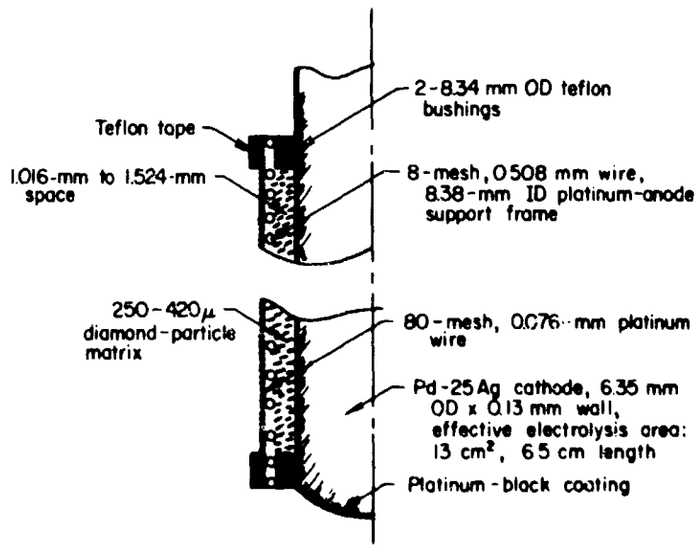

FIGURE 13. EXPERIMENTAL MATRIX CELL A

A summary of the experimental run which was conducted in free electrolyte for 2352 hours is shown in Table V. The cell performed satisfactorily for about 511 continuous hours at the conditions 50 percent NaOH electrolyte at 70 C and 37 ma/cm^2 CD. After 678 hours of operation, the H_2-transmission was noted to have dropped to about 85.5 percent, and to 82 percent after about 960 hours. During the next 120 hours, the operation of the cell was periodically interrupted to obtain voltage analysis data which are shown in Table VI. After completing the voltage analysis studies, the electrolyte temperature was increased from the 70 C to 130 C. Thereafter, essentially 100 percent H_2-transmission was obtained for about the next 1000 hours.

TABLE V. FREE ELECTROLYTE EXTENDED OPERATIONAL RUN OF A DIAMOND MATRIX CELL (RUN 4F)[a]

Operational Hours	Hydrogen Collection, percent	Voltages, volts[b]			Temperature, C	Remarks
		Cell	Cathode	Anode		
0	--	2.14	--	--	55	Initiate run, 500 ma.
1	80.6	2.44	--	--	55	
2	101.2	2.48	--	--	55	
3	98.7	2.43	--	--	56	
72	99.0	2.38	--	--	62	
128	98.7	2.30	--	--	69	
175	100.0	2.30	--	--	69	
223	101	2.28	--	--	71	
264	100	2.30	--	--	69	
312	100	2.31	0.38	1.93	69	
436	98.7	2.31	0.38	1.93	70	
511	100	2.18	0.35	1.83	83	Temperature inadvertently increased, lowered emperature.
678	85.5	2.17	0.32	1.85	77	
960	82	2.20	0.31	1.89	74	Operation of cell periodically interrupted from 960- to 1085- operational hour period in order to obtain voltage analysis data shown in Table VI.
1,013	94.8	1.78	0.20	1.58	74	
1,085	92.2	2.09	0.21	1.87	73	
1,349	100	1.78	0.06	1.72	130	
1,515	100	1.79	0.07	1.73	129	
1,781	100	1.76	--	--	132	
2,021	99.6	1.82	0.08	--	124	
2,352	98.7	1.81	--	--	122	Transferred to static vapor-fed cell.

(a) Electrolysis conditions: 500 ma constant current, nominal 37 ma/cm^2 CD.

(b) Electrode potentials measured with a 1.600-mm O.D. by 0.076-mm-thick wall pure palladium tube in the same electrolyte with pure, dry hydrogen flowing through the tube at atmospheric pressure. Potentials are not corrected for IR losses.

TABLE VI. VOLTAGE ANALYSIS DATA OF DIAMOND MATRIX CELL OF RUN 4F

Potentials Based on Cathode Current Density, volts[a].

Current, amp	CD, ma/cm^2	Foil Anode			Screen Anode			
		Cell	Cathode	Anode	Cell	Cathode	Anode	Cathode[b]
0.50	37	2.234	0.378	1.790	2.165	0.353	1.827	0.329
1.30	100	2.512	0.597	1.860	2.412	0.530	1.899	0.501
0.13	10	1.995	0.201	1.743	1.934	0.191	1.759	0.158
0.013	1	1.720	0.055	1.640	1.660	0.044	1.650	0.034
0.50	37	2.195	0.378	1.805	2.170	0.356	1.830	--

(a) Conditions: Diamond-matrix cell of Experiment 4F; 50 percent NaOH electrolyte at 74 C and atmospheric pressure; reference electrode, Pd/H_2 (1 atm).

(b) Steady-state potentials.

For the applied conditions the result obtained was a milestone for matrix-type cells. The results indicated that diamond particles do not adversely affect diffusion performance of a Pd-25Ag athode. It was expected that satisfactory performance could have been achieved at the desired 180-200 C temperature range. Since the cell was run in free electrolyte, however, the vapor absorption characteristics of the diamond matrix could not be determined. Therefore, after the above operational period, the cell was transferred to the static vapor-fed unit for continued operation and evaluation of the diamond matrix under vapor-fed conditions.

Vapor-Feed Evaluation (Run 4V)

Experiment 4V was the vapor-phase evaluation of the diamond matrix cell which was evaluated in free-electrolyte in run 4F. For the experiment, it was desired to maintain essentially the same conditions that were maintained in the former run during the last 1000 hours: 50 percent NaOH electrolyte at 130 C and 37 ma/cm^2. The conditions result in an equilibrium water vapor pressure above the electrolyte of about 450-mm mercury. Thus, the minimum operational temperature of the water reservoir would be 86 C, the equivalent vapor pressure for pure water. In the experiment, the vapor generator temperature was initially adjusted to maintain 90 C after which electrolysis was initiated. Since the exact vapor pressure driving force required for vapor absorption was not known, it was planned to arrive at the value empirically. For example, incremental increases in the vapor generator temperature above the 90 C according to a visual inspection of the matrix condition and/or the voltage deviation from the initial cell voltage.

The water vapor pressure corresponding to a vapor generator temperature of 90 C (526-mm Hg) appeared to be adequate for supplying vapor to the matrix. However, satisfactory H_2-transmission was not achieved in a 2-1/2-hour run. Best H_2-transmission obtained was about 76 percent which was obtained 2 minutes after initiating the experiment. A check of the cathode tube after termination of the run showed that the poor result was not

due to contamination. It is postulated that the low efficiency was due to an unequal distribution of current density caused by a diamond layer deficient in capillary pores. The postulation is based on a visual inspection of the matrix condition which showed that the top 2/3 of the matrix was too dry, while the bottom 1/3 was too wet, although not dripping. It appeared that essentially all of the electrolysis was taking place in the wet area, and that the MECD may have been exceeded. A 10-minute gas collection made just prior to termination of the run indicated that the undiffused hydrogen was in the O_2 stream, and not catalytically consumed in the cell.

DIAMOND POWDER WITH FLAT PLATINUM POROUS ANODE

A flat diamond matrix cell was constructed using 1/2-3 micron diamond powder. Since a platinum screen was not available that would contain the smaller diamond particle size, a procedure was developed to fabricate a sintered platinum powder plaque for use as the anode.

The cell was constructed by the following procedure using a 6.35-6.35-mm OD x 0.13-mm-thick wall Pd-25Ag tube for the cathode:

- The bottom 5 cm of a tube was flattened by pressing the tube between two stainless-steel blocks in a press to 3000 psi
- After pressing, the tube was taped off with Teflon tape to expose two cathode areas of 1 cm x 5 cm
- A thin diamond matrix of about 0.075-mm thickness was then painted on the cathode area from a thick water slurry prepared from 1/2-3 micron diamond powder
- The cathode area of the tube was then sandwiched between two flat, sintered platinum anodes which were prepared by procedures described below
- The ends of the anodes were then taped, a platinum wire lead was attached, and the matrix was impregnated.

Preparation of Sintered Platinum Powder Anode

Porous anode plaques were constructed from 52-mesh, 5-mil wire, pure-platinum screen, and pure platinum powder of minus 325-mesh size. Fabrication procedure was as follows:

(1) A small amount of the powder was added to the screen on a ste[illegible]

(2) The void area of screen was filled by striking off the powder with a spatula

(3) Another steel block was placed on top of screen, and the powder and screen were compressed to 3000 psi

(4) After compressing, Step (2) was repeated with another 52-mesh screen over the compressed screen

(5) The latter screen was removed and Step (3) was repeated

(6) The compressed plaque was sintered in a vacuum atmosphere for 5-10 minutes at 1370 C.

This technique resulted in obtaining a platinum powder load of 0.1362 gram per cm^2 of screen area.

Vapor-Feed Evaluation (Run 7V)

Evaluation of the cell in the static vapor-fed unit was terminated after 10 minutes of operation at 130 C and 37 ma/cm^2 CD due to electrical shorting. Initial voltage of the cell was 1.538 volts which increased to 1.565 volts just prior to the short-circuit. The vapor generator of the vapor-fed unit was set at 80 C temperature during operation, 6 degrees below the equilibrium vapor pressure for the electrolyte conditions.

Inspection of the cell after terminating the run showed that shorting was due to crinkles in the cathode which were caused by expansion of the palladium-silver metal.

DIAMOND POWDER WITH CYLINDRICAL PLATINUM POROUS ANODE I

Experimental Run 8V

A second diamond matrix cell was fabricated using the 1/2-3 micron particle size diamond, and procedures outlined in the fabrication of the cell of run 7V except the cathode was not flattened. A schematic sketch of the cell is shown in Figure 14. The sintered porous platinum anode was preformed around the cathode tube prior to the diamond application. After fabrication, the cell was impregnated and evaluated in the static vapor-fed unit.

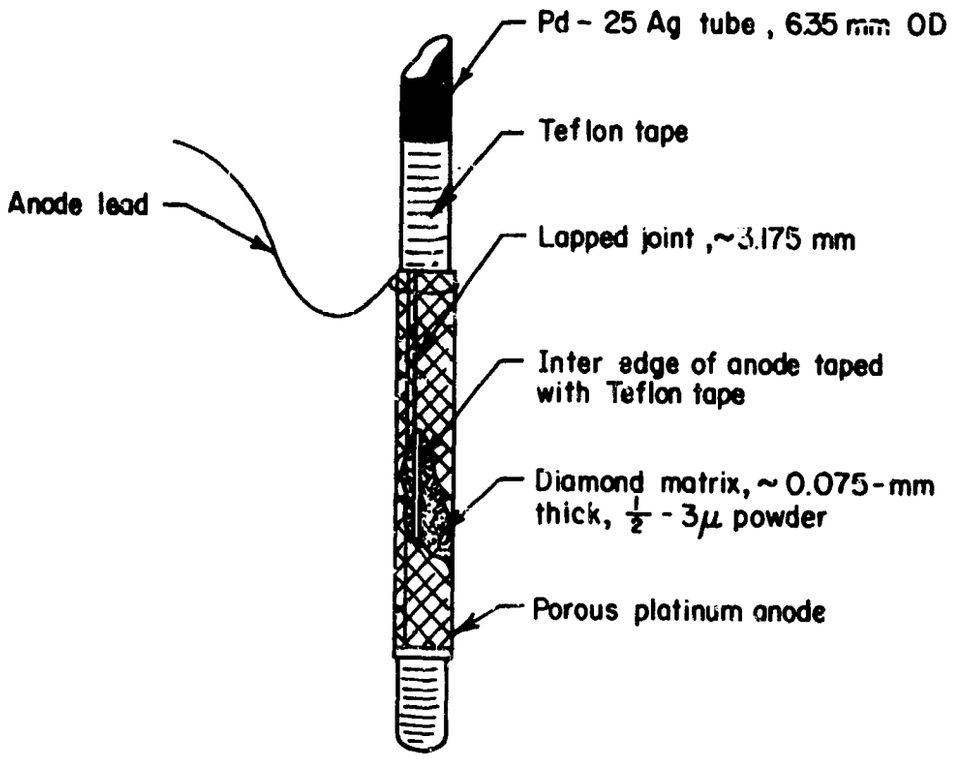

FIGURE 14. EXPERIMENTAL MATRIX CELL B

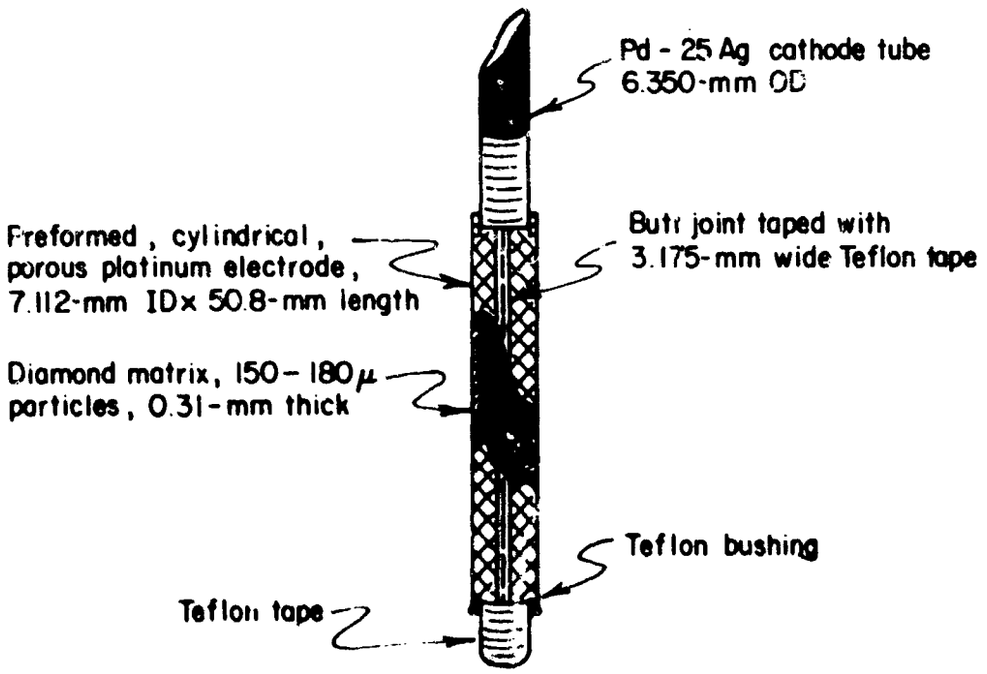

FIGURE 15. EXPERIMENTAL MATRIX CELL C

Operation of the cell was terminated after about 48 minutes of electrolysis due to an electrical short circuit. About 66 percent H_2-transmission was measured just prior to the failure. The cell was inspected after terminating the run, however, the area in which shorting occurred could not be detected.

Experimental Run 9V

A schematic sketch which illustrates the type of construction used to fabricate the diamond matrix cell used in run 9V is shown in Figure 15. The cell was the same as that used in run 8V except an attempt was made to circumvent the short-circuiting problems by expanding the lapped-joint of the cylindrical porous platinum anode so as to make a thicker matrix. A diamond particle size of 150-180 micron was used to form the 0.31-mm-thick matrix.

No short circuits occurred during 19 hours of operation of the cell in the static vapor-fed unit. However, the low hydrogen transmission of 75 percent (maximum obtained was 93 percent after 2 hours of operation) indicated electrolyte contamination. A subsequent investigation revealed that both the sintered platinum powder anode structure and the as-received diamond particles were contaminated. However, the type of contaminants encountered were found to be amenable to removal by pretreatment procedures which were discussed previously in this section.

Experimental Run 10V

The same cell used in run 9V was employed in run 10V except a diamond particle size in the 0.5-3-micron range was used to form the matrix.

An attempt was made to check the cell out in free electrolyte prior to installation in the static vapor-fed unit. However, due to the expansion of the cathode, a gap developed in the butt joint of the anode which resulted in some diamond material being lost. The free-electrolyte evaluation was consequently terminated after 3 minutes of electrolysis at 37 ma/cm^2 CD. The cell was transferred to the vapor-fed unit for a further attempt of an evaluation.

Acceptable H_2-transmission was only obtained for about a 1-hour period in the 8-hour run. The principal problem was containing the diamond material in the cell. When the anode was just moist, diamond particles would ooze from the anode, particularly in the area of the butt joint.

Experimental Run 11V

A schematic sketch which illustrates the type of construction used to fabricate the diamond matrix cell used in run 11V is shown in Figure 15. The cell was the same as that used in run 9V except the diamond material (150-180 micron particle size) and porous anode were pretreated to remove the contaminants which resulted in the failure of the latter cell. Descriptions of the pretreatment procedures which were developed to purify the diamond and platinum electrode were discussed earlier in this section.

In a 237-hour evaluation under vapor-fed conditions no problem was encountered with loss of diamond particles or cathode contamination. However, attainment of satisfactory operation throughout the 18-day evaluation period was prevented by intermittent short circuits. The latter problem appeared to be related to slight warping of the cathode caused by nonuniform current density and thus nonuniform expansion when charged with hydrogen.

Except for the problem of short circuits which relates to the physical cell design, there was encouraging evidence related to extended operation at elevated temperature. After 4 days at 160 C, satisfactory operation was attained for about 6 hours prior to a short circuit. Operation with water-vapor feed at 200 C was demonstrated for about 24 hours with 80-90 percent H_2-transmission and an everage cell voltage of 1.57 volts at 37 ma/cm^2. Following addition of more electrolyte to the matrix, 98 percent H_2-transmission was attained for 2 hours prior to weekend operation during which time another short circuit terminated the run. At the conclusion of this run (5 days at 160 C and 5 days at 200 C), the Pd-25Ag cathode was checked in a free-electrolyte cell and transmitted hydrogen satisfactorily. The absence of poisoning was encouraging.

DIAMOND POWDER WITH CYLINDRICAL PLATINUM POROUS ANODE II

Experimental Run 12V

A diamond matrix cell was fabricated which was similar to the cell shown in Figure 14 except a newly fabricated, larger diameter anode was employed in an effort to avoid the shorting problem. The cylindrical sintered platinum powder anode was constructed with a 3.2-mm lap joint and a 7.4-mm ID. The larger diameter resulted in a 0.5-mm-thick matrix (150-180 micron diamond) as opposed to the 0.31-mm-thick matrices used in the three prior experiments with cylindrical anodes.

In a static-vapor-fed evaluation, satisfactory H_2-transmission was not attained in the test which was initiated at 200 C cell temperature and 32 ma/cm^2 CD. Best result obtained at these conditions was about 64 percent H_2-transmission. Increasing the cell temperature up to about 230 C

did not improve diffusion efficiency. It was suspected that the cathode was poisoned, however, before terminating the experiments, current density limitations were explored at the 230 C temperature range.

In subsequent operations the current density was increased in increments up to about 120 ma/cm^2. No adverse effect was noted at the latter condition in a 30-minute operational period, however, a cell voltage of 1.675 volts was obtained, which appeared rather high for the applied conditions. Significantly, however, the vapor-fed unit appeared to be capable of supplying moisture to the matrix at a vapor generator temperature of about 94 C.

After terminating the run, the cathode tube was tested in free-electrolyte at the impregnation conditions and at 37 ma/cm^2 CD. About 50 percent H_2-transmission was obtained in the experiment. The cathode contained a thin dark deposit which was insoluble in 37 percent HCl solution at 25 C. A microscopic examination performed on the cathode indicated that the deposit was platinum powder. Also, an examination of the diamond matrix revealed that a copious amount of platinum powder was dispersed throughout the diamond particles.

Experimental Run 14V

The cell construction of run 14V was the same as that used in run 12V. Prior to fabricating the cell, the inside surface of the cylindrical anode was abraded with a stiff brush to remove loose platinum particles. After fabrication and impregnation, the cell was evaluated in the static vapor-fed unit at 200 C.

After 6 hours of electrolysis, an electrical short circuit developed in the cell and the run was subsequently terminated. The following significant observations, however, heretofore not observed in prior runs, were noted:

- No measurable amount of diffused hydrogen was noted up to about 1-1/2 hours after initiaton of the run. For the applied condition, diffused hydrogen gas should have been noted at least within 40 minutes after initiating electrolysis. Cell voltages of 1.51-1.56 volts were recorded which would be about the expected range if the cathode were not poisoned.

- After the 1-1/2 hour period the cell was removed, and an attempt was made to activate the inside surface of the cathode by applying a platinum black coating by procedure CP-2 of Section IV. During the next hour of operation, hydrogen diffusion still could not be detected and cell voltage remained at about the same value. The results indicated that the platinum-black catalyst had no beneficial effect with respect to H_2-transmission.

- The cathode was then given an anodic treatment at 2 amperes (264 ma/cm^2 CD) for 10 seconds in an effort to activate the front side of the cathode. However, the treatment had no apparent effect and hydrogen gas was still not evident after 30 minutes of operation.

- The cathode was given a second anodic treatment at 2 amperes for a 30-second period. Within 15 minutes after the treatment a few hydrogen bubbles appeared and the rate gradually increased to a steady-state 0.81 ml/min which was equivalent to about 39 percent H_2-transmission. The cell voltage at the steady-state condition remained about the same, 1.54 volts.

- Since the cathode responded to a front side but not a back side activation, it was concluded that perhaps poisoning the gas-phase side would be beneficial. Consequently, the insi surface of the tube was swabbed with an asbestos pad saturated with dibutyl phthalate. About 10 minutes after the application, a H_2-transmission of about 61 percent was obtained which further increased to 63 percent during the next 10 minutes of operation, at which time a second dibutyl phthalate application was made.

- After the second application the H_2-transmission increased to 82 percent within a 40-minute period, after which time the efficiency began to decrease and measured 77 percent 25 minutes later.

- The cathode tube was given a third dibutyl phthalate treatment and during the next 15 minutes the H_2-transmission increased to 95.5 percent after which time the short-circuit developed. Just prior to shorting the cell voltage measured 1.56 volts.

SECTION VI

EXTENDED OPERATIONAL RUN OF A DIAMOND MATRIX CELL

CELL CONSTRUCTION FOR RUN 15V

Construction of the cell used to demonstrate the feasibility of using diamond particles for a matrix material was based on technical accomplishments obtained in the preliminary runs discussed in Section V. Principally, run 4F had established the stability of a diamond matrix for over 2000 hours at 130 C. Also, the type of construction used to fabricate the cell was effective in circumventing electrical short circuiting problems which were prevelent in the other experimental runs. Thus, the cell for the extended operational demonstration run (run 15V of Table IV) was similar to the cell used in run 4F (Figure 13) except for the following changes:

- The same diamond powder was used but the particles were packed tighter. It was necessary to add a small amount of new diamond material which was purified by treatment procedure described in Section V.

- The Pd-25Ag cathode (6.35-mm OD x 0.13-mm wall) was a new tube that was mechanically cleaned and annealed only. The tube was checked for satisfactory hydrogen transmission in a free-electrolyte cell for 24 hours at 37 ma/cm^2 and 125 C. The charged tube was subsequently palladized on the electrolyte side by pretreatment procedure CP-4 of Section IV.

- The electrolyte concentration was selected for operation above 200 C. The assembled cell was initially impregnated with 80 wt.% NaOH (at 125 C) which is a higher concentration than used previously (50 wt.% NaOH). The electrolyte was prepared from a new supply of C.P. sodium hydroxide of a type designated as "carbonate free". This material has a higher degree of purity which is believed to be associated with the chemical treatment process for making it "carbonate free". Acceptability of the electrolyte was verified in a separate "control cell" operating at 125 C which was placed in operation 24 hours prior to run 15V. A new tube which was given treatments CC-1, CA-3, and CP-2 was used for the cathode. The "control cell" test was terminated after 840 hours of continuous satisfactory operation.

The cathode treatment was based on the results of run 14V which indicated that for operations at 200 C, the electrolyte side of the cathode should

be activated and the gas-phase side may necessarily be poisoned. An enlarged section through the diamond matrix cell is schematically shown in Figure 16.

OPERATIONAL RUN

Start-Up Of Run

The initial stage of the extended operational run is summarized in Figure 17. When the demonstration run was initiated, no H_2-transmission was obtained for about the first 2-1/2 hours of operation. During this period, as shown in Figure 17, the vapor generator temperature and current density were respectively increased to 37 ma/cm^2 (after 1 hour of operation) and 72-74 C (after 2 hours of operation) as to maintain a visibly saturated electrolyte condition in the matrix. A steady-state cell voltage of about 1.54 volts was obtained at the 37 ma/cm^2 CD which was about the value expected for the 200 C cell temperature. The vapor generator temperature, however, was about 10 C below the minimum value required for supplying water vapor to the impregnated matrix. However, since a further temperature increase would have resulted in cell flooding, the 74 C vapor generator temperature was maintained. It was postulated that the necessarily lower vapor generator temperature was due to two factors: (1) during the first hour of operation, the electrolyte may have concentrated from the impregnated 80 percent concentration to about 83 percent, and (2) hydrogen gas evolution on the electrolyte side of the cathode was expanding the electrolyte volume in the matrix.

After about 140 minutes of operation without H_2-transmission, the cell temperature was increased over the next 20-minute period to an estimated 220 C in preparation of making an asbestos addition to the inside of the cathode tube. The temperature increase was required to prevent cell flooding which otherwise may have occurred when the relatively cold asbestos was introduced into the tube. The introduction of the braided asbestos was slow, requiring about 5 minutes for installation.

Immediately following the asbestos addition, H_2-diffusion was noted, and about 10 minutes later an efficiency of about 45 percent was obtained. The cell temperature had dropped to about 210 C, and the heat input to the unit was adjusted to maintain this temperature. As shown in Figure 17, the H_2-transmission efficiency gradually increased to essentially 100 percent.

Extended Operation

A summary of the extended operational run of the diamond matrix cell is shown in Table VII. The cell performed satisfactorily at 210 ±4 C for 115 days after which time experimental work in the program was terminated. Presumably, the operational period could have been extended to at least 680 days

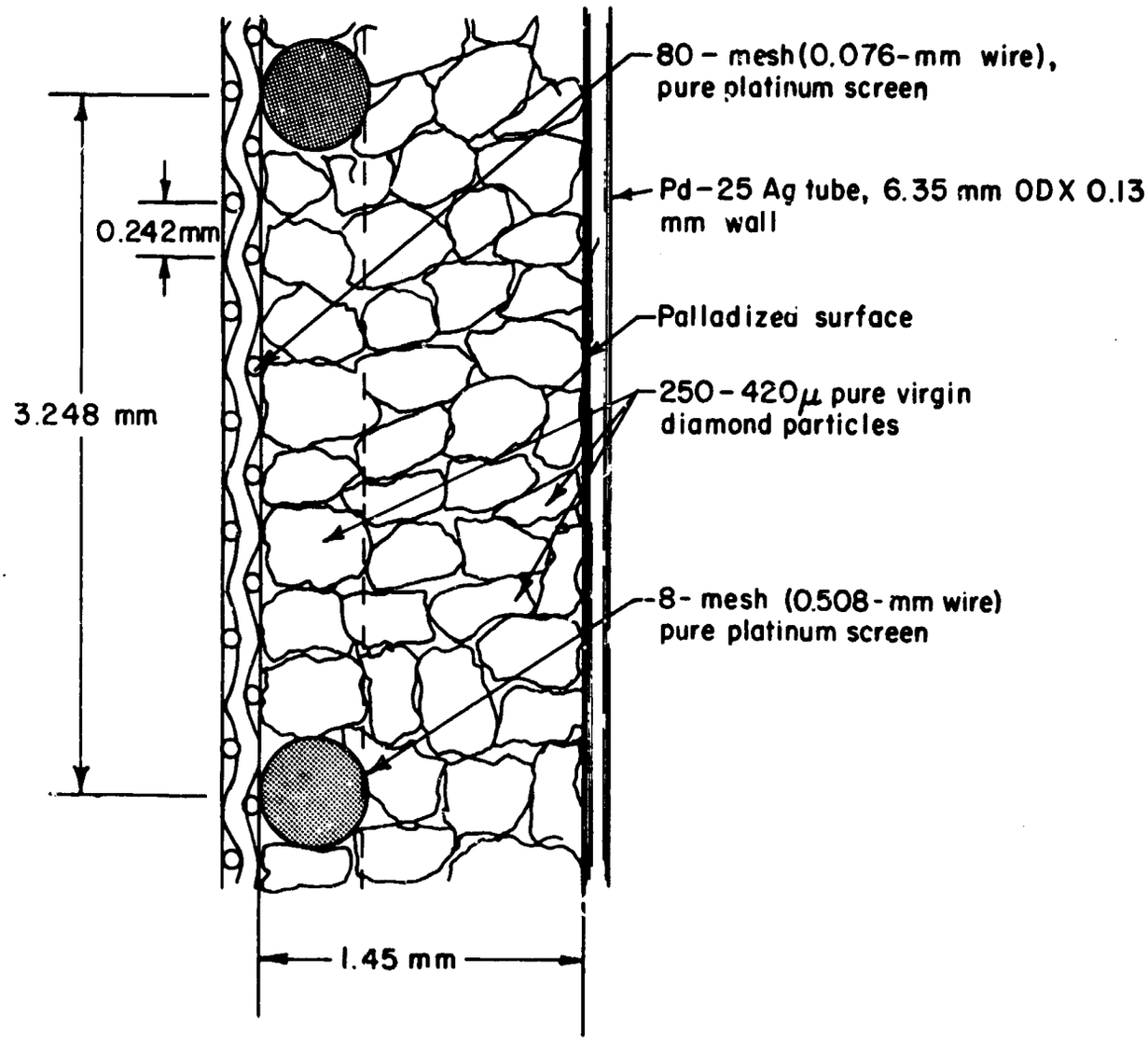

FIGURE 16. ENLARGED SECTION OF DIAMOND MATRIX CELL OF EXTENDED OPERATIONAL RUN

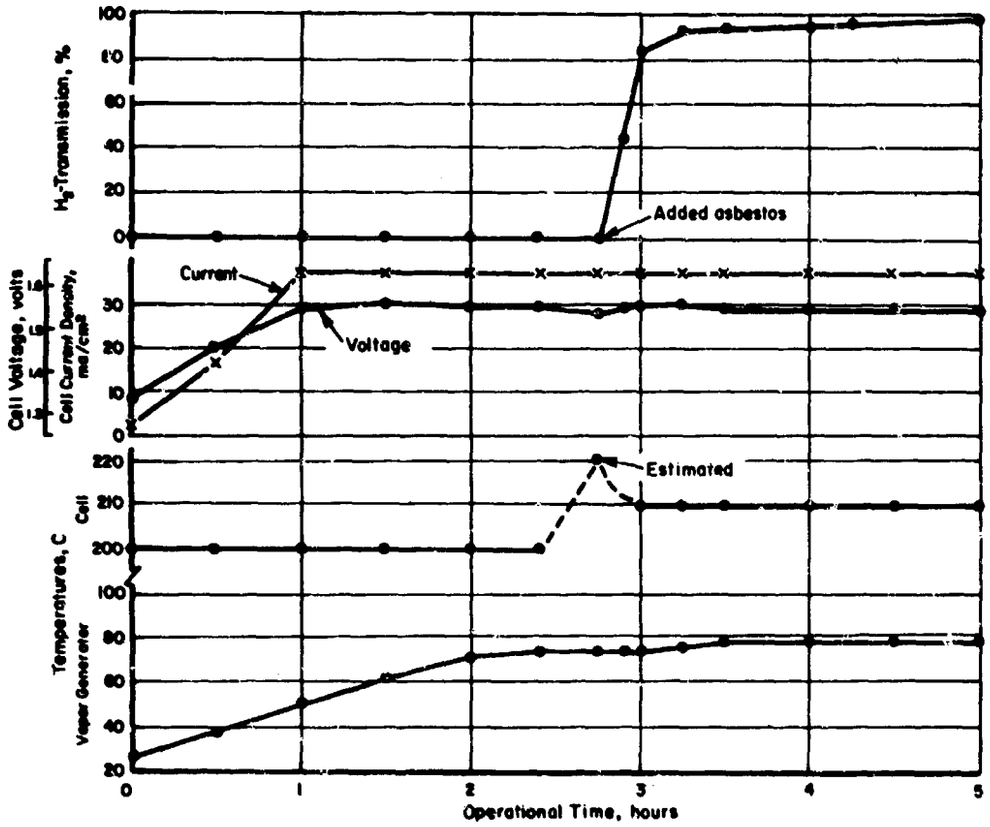

FIGURE 17. START-UP OF EXTENDED OPERATION RUN

TABLE VII. SUMMARY OF EXTENDED OPERATION OF VAPOR-FED DIAMOND-MATRIX CELL RUN 15V

Days of Continuous Operation	Accumulative Operational Days	Cause of Interruption in Operation[a]	Duration of Interruption,[a] days	Operational Current Density, ma/cm^2	Average Measured Values[b]		
					Cell Voltage, volts	Vapor Generator Temperature, C	H_2-Transmission, percent
49	52	Interruption in the building's main power lines	3	37	1.54	79	100±0.5
11	66	Ditto	3	37	1.54	79	100±0.5
25	94	"	3	74	1.62	90	100±0.5
18	115	Run terminated	--	148	1.68	97	100±0.5

(a) During period of interruption, the cell was stored in a sealed Teflon bottle.
(b) Cell temperature, 210±4 C.

at the 37 ma/cm^2 current density (minimum reliability period of the Pd-25Ag cathode as demonstrated by the free-electrolyte extended run of Section II). However, the 115 days exceeded the present goal (200 hours at 200 C) by more than tenfold.

After about 17 days of satisfactory operation at 100 ±0.5 percent hydrogen transmission, there was an overnight failure of the thermistor controlling the water-vapor generator temperature. Slight flooding probably occurred with some loss of electrolyte from the matrix as evidenced by a slight increase in cell voltage and a small gradual decrease in hydrogen transmission. However, after 42 days of operation, the hydrogen transmission was still above 95 percent. Attempts to compensate for electrolyte loss by slight increase in partial pressure of water-vapor feed (from 341 to 370 mm Hg) and decrease in cell temperature (from 210 to 195 C) were not successful in restoring H_2-transmission during a 24-hour period. Therefore, after 43 days a small amount of electrolyte (~0.3 ml) was added to the matrix and the voltage and hydrogen transmission improved: 97.6 percent and 1.514 volts after 46 days, and 100 percent and 1.519 volts after 49 days. The cell temperature, after the reimpregnation, was again adjusted to maintain the 210 C cell temperature.

During the remaining period of the run, there were three interruptions which were caused by changes in the building main power lines: after 49 days, 63 days, and 91 days of operation. During these interruptions (3 days each), the matrix cell was removed from the vapor-fed unit and stored in a sealed Teflon bottle.

After the second and third interruption, the current density was increased two-fold respectively to 74 ma/cm^2 and 148 ma/cm^2. For continued satisfactory operations at a cell temperature of 210 C, it was necessary to increase the water-vapor generator temperature about 10 C to 90 C in the former current increase, and about 7 C to 97 C in the later case.

After each interruption, the cell was first installed in the vapor-feed unit, after which the heating units for both the cell and vapor generator were turned on. Electrolysis was then initiated after all units had reached the desired operational temperatures.

SECTION VII

PHOSPHORIC ACID STUDY

INTRODUCTION

The study of the feasibility of using Pd-25Ag electrodes with phosphoric acid electrolyte was directed toward use in electrolysis cell which operates on water-vapor in cabin air (ref 6). The latter type of electrolysis cell requires an acid electrolyte and is characterized by forced flow of cabin air across the anode screen electrode at high rates so as to maintain relatively low cell temperatures of about 30 C (higher temperatures of 50 C - 80 C might be considered). The development of the water-vapor electrolysis cell with phosphoric acid electrolyte (based on platinum screen cathodes) had advanced to the stage of satisfactory evaluation of a prototype module (1/3 - man) for about 2000 hours. A possible problem area anticipated for integration with other life support systems was the limitation on hydrogen pressure (i.e., differential pressure across matrix to the anode side when operated directly on cabin air at reduced pressure). Thus, the interest in incorporation of Pd-25Ag hydrogen-diffusion cathodes in the acid-electrolyte cell related to the following potential advantages: delivering hydrogen at elevated pressure independent of gas pressure at the anode, simplification of controls of differential pressure, possible simplification of cell construction, and the added value of pure, dry hydrogen.

SUMMARY OF PRIOR WORK

In prior work (ref 3) at Battelle–Columbus, brief exploratory experiments had shown that attainment of 100 percent hydrogen transmission for Pd-25Ag cathodes was feasible in a free-electrolyte of phosphoric acid (minimum of 4 hours). In the prior work with 85 wt % H_3PO_4 at 60 C, it was shown that cathode activation CA-2, while adequate for alkaline electrolytes at that temperature and a current density of 37 ma/cm^2, was inadequate for the acid electrolyte. Also, CA-2 plus CP-3 (palladize gas phase side) was inadequate. However, CA-2, CP-3, and CP-4 (palladizing the electrolyte side) permitted 100 percent H_2-transmission. It was anticipated that further work was needed to develop a suitable matrix for acid electrolyte (and compatible with Pd-25Ag cathodes) and demonstrate extended operation on cabin air. The experimental study was resumed on the present program as discussed below.

EXPERIMENTAL RESULTS AND DISCUSSION

Table VIII summarizes six preliminary experiments that were performed during this program. The experimental conditions and treatment of the Pd-25Ag cathode tubes were essentially the same (at least runs P-1 and P-2) as those used in prior work (ref 3) for the successful 4-hour with the following exceptions:

TABLE VIII. RESULTS OF PHOSPHORIC ACID ELECTROLYTE EVALUATION[a]

Run No.	Experimental Conditions[b] Cathode Treatment	Voltage, volts	Temperature, C	Period of 95-100 percent H_2-Transmission, hr	Remarks
P-1	CC-1, CA-3, CP-3, CP-4	2.31	60	17	No indication of performance deterioration when run voluntarily terminated.
P-1M	Ditto	2.33	60	None	With matrix and anode screen added to cathode of run P-1, best H_2-transmission was 93 percent obtained for 4-hour period after initiation. Thereafter, the H_2-transmission decreased and measured 77 percent 40 hours later.
P-2	"	2.34	60	>2, <64	Run repeating P-1 started prior to weekend, 2 hours of satisfactory H_2-transmission was obtained after initiation, but was nil 64 hours later.
P-3	CC-1, CA-3 CP-2	2.28	80	0.5	No indication of performance deterioration when run voluntarily terminated.
P 3M	Ditto	2.26	80	None	With matrix and anode screen added to cathode of run P-3, best H_2-transmission obtained was 37 percent in a 21-hour run.
P-4	"	2.33	80	45	Run repeating P-3, after 45 hours H_2-transmission started to decrease and measured 19 percent 96 hours later.

(a) Phosphoric acid, 85 wt % solution, pre-electrolyzed by treatment procedure ET-5 (Section II); Pd-25Ag cathode (6.35 mm OD x 7.6 cm effective length, 15.2 cm^2 electrolysis area). 37 ma/cm^2 cathode current density.

(b) All runs were conducted in free-electrolyte experimental unit shown in Figure 11 using cyclindrical, bright platinum foil of the unit shown in Figure 11 as the anode for evaluation of cathodes only; for runs P-1M and P-3M with added matrix (blue crocidolite asbestos) and platinum screen anode (80 mesh, 3-mil wire), the latter cell anode was used for electrolysis.

- The phosphoric acid electrolyte was preelectrolyzed prior to use on the premise that such treatment was often beneficial and had never been shown to be detrimental in prior work with alkaline electrolytes

- The acid activation (CA-2) used in prior work was replaced by the standard procedure of CC-1 (mechanical cleaning) and CA-3 (annealing) prior to surface pretreatments (i.e., palladizing).

In run P-1, satisfactory H_2-transmission was readily attained and there was no evidence of a problem so the same cathode was used to evaluate the asbestos matrix (run P-1M). Contamination by asbestos would not have been unexpected although the use of a platinum screen over the matrix and in close proximity to the cathode may have been a contributing factor to the rapid contamination. However, the next experiment (P-2) clearly indicated that there was a contamination problem independent of the matrix material.

Run P-3, P-3M, P-4, reaffirmed the preceding results using a different pretreatment procedure (platinizing the gas phase side only; no deposit on the electrolyte side initially). A visual inspection of the cathode after failure in run P-4 revealed that the electrolysis area of the cathode was covered with a thin, black deposit (presumably platinum black) that could be wiped off with tissue paper. Also a dark precipitate was observed in the electrolyte which was analytically identified as platinum black. The evidence pointed to anodic corrosion of the platinum (bright foil in run P-4) in phosphoric acid electrolyte at 60 - 80 C. While lower temperatures (down to 30 C) would be permissible for practical electrolysis cells and might extend the operating life with platinum anodes, the lower temperatures at practical current density present an experimental limitation in separating the various possible causes of failure (i.e., initial electrolyte purity, anode material, matrix, or effectiveness of cathode pretreatment).

At the present time, the matrix is considered a minor problem since other matrices are now available (i.e., diamond powder, boron nitride powder). In future study, consideration should be given to various platinum alloys (i.e., platinum-iridium alloy, platinum-rhodium alloy). In reviewing the results, the decision to preelectrolyze the phosphoric acid (in the absence of evidence of initial electrolyte contamination) should be reconsidered in future work. An interesting observation is that platinum - 10 rhodium alloy screens (80 mesh, 3-mil wire) were used for electrodes in treating the electrolyte, and no electrode deposit or precipitate in the electrolyte was noted after the preelectrolysis treatment (200 ma/cm^2 CD at 50 C for 18 hours). Thus, this alloy should be investigated in future work.

SECTION VIII

LIST OF REFERENCES

(1) Clifford, J. E. and Faust, C. L., Research on the Electrolysis of Water with a Hydrogen-Diffusion Cathode to be Used in a Rotating Cell, AMRL-TDR-62-94 (AD 289 024), Aerospace Medical Research Laboratories, Wright-Patterson Air Force Base, Ohio, August 1962.

(2) Clifford, J. E., Kolic, E. S., and Faust, C. L., Research on a Gravity-Independent Water-Electrolysis Cell with a Palladium-Silver Alloy Cathode, AMRL-TDR-64-44 (AD 603 358), Aerospace Medical Research Laboratories, Wright-Patterson Air Force Base, Ohio, June 1964.

(3) Kolic, E. S., Clifford, J. E., and Faust, C. L., Water-Electrolysis Cells Using Hydrogen-Diffusion Cathodes, AMRL-TR-67-65 (AD 664 361), Aerospace Medical Research Laboratories, Wright-Patterson Air Force Base, Ohio, November 1967.

(4) Clifford, J. E., et al., Investigation of an Integrated Carbon Dioxide-Reduction and Water Electrolysis System, AMRL-TR-66-186 (AD 655 937), Aerospace Medical Research Laboratories, Wright-Patterson Air Force Base, Ohio, April 1967.

(5) Kim, B. C., et al., Carbon Dioxide Reduction System, AMRL-TR-67-227 (AD 673 903), Aerospace Medical Research Laboratories, Wright-Patterson Air Force Base, Ohio, February 1968.

(6) Clifford, J. E., Water-Vapor Electrolysis Cell With Phosphoric Acid Electrolyte, Paper 670851, Society of Automotive Engineers, Aeronautic and Space Engineering and Manufacturing Meeting, Los Angeles, California, October 2-5, 1967.

(7) Clifford, J. E., et al., Research on the Electrolysis of Water Under Weightless Conditions, AMRL-TDR-62-44 (AD 238 755), Aerospace Medical Research Laboratories, Wright-Patterson Air Force Base, Ohio, May, 1962.

(8) Clifford, J. E., Kolic, E. S., and Gates, J. T., Development of a Rotating Water-Electrolysis Unit, AFFDL-TR-67-111, Air Force Flight Dynamics Laboratory, Wright-Patterson Air Force Base, Ohio, July, 1967.

Security Classification

DOCUMENT CONTROL DATA - R & D

(Security classification of title, body of abstract and indexing annotation must be entered when the overall report is classified)

1. ORIGINATING ACTIVITY *(Corporate author)* Battelle Memorial Institute, Columbus Laboratories 505 King Avenue Columbus, Ohio 43201	2a. REPORT SECURITY CLASSIFICATION UNCLASSIFIED 2b. GROUP N/A

3. REPORT TITLE

WATER-ELECTROLYSIS CELLS USING HYDROGEN-DIFFUSION CATHODES

4. DESCRIPTIVE NOTES *(Type of report and inclusive dates)*

Final Report, April 1967-July 1968

5. AUTHOR(S) *(First name, middle initial, last name)*

Edwin C. Kolic
John E. Clifford

6. REPORT DATE February 1969	7a. TOTAL NO. OF PAGES 62	7b. NO. OF REFS 8
8a. CONTRACT OR GRANT NO. F 33615-67-C-1515 b. PROJECT NO. 6373 c. Task No. 637302 d. Work Unit No. 637302038	9a. ORIGINATOR'S REPORT NUMBER(S) 9b. OTHER REPORT NO(S) *(Any other numbers that may be assigned this report)* AMRL-TR-68-157	

10. DISTRIBUTION STATEMENT

This document has been approved for public release and sale; its distribution is unlimited.

11. SUPPLEMENTARY NOTES	12. SPONSORING MILITARY ACTIVITY Aerospace Medical Research Laboratory, Aerospace Medical Div., Air Force Systems Command, Wright-Patterson AFB, OH 45433

13. ABSTRACT

A matrix based on diamond powder was satisfactory for extended use over 200 C electrolyte temperature in oxygen-generating electrolysis cells using Pd-25Ag hydrogen diffusion cathodes and operating on a water-vapor feed. Over 2500 hours of essentially 100% hydrogen transmission was demonstrated with a small experimental cell containing: 6.35 mm OD x 0.13 mm wall Pd-25Ag tube cathode; platinum screen anode; 250-420 micron-size diamond powder matrix initially impregnated with 80 wt % sodium hydroxide electrolyte. The cell was evaluated in an experimental unit that maintained the cell temperature at 210 ± 4 C and the water-vapor generator at 78 C to provide a water-vapor feed at 340 mm Hg partial pressure for operation at 37 ma/cu cm cathode current density with a cell voltage of 1.54 volts. At the 97 C limit of the experimental unit for static water-vapor feed, operation was satisfactory for a current density of 148 ma/cu cm at 1.68 volts for over 400 hours before the run was voluntarily terminated. A separate evaluation of Pd-25Ag cathode alone in a free-electrolyte at 145 C and 37 ma/cu cm was extended to over 16,000 hours of satisfactory performance for hydrogen diffusion. Experiments on the use of phosphoric acid electrolyte was Pd-25Ag cathodes at 37 ma/cu cm showed that satisfactory hydrogen diffusion was limited to about 45 hours and could be attributed to contamination resulting from anodic corrosion of platinum anodes at 80 C in 85 wt % H_3PO_4.

DD FORM 1 NOV 65 1473

Security Classification

Security Classification

14. KEY WORDS	LINK A ROLE	LINK A WT	LINK B ROLE	LINK B WT	LINK C ROLE	LINK C WT
Water-Electrolysis Cell						
Hydrogen-Diffusion Cathode						
Palladium-Silver-Alloy Cathode						
Platinum-Alloy Anode						
Diamond Powder Matrix						
Caustic Electrolyte						
Phosphoric Acid Electrolyte						
Electrolytic Hydrogen and Oxygen						
Aerospace Life Support						
Environmental Control						

Security Classification