AD 689859

THE UNIVERSITY OF MICHIGAN

Technical Report 16

CONCOMP

March 1969

A SURVEY OF PICTORIAL DATA-COMPRESSION TECHNIQUES

Jack L. DiGiuseppe

Approved for public release and sale; its distribution is unlimited

DDC
RECEIVED
JUN 20 1969
B

65

THE UNIVERSITY OF MICHIGAN

Technical Report 16

A SURVEY OF PICTORIAL DATA-COMPRESSION TECHNIQUES

Jack DiGiuseppe

CONCOMP: Research in Conversational Use of Computers
ORA Project 07449
F.H. Westervelt, Director

supported by:

DEPARTMENT OF DEFENSE
ADVANCED RESEARCH PROJECTS AGENCY
WASHINGTON, D.C.

CONTRACT NO. DA-49-083 OSA-3050
ARPA ORDER NO. 716

administered through:

OFFICE OF RESEARCH ADMINISTRATION ANN ARBOR

March 1969

ABSTRACT

The results of a survey of pictorial data compression techniques are summarized in this report. The survey was motivated by a study of half-time graphics communication over voice-grade lines. The principal compression techniques surveyed include the following: the optimization of the parameters of ordinary pulse coded modulation, pulse coded modulation using added pseudo-random noise, differential pulse coded modulation, predictive differential pulse coded modulation, run-length encoding, brightness contour detection and encoding, area encoding, picture compression in the Fourier domain.

TABLE OF CONTENTS

ABSTRACT iii

1. CONTEXT OF THE PROBLEM 1

2. PREVIOUS WORK 6

2.1 PURE PULSE CODED MODULATION 7

2.1.1 Prefilter Characteristics 9
2.1.2 Scanning Pattern 10
2.1.3 Sampling Rate 11
2.1.4 Brightness Quantization 13
2.1.5 Transmission Code 16
2.1.6 Post filter Characteristics 18
2.1.7 Summary 18

2.2 DIFFERENTIAL PULSE CODE MODULATION 19

2.2.1 Ordinary DPCM 19
2.2.2 Predictive DPCM 20
2.2.3 Advantages of DPCM 22
2.2.4 Disadvantages of DPCM 23
2.2.5 Summary 23

2.3 PCM USING FREQUENCY SEPARATION 23

2.4 PROPERTY DETECTION AND ENCODING 25

2.4.1 Run-Length or Differential-Coordinate Encoding 25
2.4.2 Restricted Run-Length Encoding 28
2.4.3 Dual Mode and Edge Detection Systems 33
2.4.4 Contour Detection and Encoding 39
2.4.5 Area Encoding 43

2.5 COMPRESSION TECHNIQUES USING PICTURE TRANSFORMATION . 44

REFERENCES 47

LIST OF FIGURES

Figure 1. Some Results of Michel's Run-length Encoding[24] 27

Figure 2. Waveforms of the Synthetic-Highs System[38] 35

Figure 3. A one-Dimensional Example of the Synthetic "Highs" System for Step Function Input[44] 40

LIST OF TABLES

Table I. Contour Coding for Figures 16, 17, and 18[44] . . .41

1. CONTEXT OF THE PROBLEM

The general problem to be addressed is the efficient storage and transmission of graphical, textual, and pictorial data. The data are assumed to exist initially in the form of "hard copy," such as on paper, and are to be converted to a form which can be stored on devices accessed by a high-speed digital computer. It is intended that the data be stored in a central data processing facility which can be accessed rapidly by many remote stations, each containing a device suitable for receiving and displaying the data.

It is further assumed that the data will not be radically changed at the remote station; however it is hoped that the ability to make limited modifications will be included. Therefore, the scheme used to convert the data from external "hard copy" form to its internal stored form need not include the ability to incorporate efficiently modifications since these will usually be few in number. In addition, the conversion scheme need not be fast in terms of processing time, since the efficient conversion of the data from hard copy to computer storage will normally only occur once. This would not be the case if the data were continually subjected to modification in an interactive mode at the remote terminal. In such a case, after each modification, the data would have to be reconverted to an efficient internally stored form during the interactive session. This would call for a very rapid

conversion scheme, since it is assumed that after each modification of the data an updated version would have to be transmitted to the remote terminal. One possibility, if the modifications are minor during a given terminal session, would be to efficiently reconvert the data at the end of a terminal session. This would avoid the degrading effect of cumulative minor modifications to a given datum.

The type of problem I am discussing arises in the storage and retrieval of data which have been accumulated from various sources. In general, these data have been assembled to provide rapid access of previously published material to a large number of individuals. These individuals do not wish to modify the data; they wish to search through the data for information about which they may know only certain key words--an author or a date, for example--which are associated with the data. Each item of information, such as a page of a journal article, available within such a system would be converted only once into an efficient internally stored form. Most of the information stored in such a system would consist of pure text, which could be keypunched for card input or read and converted to some character code, such as ASCII, by optical character-recognition devices. For text this is undoubtedly an efficient internally stored form. However, a great deal of the information to be stored would consist of a combination of pictures, drawings, tables, graphs, and text.

There is no obvious efficient way to store and transmit this mixed type of information.

This kind of information would also commonly be encountered in an industrial organization where a central store of managerial and engineering data could be accessed by a manager or an engineer who wishes to view previously prepared graphs, charts, or drawings without necessarily wishing to modify them.

In the two examples given above, an important factor is the time required to access and display the desired data. This is especially true in an information retrieval system where the user is led from one piece of data to the next, such as when one book references another, or a given key word leads to a whole list of possible articles and each article must be examined individually. From a 'human factors' standpoint the system must be capable of responding rapidly to the user.

I am not concerned here with the time required to locate a piece of data in the various mass storage devices of the system or with the way in which such files should be organized to minimize this access time. The problem I am interested in is the time required to transmit the accessed data and display it at the remote terminal. This transmission time is, of course, a function of the bandwidth of the transmission link, which brings in another factor.

the cost. In order for the kinds of systems that have been mentioned to be practical they must be relatively inexpensive on a per-terminal basis. One of the costs associated with the terminal is that of the communications link between the remote terminal and the central information facility. It could range from voice-grade public telephone lines to a private, leased, high-performance communications link. The cost and bandwidth increase as one goes from the former to the latter. We would like to keep the transmission time low and at the same time use an inexpensive communications link. Whether or not this will be feasible depends on the amount of data to be typically transmitted and the response time desired. Other factors which will appear later are the coded form of the data and the cost of a remote terminal capable of decoding and displaying the data.

It is assumed at the outset that the data will be stored in digital form. This requires that the data be somehow sampled and coded in terms of sequences of bits. The first thing that must be decided is the spatial rate at which a piece of printed matter must be sampled in order to preserve the information present. I shall start out by assuming that the material to be digitized is black and white with no shades of gray. Theoretically if the material is sampled at twice the highest spatial frequency, or greater, then it is possible to reconstruct perfectly the material.

Some redundancy is needed to compensate for noise introduced in the sampling, transmission, and reconstruction processes. A limited sample of line drawings and fine print such as pica-typewriter characters yields line-width values of 0.01 inches or larger, with line separation being two or more line-widths. This implies a spatial frequency of 1 cycle/0.03 inches or 33.3 cycles/inch as an upper limit. Therefore, the sampling rate should be 66.7 samples/inch minimum. For convenience, consider a sampling rate of 100 samples/inch. If this rate is used to digitize a standard 8-1/2-inch by 11-inch page, the number of bits that would result would be (8.5x100) x(11x100)=935,000. It is assumed that the page is entirely black and white and that a 0 bit represents white and 1 bit represents black. If one were to take a very naive approach and attempt to transmit the picture by transmitting all the sampled bits, how long would it take? Using voice-grade telephone lines at the teletype rate of 110 baud or 110 bits per second, it would take 8,500 seconds. At 2,000 baud, it would require 467.5 seconds. Actually a transmission rate of about 500,000 baud would be needed to make the transmission time reasonable for interactive remote terminal usage. But the cost of such a high data rate is incompatible with the goal of an inexpensive terminal system.

Another consideration is the cost of storing 935,000 bits for each digitized page of data. If the 935,000 bits are compacted into bytes, we require 116,875 bytes of storage, or 28.5 pages of storage assuming 4096 bytes per page. This is obviously a prohibitive amount of storage for a single 8-1/2 x 11 page of data and dramatically points out the need for some form of coding and compression of the data.

2. PREVIOUS WORK

A great deal of work has already been done in this area, but the results have been disappointing. Most of the work has been directed toward television bandwidth compression. One measure of success for any data compression or coding scheme is a suitably defined compression ratio. A commonly used definition is the following: let B be the number of bits produced by scanning a given piece of graphic material at a spatial frequency equal to twice the highest spatial frequency encountered in any data to be scanned (this is known as the Nyquist rate); let N be the number of bits that result when the original B bits are compressed and encoded according to the scheme being evaluated; then the compression ratio is $R=B/N$. Most previously reported schemes achieve maximum values of R that range between 30 and 40, with values less than 10 being most common. The previous analysis implies the need for a compression ratio on the order of 200 or 300. This would bring the transmission

time for an 8-1/2 x 11 inch page into the range of 1 or 2 seconds using a 2,000-baud transmission rate. The next few sections will describe some compression techniques which have been investigated.

2.1 PURE PULSE CODED MODULATION

Pulse coded modulation, commonly abbreviated PCM, was invented by Reeves[1] in the 1930's; however, it did not find wide application until very recently. This was primarily due to the unavailability of circuit components capable of high-speed switching and pulse regeneration. PCM has several advantages[2,7] relative to analog transmission techniques:

1. It uses time-division multiplexing in contrast to frequency-division multiplexing commonly used with analog transmission techniques;

2. PCM signals can be transmitted over long distances using pulse regeneration circuits, or repeaters, spaced at regular intervals without cumulative deterioration in the signal-to-noise ratio;

3. PCM techniques are compatible with the transmission of digital data to, from, and between digital computers;

4. PCM signals are easily switched.

The disadvantages of PCM are the cost of terminal equipment and, compared to the original analog signal, the increased bandwidth.

PCM transmits a picture in the following way. The picture is scanned according to some pattern, usually but not exclusively with a television-type raster scan, and samples of picture brightness are taken at regular intervals along the scan pattern. The interval between samples is determined by the resolution requirements of the system. If it is assumed that all picture details are to be exactly reproduced, then the sampling theorem[3] requires that the sampling interval be equal to the period of twice the highest spatial frequency in the picture.

Each sample point generates a sequence of one or more bits. In the case of monochrome pictures, there are two levels, black and white, and each sample point corresponds to one bit, e.g., binary 1 represents black and binary 0 represents white. When pictures containing a continuum of grayness levels are sampled, each sample generates n bits where g , $(0<2^{n-1}<g<2^{n})$, is the number of grayness levels required to reproduce the picture according to some exactness criterion. Therefore, an essentially infinite number of grayness levels will be represented by a finite number of discrete levels, and it will be impossible to reproduce exactly the picture. In addition, in a picture having abrupt transitions from white to black the spatial frequencies will be quite high, and it will therefore be practically impossible to sample at a rate equal to twice

that of the highest spatial frequency.

Since PCM transmission of pictures yields only an approximation of the original picture, studies have been made to find the optimum parameters for a PCM transmission system.[2,4,5,6,8] The parameters are evaluated both subjectively by human observers and objectively using various optimization criteria.

The following is a representative list of PCM parameters to be optimized:

1. prefilter characteristics,
2. scanning pattern,
3. resolution or sampling rate,
4. number of brightness quantization levels,
5. transmission code,
6. and postfilter characteristics.

2.1.1 Prefilter Characteristics

The purpose of a prefilter [8,9,10] is to reshape the power spectral density of the signal in order that the signal may be quantized with greater accuracy. Since the signal itself consists of a continuum of picture brightness amplitudes, it will not be possible to represent precisely the amplitude at each sample point using a finite number of discrete levels. The difference between the signal amplitude and its quantized representation is known as quantization noise. It has been found that prefiltering

in error were pseudorandomly chosen the errors will be pseudorandomly distributed in the reproduced picture and, therefore, highly uncorrelated.

In statistical coding, one scan pattern may have advantages over another. The unconditional probability distribution of brightness levels does not vary for different scan patterns or for a certain picture sample space. However, this is not true for the various orders of conditional probability. For a particular sample space it should be possible to find a set of scan patterns for which the entropy, and therefore the number of bits required for transmission, is a minimum if the optimum statistical code is used. It is questionable whether the savings in transmission would be sufficient to warrant the added complexity. Also it is doubtful that the picture sample space normally encountered would exhibit sufficient stationarity from one picture transmission to the next to allow the use of a single statistical coding scheme.

2.1.3 Sampling Rate

The sample spacing for black and white pictures without grayness levels is determined by the width of the thinnest black or white region which will be encountered. Moreover the human eye must be able to resolve the region under normal viewing conditions. Straight lines of any slope and thickness should be reproduced as straight lines and should

not have a "staircase"-like appearance. In pictures which contain grayness levels, the picture brightness can be described as a function of the two picture planar coordinates f(x,y). If the x components of spatial frequency for all pictures to be sampled are less than some maximum frequency f_{xm}, then, according to the Sampling Theorem, a horizontal sampling rate $R_x \geq 2f_{xm}$ is sufficient to reconstruct those components. If a similar number f_{ym} exists for the y components of spatial frequency, then a vertical sampling rate $R_y \geq 2f_{ym}$ is sufficient. R_x and R_y expressed in samples per unit length determine the matrix of sample points to be used for PCM. Since the final picture will be viewed by a human observer, it may be possible to limit the sampling rate according to the bandwidth of the human eye with respect to brightness frequency response. This involves research into the psychophysics of human vision, which is beyond the scope of this preliminary paper. The literature on PCM that I have seen does not specify scan rates in sample points per unit length. Usually the size of the sampling raster is given in terms of sample points alone, and the actual dimensions of the raster in inches are not stated. Some common raster sizes that have been used in experimental systems are 128 x 128, 256 x 256, and 512 x 512, the last being appropriate to the PCM transmission of television pictures. A cursory examination of

black and white material, such as an 8-1/2 x 11-inch pica typewritten page or a line drawing, indicates the need for vertical and horizontal sampling rates on the order of 100 sample points per inch.

2.1.4 Brightness Quantization

Given a brightness sample one must decide which discrete brightness symbol to use to represent it. For black and white, only two symbols are used. If the brightness sample is above a certain threshold value, one symbol is transmitted, otherwise the other symbol is sent. If grayness levels are to be sent, then it must be decided how many different grayness levels are going to be used. If too few levels are used, the reproduced picture will have false contours and appear to be broken-up into distinct regions of constant brightness. If too many levels are used, then excessive or redundant information will be transmitted and the transmission time will be unnecessarily long. Experiments performed to evaluate various choices for the number of brightness levels indicate that anywhere from 2^4 to 2^7 levels can give satisfactory pictures. Powers of 2 are used because normally the brightness symbols are represented by a binary code. To partition the full range of brightness from white to black into intervals of grayness, such that each grayness interval is assigned one brightness symbol, two basic methods are used: uniform and logarithmic

partitioning. Logarithmic partitioning is based on experimental evidence that the human eye's response to light is proportional to the logarithm of the light intensity. Experimental evidence indicates that for a given picture quality logarithmic quantization requires one less bit per brightness symbol than uniform quantization. That is, half as many brightness symbols are sufficient. PCM using 6 bits per brightness symbol and uniform quantization is often used as a standard against which other data-transmission and data-compression schemes are compared.

A method described by Roberts[14] makes it possible to improve the quality of pictures which might otherwise contain quantization noise (e.g., false contours) without increasing the bits per brightness symbol required. The method involves adding pseudorandom noise to the picture before quantization and subtracting the same noise at the receiver. He has found that 3 bits per sample would be sufficient for transmitting most television pictures. Roberts defined an error criterion which could be used to judge quantitatively the quality of reproduced pictures. He assumed that the errors E in a reproduced picture consist of two components: the apparent noise in the output, V, and the tonal differences between the input and the output, D. Therefore $E = V + D$. The total error is defined as the mean square-error,

$$E = B \int_0^1 \int_0^1 p(y|x)(x-y)^2 dy\, dx,$$

where x is the input signal and y is the output. A flat distribution is assumed for the input, making p(x) constants. In this case E becomes,

$$E = A \int_0^1 \int_0^1 p(y|x)(x-y)^2\, dy\, dx,$$

where A is defined so that the minimum mean square error is unity. The apparent noise is defined as the variance of the output relative to the mean output with the input held constant,

$$V = A \int_0^1 \int_0^1 p(y|x)(y-\bar{y}_x)^2\, dy\, dx$$

where $\bar{y}_x = \int_0^1 p(y|x)y\, dy$.

The tonal error is a measure of the deviation of the mean output from the input in a region of constant input, and is defined so that E = V + D,

$$D = A \int_0^1 (x-\bar{y}_x)^2\, dx.$$

Now for straight PCM over a noiseless channel E=1, D=1, V=0 so the entire error is due to tonal error. If random noise with a flat distribution and an amplitude equal to one grayness level, 2^{-n}, is added to x, then

$$E = 1 + (1-2^{-n}),\ D=2^{-n},\ V=2(1-2^{-n}).$$

In this case the tonal error has been reduced at the expense of increased apparent noise. For $n \geq 3$ the reproduced pictures were free of false contours and $D \cong 0$ from a practical standpoint; also $V \cong 2$. If pseudorandom noise is used, the same noise which is added at the transmitter can be subtracted at the receiver. This has the effect of reducing V without increasing D. Now $E = 1 + 2^{-n}$, $D = 2^{-n}$, $V = 1$.

2.1.5 Transmission Code

The most common code used in PCM transmission is a straight binary code. If a non-statistical code is to be used there is very little reason for using a code other then the straight binary code, unless noise on the channel is a serious problem. In the case of a noisy channel with specified error characteristics and specified picture brightness statistics, it is possible to choose from a set of codes a particular code which is optimum, in the sense that the average noise power in the reproduced picture is a minimum.[2]

Another possibility would be to use variable length statistical coding. To do this it is necessary to compile statistics concerning the distribution of brightness symbols for all pictures to be transmitted. Studies of television picture statistics indicate that the unconditional picture brightness distribution is uniform but that adjacent samples are highly correlated.[15] Schreiber[12,13] has determined

the conditional probability distribution up to the second order for television pictures and has reported that the conditional entropy, $H_y(x)$, ranged from 1.85 for the simplest picture to 3.36 for the most complex, with an average at 2.62 bits per sample. This is to be compared with standard 6-bits-per-sample PCM and implies that statistical coding could decrease the average number of bits per picture by a factor of 2.2. This is not a very significant decrease considering the complexity of the encoding and decoding equipment. He gives a figure for the second-order conditional entropy, $H_{yz}(x)$, of 1.49 bits for a simple picture, which is 0.36 bits lower than $H_y(x)$ for the same picture. This would indicate that the added advantage of second-order statistics is small when compared with the increased complexity of the equipment necessary.

In another paper, Schreiber [11] evaluates a lower bound for the average entropy per picture element. He postulates a portion of a picture of uniform brightness where the neighboring picture elements are so highly correlated that any element-to-element variation in brightness is due primarily to Gaussian noise, whose r.m.s. value is equal to one brightness quantization level. The entropy for this case is computed to be 1.12 bits per brightness symbol. Therefore, for this limiting situation, the maximum possible compression ratio is $6/1.12 \cong 5.3$ to 1 when compared

with 6-bit PCM. This implies the use of variable-length statistical codes of high order involving rather long coding and decoding tables. Such complexity to achieve a compression ratio of less than 5.3 to 1 is unlikely, especially since a compression ratio at least ten times this is really needed.

2.1.6 Postfilter Characteristics

The postfilter is generally the inverse of the prefilter. It can also be used to eliminate "noise" whose spatial frequencies lie outside the range of the picture spatial frequencies.

2.1.7 Summary

The PCM techniques which have been described seem to be capable of achieving compression ratios as high as 5 to 1 when compared with standard 6-bit PCM. Roberts' method using the addition of pseudorandom noise appears to be a simple way to achieve a 2-to-1 compression ratio. Other schemes which achieve higher compression ratios generally involve statistical variable-length encoding. The complexity of statistical encoding and decoding and the nonuniformity of picture statistics would generally make such schemes unattractive in view of the low compression ratios yielded.

2.2 DIFFERENTIAL PULSE CODE MODULATION

Another widely studied transmission technique is differential pulse code modulation, abbreviated DPCM. The method consists of sending a quantized version of the difference between a function of the previous samples and the current sample. Let the i-th difference signal be d_i; let F_{i-1} be the function of the previous samples; and let s_i be the i-th sample. Then DPCM takes on the form $d_i = s_i - F_{i-1}$ where i is indexed over all sample points of a picture. It is assumed here that the picture has been raster-scanned and converted into a one-dimensional function of time.

2.2.1 Ordinary DPCM

For ordinary DPCM, F_{i-1} takes on the form

$$F_{i-1} = \sum_{j=1}^{i-1} [d_j],$$

where the brackets mean that d_j has been quantized. The DPCM system has the following diagram:

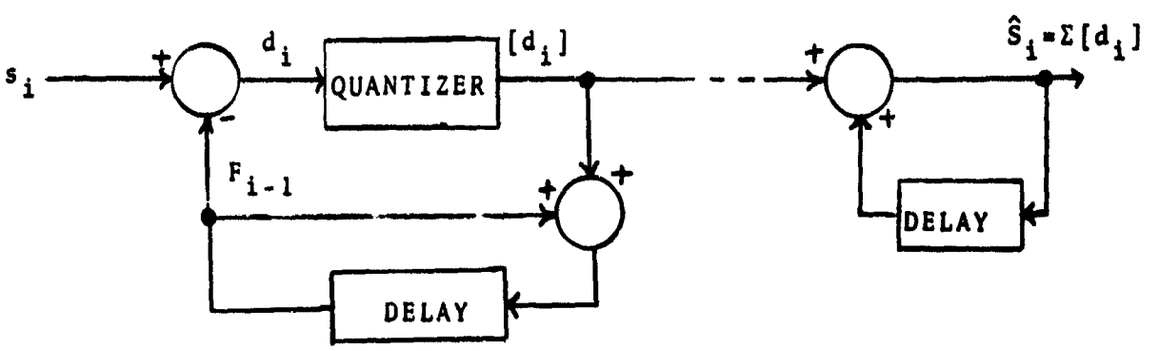

2.2.2 Predictive DPCM

Another type of DPCM is called predictive DPCM. In this case, F_{i-1} is a function which predicts the next sample's value on the basis of the value of previous samples. The quantized difference between the predicted and actual value is transmitted. The diagram follows:

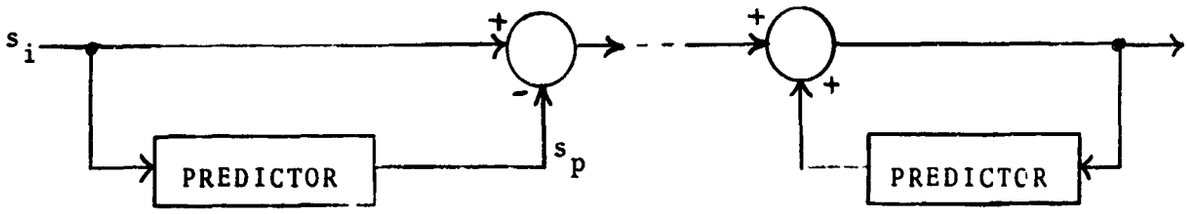

Various types of prediction functions can be used. They can be classed as linear or polynomial predictors. A linear prediction is a weighted sum of previous values and can be a "previous value," "slope," "planar," or "circular" predictor. The simplest linear prediction is one that predicts the current sample (s_i) to be equal to the immediately preceding sample (s_{i-1}) or to the sample directly above it on the previous scan line; however, the latter would involve storing an entire scan line. Slope prediction is a bit more complicated, involving two previous values, while planar and circular prediction are even more complicated involving 3 and 7 previous values, respectively, from more than one scan line. The equations for the various

forms of linear prediction and the raster sample points used are shown below.[16]

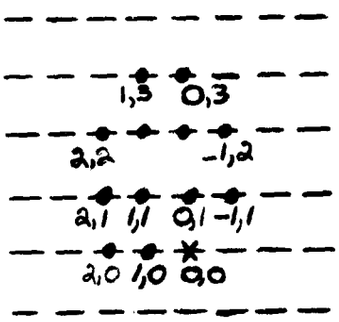

(x marks the current sample value to be predicted)

$s_p = s_{1,0}$ (previous value, same line)

$s_p = s_{0,1}$ (previous value, line above)

$s_p = 2s_{1,0} - s_{2,0}$ (slope)

$s_p = s_{1,0} + s_{0,1} - s_{1,1}$ (planar)

$s_p = s_{1,0} - s_{2,1} + s_{2,2} - s_{1,3} + s_{0,3} - s_{-1,2} + s_{-1,1}$ (circular)

Each type of prediction can predict certain picture entities. For example, planar and circular prediction will predict horizontal and vertical lines; lines at angles of ±52° are predicted by circular prediction. Harrison[16] experimented with various types of linear prediction and found that the predictive DPCM signal power is lower than the ordinary PCM signal power for the same picture. In addition, the DPCM error signals still contained considerable redundancy because, when the error signal alone was displayed on a TV monitor, the original pictures were clearly distinguishable.

Linear prediction is a special case of polynomial prediction. In general, polynomial prediction involves previous values raised to some power and, therefore, is considered too complex for our purposes. In fact, results indicate that "previous value" prediction eliminates most of the

redundancy and little is gained by higher-order prediction.[22]

2.2.3 Advantages of DPCM

The real advantage of DPCM is that the unconditional entropy of the error signal (based on the quantized error signal monogram statistics) is approximately equal to the first-order conditional entropy of the actual signal.[12] This means that the advantages of statistical coding can be obtained more easily by coding and transmitting the error signal. O'Neal [17] developed a theory of predictive DPCM which he used in conjunction with signal statistics to derive optimal prediction function coefficients. He found that a 3:2 savings in bit rate over straight PCM could be achieved. Graham [18,21] incorporated two properties of human vision into his predictive DPCM system and was able to achieve a 2:1 reduction in bit rate using 8-level (3 bits) error signal quantization. The first property of human vision which he used is the inability to detect amplitude distortion in chaotic, complex regions of a picture. The second property is the sensitivity of the human eye to distortion in simple, low-contrast, predictable, structured regions. Thus where the error signal is large (unpredictable, chaotic region) a few coarse quantum levels are used whereas for small errors, fine accurate quantization is used. Tests on four types of pictures gave entropies ranging from

2.1 to 2.64 bits per picture element. Graham also mentions alternate-mode predictive DPCM, where one of two prediction functions is used at each step depending on which gives the smaller error. For an assumed joint distribution function of the form $p(i,j)=Ka^{-|i-j|}$ Oliver[19] found that the entropy of a statistically coded "previous-value"-predicted error signal approached 2.918 bits per picture element.

2.2.4 Disadvantage of DPCM

The disadvantage of DPCM is that it is much more sensitive to noise then ordinary PCM. Since a reconstructed picture element depends on all past picture elements, a single error appears in all remaining picture elements.[17,20] Because of the large amount of data transmitted for any picture, transmission errors could be a serious problem. Error recovery procedures in the transmission link might solve this problem.

2.2.5 Summary

In summary, it can be said that DPCM, like PCM, yields only very modest compression ratios; ratio of 2:1 appears to be the best that can be achieved. In addition, the picture degradation due to errors appears to be a serious drawback.

2.3 PCM USING FREQUENCY SEPARATION

Before going on to techniques which involve picture property detection, one other PCM technique should be mentioned. This consists of breaking down the scanned picture

signal into two or more component signals, each containing a particular band of frequencies. Then each component signal is sampled and quantized using a sampling rate and a number of quantization levels suitable to that band of frequencies. The sampling rate is generally equal to twice the highest frequency in the band. The criteria for determining the number of quantization levels for a given frequency band is based on the two properties of human vision mentioned previously. Bands containing the higher frequencies represent high-contrast, very detailed portions of the picture; therefore brightness amplitude can be coarsely quantized due to the eyes' insensitivity to brightness at such frequencies. Low-contrast regions of the picture are represented by the lower-frequency bands, to which the eyes' brightness sensitivity is high; consequently many quantization levels are needed. Kretzmer[23] took a 4MC television signal and passed it through a low-pass filter to get the "lows" component signal (0-0.5MC) which he sampled and quantized with 7 bits. The "lows"signal was subtracted from the original video to get the "highs" signal (0.5-4MC) which was quantized with 3 bits. The result was approximately a 2:1 compression ratio compared with straight 7-bit PCM. He also proposed another scheme using 7 bits for 0-0.5 MC, 4 bits for 0.5-1 MC, 3 bits for 1-2 MC and 2 bits for 2-4 MC. Results are not reported but the gain should have been less.

2.4 PROPERTY DETECTION AND ENCODING

The next few transmission techniques to be described are based primarily on the definition, detection, and encoding of certain picture details or properties.

2.4.1 Run-Length or Differential-Coordinate Encoding

The first of these is run-length encoding (also called differential-coordinate encoding). In this method, the picture property which is detected and encoded is a string of picture brightness samples which can all be assigned the same quantization level. The length of such a string or "run" is what is actually coded and transmitted. Some information about the quantization level must also be sent.

Michel [24,25] has reported some interesting results on run-length encoded black and white material (no intermediate grayness levels). The method involves transmitting code words which represent contiguous sequences of all black or all white sample points. Since the black or white run-lengths could be very large values (as in the case of an empty page) it is necessary to restrict the run-length values for which there are codes. This limits the length (in bits) and number of code words. Run lengths which exceed the maximum length for which there is a code word must be expressed in terms of two or more code words in sequence. Michel computed statistics concerning run lengths contained in 300-word pica typewritten copy. He used enlargements of the pica

letters to measure run lengths and then applied known results for the monogram, diagram, and trigram frequencies for English letters[25] to compute the run-length probabilities. Using Shannon-Fano encoding as modified by Huffman[27], Michel derived code words based on the derived probability distribution and found that the average code-word length (in bits) was within 1% of the entropy (in bits) of the run lengths. Correlation between run lengths was not taken into account. Michel's code had a prefix which preceded a run-length code word if it was a black run, otherwise all run lengths were assumed to be white, and each white run was assumed to terminate with one black dot. This pica-tailored code was used to encode a variety of data. Figure 1 gives some of his results.

The compression ratio for the 300-word pica letter is $R \approx \frac{10^6}{10^5} = 10$. This value seems low since the code is tailored to be optimum for this case. For the empty page $R \approx 180$. However, intuitively, 5,500 bits seems like an excessive amount of information to be associated with an empty page. The reason for this is that Michel felt that the average transmission which he would encounter would involve pica-style text and should therefore be tailored for that case, at the expense of efficiency in other cases. It is difficult to compare these compression ratios against a norm because it is difficult to measure the amount of information contained in a picture. In fact, as stated by Pearson[28],

Table I. Portion of Pica-Tailored Code

Item	Code Symbol
Black	00
2 dots	010
3 dots	011
4 dots	100
5 dots	1010
6 dots	1011
Margin (also empty line)	1000
7 dots	1001
1 dot	11010
8 dots	11011

Table II. Binary Digits per 8½- by 11-Inch Page

Type of Copy	Binary Digits
Empty page	8,500
Simple drawing, Fig. 8(B)	90,000
Grid with 2-inch spacing	90,000
300-word pica letter	100,000
Circuit schematic, Fig. 8(A)	130,000
Page filled with pica type	300,000
Grid with 1-millimeter spacing	600,000
Page filled with 8-point type	700,000
Two black and one white dot alternating horizontally	3,000,000

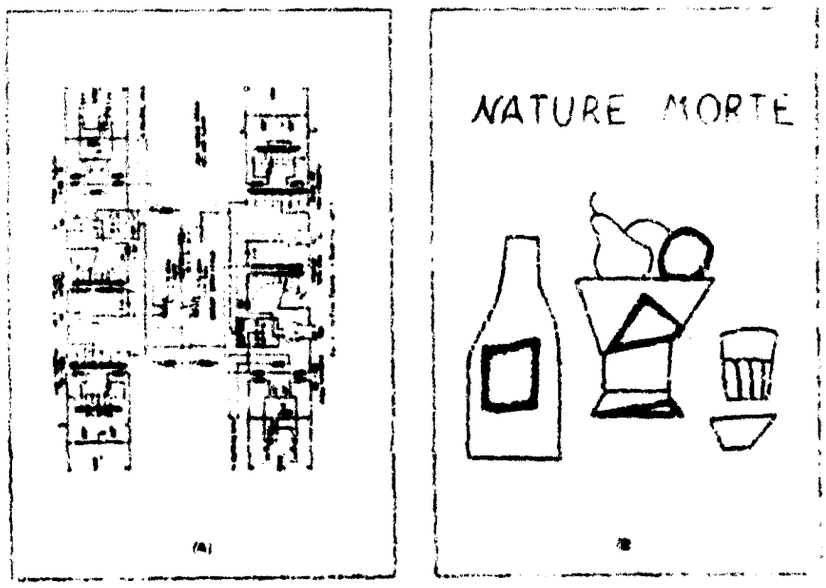

Fig. 8. Two types of drawings

A—Circuit schematic
B—Simple drawing, for which channel capacities are given in Table II.
Frames indicate size of 8½- by 11-inch sheet

Figure 1. Some Results of Michel's Run-Length Encoding[24]

the actual information present for transmission is a function of the process used to digitize the original picture. The higher the resolution used in the scanning process, the larger the amount of information present, up to a point. At even higher resolution the redundancy increases and the amount of information becomes constant (see Schreiber[11]). The results for the 300-word pica letter could be evaluated on the basis of Shannon's[29] results concerning the redundancy of English. The zeroth-order measure of average information per symbol (letters and spaces) in English text gives 4.76 bits per symbol. Assuming that the average English word has five letters and a space, then 300 words would contain an average amount of information equal to 8,568 bits. Some bits must be added to this to designate the format of the page such as margins, line spacing, paragraph indentation, etc. Let the total be 10,000 bits, then $R' \approx \frac{10^6}{10^4} = 100$, in contrast to Michel's value of $R \approx \frac{10^6}{10^5} = 10$ for the 300-word pica letter. If higher-order measures are used for English, such as 4.2 and 3.6 bits per symbol for the first- and second-order or the eight-order value of 2.4 bits per symbol, the difference between R and R' approaches 200 versus 10.

2.4.2 Restricted Run-Length Encoding

Another approach to run-length encoding was taken by Cherry, et al.[30,31] They analyzed the run-length statistics for some class of documents and attempted to find

an optimum set of standard run-lengths. Then any run-length was restricted to be one of the standard run-lengths. Long run-lengths were, in effect, broken down into a set of standard run-lengths. They were considering a situation in which the scanning, encoding, and transmission were all proceeding simultaneously. In this case, extremely long run-lengths could cause gaps in the transmission while the end of the run was being awaited; also transmission buffer overflow became possible when many very short runs occurred in succession. They performed a queueing theoretic analysis for the purpose of choosing standard run lengths, transmission rate, and buffer size so that the probabilities of buffer underflow and overflow were below a certain level.

The problem of transmission buffer underflow or overflow does not arise when the pictorial data are compressed and encoded off-line.

One of the real advantages of using standard run-lengths is that variable-length statistical coding becomes unnecessary. If the run-lengths are chosen properly they are uniformly distributed and can therefore be efficiently represented by a fixed-length code. The longest standard run places an upper limit on the compression ratio. This seems to be a disadvantage to using restricted run-length encoding. Robinson and Cherry[31] used standard run-lengths of 1,2,4,10 sample points and 7-bit brightness quantization.

Using various test pictures, they achieved compression ratios in the range of 3 to 6. Each run was specified by 9 bits: 7 bits for brightness quantization and 2 bits for run-length. If the entire picture consisted of runs equal to the maximum run-length of 10, then the compression ratio would be $\frac{nx7}{(m/10)x9} \simeq 7.8$, the maximum compression ratio possible using 1,2,4,10 as the standard run-lengths. The authors found that slight variations in the first three values did not significantly affect the results.

Run-lengths are found to have an exponential distribution function [30,32]. The probability that a run is of length n is $P(n)=Ar^{-n}$, and since $\sum_{n=0}^{\infty} P(n)=1$, then $A=r-1$ for $r>1$. Therefore, $P(n)=(r-1)r^{-n}$;and the average value of n, $\bar{n} = \sum_{n=0}^{\infty} nP(n)=r/r-1$. Now if a sample is sent only at the beginning of each run, neglecting run-length information, then the rate of sample generation will be decreased by the factor r/r-1, which is an upper bound on the compression ratio. The added bits to specify run-length make this bound impossible to achieve. Seyler [32] found that a run-length probability density function of the form $p(T)=\alpha e^{-\alpha T}$ was accurate for statistically stationary television signals having an exponential element auto-correlation function. His analysis led to the conclusion that a worst-case compression ratio of 5 was possible. He also looked at the

problem of choosing the maximum run-length value such that the bit rate would be a minimum, for various values of α. Wyle[33] et al. measured run-length statistics and devised a coding scheme which makes it possible to begin reproducing a run before the entire run-length has been received. They report an average compression ratio of 4 for black and white pictures and 2.9 for continuous-tone pictures. The maximum ratio was 8.5. Golomb[34] looked at the problem of finding an optimum variable-length statistical code when the run-length distribution function is of a particular form. He found a general form for the code corresponding to the general geometric distribution $p^n q$. His code can be encoded and decoded using a brief algorithm rather than an infinite code book. Kubba[35] and Sekey[36] have studied the problem of optimum detail detection for the determination of run lengths in noisy pictures. They use the theory of statistical inferential estimation to find $\log (H_n/H_{n+1})$ which indicates the preference for H_n versus H_{n+1} where, H_n is the hypothesis: x_n and x_{n+1} are independent so x_{n+1} starts a new run; and H_{n+1} is the hypothesis: x_{n+1} is part of a run already in progress. x_n and x_{n+1} are neighboring picture brightness samples.

In summary, run-length encoding seems to be capable of providing compression ratios between 5 and 10, with some very simple pictures giving ratios as high as 20 (see Michel's "Nature Morte," Fig.1). Variable-length statistical coding

seems necessary to achieve ratios as high as 10, but the standard runs method results in ratios not too much less and is more easily implemented.

Another method used to detect changes in picture brightness, and the position of those changes, is described by Gouriet[37]. His method involves converting the analog picture signal to a staircase-like quantized signal which is then differentiated, giving a signal consisting of positive and negative pulses corresponding to positions in the quantized signal, where there are positive or negative steps, respectively. These "position pulses" are then rectified and used to drive a ramp function generator. Each pulse resets the generator to zero output, so that the composite output is a "sawtooth" where each "tooth" begins and ends at times corresponding to "position pulses," and the amplitude of each "tooth" is proportional to the distance between the pulses. Now the "sawtooth" signal is differentiated, yielding pulses whose position has no significance but whose amplitude is a measure of the distance between successive changes in brightness. This stream of "distance pulses" could then be transmitted at a regular rate over an analog channel. Another signal must also be sent consisting of brightness samples corresponding to points in the video signal where the changes in brightness occur. The "position pulse" stream could be used to derive the

brightness samples. Gouriet found that the combined entropy of the distance and brightness signals was smaller, by a factor of seven, than the picture entropy in the case where picture elements in a scan line are assumed to be independent.

Newell and Geddes[38], in testing Gouriet's technique, found that for a raster having 180 lines and 500 elements per scan line, the average frame had 7000 brightness changes with the maximum being 12,000; most scan lines had more than 50. These results were based on 6-bit brightness quantization. When 13 nonuniformly spaced grayness levels were used, the average was 12,000 brightness changes. In both cases 12 pictures were tested. An unrestricted distance signal was found to require an extremely high signal-to-noise ratio, and it was necessary to restrict the distance signal to a maximum of 20 picture elements between brightness changes. They concluded that a practical bandwidth reduction factor of 3.1 seemed possible.

2.4.3 Dual Mode and Edge Detection Systems

Schreiber and Knapp[39] experimented with a dual mode system which transmitted a low frequency or "lows" # signal using ordinary PCM. The "highs" signal was run-length encoded using 3 bits for brightness quantization and 5 bits for run length. The compression ratio achieved was estimated to be 4:1. Newell and Geddes[38] tested a similar system

using Gouriet's[37] analog technique for run-length transmission and found that a bandwidth reduction of 3:1 was practical. They also tested the "synthetic highs" technique of Schreiber et al.[40]. This method is based on the detection of brightness "edges" in a scan line. The "lows" signal is separated using a low-pass filter and is transmitted separately using PCM or reduced bandwidth analog transmission. The highs signal is derived by differentiating the original signal and, by means of very few quantization levels, replacing the derived signal by pulses whose height and duration are determined by the portion of the signal within a given quantization level. The minimum quantization level is chosen so that the low-frequency contribution to the derivative is ignored. These pulses are then transmitted in analog fashion or are run-length encoded by transmitting the distance between pulses and the discrete pulse height. At the receiving end the pulses are passed through a specially designed transversal filter which synthesizes a "highs" signal which is recombined with the "lows" to give the reproduced picture (see Fig.2). The "synthetic highs" technique gave qualitatively better pictures than the quantized highs method with generally the same noise and bandwidth requirements.

Julesz[41] has investigated a technique which combines a type of run-length encoding at the transmitter with linear interpolation at the receiver. The beginning of a run is

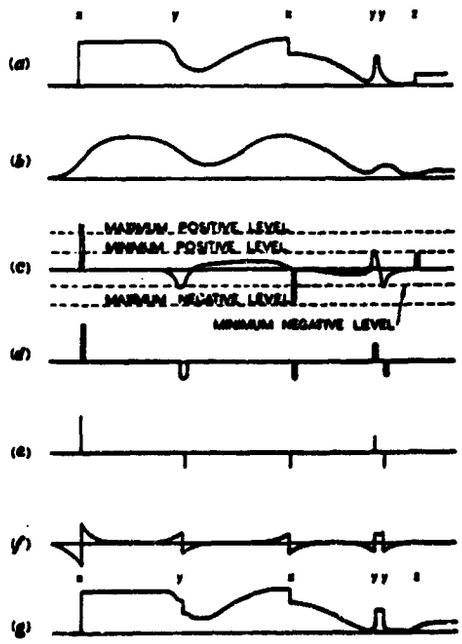

Figure 2. Waveforms of the Synthetic-Highs System[38]

(a) Video input.

(b) 'Lows'.

(c) Derivative of video input.

(d) Quantized derivative.

(e) Brightness pulses for 'highs' after decoding at receiver.

(f) 'Synthetic highs'.

(g) Final waveform, (b) + (f).

based on the detection of an edge or abrupt change in brightness on a scan line. These edges are detected by comparing the differences in brightness of adjacent pairs of unquantized brightness samples using the differences $u_{i-1}-u_{i-2}$ and u_i-u_{i-1}, where u_i is a brightness sample at the i-th sample point and u_{i-1}, u_{i-2} are the two previous samples on one side of u_i. An ε is used to assign an index to difference functions in the following way: if $u_{i-1}-u_{i-2}>\varepsilon_1$, the index equals +1; if $|u_{i-1}-u_{i-2}|<\varepsilon_1$ the index equals 0; if $u_{i-1}-u_{i-2}<-\varepsilon_1$, the index equals -1. This leads to the following types of brightness changes and associated index pairs: (0,1), (1,0), (1,1), (0,-1), (-1,0), (-1,-1), (1,-1), (-1,1). If any of these changes should occur, except for the (1,1) or (-1,-1) case, a new run is begun and the old run is terminated, quantized, and sent along with a quantized version of u_i at that point. For practical considerations, 16 Nyquist intervals was the maximum allowed run-length, so 4 bits were required. Ten bits were used for brightness quantization (6 bits would have been sufficient) except when the change was within ±2 Nyquist intervals of the last change, then coarser 4-bit quantization was used. This takes advantage of the eye's insensitivity to brightness accuracy in a region of rapid change, a property of human vision mentioned earlier at the receiver, linear interpolation is used

to reconstruct the signal across a run-length between two edges.

There were some problems with this scheme. If ε_1 was too small, misalignment of edges from one scan line to the next resulted. If ε_1 was too large, detail was lost. Therefore an ε_1 (small) and an ε_2 (large) were chosen, and the union of the two sets of edge points was used. Another problem was that for gradual changes in brightness an error would build-up over long intervals, because only adjacent differences are compared. This was solved by monitoring the difference between the original and coded picture and taking extra samples if the difference exceeded a tolerance ε_3 (and the distance to the next edge was greater than 2 Nyguist intervals). Two sets of criteria tested were ε_1=3.6%, ε_2=10%, ε_3=5% and ε_1=5%, ε_2=10%, ε_3=7.2%. Four basically different test scenes were used. The minimum average ratio of edge points to total raster points was 31.5%, with 42.4% being the maximum and 25.3% being the minimum for one scene. Fifty-six per cent, 72%, and 44% are the average, maximum, and minimum ratios, respectively, of coarsely quantized samples to selected samples. Statistics were also computed for run lengths between edges. For one of the scenes, less than 10% of the run lengths exceeded 16 Nyguist intervals and, therefore, required additional samples. These statistics were used to compute the entropy in bits per sample in order to estimate the results of

statistical encoding. The average, maximum, and minimum entropy was 2.35, 2.80, and 2.01, respectively, giving an average compression ratio of 2.9 compared to 7-bit PCM. The statistical encoding in this case takes into account only the run-length statistics and not the brightness-level statistics. A more practical fixed-length non-statistical code would give an average compression ratio of 2.4.

Julesz found that if any of the scenes were coded with a statistical code tailored for any other scene the results were only slightly different from the results when a scene was coded with its own code. This is important because in a practical system the same code would have to be used for all scenes. It should be noted that Julesz used 1/25 of the normal resolution, and therefore much higher compression ratios could be expected with his scheme using finer resolution. However, the restriction on his run lengths to 16 Nyguist intervals limits his maximum compression ratio to 9.6 for non-statistical encoding.

Gabor and Hill[42] have described a method which involves detecting edges of brightness on alternate scan lines and, using linear interpolation, derives the edges for the scan line in between. This could result in sending half as many edge samples but seems to call for a much more complex receiver.

2.4.4 Contour Detection and Encoding

Consider the following assumptions: (1) the human eye responds most to edges of brightness and, in fact, emphasizes them; (2) sharp edges of brightness are relatively few in an average picture and they lie along connected contours; (3) less accurate reproduction of the low-frequency, low-contrast portions of a picture will not be noticeable. These assumptions were used by Pan[43] and Graham[44] as the basis for a dual mode picture transmission technique which is a two-dimensional extension of the edge-detection method of Schreiber, Knapp, and Kay[40]. A two-dimensional low-pass filter is used to form an image resembling an out-of-focus version of the original picture which is then transmitted using ordinary 6-bit PCM and a much coarser sampling rate. In order to detect the edges of brightness the original picture is operated upon using a function which will emphasize abrupt changes in two dimensions. Either the gradient or the Laplacian operator can be used for this purpose. A nonlinear thresholding operation is performed on the resulting image to detect the presence of contours. Once a potential contour point is detected, neighboring points are examined in order to trace out the entire contour. Extremely short contours are rejected and are assumed to be the result of noise in the original picture. Each contour found is encoded and

transmitted to the receiver. To reconstruct the original picture at the receiver, a two-dimensional transversal filter is applied to the image containing the thin line contours, synthesizing a "highs" signal, which, when combined with the "lows" signal, gives the desired result. The characteristics of this transversal filter are a function of the low-pass filter and the edge-detection operator.[45] This becomes apparent in the one-dimensional case where the edge is the step function shown in Fig. 3; the low-pass filter gives 3(b) and the gradient gives 3(c). Therefore, the transversal filter's response to 3(c) is constrained to be something like 3(d) in order that 3(b) and 3(d) will sum to 3(a).

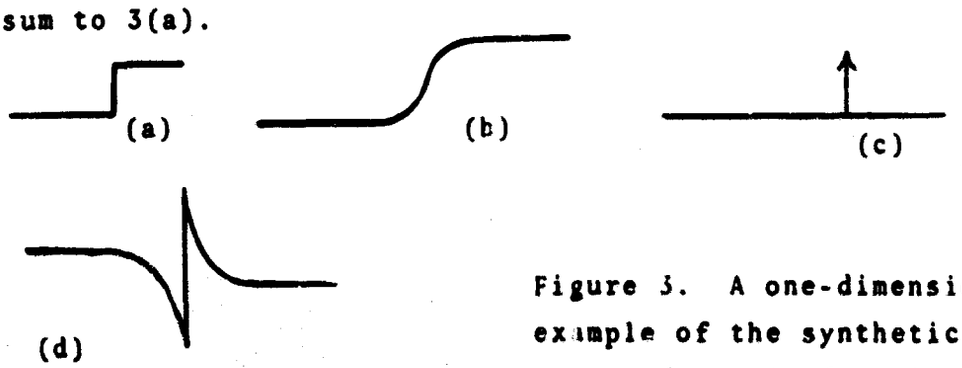

Figure 3. A one-dimensional example of the synthetic "highs" system for step function input[44]

Graham performed a computer simulation of this technique using a 256x256-element picture representation and 8-bit brightness quantization. A two-dimensional low-pass filter in difference equation form was used to determine the "lows" image, which was transmitted using 6-bit PCM and a 32x32 sampling matrix giving 3000-6000 bits. Both the gradient

and Laplacian methods were used for edge detection, and transversal filters were derived for both cases. For one of the test pictures the gradient yielded 11,886 edge points while the Laplacian gave 26,119; the same threshold was used in both cases. Results for three other test pictures using the gradient are summarized in Table 1. The beginning of a contour was coded as follows:

Table I

Contour Coding Data for Figures 16, 17, and 18[44]

	Fig. 16	Fig. 17	Fig. 18
Number of edge points	8900	13,980	2301
Number of contours	263	485	55
Number of bits for:			
VDC	20,300	38,400	5,900
GDC	17,400	30,600	4,260
GMC	11,200	18,900	2,880
start point	6,312	11,640	1,320
lows	3,000	3,000	3,000
Total number of bits	58,212	102,540	17,360
Reduction factor	6.75	3.8	22.7

16 bits were used to designate a contour starting location, 3 bits designate the direction of the gradient, 2 bits are

for the gradient magnitude, and 3 bits designate the contour direction, making 24 bits total. A variable-length Huffman code is used to designate the following elements of contour continuation: contour vector direction change (VDC) which is integral multiples of 45°, $-3 \leq VDC \leq 3$; gradient direction change (GDC) which has the same values as VDC; and gradient magnitude change (GMC) which has values $0 \leq GMC \leq 4$. The end-of-contour symbol is an eighth value for VDC. The four test pictures required, on the average, 5.8 bits per contour-continuation point. A fixed-length non-statistical code would have required 9 bits.

The compression ratios achieved by contour encoding (see Table I) were generally higher than those which would be expected if previously described methods were applied to the same pictures. In addition, this method is not inherently limited in its maximum compression ratio as is restricted run-length encoding. Therefore, increased resolution should give a larger proportional increase in compression ratio. If the 256x256 sampling matrix were replaced by a 512x512 matrix, the number of samples would increase by a factor of 4, but the number of edge points would be expected only to double; therefore the compression ratios would be expected to at least double. There seem to be two disadvantages associated with this scheme. One is the amount of processing time required for each picture. Simulation processing times for a single picture

were on the order of 5 minutes, using an IBM 7094II. The digitized pictures were recorded on digital magnetic tape. Optical filtering might help but would still leave the processing time required for contour detection, tracing, and encoding, and perhaps contour reconstruction. The other disadvantage is the sensitivity to transmission errors. Since a contour continuation message contains information only about changes in contour properties, an error in one contour continuation symbol would cause the remaining portion of that contour to be reconstructed improperly.

Cheydleur[46] has proposed a scheme for the coding of contours and lines of varying width. It is based on the use of compactly coded syllables which specify such things as contour location and contour alteration. A contour location syllable specifies the beginning of a new contour. It is followed by sub-syllables which specify its horizontal displacement relative to another contour, the slope of the left contour boundary, the rate of change of the slope, the width of the contour, and the rate of change of the width. There is also a sub-syllable which specifies the vertical displacement to the position where there is a change in any of the previously mentioned sub-syllables. The values of the changes are specified by the sub-syllables of a contour alteration syllable. Pictures with grayness levels are coded by replacing the width sub-syllable by one that specifies grayness value to the left of the contour.

As yet, no experiments have been performed to evaluate this technique.

2.4.5 Area Encoding

A method described by Cunningham[47] involves replacing every n x n area of the picture by the average brightness in that area. The intermediate values are determined at the receiver by means of interpolation. In addition, at the transmitter, the interpolated values are compared to the true values, and a pair of criteria are used to determine whether special correction symbols need to be sent. Averaging over a 3x3 area gave good quality pictures and a compression ratio of 6:1; 5x5 averaging gave poor quality pictures and a compression ratio of around 9:1. A modified correction scheme applied to 5x5 averaging brought the quality up and the ratio down to that of 3x3 averaging.

An encoding technique based on area-dependent statistics was investigated by Wholey.[48] He selected the 12-element pattern shown in Fig. 4 and analyzed several pictures of a given class (weather maps) for the statistical relationship between the value of P and the various combinations of values for the 12 x's.

$$x_1 \; x_2 \; x_3 \; x_4 \; x_5$$

$$x_6 \; x_7 \; x_8 \; x_9 \; x_{10}$$

$$x_{11} x_{12} P$$

Fig. 4 12-element statistical encoding pattern.

Only black and white pictures were considered. These statistics were used to predict the most probable value for P, given value assignments for the 12 x's. A particular picture is processed by scanning the pattern across it and making a prediction for P at every sample point. The picture is assumed to have a white border two elements wide. For each sample point at which a wrong prediction is made, a 1 is placed in the corresponding position in an error matrix. The resulting error matrix is a complete representation of the picture, which is then transmitted using statistical run-length encoding. For ten 7000-element weather maps the average error matrix had 5.5% 1's and the average compression ratio was 2.6:1. The entropy of the average error matrix was

$$H=-[0.055 \log_2 0.055+0.945 \log_2 0.945]=0.31,$$

which gives a compression ratio of 3.2:1 ideally. When various picture processing techniques were applied to the pictures, which gave a straight-line approximation to the weather maps, the compression ratios increased to about 7.7:1.

In order to achieve large compression ratios with area encoding it is necessary that the areas themselves be large and also that the number of possible combinations of brightness within the areas be small or highly non-uniform in their probability distribution. These properties seem

self-contradictory and do not agree with statistics which have been compiled.[49]

2.5 COMPRESSION TECHNIQUES USING PICTURE TRANSFORMATION

Previous methods which have been described generally involve operations which attempt to extract and encode the essential information by operating on the original picture. It would be desirable to find a suitable transformation which, when applied to the original picture, yields an image containing the essential information in a more convenient form. A suitable transformation would preserve the information content in the original picture and would be reversible. Andrews and Pratt[50] have performed experiments in television bandwidth reduction using the finite two-dimensional Fourier transformation. This transform is a linear invertible one-to-one mapping. In addition, Andrews[51] proved that the Fourier transform is an information-preserving mapping. In general, the entropy of a function and its linear inverse are identical.

Andrews and Pratt used an original image containing 256x256 elements quantized to 64 levels of grayness. A digital computer was used to calculate the two-dimensional Fourier transform of the original image, using a highly efficient version of the Cooley-Tukey algorithm.[52] The Fourier image is then processed and transmitted. At the receiver, a second two-dimensional Fourier transform is performed to

obtain the original image. They have found that the double Fourier transform of a picture does not significantly degrade the quality of the reproduced picture. In addition, the Fourier image has the following interesting properties: most of the "information" lies along the coordinate axes and near the origin at low spatial frequencies; and the samples exhibit a greater degree of statistical regularity than do image domain samples. The authors used two methods to decrease the amount of information transmitted for the Fourier image. One method used a binary mask to blank out certain low-amplitude spatial frequencies. A second, more sophisticated method, is based on the fact that the energy contained in an image is the same in the spatial and Fourier domains. Therefore, the lowest spatial frequencies are generated and sent first, and as more spatial frequencies are sent the cumulative energy is computed. When the energy reaches the total energy, within some tolerance, transmission is terminated. The resulting number of Fourier image samples transmitted is a small fraction of the total. Gaussian 64-level quantization was used because linear quantization was found to be inadaquate.

A reproduced picture with a compression ratio of 4:1 was very much like the original. Another picture compressed by a factor of 36 was quite blurred and unsatisfactory. Future work with this technique will be directed toward the

application of spatial domain data-compression techniques, like predictive and interpolative coding, to the Fourier domain.

REFERENCES

1. Deloraine, E.M., and Reeves, A.H., "The 25th Anniversary of Pulse Code Modulation," IEEE Spectrum, Vol.2, No.5, May 1965, pp. 56-63.

2. Huang, T.S., "PCM Picture Transmission," IEEE Spectrum, Vol.2, No.12, December 1965, pp. 57-63.

3. Horowitz, I., Synthesis of Feedback Systems, Academic Press, New York, 1963, p. 596.

4. Carbrey, R.L., "Video Transmission over Telephone Cable Pairs by Pulse Code Modulation," Proc. IRE, Vol.48, September 1960, pp. 1546-1561.

5. Goodall, W.M., "Television by Pulse Code Modulation," Bell Systems Technical Journal, Vol.30, January 1951, pp. 33-49.

6. Huang, T.S., Tretiak, O.J., Prasada, B., and Yamaguchi, Y., "Design Considerations in PCM Transmission of Low Resolution Monochrome Still Pictures," Proc. IEEE, Vol.55, No.3, March 1967, pp. 331-335.

7. Oliver, B.M., Pierce, J.R., and Shannon, C.E., "The Philosophy of PCM," Proc. IRE, Vol.36, November 1948, pp. 1324-1331.

8. Brainard, R.C., "Subjective Evaluation of PCM Noise-Feedback Coder for Television," Proc. IEEE, Vol.55, No.3, March 1967, pp. 346-353.

9. Bruce, R.A., "Optimum Pre-emphasis and De-emphasis Networks for Transmission of Television by PCM," IEEE Trans. on Communications Technology, Vol. COM-12, September 1964, pp. 91-96.

10. Peterson, D.P., and Middleton, D., "Sampling and Reconstruction of Wave-Number-Limited Functions in n-Dimensional Euclidean Spaces," Information and Control, Vol.5, 1962, pp. 279-323.

11. Schreiber, W.F., "Picture Coding," Proc. IEEE, Vol.55, No.3, March 1967, pp. 320-330.

12. Schreiber, W.F., "The Measurement of Third-Order Probability Distribution of Television Signals," Trans. IRE, Vol. IT-2, September 1956, pp. 94-105.

13. Schreiber, W.F., "Probability Distributions of Television Signals," Ph. D. thesis, Harvard University, 1953; IRE Convention Record, 1953, Part 4, p. 35.

14. Roberts, L.G., "Picture Coding Using Pseudo-random Noise," IRE Trans. on Information Theory, Vol. IT-8, February 1962, pp. 145-154.

15. Kretzmer, E.R., "Statistics of Television Signals," Bell Systems Technical Journal, Vol.31, July 1952, pp.751-763.

16. Harrison, C.W., "Experiments with Linear Prediction in Television," Bell Systems Technical Journal, Vol. 31, 1952, p. 764.

17. O'Neal, J.B., "Predictive Quantizing Systems for the Transmission of TV Signals," Bell Systems Technical Journal, Vol.45, May-June 1966, pp. 689-722.

18. Graham, R.E., "Predictive Quantizing of Television Signals," IRE WESCON Convention Record (Electronic Computers), August 1958, p. 147.

19. Oliver, B.M., "Efficient Coding," Bell Systems Technical Journal, Vol. 31, No.4, July 1952, pp. 724-750.

20. O'Neal, J.B., "Deltamodulation Quantizing Noise Analytical and Computer Simulation Results for Gaussian and TV Input

Signals," Bell Systems Technical Journal, Vol.45, January 1966, pp. 117-142.

21. Graham, R.E., "Subjective Experiments in Visual Communications," IRE National Convention Record, Vol.6, Part 4, 1958, pp. 100-106.

22. Powers, K.H., and Staras, H., "Some Relations between Television Picture Redundancy and Bandwidth Requirements," Trans. AIEE, Vol.76, Part 1, 1957, pp. 492-496.

23. Kretzmer, E.R., "Reduced Alphabet Representation of Television Signals," IRE Convention Record, Part 4, 1956, p. 140.

24. Michel, W.S., "Statistical Encoding for Text and Picture Communication," AIEE Conference Paper, CP 57-723, May 1, 1957 (published in March 1958).

25. Michel, W.S., et al., "A Coded Facsimile System," IRE WESCON Convention Record, Part 2, 1957, p. 84.

26. Pratt, F., Secret and Urgent, Blue Ribbon Books, New York, 1939.

27. Huffman, D.A., "A Method for the Construction of Minimum-Redundancy Codes," Proc. IRE, Vol. 40, No.9, September 1952, pp. 1098-1101.

28. Pearson, D.E., "A Realistic Model for Visual Communications Systems," Proc. IEEE, Vol.55, No.3, March 1967, pp. 380-389; also Ph.D. thesis, University of London, England, 1965.

29. Shannon, C.E., "Prediction and Entropy of Printed English," Bell Systems Technical Journal, Vol.30, January 1951, pp. 50-64.

30. Cherry, C., Kubba, M.H., Pearson, D.E., and Barton, M.P., "An Experimental Study of the Possible Bandwidth Compression of Visual Image Signals," Proc. IEEE, Vol.51.

November 1963, pp. 1507-1517.

31. Robinson, A.H., and Cherry, C., "Results of a Prototype Television Bandwidth Compression Scheme," Proc. IEEE, Vol.55, No.3, March 1967, pp. 356-363.

32. Seyler, A.J., "The Coding of Visual Signals to Reduce Channel Capacity Requirements," Proc. IEE (London), Vol. 109, Part C, July 1962, pp. 676-684.

33. Wyle, H., Erb, T., and Banow, R. "Reduced-Time Facsimile Transmission by Digital Coding," IRE Transactions on Communications Systems, Vol. CS-9, September 1961, pp. 215-222.

34. Golomb, S.W., "Run-Length Encodings", IEEE Transactions on Information Theory, Vol. IT-13, No.4, July 1966, pp. 399-401 (correspondence).

35. Kubba, M.H., "Automatic Picture Detail Detection in the Presence of Random Noise," Proc. IEEE, Vol.51, November 1963, pp. 1517-1523.

36. Sekey, A., "Detail Detection in Television Signals," Proc. IEEE, Vol.53, January 1965, pp. 75-76 (Correspondance).

37. Gouriet, G.G., "Bandwidth Compression of a Television Signal," Proc. IEE, Paper No. 2357R, 104B, May 1957, p. 265.

38. Newell, G.F., and Geddes, W.K.E., "Tests of Three Systems of Bandwidth Compression of Television Signals," Proc. IEE (London), Vol. 109, Part B, July 1961, pp, 311-323.

39. Schreiber, W.J., and Knapp, C.F., "TV Bandwidth Reduction by Digital Coding," IRE Convention Record (Information Theory), 1958, pp. 88-99.

40. Schreiber, W.F., Knapp, C.F., and Kay, N.D., "Synthetic

Highs, an Experimental TV Bandwidth Reduction System," Journal of the Society of Motion Picture and TV Engineers, Vol.68, August 1959, pp. 525-537.

41. Julesz, B., "A Method of Coding Television Signals Based on Edge Detection," Bell Systems Technical Journal, Vol. 38, July 1959, pp. 1001-1020.

42. Gabor, D., and Hill, P.C.J., "Television Band Compression by Contour Interpolation," Proc. IEE (London), Vol. 108, Part B, No. 39, 1961, p. 303.

43. Pan, J., "Reduction of Information Redundancy in Pictures," Sc.D. dissertation, Department of Electrical Engineering, Massachusetts Institute of Technology, Cambridge, September 1962.

44. Graham, D.N., "Image Transmission by Two-dimensional Contour Coding," Proc. IEEE, Vol.55, No.3, March 1967, pp. 336-346.

45. Schreiber, W.F., "The Mathematical Foundation of the Synthetic Highs System," Quarterly Report 68, Research Laboratory of Electronics, Massachusetts Institute of Technology, Cambridge, January 1963, p. 140.

46. Cheydleur, B. F., "Compressed Code," Private correspondence.

47. Cunningham, J.E., "Picture Processing," Quarterly Progress Report No. 54, Research Laboratory for Electronics, Massachusetts Institute of Technology, Cambridge, 1959, p. 138.

48. Wholey, J.S., "The Coding of Pictorial Data," IRE Transactions on Information Theory, Vol. IT-7, April 1961, pp. 99-104.

49. Nishikawa, S., et al., "Area Properties of Television Pictures," IEEE Transactions on Information Theory, Vol. IT-11, No.3, July 1965, pp. 348-352.

50 Andrews, H.C., and Pratt, W.K., "Television Bandwidth Reduction by Fourier Image Coding," Preprint No. 103-91, 103rd Technical Conference, Society of Motion Picture and Television Engineers, May 1968.

51. Andrews, H.C., "Entropy Considerations in the Frequency Domain," Proceedings of the IEEE, Vol. 65, No.1, January 1968, pp. 113-114 (letter).

52. Andrews, H., "A High-Speed Algorithm for the Computer Generation of Fourier Transforms," IEEE Transactions on Computers, Vol.C-17, No.4, April 1968, pp. 373-375.

53. Pratt, W.K., "A Bibliography on Television Bandwidth Reduction Studies, IEEE Transactions on Information Theory, Vol. IT-13, No.1, January 1967, pp. 114-115.

54. Cherry, E.C., and Gouriet, G.G., "Some Possibilities for the Compression of Television Signals by Recoding," Proc. IEE, Paper No. 1401R, January 1953, Vol. 100, Part 3, p. 9.

55 Kirsch, R.A., Cahn, L., Ray, C., and Urban, G.H., "Experiments in Processing Pictorial Information with a Digital Computer," Proc EJCC, 1957, pp 221-229.

56 Foy, W.H., Jr., "Entropy of Simple Line Drawings," IEEE Transactions on Information Theory, Vol. IT-10, April 1964, pp 165-167 (correspondence).

57. Freeman, H., "On the Encoding of Arbitrary Geometric Configurations," IRE Transactions on Electronic Computers, Vol.EC-10, No.2, June 1961, pp. 260-268.

58. Grossman, M., "On the Nature of Information: An Application of Entropy," IEEE Spectrum, Vol.2, No.12, December 1965, pp. 70-80.

59. Kirsch, R.A., "Computer Interpretation of English Text and Picture Pattern," IEEE Transactions on Electronic

Computers, Vol. EC-13, No.4, August 1964, pp. 363-376.

60. Kovansznay, L.S.G., and Joseph, H.M., "Image Processing," Proc. IRE, Vol.43, No.5, May 1955, pp. 560-570.

61. Mertz, P., and Gray, J., "A Theory of Scanning," Bell Systems Technical Journal, Vol.13, 1934, pp. 464-515.

62. Montgomery, W.D., "Reconstruction of Pictures from Scanned Records," IEEE Transactions on Information Theory, Vol. IT-11, No.2, April 1965, pp. 204-206.

63. Nagy, G., "Preliminary Investigation of Techniques for Automated Reading of Unformatted Text," Comm. ACM, Vol. 11, No.7, July 1968, pp. 480-487.

64. Nyquist, H., "Certain Topics in Telegraph Transmission Theory," Trans. AIEE, Vol. 47, April 1928, pp. 617-644.

65. Russell, J.K., "A Visual Image Processor," IEEE Transactions on Computers, Vol. C-17, No.7, July 1968, pp. 635-639.

66. Sekey, A., "Communications at Maximum Rate without Error Correction," IEEE Transactions on Information Theory, Vol. IT-10, October 1964, p. 381 (correspondence).

67. Unger, S.H., "Pattern Detection and Recognition," Proc. IRE, Vol 47, No.10, October 1959, pp. 1737-1752.

68. Capon, J., "Bounds to the Entropy of Television Signals," Technical Report 296, Research Laboratory of Electronics, Massachusetts Institute of Technology, Cambridge, 1955.

69. Deutsch, S., "A Note on Some Statistics Concerning Typewritten or Printed Material," IRE Transactions on Information Theory, Vol. IT-3, June 1957, pp. 147-148.

70. Elias, P., "Predictive Coding", IRE Transactions on Information Theory, Vol. IT-1, March 1955, pp. 16-33.

71. Graham, R.E., "Communications Theory Applied to Television Coding," Proc. International Symposium on Physical Problems of Color TV, ACTA Electronics, Vol. 2, 1957-58.

72. Laemwel, A.E., "Coding Processes for Bandwidth Reduction in Picture Transmission," Report R-246-51, PIB-187, Microwave Research Inst., Polytechnic Institute of Brooklyn, N.Y., August 1951.

73. Loeb, J., "Communications Theory of the Transmission of Simple Line Drawings," Communications Theory, ed. Willis and Jackson, Butterworth Scientific Publications, London, 1953, pp. 323-325.

74. Powers, K.H., "Prediction Theory Approach to Information Rates," IRE Convention Record, Part 4, 1956, pp. 132-139.

75. Shannon, C.E., "Coding Theorems for a Discrete Source with a Fidelity Criterion," in Information and Decision Processes, ed. R.E. Machol, McGraw-Hill, New York, 1960, pp. 93-126.

76. Stoddard, J.C., "Measurement of Second-Order Probability Distributions of Pictures by Digital Means," Technical Report No. 302, Research Laboratory for Electronics, Massachusetts Institute of Technology, Cambridge, 1955.

77. Swerling, P., "Statistical Properties of the Contours of Random Surfaces," IRE Transactions on Information Theory, Vol. IT-8, July 1962, pp. 315-321.

78. Youngblood, W.A., "Picture Processing," Quarterly Progress Report 48, Research Laboratory for Electronics, Massachusetts Institute of Technology, Cambridge, 1958, pp. 95-100.

79. O'Neal, J.B. Jr., "A Bound on Signal-to-Quantizing Noise Ratios for Digital Encoding Systems," Proc. IEEE, Vol.55, No. 3, March 1967, pp. 287-292.

80. Graham, R.E., "Snow Removal: A Noise-Stripping Process for Picture Signals," IRE Transactions on Information Theory, Vol. IT-8, February 1962, pp. 129-144.

81. Oppenheim, A.V., Schafer, R.W., and Stockman, T.G., Jr., "Nonlinear Filtering of Multiplied and Convolved Signals," Proc. IEEE, Vol. 56, No. 8, August 1968, pp.1264-1290.

82. Limb, J.O., "Source-Receiver Encoding of Television Signals," Proc. IEEE, Vol. 55, No.3, March 1967, pp.364-379.

83. Schroeder, M.R., "Images from Computers and Microfilm Plotters," Comm. ACM, Vol.12, No.2, February 1969, pp. 95-101.

UNCLASSIFIED
Security Classification

DOCUMENT CONTROL DATA - R & D

(Security classification of title, body of abstract and indexing annotation must be entered when the overall report is classified)

1. ORIGINATING ACTIVITY *(Corporate author)* THE UNIVERSITY OF MICHIGAN CONCOMP PROJECT	2a. REPORT SECURITY CLASSIFICATION Unclassified 2b. GROUP

3. REPORT TITLE

A SURVEY OF PICTORIAL DATA-COMPRESSION TECHNIQUES

4. DESCRIPTIVE NOTES *(Type of report and inclusive dates)*
Technical Report 16

5. AUTHOR(S) *(First name, middle initial, last name)*

J. DIGIUSEPPE

6. REPORT DATE March, 1969	7a. TOTAL NO. OF PAGES 55	7b. NO. OF REFS 83
8a. CONTRACT OR GRANT NO. DA-49-083 OSA 3050 b. PROJECT NO. c. d.	9a. ORIGINATOR'S REPORT NUMBER(S) Technical Report 16 9b. OTHER REPORT NO(S) *(Any other numbers that may be assigned this report)*	

10. DISTRIBUTION STATEMENT

Qualified requesters may obtain copies of this report from DDC

11. SUPPLEMENTARY NOTES	12. SPONSORING MILITARY ACTIVITY Advanced Research Projects Agency

13. ABSTRACT

The results of a survey of pictorial data-compression techniques are summarized in this report. The survey was motivated by a study of half-time graphics communication over voice grade lines. The principal compression techniques surveyed include the following: the optimization of the parameters of ordinary pulse coded modulation, pulse coded modulation using added pseudo-random noise, differential pulse coded modulation, predictive differential pulse coded modulation, run-length encoding, brightness edge detection and the use of "synthetic highs," brightness contour detection and encoding, area encoding, picture compression in the Fourier domain.

DD FORM 1 NOV 65 1473

Unclassified
Security Classification

KEY WORDS	LINK A ROLE	LINK A WT	LINK B ROLE	LINK B WT	LINK C ROLE	LINK C WT
picture,						
compression,						
compression ratio,						
encoding,						
statistical,						
transmission,						
quantization,						
entropy,						
run-length,						
contour,						
Fourier,						