ATD Report 69-54 18 June 1969

Surveys of Foreign Scientific and Technical Literature

COMMUNIST–BLOC METEOROLOGICAL SYSTEMS AND SENSORS

AD 689767

Lee Boylan

D D C
RECEIVED
JUL 1 9 1969
B

Distribution of this Document is Unlimited. It may be released to the Clearinghouse, Department of Commerce, for sale to the General Public.

Aerospace Technology Division
Library of Congress

Best Available Copy

90

ATD Report 69-54

18 June 1969

Surveys of Foreign Scientific and Technical Literature

COMMUNIST-BLOC METEOROLOGICAL SYSTEMS AND SENSORS

Work Assignment No. N-69-4

Distribution of this document is unlimited. It may be released to the Clearinghouse, Department of Commerce, for sale to the General Public.

The publication of this report does not constitute approval by any U. S. Government organization of the inferences, findings, and conclusions contained herein. It is published solely for the exchange and stimulation of ideas.

Aerospace Technology Division
Library of Congress

Best Available Copy

FOREWORD

The present compilation of abstracts is the third in a series devoted to the study of Soviet-bloc weather systems and sensors. The report is divided into four major parts. Part I contains material that is directly pertinent to automatic weather stations and their components. Part II covers the handling of weather information prior to computer input. Part III reviews weather data input and processing.

In Part IV, the material is limited strictly to instruments and sensor systems or their components. These are arranged in functional groupings and include instruments or sensors used to measure the following: wind, cloud height, temperature, precipitation (by radar), visibility, pressure, humidity, and water level. One section in Part IV is devoted to miscellaneous instruments.

Best Available Copy

TABLE OF CONTENTS

Foreword i

PART I. Automatic Weather Station Technology. 1

PART II. Data Handling 15

PART III. Information Processing. 21

PART IV. Instruments and Components. 36

A. Wind. 36

B. Cloud Height. 43

C. Temperature 48

D. Meteorological Radar. 53

E. Radiosondes 55

F. Visibility. 57

G. Pressure. 59

H. Humidity. 61

I. Water Level 64

J. Miscellaneous 66

Alphabetical List of Authors 76

PART I. AUTOMATIC WEATHER STATION TECHNOLOGY

THE SOVIET METEOROLOGICAL NETWORK AND METHODS OF OBSERVATION

Rusin, N. P., and D. P. Bespalov. (56)

A comprehensive review of the development and operation of the Soviet meteorological network from the middle of the 18th century to present days is given. In 1914, the Soviet meteorological network accounted for approximately 1400 stations and about 1500 towers. The events of World War I and the Civil War reduced this number to about 200 stations and 150 towers. Specifications and standardization procedures, developed between 1925 and 1935 helped to unify and consolidate the available facilities, and to map a program oriented toward the national interests. Proposed organizational measures included development of specifications of the network density, as related to the mission, i.e., atmospheric pressure, temperature, humidity, etc. The growth of the meteorological network, temporarily interrupted by World War II, continued after 1946. After World War II, an extensive national standardization program was formulated; new equipment was designed, and some was purchased abroad; a variety of handbooks, guides, college texts and related publications were issued. Government-sponsored work by individuals and small groups of researchers greatly contributed to this effort. In 1963—64, a general plan for total automation of the hydrometeorological network was developed. This plan included the evaluation of satellite observations, the automated input and retrieval of data, radiolocation, meteorological analysis, as well as new methods designed for the assembly, storage and retrieval of meteorological characteristics. The introduction of a growing number of high-speed computers changed the outlook somewhat. The Main Geophysical Observatory supported by numerous regional organizations took over the coordination of the principal activities in these areas.

THE DEVELOPMENT OF METEOROLOGICAL INSTRUMENTS

Sternzat, M. S. (66)

The history of the development of Soviet meteorological instruments is reviewed chronologically and by basic functional

groups covering the following areas: 1) equipment for aerological investigations; 2) equipment for measuring humidity and air and soil temperature; 3) instruments for measuring precipitation; 4) wind-measuring instruments; 5) equipment for determining visibility; 6) equipment for measuring elements of atmospheric electricity; and 7) instrumentation used in actinometry. Part of the article is devoted to special meteorological instrumentation, such as airborne instrument sets, meteorological phenomenon warning equipment, and automatic weather stations. The Main Geophysical Observatory has developed several models of automatic weather stations. One of these, the UATGMS-1, measures a number of meteorological elements and automatically processes, encodes, and transmits the data through telegraph channels. This station also has manual data input capability for visual observations. Other, simpler automatic stations are being developed by the Observatory and other facilities. These stations, which do not provide data processing, are intended for use with improved communication channels and a centralized data collection, processing, and dissemination system. Prototypes of both these types of stations have been built by the Riga Hydrometeorological Instrument Plant and are still undergoing operational testing. It is expected that the UATGMS-1 automatic telemetering weather station will be used most effectively at airports and zonal observatories. A 65-entry reference list on Soviet meteorological instrumentation accompanies the article. (LB)

CALIBRATION OF METEOROLOGIC INSTRUMENTS

Pokrovskaya, I. A., and N. P. Pateyev. (51)

The history and role of the Main Geophysical Observatory in the calibration of meteorological instruments is reviewed, with some emphasis on the Observatory's role in maintaining and using the USSR's meteorological instrument standards. Two trends prevail in the improvement of instrument calibration: the first is the improvement of calibration accuracy and the other is the development of an effective calibration method with an eye to the man-hours involved while still trying to maintain the necessary accuracy. A chronological breakdown of various attempts to improve the calibration of different functional groups of instruments is given. Since [illegible], the Observatory has been working on the development of methods and equipment for on-the-spot checking of UATGMS-series automatic weather station and other newly developed

instruments. Since platinum and copper resistance thermometers are being used extensively in automatic weather stations and other remote-operating instruments, a combination of two methods will be used to calibrate these thermometers. The unit designed by the Observatory for the above purpose consists of a liquid thermostat, a zero-point bath, and a vapor thermostat. These are used to check the 0° and 100° marks and other points which are compared with a standard platinum thermometer maintained in a thermostat. In the UATGMS-1 automatic weather station a combination of an electric psychrometer and a hair hygrometer is used to measure humidity, while in the UATGMS-3 a heated electrolytic dew-point sensor is used. Due to a lack of calibration equipment in this area, the development of equipment based on the "method of two temperatures" is suggested, along with appropriate research. The problem of calibrating barometers and wind-measuring sets is discussed briefly. For the latter, a wind tunnel with a 1-m [square] working section, capable of generating wind speeds to 60 m/sec, was designed in 1965. This unit is to serve as a standard calibrating unit for all network calibration bureaus. The use of an ultasonic anemometer for field use is also being studied for this purpose. (LB)

FOR FURTHER PROGRESS OF SOVIET HYDROMETEOROLOGICAL INSTRUMENT CONSTRUCTION (33)

A review of achievements in the field of instrument construction and automation is presented on the 50th anniversary of the October revolution, and plans for the future are outlined. The Research Institute of Hydrometeorological Instrument Construction (UIIGMP) has accomplished a great deal of scientific and technical work in improvement and development of new instrumentation. Several new unified hydrometeorological sensors equipped with standard data indicators for use in various types of automatic stations have been developed, as were several types of automatic stations. A complex automation of the Hydrometeorological Service is planned for the future. This automation will provide information which will enable the forecasting service to evaluate the hydrometeorological conditions over large surface areas on a global scale. A system of meteorological satellites is mentioned as a device for providing the most complete information in a most operative way. A system of radar installations will watch continuously and automatically for any dangerous weather phenomena, such as thunderstorms,

showers, low clouds, etc. Automatic buoy weather stations at sea and automatic ground stations will replace the classic hydrometeorological stations, providing objective information suitable for modern computation methods. Projects for the immediate future include: research for new methods of building original hydrometeorological sensors and instruments; research on effective and economically sound ways for improving reliability and accuracy of measurements of hydrometeorological elements and parameters; and development of new automatic remote control instruments and weather stations.

UTILIZING FLOW ENERGY FOR THE NEEDS OF HYDROMETEOROLOGICAL STATIONS

Stas', I. I. (65)

A rotary device for converting the energy of flowing rivers or tides into electric energy is described. The device consists of a rotor with rotating paddles as shown in Fig. 1.

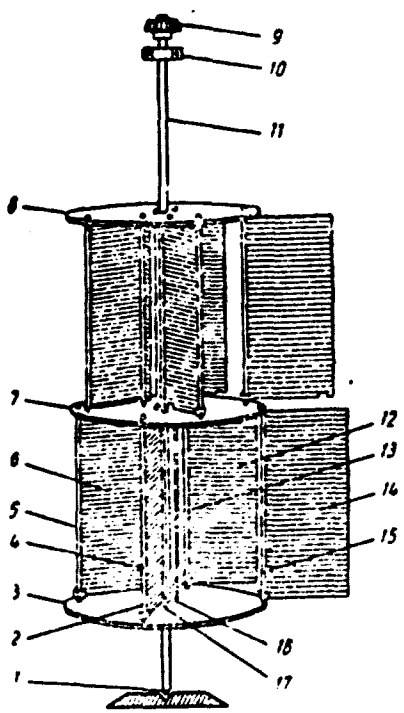

Fig. 1. The schematic of a rotor with rotating paddles: 3, 7, 8 are rotor discs; 4, 6, 12, 14 are paddles; 2, 5, 13, 15 are axes of rotation of the paddles; 16, are supports; 1 is the bearing; 9 is a conic gear; 10 is the bracket; 11 is the common axis of the rotor.

The paddles 4, 6, 12, 14 can rotate around the axes 2, 6, 13, 15 so that on one side when they are moving with the water flow they fall on the longitudinal supports 16, 17. When they are moving against the water flow, they open up so that their rib faces the flow. The lower end of their axis bears on the bearing 1, while the upper end with the bearing is held by bracket 10. The conic gear attached at the upper end may be connected to a shaft common to all rotors which in turn drives an electric generator. Such a battery of rotors may be placed on a barge or some other floating structure and a cable can be run to the shore for transmitting the generated electric power. The hydraulic power generator can also be realized as a special but simple structure as shown in Fig. 2.

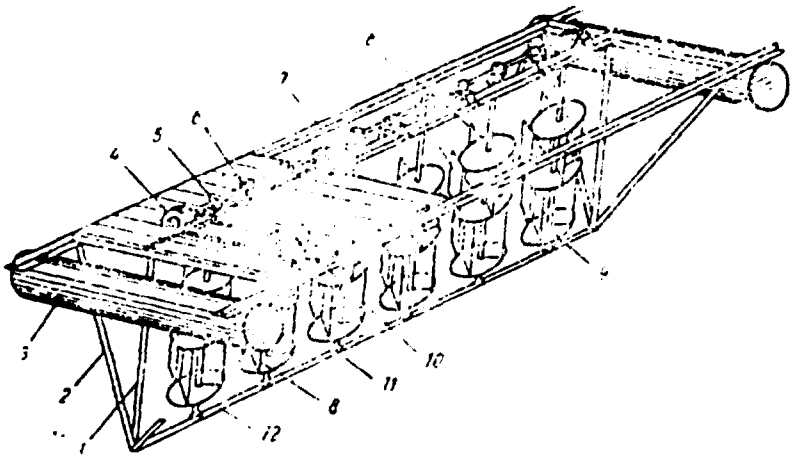

Fig. 2. Hydraulic motor: 3 - pontoons; 1, 2, 12 - frame; 8 - rotating paddles; 7 - support bearings for the rotor; 10 - electric generator; 4 - pulley; 5 - conic gear; 6 - bearing; 7 - shaft; 9 - rotor disc.

This structure can be used at hydrometeorological stations close to the shore or in other enterprises situated along relatively fast rivers such as the Danube, or the mountain rivers of the Caucasus. It can also be used in the sea when the current is strong enough (at the neck of the White Sea) and at places where water flows from hydroelectric power turbines. The use of similar devices to utilize the energy of ocean waves is also discussed.

ORG: NIIGMP

THE WORK OF AN AUTOMATIC WEATHER STATION WITH ARBITRARY TIME INFORMATION SOURCES

Grushin, S. I., and Ye. V. Romanov. (35)

The authors describe the structure of an automatic weather station operating on the principle of automatic program interrupt. The essential characteristic of the

station is the fact that the time of completion of one subprogram of the machine can be diverted rapidly to another more important subprogram by returning to the locus of interrupt of the initially begun subprogram, the operation is as follows: two sources of information A and B are assumed to be sending signals on the type of source with a generally varying periodicity T_1 and T_2 respectively. Up to the arrival of the subsequent signal there is required for each signal a minimum necessary operation with time losses τ_1 and τ_2. For some fixed time section T, at which the periodicity of each source is constant, the information from each source must be received and processed n_1 and n_2 times so that

$$n_1 = T/T_1, \; n_2 = T/T_2.$$

In order that the machine might have time to handle the reception and processing of information from the sources, the following conditions must be fulfilled:

$$n_1\tau_1 + n_2\tau_2 < T$$

For known values of τ the maximum possible frequencies of two simultaneously acting sources can be determined by the formula

$$\tau_1/T_1 + \tau_2/T_2 < 1.$$

In the case of n sources this equation becomes

$$\sum_{k=1}^{n} \tau_k f_k < 1.$$

where for each k-th source of information there is expended machine time τ_k with an operating frequency f_k.

REMOTE MERCURY THERMOMETER WITH OPTICAL FIBER INSTALLATION

Fedotova, L. V. (30)

A remote mercury thermometer designed for measuring water temperatures is presented. This thermometer utilizes light-conductive plastic fibers and semiconductor light transducers, as is shown in the schematic drawing in Fig. 1. This simple instrument is easier to operate than similar thermometers which utilize electromechanical transducers.

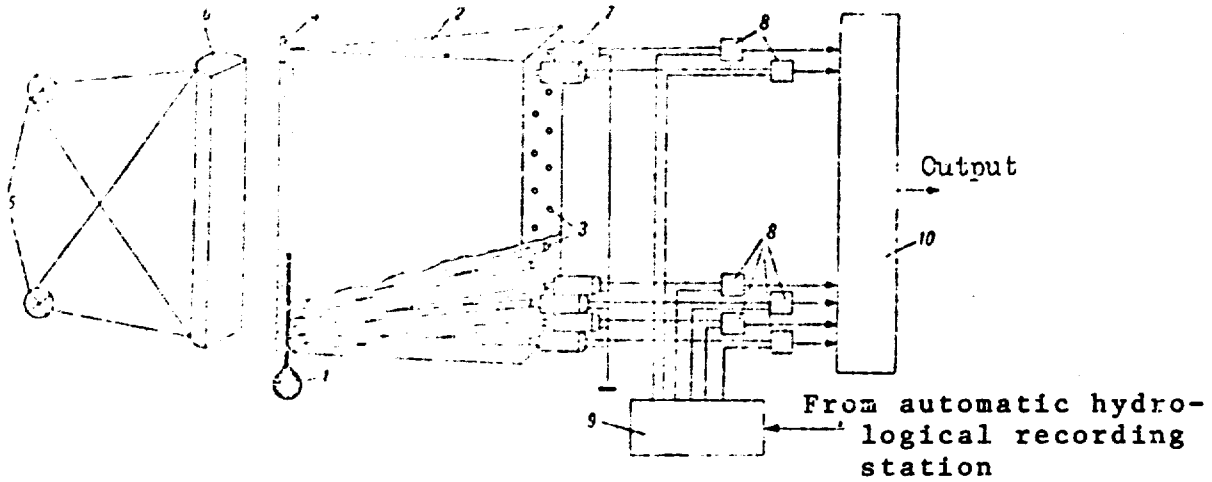

Fig. 1. Schematic of remote mercury thermometer.

1 - Mercury thermometer; 2 - block of optical fibers; 3 - receivers for semiconductor transducers; 4 - diaphragm; 5 - light sources; 6 - cylindrical lens; 7 - photodiodes, e.g., FD-2; 8 - coincidence circuit; 9 - distributor; 10 - amplifier.

In this instrument, the mercury column in the thermometer is back-lit, and the mercury cuts off the light passing to the individual optic fibers as the temperature fluctuates.

CALCULATION OF A CONTROL CIRCUIT FOR AN ELECTROMAGNETICALLY OPERATED PUNCH IN THE AUTOMATIC ARRPG [CYCLIC RECORDING HYDROLOGIC STATION] EQUIPMENT

Gnilitskiy, V. V. (34)

A circuit designed to provide compatibility between an electronic circuit and an electromagnetic mechanism, suitable for use with a tape punch of type PL-20, is presented. In the circuit of Fig. 1, C_1 is initially charged to U_0; a trigger pulse is applied through the pulse transformer, causing diode D_3 to conduct, whereupon C_1 discharges through the electromagnet, D_3 and D_2. When the capacitor discharge current falls below the level of holding current, D_3 cuts off and C_1 recharges through D_4 and D_5. R_3 and C_2 are inserted to prevent D_3 from cutting off between time $t = 0$ and $t = t_2$, as shown in Fig. 2. Given the values of pulse voltage and length, a mathematical analysis of the circuit parameters is

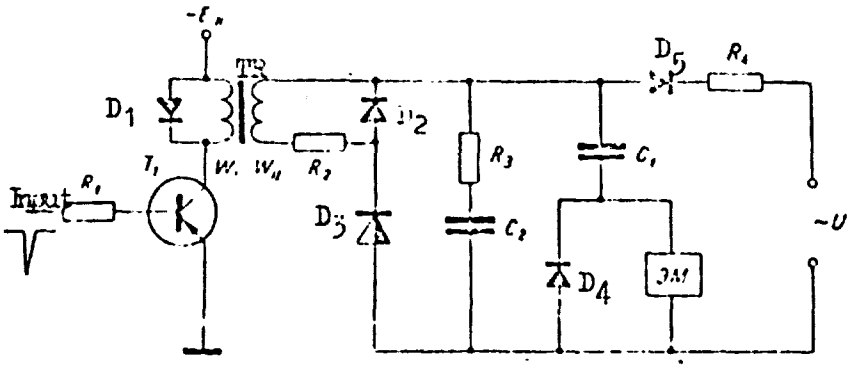

Fig. 1. Circuit for electromagnet control

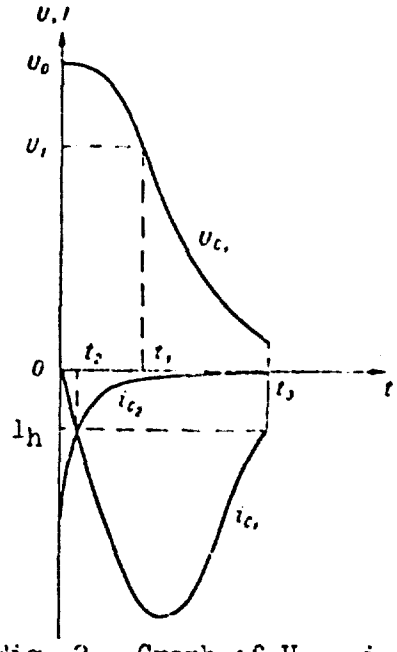

Fig. 2. Graph of U_{C_1}, i_{C_1}, and i_{C_2} with respect to t

carried out. The value of C_1 is determined graphically or by successive approximations from the solution of a second-order differential equation, while R_4 is best determined experimentally for the maximum trigger frequency. The other parameters are determined by:

$$R_3 = \frac{U_0}{I_h e},$$

$$C = \frac{t_2 I_h e}{U_0},$$

$$R_f << R_2 << R_r,$$

$$T = t_3 + t_c,$$

where R_f is the forward resistance of D_2, R_r is the reverse resistance of D_2, T is the minimum interval between trigger pulses, and t_c is the recharging time for C_1 to reach 0.9 U_0. An example is worked out to illustrate the method.

THE DESIGN OF ELECTRONIC CIRCUITS FOR HYDROMETEOROLOGICAL SYSTEMS OF DISCRETE AUTOMATIC EQUIPMENT

Fedotova, L. V. (29)

The principles of algebraic logic and switching functions are used to design electronic devices for automatic hydrometeorologic stations. This mathematical treatment minimizes the number of elements in the circuit. Circuits operating on binary codes are of two types: logic circuits in which the output signal is determined by a previous input signal; and nonprimitive circuits in which an earlier stored signal also affects the output. With logic circuits, switching functions describe the relationship between the input and output signals. These switching functions are then simplified by using algebra to arrive at the simplest circuit. For n arguments, there are 2^n sets of values and 2^{2n} switching functions. Tables of the four and 16 switching functions for one and two arguments are developed. Four steps are required in the design: 1) selecting the set of logic elements and establishing their switching functions; 2) representation of the switching functions in complete form by using disjunctions and conjunctions. If the functions = 0 in the majority of cases, disjunctions are used, otherwise the conjunctions are used; 3) minimizing the switching functions; and 4) constructing the circuit from these steps. The logic elements must be a complete set either of potential or pulse elements. The step-by-step procedure for minimization is given, in which the functions are first expanded and then joined, and the use of Veich diagrams is described. Finally a specific operation is studied and a circuit is designed from ferrite cores by optimizing the elements.

TEMPERATURE MEASUREMENT WITH THE UATGMS-1 AUTOMATIC WEATHER STATION

Bespalov, D. P., S. I. Zachek, and B. L. Kozhevnikov.

The problem of temperature measurement accuracy is examined. A sound basis is developed for the selection of the sensor material. The sensor used in the UATGMS is made of PL-1 platinum with an average resistance temperature coefficient of $3.922 \cdot 10^{-3}$ 1/deg which makes it possible to determine the temperature from -50 to +50°C with an error of less than 0.05°C. The construction of the thermometer is

shown in Fig. 1. The electrical circuit used with the thermometer consists of a dc unbalanced bridge with a voltage output. A single electronic circuit is used with the thermometers for measuring the air temperature, the wet thermometer temperature and soil temperature (Fig. 2). A

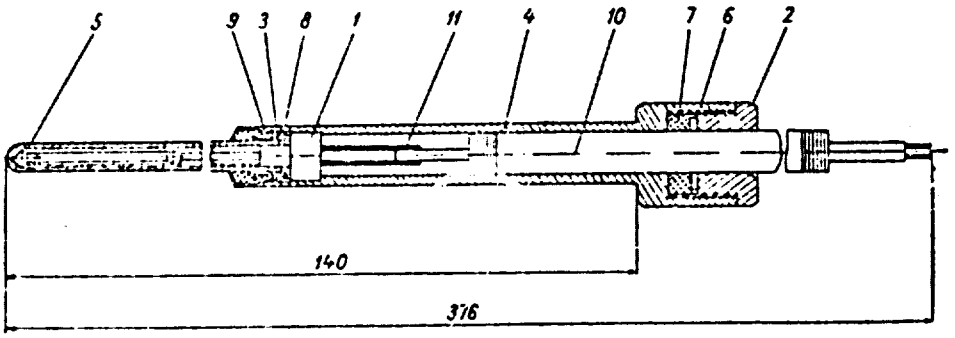

Fig. 1.

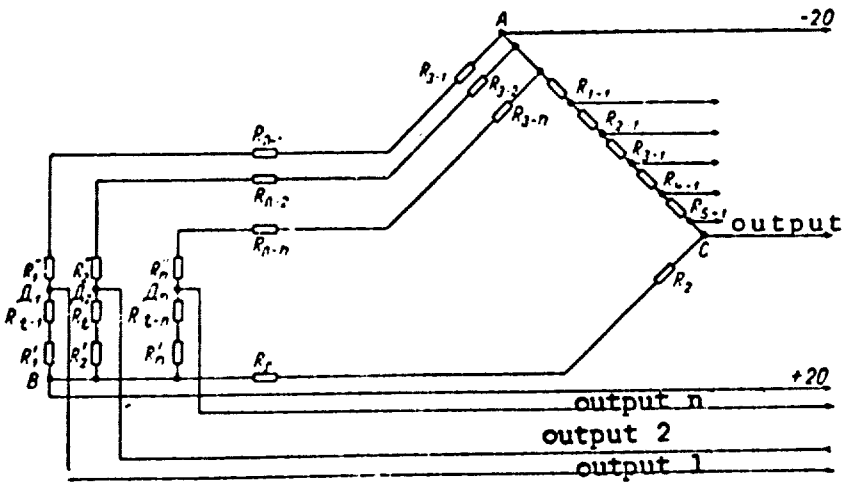

Fig. 2. Electric circuit for measuring temperature in the UATGMS-1 weather station.

comprehensive mathematical analysis of factors affecting the accuracy of the instrument is carried out. Data obtained during laboratory tests are also presented.

AN AUTOMATIC RECORDING HYDROLOGIC STATION (ARRGP)

Dimaksyan, A. M., N. B. Zeliger, V. P. Petrov, and L. V. Fedotova. (24)

The authors consider a possible version (ARRGP) of the arrangement of a low-level hydrological network (see Fig. 1), using automatic recording equipment. The purpose is to obtain records of hydrological elements from many stations and to transmit the data to centers and agencies requiring it. Automatic measurements are made of development of ice in streams, thickness of ice, chemical composition, discharge, drop of the water surface, and turbidity of the water, as well as standard elements such as temperature, height, and others. Stations may be set up in remote and inaccessible regions, so long as there is adequate power supply. Receiving-transmitting stations with equipment capable of measuring up to 10 hydrologic elements may be installed. Radio warning systems for flash floods are set in mountainous regions. Detectors, meters, and gages for the various hydrological elements are described in detail in the paper, and their interconnections within the network are discussed. Diagrams of circuits and relative positions of individual units are provided. The problem of time standardization is investigated, and accuracy of data from the entire network is calculated. From June to August 1966 a system at Lake Valday was tested. As many as 200 daily cycles of measurements were made for hourly, two-hourly, and 12-hourly intervals, and these were recorded on PL-20 perforated tape. The results were very favorable.

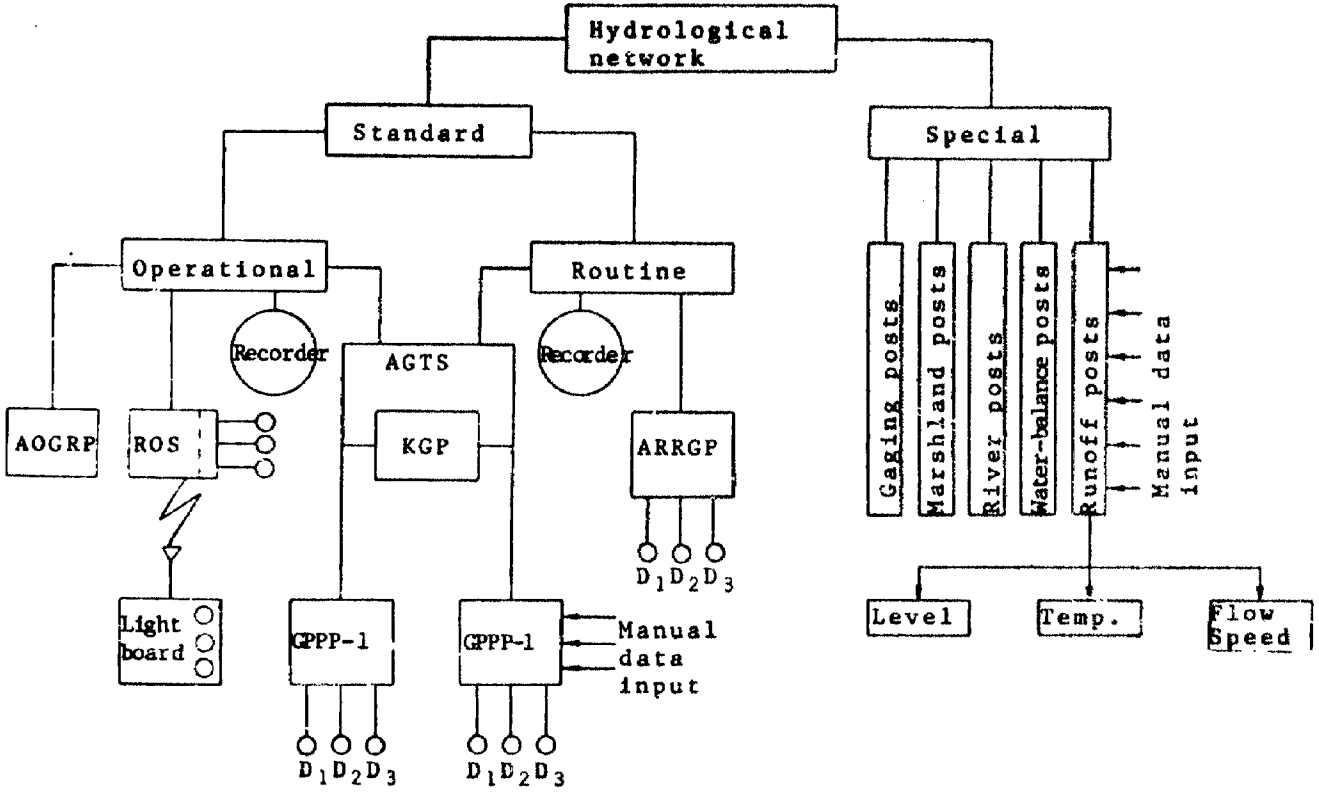

Fig. 1. Arrangement of an automated hydrological network and its basic components.

AGTS - automatic telemetering hydrological station; KGP - group hydrological central point; ARRGP - automatic routine-recording hydrological posts; GPPP-I - fully automated hydrological transceiver posts; GPPP-II - partially automated manned hydrological transceiver post; AOGRP - automatic operational radio-telemetering hydrological post; ROS - radio telemetering flash-flood warning post; D_1, D_2, D_3 - sensors.

SOME PROBLEMS ASSOCIATED WITH THE DESIGN OF A MEMORY SYSTEM FOR AN AUTOMATIC WEATHER STATION

Aniskin, L. V., and S. I. Grushin. (6)

A functional diagram (Fig. 1) of a weather station memory system and its individual parts are analyzed. The memory system contains an external storage and an internal memory as well as the following units: BMV—unit of input matrices, BU—unit of output amplifiers ZU, Bl and KK—unit for code inversion and control, D_1, D_2, D_3, D_4, D_5—address decoders, KD—address decoding switch. The operation of the above system and the design of individual units are discussed in

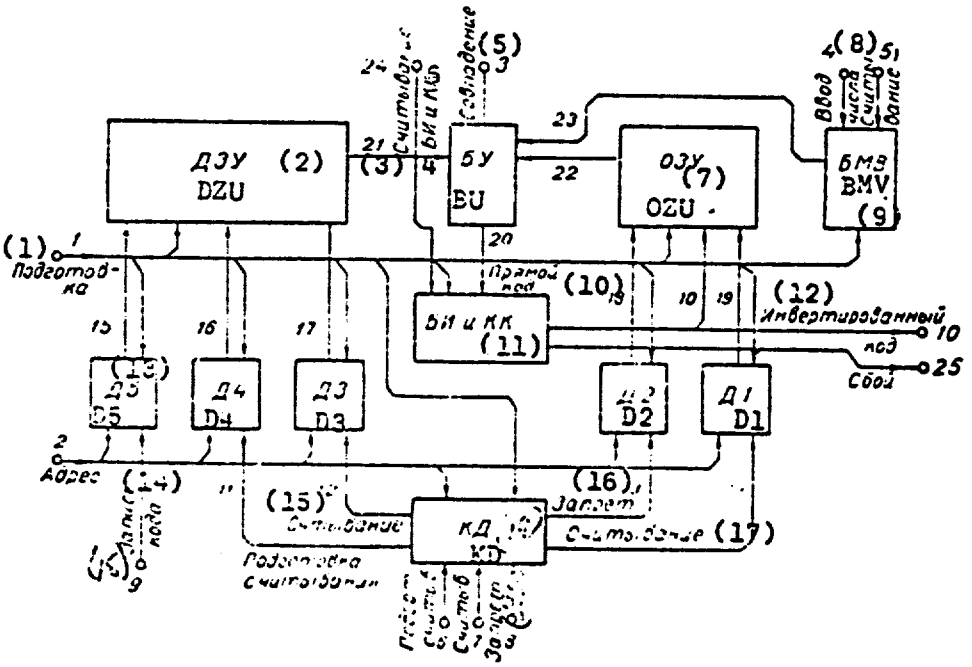

Fig. 1. Functional diagram of a memory system: 1 - preparation; 2 - external storage; 3 - reading; 4 - code inversion unit; 5 - coincider; 6 - code control unit; 7 - internal memory; 8 - input of read number; 9 - input matrix unit; 10 - direct code; 11 - code inversion and control unit; 12 - inverted code; 13 - address decoders; 14 - address; 15 - reading; 16 - blocked; 17 - reading; 18 - code recording; 19 - address decoding switch; 20 - block.

detail. Directions for a further simplification of the system are also discussed. The memory system uses ferrite

pairs providing for reliable operation over a wide spread in core parameters and wide variations in the supply voltage. The capacity of the system is 200 addresses; each address contains 22 bits. The time required to refer to a number is approximately 700 microseconds. This is not the ultimate limit for this type of system. The long term memory consists of a ferrite core matrix and diodes. There are 180 diodes for a total capacity of 3800 addresses.

PART II. DATA HANDLING

ELECTRONIC SYSTEM FOR TRANSMISSION AND RECORDING OF TELEMETRY AND RANGING INFORMATION FOR SMALL METEOROLOGICAL ROCKETS

Yermakov, V. I. (74)

A system is described which combines the functions of a radiotelemetry system and a radar tracking system. The rocket-borne portion of the system contains a superheterodyne responder (ROS-1), with which the telemetered information is transmitted by pulse-time modulated signals at a rate of 40 measurements/sec. The ground-based apparatus of the system is a meteorological radar station (Meteor). Block diagrams of the system are shown in Figures 1 and 2. Schematic diagrams

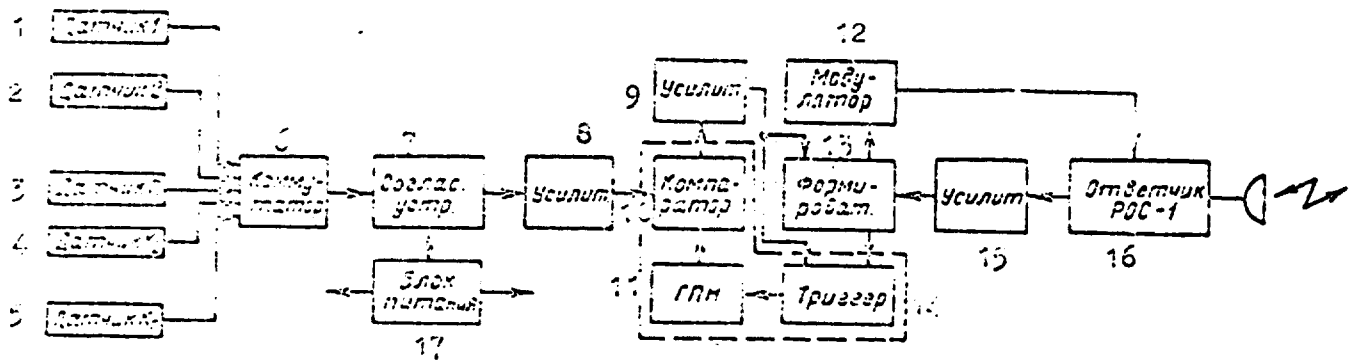

Fig. 1. Block diagram of rocket-borne apparatus. 1—5 - detectors; 6, 10 - commutators; 7 - matching device; 8, 9, 15 - amplifiers; 11 - saw-tooth voltage generator; 12 - modulator; 13 - shaper; 14 - trigger; 16 - responder (RoS-1); 17 - power supply.

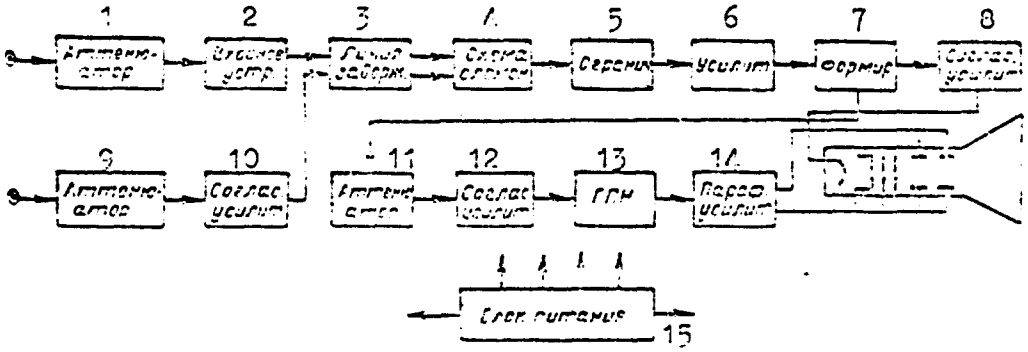

Fig. 2. Block diagram of ground-based apparatus. 1, 9, 11 - attenuators; 2 - input device; 3 - delay line; 4 - summation circuit; 5 - limiter; 6 - amplifier; 7 - shaper; 8, 10, 12 - matching amplifiers; 13 - saw-tooth voltage generator; 14 - paraphase amplifier; 15 - power supply.

of the system are given, and its operation is discussed in detail. A description of the testing procedure and an evaluation of the test results are presented. The weight and volume of the rocket-borne portion do not exceed 300 gm and 0.2 dm^3, respectively, and its power requirements are less than 10 w.

ON THE PROBLEM CONCERNING THE TRANSMISSION OF HYDROMETEOROLOGICAL DATA ALONG COMMUNICATION CHANNELS

Kamyshnikov, V. V. (38)

The reliability and transmission rate of hydrometeorological data along a multichannel communication line with a single return channel were investigated. In this system, the multichannel provides the speed, while excess coding provides the reliability. At the transmitting point, the information blocks are given the excess coding and are transmitted along the channels and simultaneously stored in an accumulator. At the receiver end, the excess coded information block is checked, and, if no error is detected, a signal along the return line erases the accumulator and instructs the transmitter to continue sending new information. With an error, retransmission is requested. To determine the reliability, the independence of the channels makes the system equivalent to a single channel with repetition, and the probability of correct decoding is calculated

on this basis. The probability of correct reception can also be expressed by the equivalent probability of an error. The reliability was found to depend on the appearance of detected and undetected errors, the state of the return channel, and the length of the information block. The transmission rate depends on the transmission rate for the block and on the retransmission expectancy; the total transmission time depends on the block length, introduced excess coding, number of channels, state of the return channel, and the system inertia. Calculations are presented for a 6-element code with binomial error distribution.

A METHOD OF DETERMINING THE STABILITY OF COMPLEX DYNAMIC SYSTEMS

Didu[illegible], G. A. (21)

In keeping with the trend toward automation in the Hydrometeorological Service of the USSR, it is becoming necessary to set up different automatic computing systems and algorithms for obtaining information from low-level networks and for treating this information efficiently. The author examines a method for determining stability and qualitative hydrometeorological and other complex automated systems based on the matrix method. Investigations have been made directly by the initial matrix of the coefficients of a system of linear differential equations, written in the normal Cauchy form. The initial matrix of coefficients is transformed to a special form relative to which all determinations are made. The proposed method is designed for use with an electronic digital computer. If the dynamics of an automatic system is described by a system of differential equations of a high order, its integration by ordinary numerical methods is impractical because of the great time involved. The matrix method commonly leads to considerable decrease in computer time.

ON THE PROBLEM OF DETERMINING THE MAGNITUDE OF THE TELEMETRY ERROR WHEN USING A NUMBER PULSE CODE

Fedotova, L. V., and O. S. Chugreyev. (31)

An error analysis is conducted for a number pulse code used in a hydrologic telemetry system which allows the

selection of the code and the method for recording signals resulting in a given error. In the number pulse code, the magnitude of the measured quantity is converted to a number of pulses (N). The precision of this coding is independent of voltage fluctuations, the receiver circuit is simple and does not require phasing. If there are k false pulses received, the relative error (δ) is $\pm k/N$. To insure a given δ, N is selected with consideration of the probability of k. This probability of an error (p_e) is analyzed for the two receiver systems. One system converts each incoming pulse to a series of short cycle pulses of frequency f_T and records only the leading pulse of the packet. With only edge distortions, errors occur when the packet duration is $< 2\Lambda$ ($\Lambda = 1/f$). In the second recording method (gating), the middle part of the pulse is recorded, and an error results only when the remaining part of the pulse is $< 2\Lambda$.. The probability of this is analyzed by using a two-quantity normal distribution. The analysis showed that δ is smaller for the first recording method than for the second one with self-tuning of the phase. As the channel standard deviation (σ) decreases, δ decreases. With a given σ and Λ, δ decreases linearly with increasing N.

THE PROBLEM OF OPTIMUM FREQUENCY AND ACCURACY OF METEOROLOGICAL MEASUREMENTS

Sadovnikov, A. V. (57)

The author presents a new approach to the optimal organization of a system of meteorological observations in order to attain optimum frequency and accuracy of observations. The disturbances in the meteorological fields regardless of their nature are considered as individual configurations which can be characterized by geometrical dimensions ℓ_{con}, by intensity of maximum magnitude of the disturbance f_{con}, and by duration τ_{con}. In order to measure these parameters, the measurement system must possess particular resolving capacities; for geometry it is the distance between measured points ℓ_p; for the measured characteristic it is the measurement accuracy f_p; and for time it is the interval between the measurement τ_{mean} and the inertia τ_p. The correspondence between the parameters of the measured disturbances and the parameter of the measured system is expressed by the non-dimensional magnitudes

$$\ell_{con}/\ell_p = L,$$

$$f_{con}/f_p = F,$$

$$\tau_{con}/\tau_{mean} = N,$$

$$\tau_{con}/\tau_p = T.$$

In the case of the inertia of the apparatus, T = 0 indicates that the time during which the instrument can sense the state of the parameter f of the disturbance is infinitely greater than the time of the existence of the disturbance. $T = \infty$ signifies that the time of existence of the disturbance is infinitely less than the time in which the measuring instrument can sense the variation that is occurring; the apparatus is ideally inertialess. In the case of measurement accuracy, $F < 1$ corresponds to such a low measurement accuracy that the fluctuations of the measured value is less than the resolving capacity of the apparatus; $1 \leq F < 2$ signifies that the intensity of the disturbance is equal to or somewhat larger than the resolving capacity of the apparatus; $F \leq 2$ represents conditions when the disturbances can be distinguished by their intensity by differentiating F states. In a similar manner, the author discusses the differences between measurement points L and the frequency of measurement N. In view of the fact that disturbances may be of diverse dimensions, intensities, and durations, at each moment it is necessary to develop a diversity of systems for the atmosphere. Each system should embrace a particular territory, express a definite density of measurement points, and a given resolving capacity by the apparatus with which measurements are made at fixed intervals.

MACHINE THAT UNDERSTANDS THE LANGUAGE OF THE IONOSPHERE (47)

Scientists at the Kazakh SSR Academy of Sciences have programmed an electronic computer to understand the language of electric pulses reflected from the ionosphere and recorded on a tape recorder. They have developed an arrangement whereby information about the ionosphere is fed into the "electronic brain." It was previously customary to translate manually the information gained from electrical signals transmitted from earth and reflected by the ionosphere into computer language using a multitude of complex tables. The innovation made by the Almatinsk scientists consists in automating the input of information about the ionosphere into

a "BESM-3M" computer. The latter receives the information in the shape of a continuous signal from a tape recorder located at an ionosphere signal receiving station. This station is located 20 km away from the computer in the Zailiysky Alatau mountains at 1300 m above sea level. According to specialists, this development will greatly broaden the capabilities of the computers. It not only will speed up by ten or more times the input of information into the electronic brain but will also make it possible to teach the computer to "understand" without a translator the language of other electric pulse systems, particularly those of electrocardiograms. Two forms of the arrangement are feasible. In the first, the recording of the continuous signal on the magnetic tape is carried out with so-called digital-pulse modulation. The effective speed of signal input is up to 1000 digits per sec. In the second form, the continuous signal is stored in an intermediate memory without preliminary conversion. The input speed reaches 5000 digits per sec.

PART III. INFORMATION PROCESSING

SOME PROBLEMS IN AUTOMATIC PROCESSING OF HYDRO-METEOROLOGICAL INFORMATION

Dobrysnman, Ye. M. (25)

The paper deals with the characteristics of the primary meteorological information and the algorithm of the initial processing. The rate of incoming information (see Fig. 1)

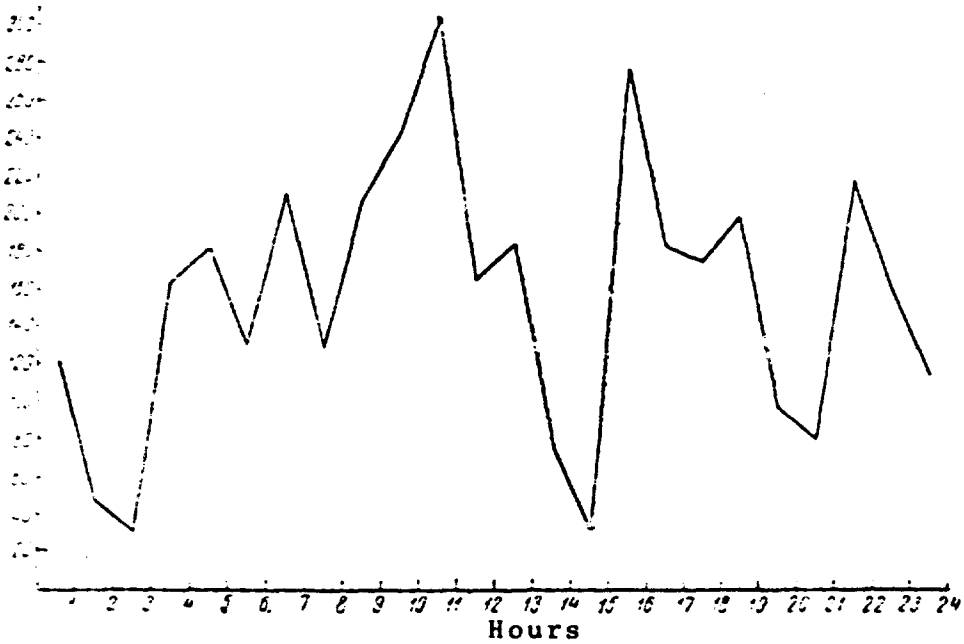

Fig. 1. Incoming information flow rate for one day, expressed in hundreds of 5-digit groups.

to the processing centers varies widely, as are the total number of messages in a given observation period. Nearly ten types of information reach the central stations (see Fig. 2). The information is initially sorted in accordance with its nature: synoptic, aerological, hydrological, agro-meteorological. In the next stage the information is processed in accordance with its other characteristics, such as time, data, geographical point of observation, etc. The second stage can lead to a creation of an information retrievalssystem. To be fully useful such systems must satisfy the following requirements:

Fig. 2. Type and volume of information received by the Hydrometeorological Center, USSR.

Type of information	Code used	Input frequency	No. of 5-digit decimal-code groups (in thousands)	Remarks
Ground-based synoptic observations	KN-01 KN-09	Four basic daily obs. periods and other periods	300	
Aerological sounding data	KN-04	Two basic obs. periods and other periods	200	
Hydrological data	KN-15 KN-24	Daily, 5-day, 10-day	30	
Data from coastal and ship stations	KN-02 KN-09	Four basic periods and others	80	Part of incoming data from non-Soviet ships are in national codes
Agrometeorological data	KN-21	10-day, monthly	20	
Climatic data	KN-19 KN-20	Usually monthly	60	
		Daily total	690	

1. Ability to sort the data accurately in accordance with a given characteristic.

2. Standard sequence of information in all telegrams containing summaries.

3. Distinctive separation between the telegrams, summaries, and information retrieval.

4. Simplicity and uniformity of retrieval for the necessary data in accordance with their characteristics.

The author considers the algorithm for such a system in considerable detail.

PROBLEM OF AUTOMATING THE ACQUISITION, PROCESSING, STORAGE, AND DISSEMINATION OF HYDROMETEOROLOGICAL INFORMATION

Klyukin, N. K. (43)

Since the solution of problems relating to the full-scale automation of the observation, collection, processing, storage, and dissemination of hydrometeorological data will require several years, during the transition period the author proposes methods for automating the most labor-consuming types of operations which make up various links in the overall automated system. In particular, methods for recording data on a permanent recording medium for computer input are examined. Great attention is paid to the automatic recording of data from communication channels or within the measuring equipment. For many types of nonautomated observations, it is proposed that responsibility for entering data on permanent recording media be relegated to the point of origin (the observation point). The processing and checking of data recorded on permanent media is performed by computer at the processing centers. Here, broad prospects emerge for the full application of statistical methods and the almost complete elimination of manual labor. It is suggested that the processing of the basic types of hydrometeorological information be performed at 1-st class territorial centers and at the World Meteorological Center (Obninsk Section of the USSR Hydrometcenter). Due to today's volume of hydrometeorological information, it has become extremely difficult to use punch cards as a permanent recording medium, and the necessity for changing to a new permanent medium (microfilm

Best Available Copy

with binary code) becomes evident. Problems in the use of modern data storage methods and information dissemination methods are also mentioned. [LB]

A SYSTEM FOR AUTOMATED PROCESSING OF OPERATIONAL HYDROMETEOROLOGICAL INFORMATION

Klyukin, N. K. (44)

An automated system for processing hydrometeorological observations is discussed. The huge volume of meteorological data and the complexity of the algorithms used in the calculations necessitate the use of electronic computers. Primary processing to produce lists of factual material, and a statistical process are employed to calculate the characteristics of the parameters, to determine the in space-time coupling, and to analyze these elements and to produce charts, graphs, etc. One system sends punched tapes to the computers at meteorological centers for preliminary processing. Here the data are published or put on microfilm and magnetic tape for exchange, storage, or further processing. A binary-digital code (to which M-2 international telegraphic code can be computer-converted) is used. For long-term storage, microfilm with the following requirements is used: 1) reliability is $> 10^{-5}$—10^{-6} bits; 2) data input rate from microfilm and magnetic tape are comparable; 3) information density is 300—1000 bits/cm^2. A computer system which translates data input to pulses sent to luminous elements can produce microfilm directly. For short-term use, magnetic tape is suitable, but all system components must be compatible. The computer program should have interrupt and priority commands and be able to handle fixed and floating modes. Such devices as "Silluet" should be investigated for automatic production of graphs.

THE CHARACTERISTICS OF SCHEDULED HYDROMETEOROLOGICAL INFORMATION AND SOME PRINCIPLES OF ITS PROCESSING AND STORAGE

Klyukin, N. K. (42)

In this voluminous survey paper, the author considers the question of what to do about the backlog of unprocessed hydrometeorological data and how to speed up the processing of current information. This backlog on Jan 1, 1967 was

200,000,000 punched cards, while the annual volume amounts to 105,000,000 punched cards. Since the current rate of processing of these data is less than half the annual volume, some means of storing or disposing of the unprocessed information must be found. The author contends that it would be dangerous to destroy original information without first making a judgement as to its future value. Unfortunately, such judgement is difficult to make. To alleviate the problem several approaches are suggested. First, the incoming information should be immediately classified in accordance with its utility, intended purpose and origin. Further, a distinction should be made whether the data are suitable for machine or for manual processing. Second, the incoming information should be immediately available in a form either suitable for immediate or subsequent computer processing or for storage on microfilm. Some work on thermoplastic storage using an electron beam technique is now being conducted. Third, storage periods from 5 to 20 years are proposed in accordance with the nature of the information and its potential value. The nature of hydrometeorological information is discussed, as is its statistical analysis and, briefly, the scientific information service. Tables containing mathematical formulas used in the statistical analysis are included.

A METHOD OF SORTING AEROLOGICAL INFORMATION AND CREATING AN INFORMATION SYSTEM

Kastin, O. M. (41)

This paper deals with automatic computerized processing of meteorological information. The specific program described by the author is designed for sorting and re-arranging data contained in the aerological telegrams. To reduce the processing time (which is particularly important under the operating conditions) the program is divided into two parts. In the first part the information is sorted and associated with the coordinates of a net covering a given region. Auxiliary tables are generated from the information being processed. In the second part the actual re-arrangement of the data takes place. This process is based on the results of the first part and therefore is no longer related to the parameters of the new or to the dimensions of the region. Basically, the object of the program is to associate the identification of a station sending an aerological telegram with its location in terms of an established reference net for a given region. The program is described in some detail, including a block diagram.

FEEDING INFORMATION FROM PUNCHCARDS CONTAINING GRAPHIC MARKS INTO DIGITAL COMPUTERS

Bychkov, N. F., and V. D. Ivanov. (17)

The authors describe a method for entering hydrometeorological data on punchcards by means of graphic marks and for directly feeding these punchcards into digital computers without preliminary perforation. The punchcard is a blank containing 27 vertical columns and 11 horizontal rows. The numbers are recorded by cross hatching with a soft graphite pencil an oval with the number which must be written in a particular position. The device for feeding the punchcard into a computer is a modernized reading device from the M-20 electronic computer. A circuit diagram of this device is given. The upper brush is commutated in accordance with a master punchcard with graphic marks. A steel contact cylinder is replaced by an insulated cylinder of transparent plastic. Camshaft discs corresponding to the number of lines on the punchcard have 11 notches each. The electrical circuit of the mass valves of the channels enables reliable reading of the information from the punchcards. The principle of the reading of the graphical marks is based upon the electrical conductivity of a graphite layer which closes a circuit between three adjacent brushes.

ON THE ORGANIZATION OF DATA SEARCH IN THE DESIGN OF AUTOMATIC PROCESSING SYSTEMS FOR METEOROLOGICAL INFORMATION

Semendyayev, K. A., and O. M. Kastin. (61)

A computer library for use in conjunction with computer processing of meteorological data has been developed to facilitate the association of encoded numerical data with the particular meteorological station where the data originated. The station identification consists of a five digit number in which the first two digits indicate the region, and the last three refer to the station number. The library satisfies two conditions: the search time is short as it has to be in this type of operation; and, since it is desirable to store the library data in the operational memory of the computer, the library must be compact. The library consists of the list of elements comprising the identification words, and several catalogs. For instance, the retrieval of an index for an aerological station requires

60—70 operations, while the program occupies 59 locations. Information pertaining to 768 stations can be stored in this manner. At present, the listing of indices for aerological stations requires 256 memory locations, while the catalog needs 25. For synoptic stations the capacity is 5100. At present the library occupies a total of 1220 locations. The availability of programs for automatic generation of such libraries makes it possible not only to change the contents of the existing listing, but also to generate new, more specialized libraries.

AUTOMATIC DECODING OF AEROLOGICAL TELEGRAMS

Semendyayev, K. A., Z. F. Gladkaya, and N. N. Ul'yanova. (60)

A new algorithm was written and tried out for automatic processing of aerological telegrams. The purpose of the program is to retrieve the aerological messages contained on punched tape together with other meteorological messages, statistically control the selected data, convert the contents into a standard form, and, finally, facilitate the subsequent automatic processing of the data. The telegrams may be entered directly from punched tape into the computer. From the computer memory the data are transferred onto a magnetic drum, where they are subdivided into three zones. During the primary processing the data stored on the drum are arranged into a standard form. During the following analysis the aerological information is retrieved in accordance with certain code groups associated with the type of data; for instance the value of the standard isobaric level (850, 700 or 500 millibar). The station identification is found using a stored glossary. Finally, the retrieved information is arranged in a standard form and stored on the magnetic drum for subsequent use. The program was tried out during four different periods during which a total of 2342 telegrams were processed. Despite some errors in processing and in the incoming information the results were, by and large, satisfactory.

THE PRINCIPLES OF ALGORITHM GENERATION FOR PROCESSING OF DATA ON SOURCES OF ATMOSPHERICS

Tsimmerman, G. G., and S. B. Shamuilova, (70)

An algorithm was generated for finding the coordinates and determining the shape of the sources of meteorological disturbances on the basis of bearings obtained from several points. While the paper deals with atmospherics, any fast moving atmospheric disturbance such as a tornado, hurricane, cl ud burst, etc. can be located using the method developed. To obtain the bearings on atmospherics the same methods were used as for the location of an unknown radio-transmitter, the difference being that there are about 44,000 such "unknown transmitters" active on earth every day and the transmissions occur at a rate of 100 every second. Therefore, the bearings are found not for all atmospherics, but only for those which are active at the time when synchronizing commands actuate the remote locating installations. A cluster of radio-locators consists of 4—6 separate stations (radiogoniometric points), with one of them exercising the command functions for the others (sometimes sequentially). The minimum angular increment of the bearings is 2°, hence the angular values are recorded as two digit numbers from 00 to 90. An observation period is between 15 and 20 minutes. At the processing centers the received messages are decoded, the data are plotted on a map covering a territory of several thousands of kilometers, and the sources of atmospherics are located in the conventional manner. Some problems: uncertainty due to the intersection of more than two lines, each of which passes through an accurately known point in a certain direction; rejection of some bearings, etc. These problems are solved on the basis of instructions and the experience of the operator. The information on atmospherics is subsequently distributed using telegrams known as "Atmos." Some questions arise concerning the shape and the location of the atmospherics which also have to be answered by the operator using his intuition. The purpose of the computer program described in the paper was to eliminate the manual processing of information at the centers. The computer accepts the information from the radio-locating stations, processes it, and sends out the "Atmos" telegrams. The decoding of the original messages and the encoding of the outgoing telegrams is extensively discussed by the authors. Two processing variants were employed. 50% of the processed cases did not exceed the maximum permissible error and 80% did not exceed twice the error value.

LOGIC ELEMENTS BASED ON CURRENT DISTRIBUTION AND THEIR USE IN DISCRETE SYSTEMS. PART I. OPERATIONAL PRINCIPLES AND TYPICAL CIRCUITS

Afinogenov, L. P., and N. I. Radomysl'skaya. (1)

The operation and performance of digital systems utilizing logic elements based on current distribution (CD) are reviewed. The main component in such logic elements is a ferrite transformer or a coil whose impedance is a function of the magnetic state of the core, hence the term "current distribution" element. Initially, a "write" current pulse magnetizes the ferrite core in a direction determined by the direction of the current flow with respect to the core; if the subsequent "read" current pulse passes in the same direction as the preceeding "write" pulse, the winding offers low impedance. The impedance is determined by the ohmic wire resistance and the minor change along the flat portion of the hysteresis loop in the magnetization state of the core. In contrast, a "read" current pulse of the opposite direction will encounter high input impedance due to a reversal in the magnetization state. A core with multiple windings functions like a relay in which the number of contacts equals the number of windings. Some of the complex digital systems based on this analogy are described. The commutator is intended for switching of pulses coming through several inputs into different output circuits. Pulse distribution is controlled by the separate pulses introduced through the control inputs. Two sets of transformers are used. The first set is switched into the desired logic state by the control pulses and subsequently distributes the input pulses in accordance with this logic state. Since the magnetization state of the high impedance (with respect to the input pulse) elements is reversed and the information content thereby destroyed, an auxiliary set of logic elements is provided. It is designed to preserve the initial logic information and to restore the main set of logic elements to their original state after the passage of the input pulses. This operation is controlled by clock pulses introduced into separate windings. A distributor works similarly but the input-output relations are fixed. A binary shift register and a ring counter also include two sets of transformers and involve two-cycle operation. OR, AND, and NOT logic functions based on CD elements, as well as applications of them (such as a binary reversible counter, a decimal reversible counter, a binary accumulating adder, a decoder, and a code comparator), are described in detail and circuit diagrams are included. CD digital systems are used in automatic meteorological stations and equipment.

LOGIC ELEMENTS BASED ON CURRENT DISTRIBUTION AND THEIR USE IN DISCRETE SYSTEMS. PART II. DESIGN OF CURRENT DISTRIBUTION SYSTEMS

Afinogenov, L. P., and N. I. Radomysl'skaya. (2)

Design data and design examples of digital systems based on current distribution (CD) elements are presented. There are two main types of CD circuits: series connections of individual CD elements (for instance, in the collector circuit of a driver transistor), and series-parallel connections which permit realization of complex logic functions. To ensure proper functioning of these circuits the following conditions must be fulfilled: 1) The "true" current must be adequate to ensure complete state reversal of the cores. 2) The "read" pulse must terminate before reversal of the core's state is completed. 3) The driving current must be of sufficient amplitude to account for all the "false" currents which branch off. 4) Because of the inductive load, the driving pulses increase their amplitude gradually with time. This rise must be fast enough to achieve the required value during the operational time of the pulse. 5) The total voltage applied to the driving transistor must not exceed the maximum value specified for the particular type. 6) The EMF generated during the "wirte" cycle in a multiwinding transformer must not exceed the maximum reverse voltage of the diode connected to these windings. 7) The design values must take into account the component tolerances and the variation in pulse parameters in their least favorable combination. 8) The logic design with CD elements must ensure the proper logic function during the "read" cycle. The authors consider each of these conditions separately and provide all required design equations as well as practical advice. Many examples are used to illustrate the explanations. A separate section deals with designs for operation during wide variations in ambient temperature.

OPERATION OF A TWO-COORDINATE TRACING DEVICE IN A URAL-2 COMPUTER SYSTEM

Bychkov, N. F., and V. D. Ivanov. (18)

A two-coordinate plotter interfaced with an electronic computer to draw weather maps is described. The device operates as a self-contained unit, i.e., by means of an

Best Available Copy

intermediate information carrier. and it is designed according to the principle of analog systems. The technical design data are set by the requirements for producing synoptic weather maps. A function generator with a feedback unit (for each of the coordinates) forms and electrical bridge with a diagonal whose misalignment voltage reaches the system of the electrical drive of the coordinates by way of an electronic amplifier. In order to provide a linear relationship between the voltages yielded by the controlled resistances and the movement of the slave mechanism, it is necessary to fulfill the conditions of a constant sum of numerically controlled resistances R_1: R_2, R_0, i.e., $R_\Sigma = R_1 + R_2 + R_0 = \text{const}$. A circuit diagram of the generator with the feedback unit of one of the coordinates, a diagram of the direction of movement of the voltage and a diagram of the output commutator of the two-coordinate plotter are presented. The programming of its operation is given in detail.

SEMI-AUTOMATIC PLOTTING OF GRAPHIC INFORMATION

Dreyer, A. A. (26)

The problem of converting information obtained in graphic records to electric signals or to digital values necessary for processing data (for use in an electronic computer) is examined, and simple schemes are suggested for this purpose. The conversion of graphic information to a discrete digital form is made in two steps: 1) an analog signal is obtained corresponding to the graphic record (an operation inverse to that taking place during the recording process); 2) the analog signal is made discrete and is represented in the required code form. The analog signal may be obtained by means of an optical plotter or by tracing. The tracing method, semi-automatic, permits one to trace any record. Use of the EPP-90 automatic potentiometer in this procedure is described, and a scheme is devised to obtain a signal proportional to a processed record of any value. Control of the plotting scale allows automatic introduction (during treatment of a curve) of calibration or scale factors and also allows one to obtain digital values in units of the measured element rather than in millimeters of tape. The analog signal obtained from the curve may be used in different ways: converted to discrete values, converted for introduction to a computer memory bank, introduced into an analog analyzer, recorded on magnetic tape, or recorded on another tape with some desired scale. It is stated that use of the

Best Available Copy

described setup for plotting monthly-record tapes of atmospheric pressure will permit printing out of ordinate values on the tape in 30 minutes.

ORG: State Oceanographic Institute (Gosudarstvennyy okeanograficheskiy institut)

A DESCRIPTION OF A STANDARD INFORMATION PROCESSING PROGRAM FOR A TWO-COORDINATE PLOTTER

Rubinshteyn, Z. R. (55)

The author describes a special program for controlling an on-line digital plotter. The coordinate information for each point of a curve to be automatically plotted by the plotter must be in the following format:

1. The incremental increases in both orthogonal axes must not exceed a predetermined value.

2. The coordinates of each point on the plot must not exceed the value of a three digit octal number ($777_8 = 511_{10}$) and must be located in a specific location in the computer's operational memory.

3. The coordinates of every point must also include information for pen and plotter control.

The program allows for an arbitrary selection of the scales, the origin point, and the incremental coordinate change. 250 points per second can be plotted, with the speed of the plotter being determined by the size of the increments. The program was written and tested in the Hydrometeorological Center SSSR using the M-20 computer. The paper includes a brief description of the program details and of the mathematical relations involved.

AUTOMATIC PLOTTING OF ISOLINE MAPS

Semendyayev, K. A. (59)

An algorithm for automatic generation of isoline maps by means of a computer and a two-coordinate plotter is

Best Available Copy

described. The special features of the method are the quadratic (rather than linear or cubic) interpolation and the simultaneous tabulation of isoline tables on the basis of a single analysis of the input information. The algorithm has, basically, the following form:

A given rectangle is divided into a set of bands which are parallel to the X axis. Each band is subdivided into k thinner bands, with k selected such that within the limits of the required accuracy linear interpolation in the Y direction is possible within the width of the smaller band. In addition, the incremental increase of the function f(x, y) in this direction must not exceed twice the value of the incremental function change between the isolines, which is always possible. Using quadratic interpolation in Y, the values of f(x, y) at the reference nodes on the upper boundary of the band are computed. This upper boundary is also the lower boundary of the next higher band. Naturally, no interpolation is necessary for the lines serving as the boundaries of the main (larger) bands. Next, by means of inverse quadratic interpolation the points of the isolines are located on this boundary line. After that, taking each of the rectangles forming the band, the isoline points are located on the side (vertical) lines; the appropriate points are connected, and their coordinates listed in the isoline tables, while the plotter simultaneously plots the isoline map.

The mathematical basis of this technique, the program details and the transfer of information to the plotter are extensively discussed. An experimental program based on the described algorithm was tried at the Hydrometeorological Center USSR. The plotting of an isoline map used for a short term operational numerical prognosis (26 x 36 points) took only three minutes.

THE PRINCIPLES OF THE DESIGN OF A PROGRAM FOR RETRIEVAL OF SYNOPTIC TELEGRAMS FROM THE GENERAL FLOW OF METEOROLOGICAL INFORMATION

Kartashova, M. V., and T. V. Popova. (40)

A computer program was developed for automatic retrieval of synoptic telegrams from the total flow of meteorological data into the central meteorological station. The problem of designing the program was complicated by the fact that the

Soviet Union uses several non-standard methods for coding the meteorological messages, while the majority of other countries use a standard code. In fact, three different title codes are used: the "four-digit" number, the "ship-board" message, and the "Byul" type. The international code messages containing synoptic information always begin with the small letter "s." To retrieve the telegrams containing synoptic information several consecutive search and check methods are employed. The process begins by deciding whether a given line in fact is a title of a synoptic summary. To this end, at first only lines containing no more than six groups of digits or letters are passed. Next, the line is tested for the presence of certain identifying symbol groups. Depending on the identifying symbol, the type of information contained in the telegram can be classified using the corresponding subsequent symbol groups. Since the end-of-message group "nnnn" is frequently distorted or missing the search continues until two consecutive lines are unidentifiable. After the message has been recognized as containing a synoptic summary it is converted from teletype into decimal code and stored in the memory of the computer with an appropriate identification. The information is transferred from the teletype tape onto magnetic tape and then automatically processed. The number of telegrams from the overland stations exceeds by far that from the ship-board stations. The authors discuss at length the sources and nature of errors occurring in the course of automatic processing. Experience shows that 70% of messages from the over-land stations and 60% from the ships are recognized correctly. The main sources of loss of synoptic data are errors in the message titles, non-standard titles, and the absence of a clear end-of-message group. The large variety of codes complicates the automatic retrieval. The program uses about 1300—1400 memory locations, data from 10,000 stations occupies 2000 locations. The time for processing the data from one period (September 23, 1965, six hours) with the print-out of only the rejected telegrams was 25 minutes.

SOME RESULTS OF MECHANIZATION OF THE PROCESSING OF HYDROLOGIC OBSERVATIONS

Dement'yev, N. F., and V. I. Grigor'yev. (19)

This paper represents the results of continuing efforts to automate the processing of hydrologic data. The authors state that such processing must provide for mechanization

Best Available Copy

of all stages of the processing, beginning with the initial handling of observational data and ending with advanced programming and processing for research purposes. The processing must be carried out by means of electronic digital computers with appropriate output systems. Mechanization of the process for nonautomated hydrologic stations will give best results when the observations are handled by digital computers directly at the observation site. Where observations are not automated, it is now possible to develop a system of automatic treatment of observations from an extensive hydrologic network. Further investigation should be directed toward the search for new, more efficient methods of preparing data for input into digital computers, and also toward developing algorithms and programs that include the most difficult stage, the automatic logic checking of observational results.

PART IV. INSTRUMENTS AND COMPONENTS

A. Wind

APPARATUS FOR MEASURING THE MEAN VALUES OF WIND SPEED AND DIRECTION. CLASS 42, NO. 218552 [Announced by Scientific Research Institute of Hydrometeorological Instrument Manufacture (Nauchno-issledovatel'skiy institut gidrometeorologicheskogo priborostroyeniya)]

Gulyayev, A. A. (36)

An Author Certificate has been issued for an apparatus for measuring the mean values of wind speed and direction (see Fig. 1). The unit contains receivers for wind speed and direction and a pulse-generating system. To increase accuracy and reliability in measurements, the pulse-generating system is made in the form of converters, such as photodiodes (placed along the axes of a rectangular system of coordinates, the origin of which coincides with the axis of rotation of the wind vane) and a disc supporting concentrically located pulse-producing loops. The axis of orientation of the plate is shifted relative to the axis of rotation of the wind vane by the magnitude of its eccentricity and connected with it by gears.

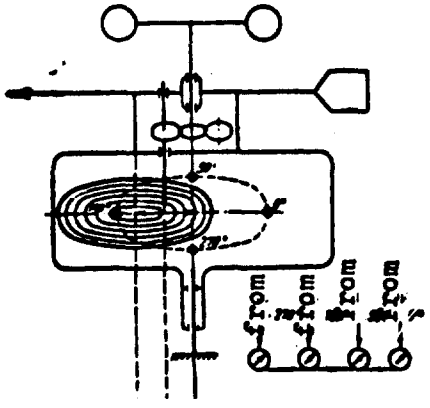

Fig. 1.

APPARATUS FOR MEASURING SPEED AND DIRECTION OF THE WIND. CLASS 42, N[illegible] 218551 [Announced by Scientific Research Institute of Hy[illegible]eteorological Instrument Manufacture (Nauchno-issledovatel skiy institut gidrometeorologicheskogo priborostroyeniya)]

Gulyayev, A. A., K. N. Manuylov, L. A. Shestopalov, and V. A. Yurchuk. (37)

An Author Certificate has been issued for an apparatus for measuring wind speed and direction, containing wind

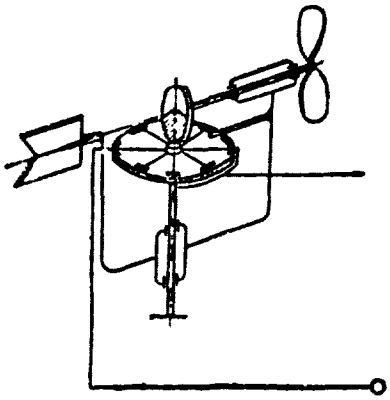

Fig. 1.

speed and direction receivers, a pulse former and an optical system (see Fig. 1). To automate the process of geometric summing segments of the path which the wind traverses in various directions during a determined period of time, the apparatus is fitted with a summer, made in the form of an elastic rod. One end of the rod is rigidly fixed, and the other end is connected, perhaps inductively, with the pulsed energy accumulators radially positioned around it. [Translation of patent abstract]

M-95 ANEMOMETER

Liyepa, E. Ya. (46)

The M-95 anemometer is intended for installation on port cranes, in fields, and other areas where there is a need for protecting equipment against high winds. The M-95 measures instantaneous wind speed, automatically determines dangerous wind speeds and gust duration, and turns on emergency protective devices. The unit is equipped with a three-bladed wind sensor and a device which gives light signals and a sound alarm. The M-95's specifications are as follows:

Instantaneous wind-speed measurement ranges -- 2 to 25 and 2 to 50 m/sec

Maximum error -- ±1.0 + 0.05 m/sec

Wind sensor threshold sensitivity -- 1.5 + 0.3 m/sec

Setting range for triggering mechanism -- 10 to 25 m/sec

Triggering-speed accuracy -- 3 m/sec

Setting range for gust duration -- 1 to 6 sec

Setting accuracy for gust duration -- ±0.3 sec

Line current -- 220 v, 50 cyc

Remote operating distance -- up to 100 m

Dimensions:
Wind sensor -- 280 x 250 mm
Control box -- 255 x 284 x 160 mm

Weight:
Wind sensor -- 1.2 kg
Control box -- 5.2 kg

Permissible ambient air temperature at 95 ±3% humidity -- from -40 to +50°C

Cost -- 150 rubles

Manufacturer -- Riga Experimental Hydrometeorological Instrument Plant

[LB]

CONVERSION OF SIGNALS FROM A BRIDLED-CUP ANEMOMETER

Torochkov, V. Yu. (67)

An electronic accessory to the M-27 bridled cup anemometer is described which indicates the average wind speed. The anemometer has multiple cups connected to a shaft which is restrained in its rotation by a couple of springs attached to the anemometer's housing. Because the angle of rotation is a linear function of wind speed, a potentiometer connected to the shaft generates an electric signal proportional to the instantaneous value of the wind speed. In the described accessory the signal from the anemometer is amplified and used to drive a small motor. The motor, in turn, drives an indicator of the average wind speed. The servo-loop is closed by a feedback element which transforms the displacement of the indicator into an electric signal. The use of the averaging accessory in conjunction with bridled cup anemometers increases the accuracy of the wind speed indication, as compared to that obtainable with rotating anemometers.

A DEVICE FOR REMOTE MEASURING OF WIND PARAMETERS. CLASS 42, NO. 206924 [Announced by Scientific Research Institute of Hydrometeorological Instruments (Nauchno-issledovatel'skiy institut gidrometeorologicheskogo priborostroyeniya)]

Manuylov, K. N., A. L. Zlatin, A. A. Gulyayev, M. Ya. Shapiro, Yu. V. Yermakov, S. M. Ryzhikova, G. S. Gershenzon, V. A. Yurchuk, D. Ya. Surazhskiy, I. N. Mogil'ner, L. A. Shestopalov, O. A. Volkova, and V. I. Dmitriyev. (48)

An Author Certificate has been issued for a device to be used in remote measuring of wind parameters. This device contains a set of wind receivers with a wind vane rigidly connected to the casing of the unit, a propeller with the moving part of the primary contactless pulse-type speed sensor attached to its axis, and a measuring unit with pulse counters (see Fig. 1). To increase the accuracy and reliability of this device by contactless conversion of the wind direction value into a phase shift between a series of pulses, the device is provided with two additional contactless pulse sensors. The moving part of these sensors is fixed to the horizontal gear of a pair of cone gears connecting the sensors to the propeller. To determine the mean wind direction, the set of wind receivers is supplied with an indicator showing the position of the wind vane. This indicator has the form of a magnetic half-ring attached to the casing and an immovable contact pair, while the measuring unit contains a logic circuit with a distributor electrically connected to the pulse sensor and to the contact pair. This arrangement automatically selects the datum for measuring the angles, interrelated to the state of the contact pair. To correlate automatically the wind direction with speed, the measuring unit contains a pulse generator connected to the primary speed sensor. The output part of this generator is connected to the pulse counter. [Translation of patent abstract]

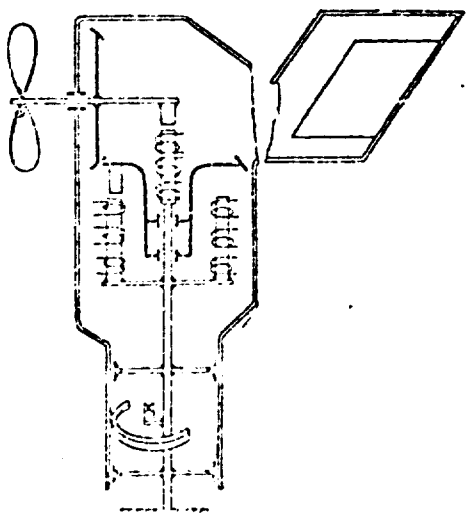

Fig. 1.

GYROSCOPIC ANEMORHUMBOMETER. CLASS 42, NO. 218553 [Announced by Moscow Engineering Institute of Geodesy, Aerial Photography and Cartography (Moskovskiy institut inzhenerov geodezii, aerofotos"yemki i kartografii)]

Torochkov, V. Yu. (68)

An Author Certificate has been issued for a gyroscopic anemorhumbometer consisting of three wind receptacles (each of which holds a wind vane which is connected to the outer frame of the gyroscopic apparatus and oriented at right angles to the other wind vanes), a protractor on the inner frame (connected to a moment meter on the outer frame). To measure the components of the mean wind vector colinear with the wind vane when its position is unchanging, the protractor, mounted on the axis of the outer frame of each wind receptacle, is connected to the moment meter, mounted on the axis of the inner frame. [Translation of patent abstract]

WIND SPEED-FIELD IN THE LAYER OF AIR OVER WATER

Yefimov, V. V. (73)

The method used on the 18th cruise of the R/V Mikhail Lomonosov to determine simultaneously wind speed in the layer of air over the water and wave height is described. Measurements were made with a special buoy consisting of a float and mast carrying wind-speed sensors. Rocking was minimized by using a counterweight attached to a universal joint. Vertical movement of the buoy was measured with a GM-16 wave gage which was suspended on a long cable. The float diameter was 120 cm, the height of float was 40 cm, the height of mast 3.5 m, and total weight of buoy was 110 kg. All electronic equipment was located on the ship and connected to the beacon by a 16-conductor cable. Special low-inertia, mechanical anemometers were used to measure wind speed. The housing 2 and the special bearings 3

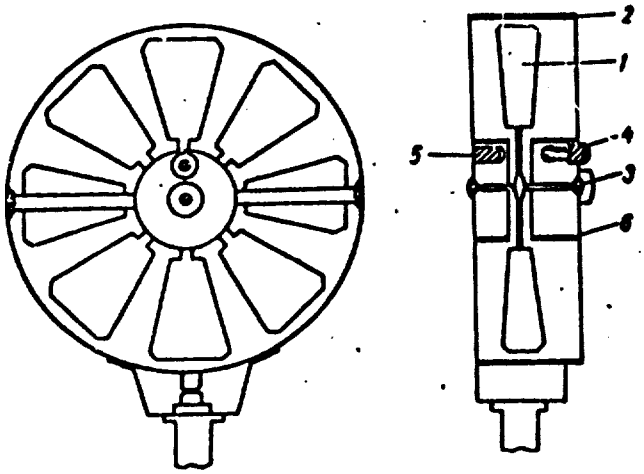

were taken from an ASC-3 windmill anemometer. A miniature tube 4 and an FD-3 photodiode were used to convert the number of revolutions of the vane 1 into electrical impulses. The ring 6 protected the photodiode against direct rays of the sun. Electrical impulses from the photodiode, the frequency of which was proportional to the measured wind speed, passed along the cable to the frequency meter. The current at the output of the frequency meter was then recorded on an H-700 oscillograph. The time constant of the anemometer was 0.4 sec, the dynamic range 2—15 m/sec, and the precision of measurement of wind speed in this range was 2%. Statistical processing of the curves recorded from the special buoy permitted computation of spectral densities of the waves and pulsations in wind speed at several different heights above the surface. The average values and distribution of wind speed at these heights were also determined. A high degree of correspondence was found between pulsations in wind speed and the spectral densities of the waves, some variations in correspondence being accounted for by waves due to swell. In order that large pulsations in wind speed not lead to errors in measurements, the time constant of the anemometer should be at least one order less than the period of wind waves.

ON THE POSSIBILITY OF MEASURING THE VELOCITY OF MOVING GASES AND LIQUIDS WITH THE AID OF A GENERATING SYSTEM WITH DELAYED ACOUSTIC FEEDBACK

Afinogenov, L. P., and M. V. Popov. (4)

The possibility of measuring mass flow and velocity of fluids with the aid of a self-sustained oscillating system with delayed acoustic feedback is considered. There are two ideas behind the method. The first is based on the fact that the velocity vector of acoustic wave propagation in a moving medium is equal to the sum of the velocity vectors of the medium and of propagation velocity for acoustic oscillations in the given medium. The second is based on the occurrence of self-sustained oscillations in a system consisting of an amplifier with feedback of the pure delay type. The basic unit of the measurement system is a generator whose frequency depends on the velocity of the medium. A generator of this type may have the form of an amplifier with electroacoustic feedback. The block diagram of the system is shown in Fig. 1. It consists of the following three elements: 1) electronic amplifier U; 2) acoustic radiator connected to the output

Best Available Copy

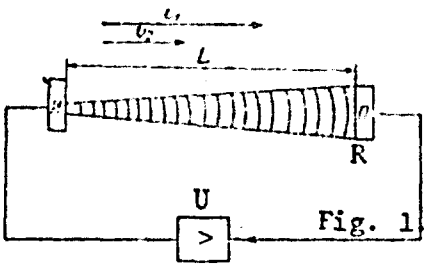

of the amplifier. The radiator converts electric oscillations into elastic oscillations (sonic, ultrasonic); 3) receiver R, which converts the oscillations of the medium into electric signals which are fed to the input of the amplifier. The following equation is derived for the frequency of oscillations

$$f = \frac{2\pi N}{2\pi L}(v_1 - v_2). \qquad (1)$$

This equation shows that a condition of phase balance may be satisfied by a series of frequencies f_1, f_2, f_3,... which are obtained if the numbers 1, 2, 3... are substituted into (1). The frequency of oscillations (for any N) is a linear function of medium velocity v_2. In a true system the self-sustained oscillations will have a complex form and will consist of the basic and higher harmonics. The form of the curve will be determined by the frequency characteristics and by the nonlinearity of the system. It is assumed that the nonlinearity is small in which case basic oscillations close to sinusoidal will occur:

$$f_1 = \frac{2\pi}{2\pi L}(v_1 - v_2). \qquad (2)$$

This relationship may be used as the operating principle of the device but this is associated with two inconveniences: 1) Equation (2) has the form

$$f_1 = a + bv_2.$$

It is more convenient when the free term is equal to zero, i.e.,

$$f_1 = cv_2. \qquad (3)$$

2) If the propagation velocity in a stationary medium varies this leads to an error

$$\Delta f = \frac{\partial f}{\partial v_1}\Delta v_1 = \frac{2\pi}{2\pi L}v_2 \Delta v_1. \qquad (4)$$

The above two shortcomings are eliminated by using a balanced circuit as shown in Fig. 2. The instrument contains two independent generating systems analogous to those shown in

Best Available Copy

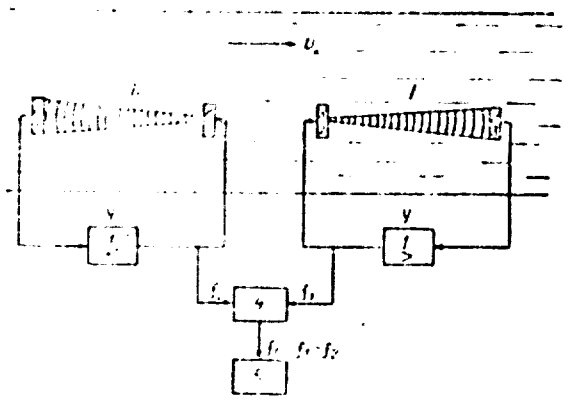

Fig. 2. Structure of the balanced scheme.

Fig. 1. The radiators 2 and receivers 3 of both systems are arranged in such a way that the acoustic waves in the medium are propagated in opposite directions. Then the frequencies of oscillations generated by systems I and II will be

$$f_1 = \frac{2\pi \cdot \bar{v}_m}{2\pi L}(v_1 + v_2);$$
$$f_2 = \frac{2\pi \cdot \bar{v}_m}{2\pi L}(v_1 - v_2). \quad (5)$$

Voltages at frequencies f_1 and f_2 are fed to a mixer and a difference frequency is taken from the output of the mixer

$$f_0 = f_1 - f_2 = \frac{2\pi \cdot \bar{v}_m}{\pi L} v_2. \quad (6)$$

This is the frequency which is fed into the measuring device 5. In the balance system the basic relationship (6) has the form $f = cv_2$ and the coefficient of proportionality c is independent of medium properties. If the number of periods is counted instead of measuring the frequency, the counter readings will be proportional to the mass flow

$$N = \int_0^t f_0 dt = \frac{2\pi \cdot \bar{v}_m}{\pi L} \int_0^t v_2 dt.$$

B. Cloud Height

REVIEW OF CEILOMETERS

Bozhevikov, N. S., and L. S. Shestopalov. (14)

A number of non-Soviet ceilometers and the Soviet RNGO Azbm ceilometer (see Fig. 1) are reviewed. The operating principles, design, advantages, and shortcomings of the units are discussed in some detail and a table is presented

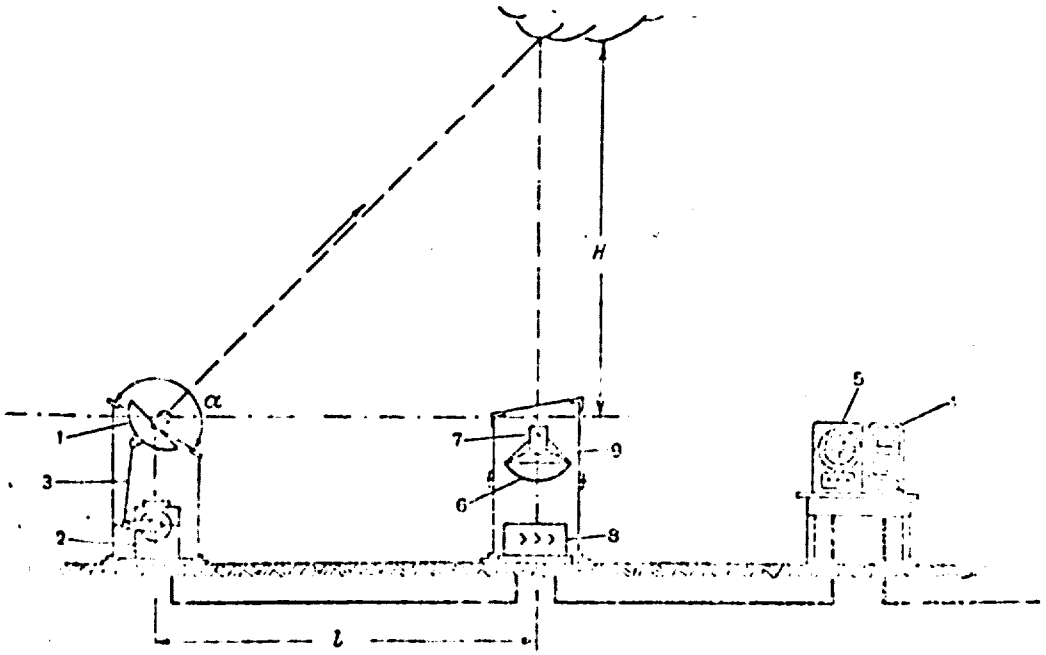

Fig. 1. RNGO A26m ceilometer

1 - Parabolic glass mirror; 2 - drivemotor reduction gear; 3 - four-link coupling; 4 - receiving selsyn; 5 - repeater; 6 - receiver mirror; 7 - photocell; 8 - narrow-band two-stage amplifier; 9 - selective optical filter.

showing the basic characteristics of 6 non-Soviet ceilometers and the RNGO A26m ceilometer. A breakdown of the characteristics of the A26m is given below.

Measurement range	50—500 m
Accuracy	±(8 to 5.7)%
Remote operation	100-m cable
Base (l)	200 m
Power consumption	2 kw
Measurements per minute	2
Light source	mercury tube
Tube output capability	2.2 kw
Tube output capability	10^4 stilb
Flash frequency	100 Hz
Service life	150—200 hrs
Reflector diameter	600 mm
Detector mirror diameter	450 mm
Recorder tape width	100 mm
Weight	260 kg

Dimensions:

Projector	0.98 x 0.82 x 0.78 m
Detector	0.65 x 0.65 x 0.93 m
Recorder	0.26 x 0.20 x 0.22 m

The sensing element in the detector is a cesium antimony photocell. Among the basic shortcomings of the A26m are the poor reliability of the motor and stylus, the high power consumption, and difficulty with voltage stabilization. [LB]

ORG: NIIGMP

PULSED-LIGHT CLOUD-HEIGHT INDICATORS

Bozhevikov, N. S., and L. S. Shestopalov. (13)

Pulsed-light cloud-height indicators presently in use in the Soviet Union and abroad are reviewed. The design and operation of the Soviet Oblako cloud-height indicator is described, illustrated, and compared with French (TNS, TNR, and TNE), Japanese (Jma-58), and Swedish (Defense Institute model) indicators. The measurement range of the Oblako system is 50—2000 m with an accuracy of 10% ± 5 m and 5% ± 50 m at the lower and upper ranges, respectively. Remote operation is up to 100 m with a power of 0.5 kwatt required. The light source is an ISSh-100-3 pulsed light with a flash length of 0.5 μsec, a flash frequency of 20 Hz, an instantaneous output of 10,000 kwatt, and a service life of 5 hr. An FEU-1 photomultiplier is used as the receiver and the number of measurements made is four. The diameter of the parabolic mirror in both the projector and receiver is 350 mm. The distance between the projector and receiver is 8—10 m and the total weight is 250 kg. An attachment, the IP-IV, which extends the remote operating capability up to 10 km is available for this system. When using this attachment, the power required goes up to 0.6 kwatt. The IP-IV also provides permanent recording on strip chart. Block diagrams and photos of some of the units discussed in the article are shown. [LB]

ORG: NIIGMP

INCREASING THE USEFUL LIFE OF THE MECHANISM OPENING AND CLOSING THE LIDS OF THE "OBLAKO" DEVICE

Sof'in, V. K., and G. M. Fedorov. (63)

A method for increasing the useful life of the mechanism opening and closing lids on the "Oblako" device is presented. The method consists of replacing the worn-out lever and exposing heretofore unused teeth on the large gear by turning this gear through 6 cm in the clockwise direction. To insure a proper fit for all holes on the large gear, the position of teeth is marked on a piece of stiff paper template while the gear is in the original position. Next, the paper template is turned through 6 cm in the counterclockwise direction, and the new position of the holes is marked out on the gear. After drilling the new holes, the lid-lifting mechanism is reassembled. A schematic of the mechanism is presented (see Fig. 1). It was found that the operation could be repeated 5—6 times, thus prolonging the useful life of the device by a like factor.

ORG: UGMS TsChO

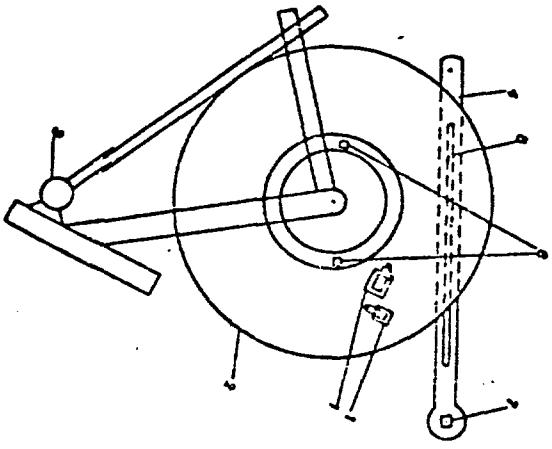

Fig. 1. 1 - Dampers; 2 - gear; 3 - electric motor; 4 - lever arm; 5 - crank pin; 6 - terminal switch; 7 - square axle.

SCHEME FOR CONTROLLING THE POSITION OF LIDS ON THE "OBLAKO" DEVICE

Sorokin, A. I. (64)

To insure proper control of the lid position, viz., "open-closed," on the "Oblako" device, the switching scheme shown in Fig. 1 is proposed. The switch P3 is replaced by a double pole six-contact switch. The contacts 1 and 6, 3 and 4, 7 and 12, 9 and 10 are connected to lead 83 and contacts 7 and 12 are connected by a separate lead to the fourth pin of the ShR3 transmitter connector. Contacts 3 and 4 are connected to lead 13. Signal lamps of type DN26 x 0.15 and damping resistors PEV-20 (2400 ohm) or neon lamps of type MN-3 and corresponding damping resistors of between 500 ohm to 2 Mohm are connected between contacts 2 and 5 and 8 and 11. The scheme is arranged in such a way that after throwing switch P2 to the "on" position and putting P3 in the "up" position, the lids begin to open. When the lids are completely open, both signal lamps light up. When the PR switch is turned to the "down" position, the lids begin to close and the lights go out. On complete closing, the lights go on again. The device is switched off by putting switch P3 in the middle position and toggle switch P2 in the "off" position.

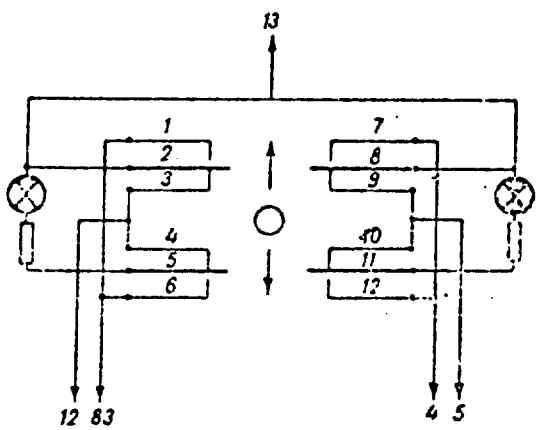

Fig. 1. A circuit for opening and closing the lids of the "Oblako" device.

ORG: Yakutsk UGMS

VISIBLE INDICATION OF THE NONSTABLE PERFORMANCE OF THE PHOTOMULTIPLIER IN THE OBLAKO UNIT

Fedorovich, F. N. (28)

The irregular, saw-tooth signals observed on the screen of the "Oblako" device used for determining cloud height were traced to a malfunctioning FEU-1 photomultiplier tube.

When the faulty tube was replaced by a good tube, the irregular signals disappeared. It is concluded that the interpretation of the irregular signals, advanced by some observers as being due to snow or fog formations, is erroneous.

ORG: UGMS Krasnoyarsk

C. Temperature

AUTOMATIC THERMOMETER

Bogachev, E. Yu., A. V. Goreleychenko, S. P. Semenov, Ye. I. Sheyman. (12)

An automatic recording thermometer was designed for determining water temperatures of lakes and seas. This device consists of a PTS-500 platinum resistance thermometer, a dc bridge, a numerical impulse coder and decoder, a null indicator, and a recorder. A photograph of the complete instrument is given, and schematics of the principal elements of the instrument are presented in Fig. 1. This instrument was

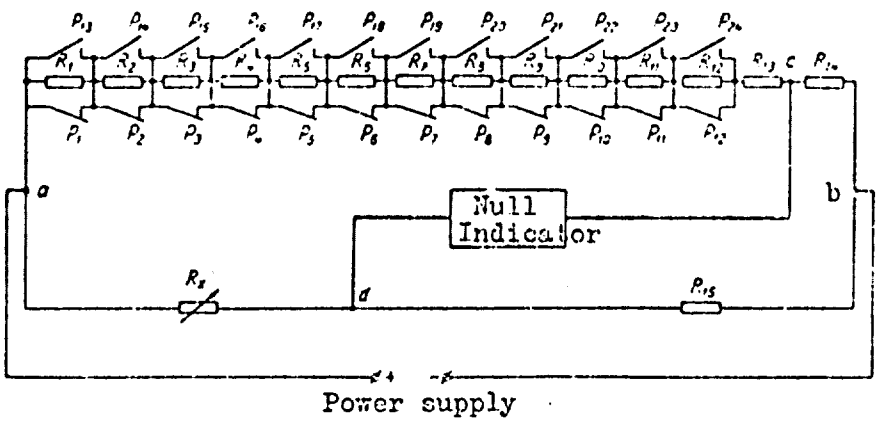

Fig. 1. Schematic of the measuring and coding elements

tested in May—July 1966 on Lake Valdaysk and gave readings with a maximum error of ±0.3C and average error of ±0.2C. It may be used for measuring air temperatures in the region of ±50C.

RESULTS FROM AN EXPERIMENTAL INVESTIGATION INVOLVING THE DEPENDENCE OF THE ACCURACY OF AIR TEMPERATURE MEASUREMENTS ON THE PARAMETERS OF THE THERMORESISTOR AND TEMPERATURE UNIT IN THE RADIOSONDE

Arbuzova, V. N., Yu. A. Glagolev, M. V. Krechmer, and L. F. Tormoz. (7)

A new temperature-sensitive unit for use on RKZ type radiosondes was designed and is shown schematically in Fig. 1.

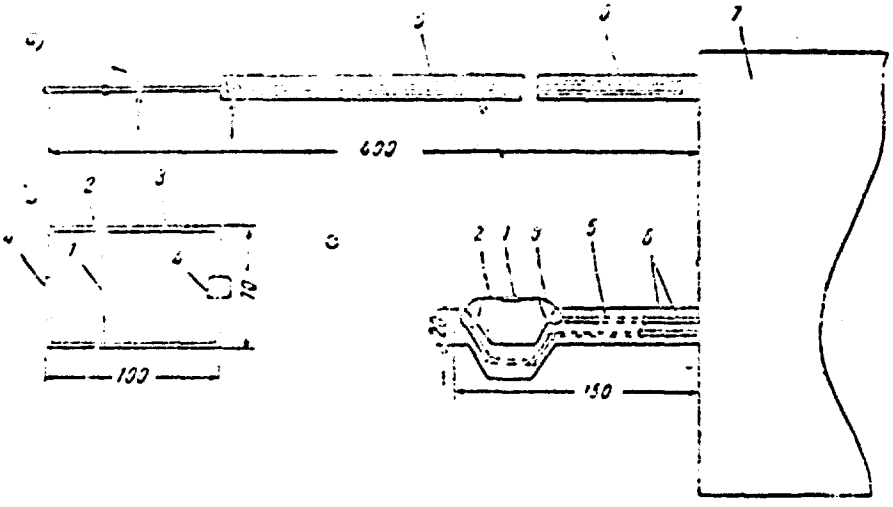

Fig. 1. New and old thermal units for net-like radiosondes of RKZ type.

a) Side view of new unit; b) top view of frame of new unit; c) side view of old unit. 1 and 2 - housing of thermoresistor and electrical thermoresistor leads; 3 - holders (silver-plated steel wire, 1 mm); 3' - petals; 4 and 4' - insulators; 5 - bracket; 6 - electrical leads; 7 - instrument housing.

The performance of this unit was compared with that used on RKZ-1 and A-22 radiosondes in experiments carried out in September 1965. The measuring accuracy of the new thermal unit at elevations of 20—30 km was 4—4.5 times that of the unit used in A-22 radiosondes.

ORG: Central Aerological Observatory (Tsentral'naya aerologicheskaya observatoriya)

HIGH-SENSITIVITY BIMETALLIC ELEMENT FOR TEMPERATURE MEASUREMENT

Chentsov, L. A. (USSR)

The design of a bimetallic temperature sensitive element is discussed. The element is shaped like a double helical spring 1 (Fig. 1) suspended in the bracket 2. A pointer 4 is attached to the center of the spring, while the bracket is fastened to the housing 3. Both the spring and the bracket are made of a bimetal. An analysis by the author produced an expression for the transducer constant of this sensor:

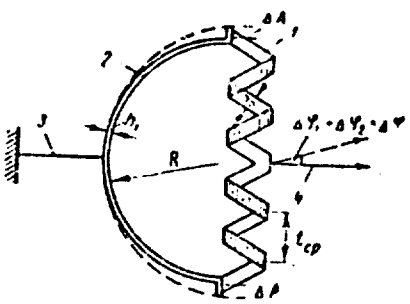

Fig. 1.

$$\beta = \frac{3}{2}\pi d n M\left(\frac{1}{h_r} + \pi K \frac{n \operatorname{tg}^2 \alpha}{h_c}\right).$$

where d is the mean diameter of the spring coils, n is the number of coils in one direction, M is the sensitivity constant for bimetal, h_r is the thickness of the bimetal strip in the spring, h_c is the thickness of the bimetal strip in the bracket,

$$K = \frac{1}{1 + K_r/K_c},$$

K_r is the coefficient of spring stiffness during extension, K_c is the coefficient of bracket stiffness during bending, α is the pitch angle of the spring coils. The experimental sensor had a sensitivity of 0.47 angular degrees/°C. An extensive experimental evaluation of the temperature sensor confirmed theoretical performance data. Much of these data are included in the paper as are the mathematical derivations of the transducer constant and the stiffness coefficient K as functions of the sensor's design parameters.

SOME RESULTS OF THE DEVELOPMENT OF A TECHNIQUE FOR MEASURING THE TEMPERATURE OF HIGH LAYERS OF THE ATMOSPHERE USING MICROTHERMISTORS

Zulanova, L. K., G. A. Kokin, S. P. Petrov, and V. Ya. Rusina.

Preliminary results of laboratory experiments are presented for the thermal, physical, and aerodynamic characteristics of bead microthermistors (TR) used in meteorological rockets for temperature measurements in the upper atmosphere. The experiments were carried out on four TR each having the approximate form of an ellipsoid of revolution with major and minor axes of 280 and 190 μ and having a glass coating several microns thick. The leads are 0.86 cm long with a diameter of 30 μ. The results are used to evaluate the importance of each of the terms in the expression

$$T_T = T_\infty \left(1 - r_T \frac{\gamma - 1}{2} M_T^2 - \frac{\Sigma Q_R}{hST_T} - \frac{\sigma \varepsilon T_T^4}{h} - \frac{Q_J}{hST_T} - \frac{Q_\xi}{hST_T} - \frac{c_T}{hST_T} \frac{dT_T}{d\tau}\right),$$

under conditions of a typical rocket sounding. Here T_∞ is the atmospheric temperature, T_T is the TR temperature, r_T is the TR thermal recovery coefficient, $\gamma = \frac{c_p}{c_v}$ is the ratio of specific heats for air, $M_T = V_\infty / \sqrt{\gamma R T_T}$ is the Mach number reduced to the TR temperature, V_∞ is the velocity of the unperturbed flow, R is the gas constant for air, ΣQ_R is the total radiation energy absorbed by the TR, h is the TR convective heat exchange coefficient, S is the TR surface area, ε is the TR radiation coefficient, σ is the Stefan-Boltzmann constant, Q_J is the Joule heat developed in the TR, Q_ξ is the heat transferred to or from the TR through the leads, and c_T is the TR specific heat. In the calculations the TR is approximated by a sphere with a diameter of 300 μ. It is found that under typical sounding conditions:

$$\frac{\Sigma Q_R}{hST_T}_{max} \simeq 2.1 \cdot 10^{-3}$$

and can be neglected; $r_T \frac{\gamma - 1}{2} M_T^2 \simeq 0.13$ and must be considered for $V_\infty > 100$ m/sec; $\frac{\Sigma Q_R}{hST_T} \simeq 10^{-3}$ at 40 km and must be considered for altitudes greater than 35—40 km; $\frac{\sigma \varepsilon T_T^4}{h} \simeq 4.2 \cdot 10^{-3}$ at 40 km, but increases by a factor of 10 at 60 km and should be considered at altitudes above 40 km; $\frac{Q_J}{hST_T} \simeq 0.11$; $\frac{Q_\xi}{hST_T} \simeq 0.03$. Details of the experimental determinations of the TR characteristics are discussed.

ON THE COMPENSATION FOR THE RESISTANCE OF LEAD WIRES USED WITH AN UNBALANCED BRIDGE

Bespalov, D. P., and G. M. Romanova. (10)

The possibility of using a 3-wire circuit with an unbalanced bridge for the partial compensation of changes in the resistance of leads, is considered. A circuit is proposed for a multiple range installation used to measure and telemeter soil temperature over a distance of 100—200 m and containing the best compensation for the resistance of the lead wires. The elements of the circuit adopted in the production model of the M-54-1 installation are computed. The 3-wire circuit for measuring temperature with the aid of an unbalanced bridge is shown in Fig. 1. Analytical expressions are derived for the optimum values of the circuit elements. The M-54-1 equipment makes it possible to measure soil temperature at 10 depths with an accuracy of 0.1°C. Each of the 10 thermometers is connected in series to the arm of an unbalanced bridge to measure the resistance. Type M-117/3 50-0-50 galvanometer with scale graduations of approximately 0.1°C is [illegible] in Fig. 2. The circuit offers a high degree of compensation for changes in the resistance of leads. It also decreases the number of resistance values which must be used in the bridge. In place of 11 different resistances used in the M-54 instrument, the new instrument uses only 2 values: 3 resistances (R_1, R_2, R_3) at 290 ohms each and 8 resistances (r_1, r_2, r_3, ... r_8) at 10.0 ohms each. The improved hermetic sealing of the sensing thermometer, introduced in August 1965 by the Safonovsk Plant of Hydrometeorological Instruments, has substantially increased the reliability of the M-54-1. This has been confirmed by tests carried out at the plant.

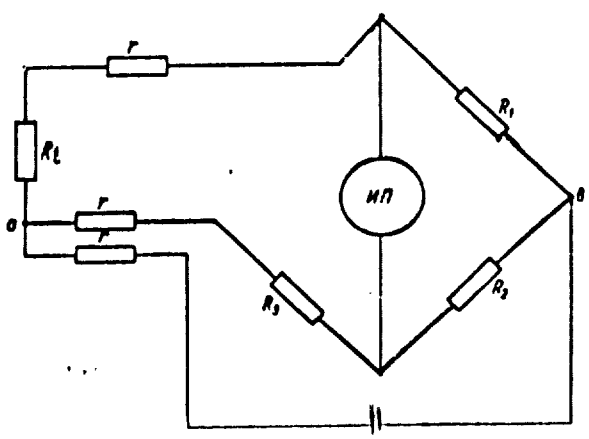

Fig. 1. 3-wire system of an unbalanced bridge used to measure temperature.

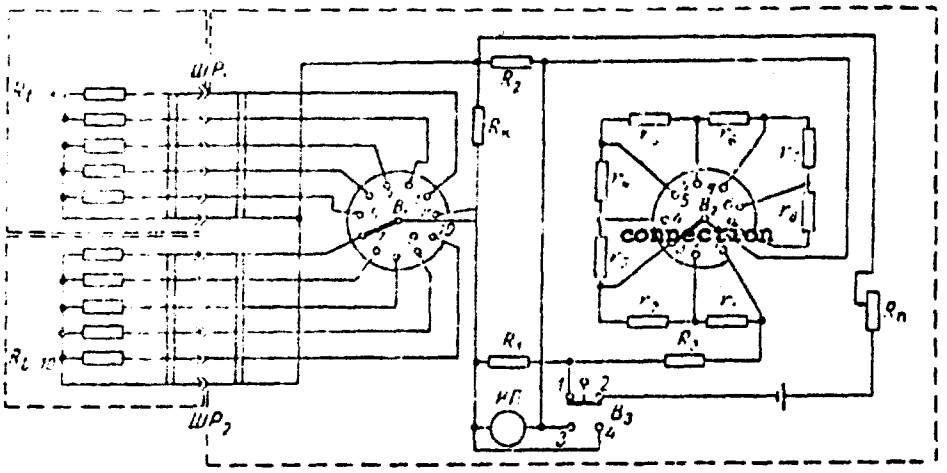

Fig. 2. Electric circuit for a multirange unbalanced bridge with a 3-wire connection of thermometers.

D. Meteorological Radar

APPARATUS FOR STUDYING THE SPACE-TIME CHARACTERISTICS OF METEOROLOGICAL RADAR RETURNS

Fedorov, A. A., and G. B. Brylev. (27)

Due to the extreme variability of the space-time characteristics of radar returns from clouds, areas of precipitation, and clear sky, equipment is needed for the simultaneous reception of micro- and macro-physical radar return characteristics on two wavelengths at various points within the weather phenomenon in question; the authors have described a device for this purpose which has the following capabilities: 1) return signal amplitude can be recorded at average time intervals (μsec to sec); 2) the amplitude of return signals from various three-dimensional segments of the same cloud on a single frequency can be recorded simultaneously; 3) amplitude recording on two frequencies of returns for identical ranges. The partially-transistorized device is based on the time selection principle; the video frequency signals are recorded on automatic equipment of various types. The circuit diagram contains eight variable-delay selector

Best Available Copy

switches between sequential selector networks. These delay circuits provide a working range capability of from 600 m to 300 km; the smallest operable interval is 1 μsec (150 m). The instrument includes a 13-loop N-700 loop oscillograph and an EPP-09 automatic multichannel recorder. The device is calibrated with a standard signal generator. By substantially increasing the real-time radar data flow, the apparatus described in this paper can be used to: 1) conduct simultaneous measurements of instantaneous and average return signal values on two wavelengths; 2) study the time-space characteristics of radar returns on one or two frequencies from a volume of space limited by radiation pattern beamwidth and scanning pulse duration; 3) investigate time-space variations in simultaneous radar returns from various areas of the same cloud or precipitation zone on a single frequency (with eight range options) or on two frequencies (with four range options).

AUTOMATIC SPACE-SCAN MECHANISM FOR METEOROLOGICAL RADAR

Alekseyeva, L. V., V. M. Mogidson, G. L. Nizdoyminoga, P. N. Nikolayev, and I. N. Udalov. (5)

The authors describe a new type of control device for use with the antenna electric drive system of a meteorological radar which permits a spatial segment of interest to be scanned according to a preset program. Analysis based on the Soviet MRL-1 meteorological radar indicates that for present-day limits on antenna beamwidth and rotating speed (slewing rate), and antenna control of this sort is best programmed for two scanning patterns. At ranges up to 40 km, it is recommended that vertical sections be scanned in a limited number of azimuths, which are determined at the discretion of the operator based on the actual weather picture. A 40-km zone can be swept in this way in about 2 min. From 40 to 300 km, circular scanning is employed for cloud-cover observations; the zone can be scanned in 5 min for altitudes up to 16 km. Some of the technical considerations affecting the design of certain elements and subsystems of this type of antenna steering mechanism (beam azimuth and elevation controls) are discussed. Azimuth slewing is accomplished by continuous circular rotation of the antenna, with simultaneous stepping in the vertical plane (the step angle is set by one of four discrete working modes) on every second azimuth sweep. Similarly, elevation-angle steering is accomplished by making the antenna search continuously from

0° to 90°, traversing at the top and bottom of the search by an angular increment determined by the mode selected. The logic circuit, pulse shaper, and commutator used in this antenna control system are described in some detail.

MRL-1 METEOROLOGICAL RADAR (49)

The MRL-1 radar unit was designed to provide information on cloud systems (storm, rain, etc.) both horizontal and vertical extent, evolution, speed, movement within a 300-km radius, shape, boundaries, interlayers, as well as on the nature of precipitation within a 40-km radius. The unit is based on irradiation of meteorological formations with shf pulses and obtaining visible radio echo (on screens) whose characteristics are related in a specific manner to the microstructure of the clouds and precipitation. The measuring equipment and specifications are described in detail. [LD]

E. Radiosondes

EXTENDING THE RANGE OF THE "METEOR" STATION IN RECORDING THE DISTANCE TO A RADIOSONDE

Devyatov, Yu. A., and A. P. Murav'yev. (20)

A modification of the "Meteor" radar station is proposed so that it can determine the range of radiosondes at a distance greater than 150 km. The modification which requires only an addition of switch B1' is shown in Fig. 1. After the circuit has been modified it operates in the following manner: 1) When the range is not more than 150 km, B1' is in position 0—150 km and the circuit operates in the conventional manner. 2) When the range exceeds 150 km the operator places B1' into position D + 30 km and sets the scale to 120 km and superposes the dark sight with the interval between signals from the radiosonde. Under these conditions the system continues to record the range and data from the radiosonde but the recorded range should be increased by

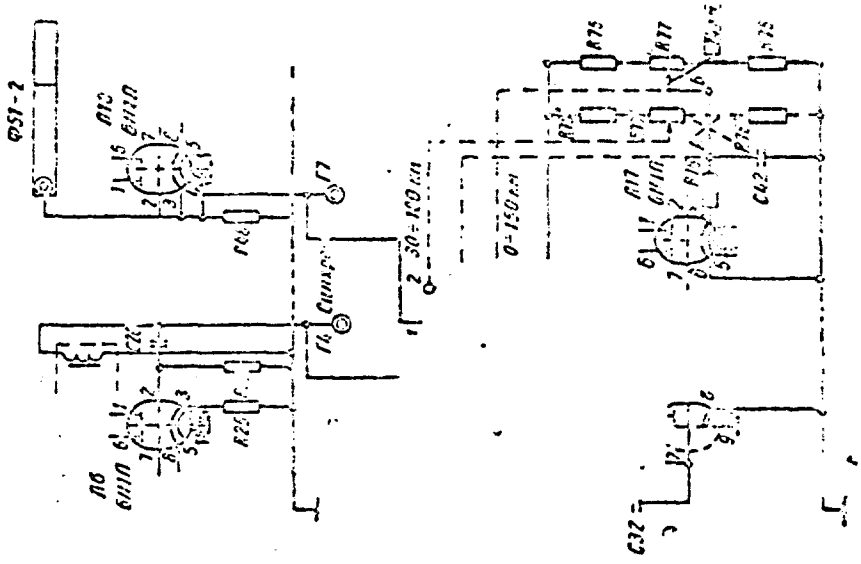

Fig. 1.

30 km. 3) When the range is greater than 180 km, B1' is in position 0—150 km while the range scale is in the 0 position. The recorded range is increased by 180 km.

ORG: Verkhne-Volzhskoye UGMS

AEROLOGIC RADIOSONDES

Trifonov, G. P. (69)

Generalities on Earth's atmosphere radiosounding are set forth. A Soviet-made RKZ-1—RMS-1 radiosounding system is briefly described. This system consists of an RKZ-1 sonde and an RMS-1 radar meteo station and uses radar means for ranging. Meteo-element values are transmitted by a pulse-frequency code. The RKZ-1 comprises: a temperature sensor, a humidity sensor, a baroswitch, a radio unit, and a 200PMKhM-2ch battery. The radio unit converts sensor resistances into pulse frequencies, responds to interrogations, and transmits meteo data over a radiochannel. The radio unit includes a phantastron oscillator (2P29P tube) which produces pulses with a repetition frequency of 100—2300 Hz, an 800-kHz oscillator (2S3A tube) ensuring superregeneration, and a carrier-frequency superregenerative oscillator (6S21D tube) for responding to radar signals.

ORG: Central Aerological Observatory, Moscow (Tsentral'naya aerologicheskaya observatoriya, Moscow)

RK2-TYPE RADIOSONDE (53)

The RK2-type radiosonde was designed for measuring temperature, pressure, and relative humidity, as well as for determining wind direction and velocity in the free atmosphere (see Fig. 1). The operation is based on converting the measured values of meteorological parameters to a number of electric pulses which, acting upon the transmitting section of the device, terminate for a short time the supergenerator's radiation, forming intervals. The internal repetition frequencies are then received and recorded by surface radar. The temperature is taken by a thermal resistor, the humidity is measured on organic film, and the pressure is measured by aneroid boxes. Information on temperature, relative humidity and atmospheric pressure is transmitted by the radiosonde in the form of radio signals which are received by radar for bearing and automatic observation from angular coordinates and range. The parameter measurement ranges are as follows: pressure—1060 to 5 millibars; temperature—50 to -80°; and relative humidity—100 to 10%. The carrier frequency is 1782 ± 8 mHz. The weight of the radiosonde with batteries is 1500 grams and its dimensions are 218 x 196 x 130 mm. [LD]

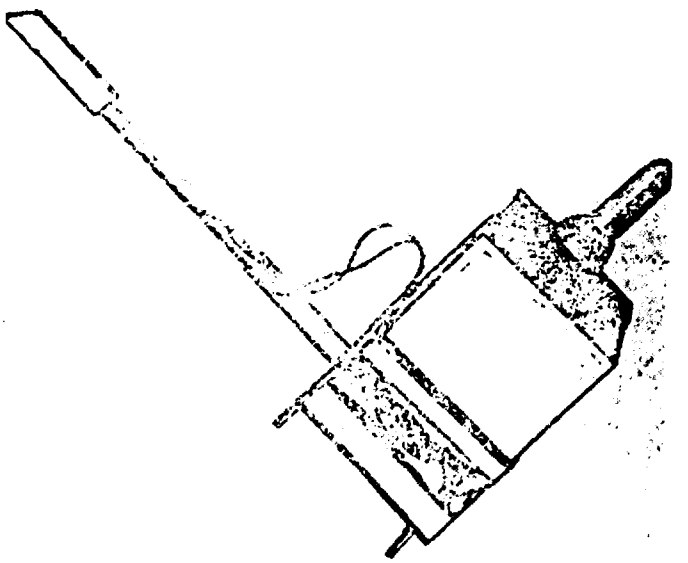

Fig. 1. RK2-type radiosonde.

F. Visibility

RDV-1 PHOTOELECTRIC TRANSMITTANCE METER (52)

The operating principle and design of the RDV-1 photoelectric transmittance meter (see Fig. 1) are described.

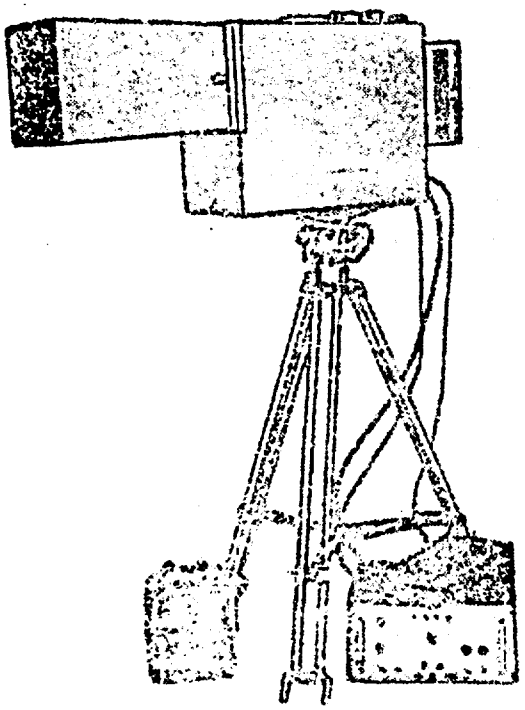

Fig. 1. RDV-1 photoelectric transmittance meter.

The meter operates on the principle of the equalization of two light beams, one of which passes through the atmosphere and is reflected back to the cathode of a photocell. The other beam passes through an optical system within the instrument to the same cathode. Variations of the light flux of the second beam are accomplished linearly with a special diaphragm. Recording of the meteorological range takes place automatically when the flux of both beams is equalized. The RDV-1 consists of a prismatic photometric reflector, a recorder with remote control of the two identical measuring units, a power source, a voltage stabilizer, an autotransformer used with a 127-volt line, and two metal tripods. The optical system is mounted in the photometric-unit casing. The optical system shapes the two light beams and regulates one of them. The prismatic reflector is set up 100 m from the photometric unit. The meteorological range measurement limits are from 250 to 6000 m, with a corresponding transmittance of 6 to 90%. The basic photometric error does not exceed 2%. The meter uses 220/127-volt, 50 Hz line current. Power requirements with and without warmup are 550 and 300 watts, respectively. The RDV-1 is capable of operating in an ambient temperature from -50° to +50° and 100% humidity. The entire unit weighs 200 kg. [LB]

THE INSTRUMENTAL OBSERVATION OF VISIBILITY USING THE M-53 and M-71 INSTRUMENTS

Savikovskiy, I. A., and M. A. Gol'berg. (58)

A few remarks are presented concerning experience in the operation of M-53 and M-71 instruments. The instruments are not defined or described in the article. The authors

state that there are two reasons for shortcomings in the operation of the above instruments. One of these is that the instructions are not followed and the other is that preventive maintenance is not carried out systematically. The authors review some of the statements contained in the instruction books for the instruments. The adjustment of the M-53 instrument must include a check of the mechanical and optical system in accordance with the instructions. The check of the null position must be carried out at the station as well as the repair shop. The check may be carried out using a simplified method without special black screens. Once every three months it is necessary to examine the black screens and if necessary to touch them up with black paint. The case of the M-71 instrument must be dusted and cleaned once a week. Every three months the measuring device and the transformer must be checked. This includes the following operations: a detailed external examination, an examination of the electrical wiring, an examination oftthe cover, an examination of various screws to make sure that they are tight. It is concluded that if the instrument is properly used and maintained it is capable of giving high quality visibility readings.

G. Pressure

HIGH ACCURACY LIQUID MANOMETER

Nipomnyashchiy, S. I. (50)

A high-accuracy liquid manometer was developed in which dibutylphthalate is used instead of mercury. The instrument is shown in Fig. 1. It consists of a U-shaped tube 1, control

Fig. 1.

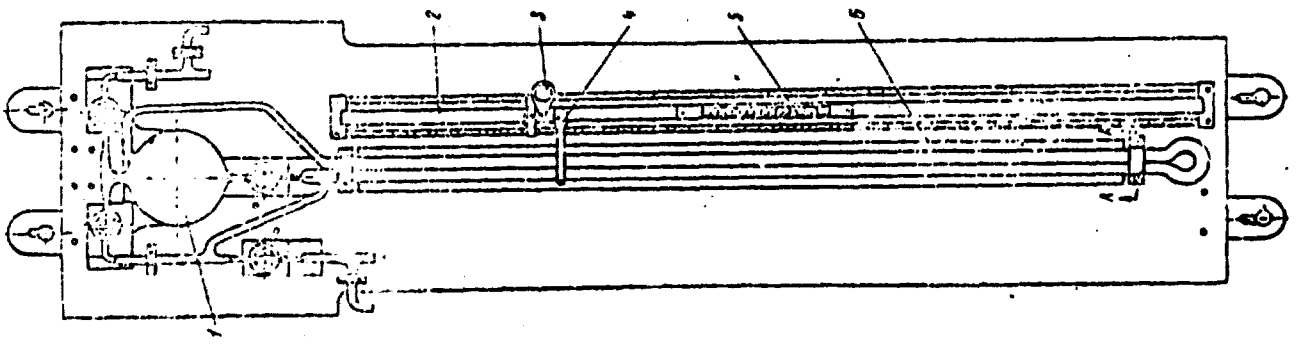

scale 2, readout device 4 with magnifying glass 3. The right arm of the U-tube is evacuated to approximately 10^{-2} mm Hg. The vacuum is monitored by a thermocouple vacuum gauge. Since the density of dibutylphthalate is 13 times less than mercury, the accuracy of the read-out is approximately 10 times higher. The measurement range of the instrument is 0—70 millibar, accurate to 50 m at an altitude of 20 km.

A PRESSURE TRANSDUCER USED IN THE COMPENSATION METHOD OF MEASURING ATMOSPHERIC PRESSURE

Karpusha, V. Ye. (39)

The design of an atmospheric pressure transducer based on the compensation method of measurement is described. Measurement errors of the transducer are analyzed and the parameters of the transducer are computed. The static and dynamic characteristics of the transducer are computed and test results are discussed. The schematic of the pressure transducer is shown in Fig. 1. A lever on an elastic support

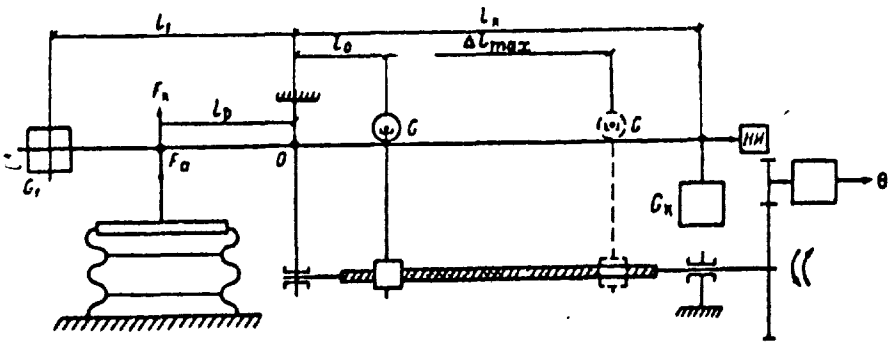

Fig. 1. Basic kinematic scheme.

and with unequal arms is used as the arrangement for comparing the acting forces. The force developed by a bellows is applied to one arm while the compensating moment is produced by the total weight of two loads; a stationary load and a load which is displaced along the opposite arm (G). The atmospheric pressure P acting on the bellows develops a force F_a. A counterforce F_k produced by the weight G_k is applied to the rigid center of the bellows. This counterforce is equal to the force P_0S_0 for a particular selected atmospheric pressure P_0. When the atmospheric pressure deviates from P_0 a force ΔF occurs and this force is further measured. The force ΔF developed by the bellows when the atmospheric pressure

deviates from B_0 causes the rigid center of the bellows to be displaced by h. Since the balance beam of the scales is connected to the rigid bellows center it is deflected by a certain angle and displaces the core of a differential induction sensor. This in turn generates an unbalanced voltage at the output of the null device (NI). This signal is fed to an automatic system which consists of an amplifier, a motor with a reducer and a lead screw which displaces the measurement weight G. The direction of motor rotation is determined by the phase of the unbalanced signal and is selected in such a way that when the measurement weight is displaced along the balance beam, an opposite force equal to the bellows force ΔF is generated. When the two are equal the position of the weight determines the value of the measured force. This position is determined by the angular displacement of the lead screw θ. The individual elements of the transducer are described in detail. The linearity of the transducer scale is discussed. Equations are developed for the scale of the transducer and serve as a basis for the adjustment and calibration of the transducer. Errors produced by temperature changes, changes in the acceleration due to gravity, changes due to the flexure of the balance beam, and changes due to the elongation of the elastic suspensions are analyzed. The static and dynamic characteristics of the transducer and the gain of the amplifier are determined. The following conclusions are reached concerning the accuracy of the transducer: 1) The error produced by the transducer is equal to ±0.18 millibars. This also includes the dynamic error due to different dynamic characteristics of the transducer and of the control device and error due to differences in the time required to carry out measurements with the two transducers. 2) The actual accuracy of the transducer is greater than the accuracy obtained in making the above comparisons.

H. Humidity

A HYGROMETER WITH THERMOELECTROLYTIC SENSING ELEMENT

Usol'tsev, V. A. (72)

Current methods of measuring atmospheric humidity are reviewed and summarized. The thermoelectrolytic hydrometer is selected as most promising, and a specific model is

described. The general view of this hygrometer is shown in Fig. 1, and the internal arrangement is shown in Fig. 2.

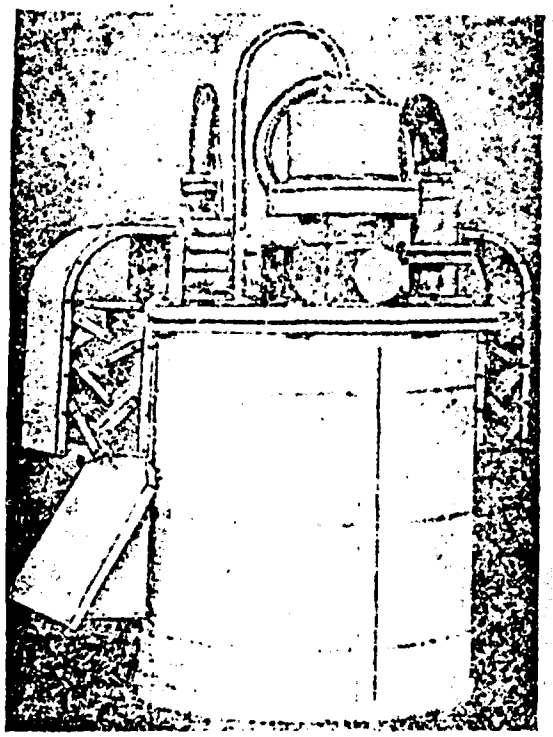

Fig. 1. General view of thermoelectrolytic hygrometer.

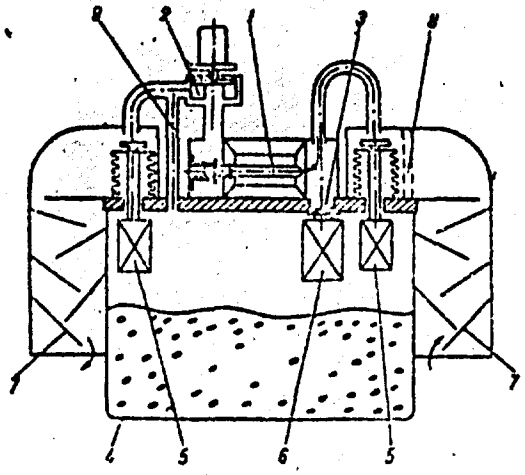

Fig. 2. Internal arrangement of thermoelectrolytic hygrometer. 1 - Sensing element; 2 - ventilator, allowing passage of air at any desired rate; 3 - opening between measuring chamber and (4) hermetically sealed tank containing zeolites (moisture absorbing); 5 and 6 - electromagnetic devices for opening and closing valves to (2) and (3); 7 - filter for coarse particles; 8 - secondary filter of nylon (Kapron) screen; 9 - narrow tube for returning air to tank with zeolites.

The properties of thermoelectrolytic sensing elements are investigated, and phenomena associated with changes in crystallographic state of the salt in the sensing element are described: the form appears to be $LiCl \cdot 3H_2O$ below -16C, $LiCl \cdot 2H_2O$ between -16 and 19C, $LiCl \cdot H_2O$ up to 94C, and simply LiCl above 94C. The hygrometer may be set up in ground hydrometeorological stations for automatic operation. It has a number of fundamental advantages over known domestic and foreign hygrometers. In particular, this instrument permits humidity measurements at low temperatures, down to -30C, with an accuracy within 0.5° of dew point, and it may be operated without supervision for extended periods of time. It was found suitable to use a control arrangement based on the two-temperature method for testing the sensitive

element over a wide temperature range. The calibration at low temperatures obtained in this way confirms tests in a heat chamber in which the humidity was determined by means of a thermal psychrometer, which permitted measurement of psychrometric temperature differences with high precision.

DEVICE FOR REGULATING THE M-39 FILM HYGROMETER

Ugrenimov, I. T. (71)

A device for adjusting the indicator needle of type M-39 film hygrometer is presented (see Fig. 1). The device uses a regulating screw similar to the one on MV-1 hair-type hygrometers. The device ensures fast and safe adjustment of the indicating needle without damaging the sensitive film and may be installed rapidly without altering the basic design of the hygrometer.

ORG: UGMS Estonian SSR (UGMS Estonskoy SSR)

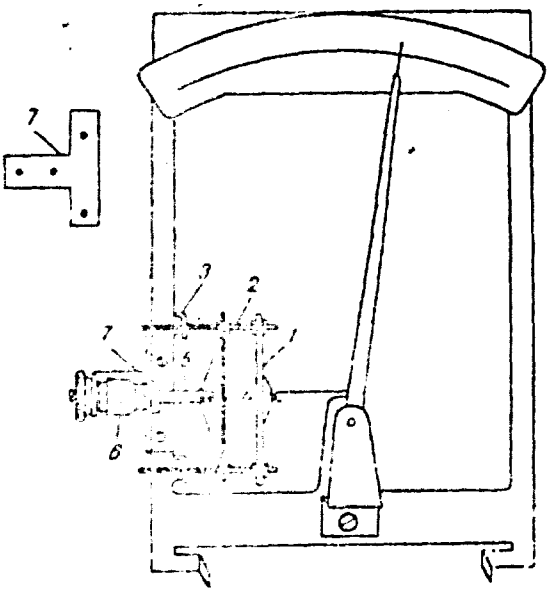

Fig. 1. Schematic of regulating device. 1 - Diffuser; 2 - pivot pins; 3 - meter supports; 4 - plate; 5 - pull rod of adjusting screw; 6 - adjusting screw from MV-1 hair-type hygrometer; 7 - special bracket.

Best Available Copy

I. Water Level

ACCURACY OF MEASUREMENT AND METHODS OF CALCULATION OF A FLOATING LEVEL GAGE

Dimaksyan, A. M. (22)

Errors encountered in determining levels of liquids by a floating level gage are analyzed, and the results are applied to the measuring scheme shown in Fig. 1. The effects

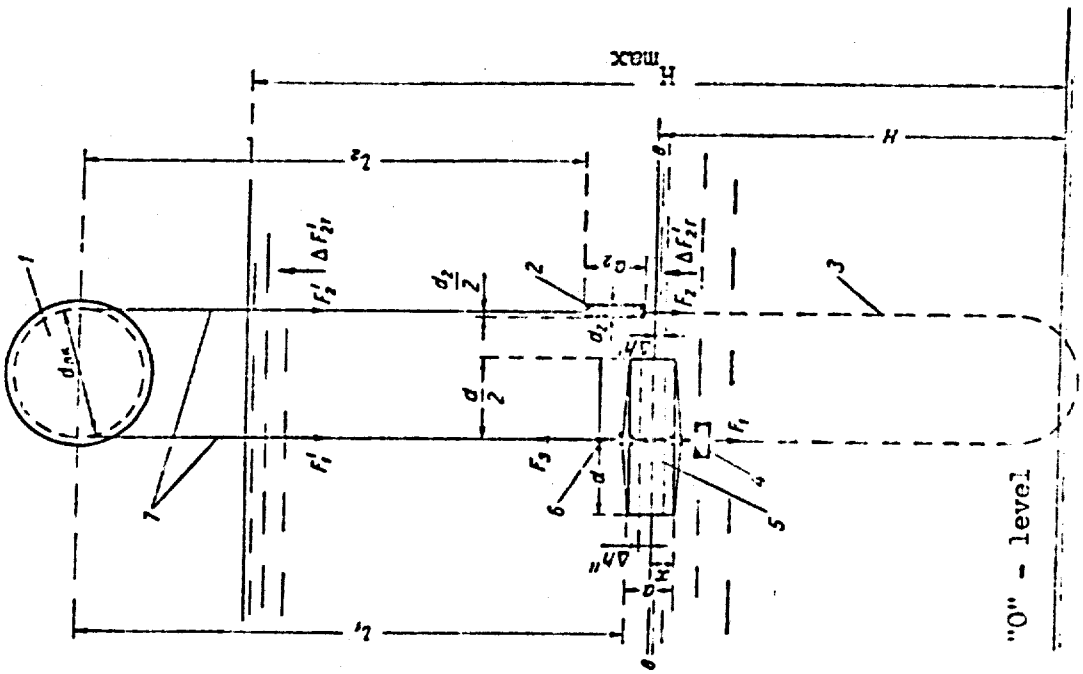

Fig. 1. Principal scheme of floating level gage. 1 - float wheel; 2 - counterweight; 3 - loop; 4 - additional float weight; 5 - float; 6 - armature; 7 - cable

of the forces acting on the float (density of the upper liquid layer and of the air, friction in the wheel bearings, mass of the connecting chain, etc.) on the error in the measured magnitude of the liquid level were investigated by the method illustrated on a specific example. It was found that: 1) the optimum height of the working part of the float must be somewhat larger than the sum of measurement errors; 2) the accuracy of measurement depends mainly on the outer diameter of the float and on the water-level measurement range and may be reduced to ±1 cm for a range of H = 1000 cm; 3) the optimum counterweight force is numerically equal to the maximum absolute increase in the lifting force acting on the float;

4) the floating level gage is subject to an asymmetric error, the magnitude of which depends on the nature and selection of the main working elements of the device.

SOME PROBLEMS CONCERNING THE METHOD AND TREATMENT OF WAVE MEASUREMENTS ON LARGE RESERVOIRS

Fedulova, Ye. M. (32)

The GM-16 wave graph, designed for marine operation, may be used on reservoirs if the water is deep enough, a buoyant cable is supplied, and the recording of wave height is increased by a factor of 3—5, making each scale division of the tape represent 5—10 cm. Comparison of a maximum-minimum gauge with records from a GM-16 wave graph set up next to the gauge permits determination of the conversion factor for deriving wave heights from gauge readings. The maximum-minimum gauge does not record absolute wave height but rather the maximum difference in wave levels over a period of time. By using a theoretical or empirical generalized dimensionless distribution curve, it is possible to construct the entire reliability curve for wave height in a system of wave movements. Several dimensionless curves for this purpose are shown in Fig. 1. This treatment of observations on a maximum-minimum gauge makes it possible to use the data for determining characteristics of wind-generated wave movements equal in value to other semi-instrumental and instrumental measurements. The greatest difference in wave levels measured by the maximum-minimum gauge corresponds approximately to wave height with an error probability of 0.01%.

Best Available Copy

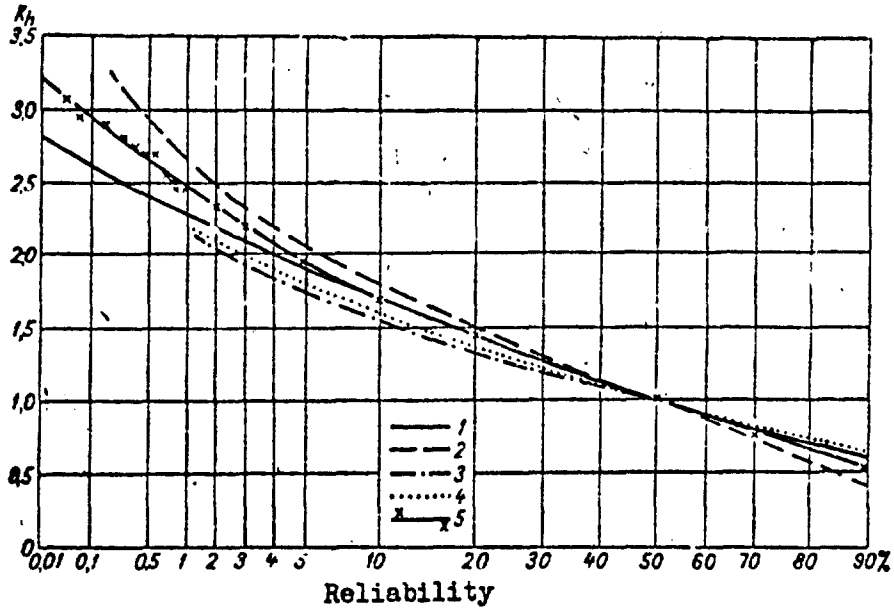

Fig. 1. Dimensionless generalized curves for reliability of wave height in a system of wave motion. The ordinate K_h is a dimensionless factor representing the ratio of wave height for any desired reliability to the wave height as given by 50% reliability. 1 - Theoretical Pearson type 1 curve at $C_v = 0.40$ and $C_s = 0.80$; 2—5 - generalized empirical curves: 2 - marine conditions; 3 - Tsimlyanskaya Reservoir; 4 - Rybinsk Reservoir; 5 - Kuybyshev Reservoir.

J. Miscellaneous

APPARATUS AND TECHNIQUE FOR DETERMINING THE TEMPERATURE, PRESSURE, AND DENSITY IN THE HIGH LAYERS OF THE ATMOSPHERE

Bederov, V. M., Ye. A. Besyadovskiy, I. N. Ivanova, G. A. Kokin, and A. S. Ozerova. (9)

A description of apparatus (see Fig. 1) for use in meteorological sounding rockets for determining temperatures, pressures, and densities in the upper atmosphere is presented. The apparatus consists of three ionization manometers for measuring pressures in the range from 1 to 10^{-5} mm Hg, three Pirani manometers for the pressure range from 5 to

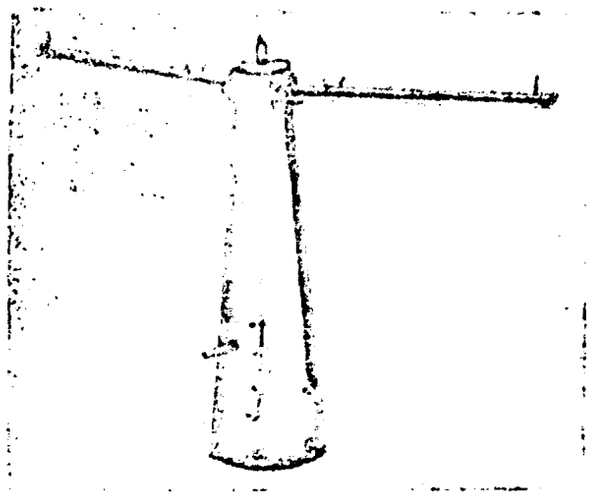

Fig. 1. Sensor head.

5×10^{-2} mm Hg, two resistance thermometers for measuring the atmospheric temperature, supplementary resistance thermometers for measuring the temperatures of the manometer bulbs and main thermometer holders, and a membrane manometer for the pressure range 250 to 5 mm Hg. One part of the electronics amplifies the ion currents of the ionization manometers, stabilizes the emission currents, supplies calibration signals to the ionization manometer amplifiers, and supplies the high-voltage circuits of the ionization manometers. The second part consists of unbalanced Wheatstone bridges including the measuring elements of the instruments, compensation elements, fixed resistors, and resistors of the control signal bridge. Typical calibration curves for the manometers are shown, and expressions are derived for the atmospheric temperature, pressure, and density in terms of the quantities measured directly by the instruments. Without taking dissociation into account, the pressure-measurement error of the ionization manometers can reach 25% at altitudes between 80—120 km. Correction of the calibration curves, based on model values, should reduce this error to a maximum of 15% at 120 km.

APPARATUS FOR MEASURING THE TEMPERATURE AND PARTIAL DENSITY OF MOLECULAR NITROGEN IN THE UPPER ATMOSPHERE

Zhukov, A. P., N. A. Sokova, and A. F. Chizhov. (75)

Apparatus for measuring the temperature and partial density of molecular nitrogen in the upper atmosphere is described. The apparatus, which is carried by a sounding rocket, consists of two omegatron mass spectrometers, the axes of whose input channels have the same angle with the incoming flow. The input port for one of the devices is in the form of a diaphragm with sharp edges; the other is connected to the atmosphere by a cylindrical tube. The omegatron sensitivity for molecular nitrogen is 10^{-8} mm Hg. The electronics consist of an electrometer amplifier measuring

ion currents in the interval 5×10^{-13} to 1×10^{-10} a, a variable frequency oscillator with a sweep period of 1.5 sec, an emission current stabilizer, and voltage converters. The apparatus is intended for use above 120 km.

INVESTIGATION OF PRECIPITATION PARTICLE PARAMETERS IN THE FREE ATMOSPHERE

Krasnogorskaya, N. V., Yu. Ya. Kurilenko, and I. M. Rybin. (45)

The charge and size distribution of water droplets in atmospheric clouds were determined by experiments carried out with the aid of an airborne droplet meter (see Fig. 1) attached to an IL-14 aircraft. Circuit diagrams for the amplifiers used in the droplet meter are also presented, and equations relating the amplitude of the final output signal to the size and charge of droplet are derived. The probable error in the experimental determinations due to droplet spattering is estimated as a function of meter opening. The results are shown graphically in Fig. 2. These experimental measurements were carried out during summer and autumn of 1962—1965 over the Eastern Ukrainian Plain, and the results are summarized in tables and graphs. The results agree with the exponential law for the change in the charge of water droplets as a function

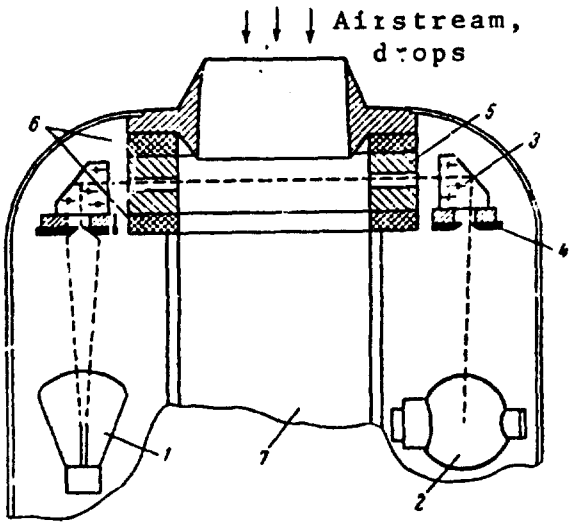

Fig. 1. Schematic of droplet meter. 1 - Illuminator; 2 - photomultiplier; 3 - lens-prism; 4 - stops; 5 - induction ring; 6 - insulator; 7 - shaft.

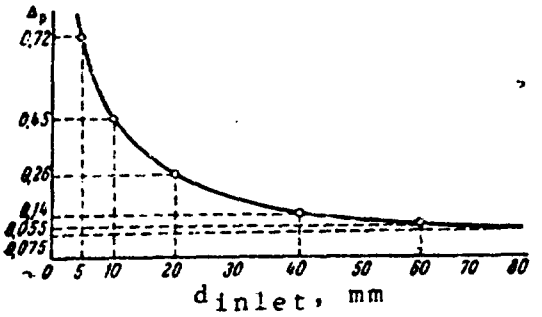

Fig. 2. Dependence of the probability of splattering on the diameter of meter inlet opening.

of their descent from the clouds toward the earth, as explained by N. V. Krasnogorskaya (Issledovaniye protsessov elektrizatsii chastits oblakov i osadkov. Izv. AN SSSR, ser. geofiz., No. 1, 1960).

ORG: Institute of Applied Geophysics (Institut prikladnoy geofiziki)

INVESTIGATION OF THE METHOD FOR MEASURING SNOW RESERVES BY USING GAMMA RADIATION FROM THE EARTH

Zotimov, N. V. (76)

A method of measuring snow reserves by means of gamma radiation from the earth is discussed. The ratio of radiation with snow cover to radiation without may be expressed by a simple function involving the thickness of the snow. The instrument, called the M-100 snow gage (see Fig. 1), consists of a gamma-ray detector (gas discharge counter), a pulse

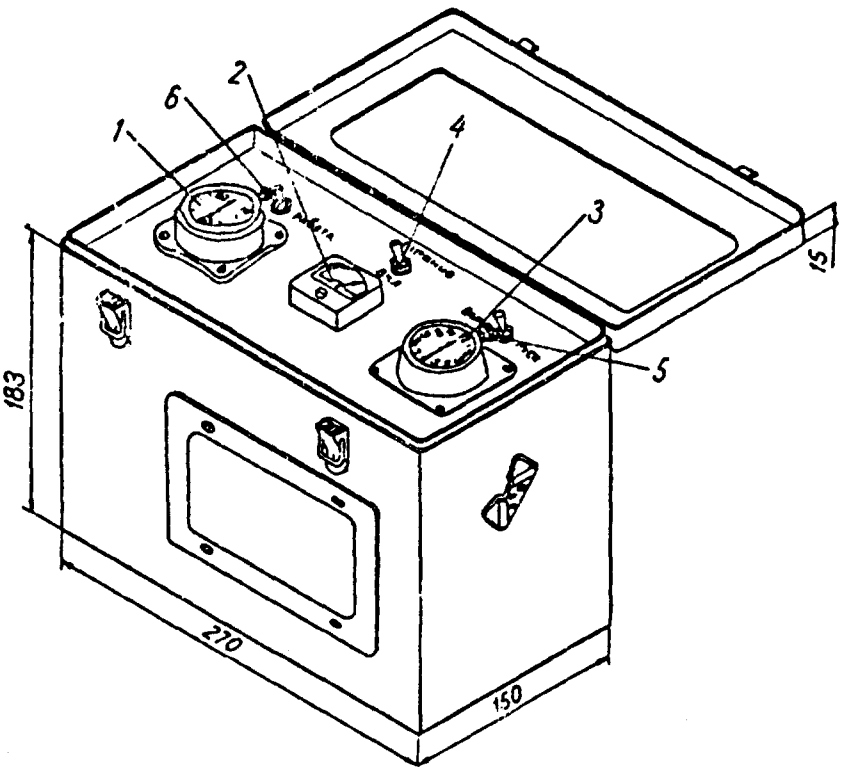

Fig. 1. M-100 snow gage.
1 - Pulse counter;
2 - voltmeter;
3 - timer;
4 - power switch;
5 - pulse-counter switch; 6 - "test-operate" switch.

counter; and a power supply; the electric circuit is transistorized. The working of the instrument is described in detail. Analysis of measurements with the gage and field tests show that the instrument is satisfactory when the snow cover is stable. Errors in measuring reserves did not exceed 2.5—8 mm in the range of reserves investigated (10—300 mm). If the snow cover is unstable because of considerable variation in soil moisture in the 0—20 cm soil layer, the error in measurement increases. The technique should therefore be refined by making tests in different climatic zones. The electric circuit and design of the gage guarantee reliable operation under adverse weather conditions. Efficiency of making snow surveys has increased by a factor of 5—6 by using the M-100 gage, and the task of determining water in snow is considerably less laborious than by the weight method, especially when frozen crusts and ice layers are present. The gage permits determination of only the water reserves in the snow cover, but it may be used in combination with a measuring rod, increasing its usefullness. Operation of the instrument and treatment of the data are rather simple, readily mastered by observers and other personnel.

MAGNETIC PROBE FOR THE CONTACTLESS MEASUREMENT OF CURRENT PULSES

Afinogenov, L. P., S. I. Grushin, and Ye. V. Romanov. (3)

A snap-around ammeter probe with a built-in stepup transformer suitable for measuring current pulses is described. The external view of the probe is shown in Fig. 1. The

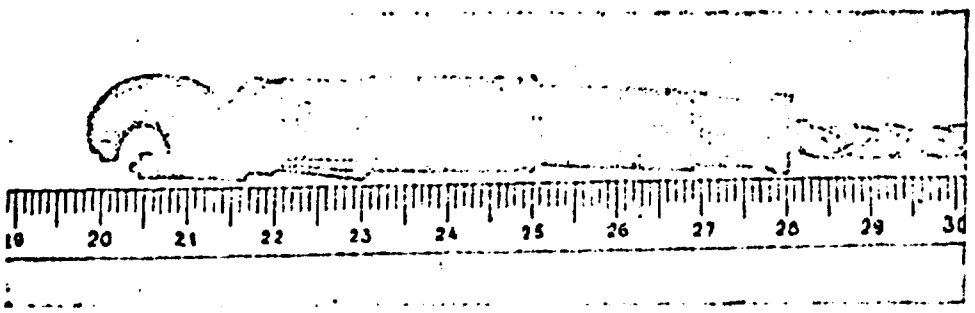

Fig. 1.

operation of this probe is analyzed mathematically for cases of low and high impedance windings. The probe consists of a miniature transformer which can be snapped around a conductor

carrying a current. The voltage from the secondary winding is fed to a measurement circuit with an oscilloscope at the output. The analysis of probe performance is carried out for the case of a square wave but the probe can be used to measure pulses of any shape. It is shown that when the pulses are very short, the leading edge of the pulse may be corrected by connecting an additional inductance into the load circuit. The probe is particularly well suited for measuring pulse currents in computer circuitry where the branching of conductors is pronounced. The probe is relatively resistant to changes in the gap and introduces a relatively small additional impedance into the circuit whose current is being measured. The version of the probe circuits shown in Fig. 2 is recommended for measuring pulses with a

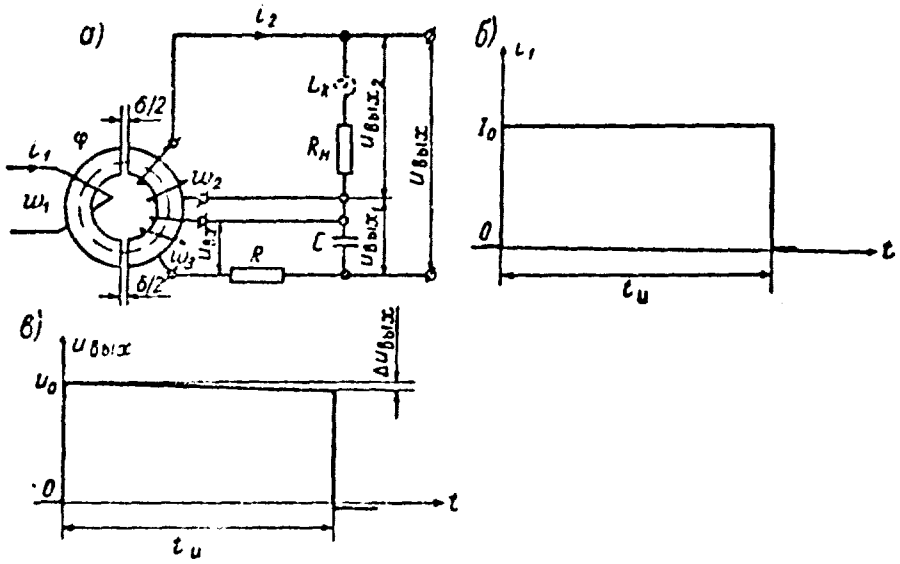

Fig. 2. Compensation for the flat portion of the pulse picked up by the transformer probe.

duration up to 20 microseconds. The magnetic circuit of this version is in two parts. One part is fabricated from a ferrite core (ϕ_1 = 1000) with an outside diameter of 10 mm. The core is cut along the diameter into three parts and is about 3 mm high. The second part represents a ferrite strip with dimensions 3 x 8 x 2.5 mm. The windings are situated on the ring part of the core and are wound in the same direction. Winding w_2 has 40 turns while winding w_3 has 160 turns of PEV-2-0.11 wire. R_L = 13.5 ohm, R = 33 kohm, C = 3300 μf. The values of R and C are adjusted. The probe described in the article was fabricated and successfully tested in the adjustment of a digital computer operating with current pulses.

ESTIMATION OF RANDOM ERRORS IN MEASUREMENTS OF TOTAL OZONE CONTENT WITH UNIVERSAL (M-83) AND AIRCRAFT OZONOMETERS

Arkhipova, T. N. (8)

Thirty series of measurements of total (atmospheric) ozone content were made in March to October 1965 at the field experimental station in Voyeykovo with universal ozonometers and aircraft ozonometers. Each series consisted of 15 to 20 readings made every 1 to 2 minutes with direct sun light and with the zenith light in clear and cloudy skies. The latter measurements were made at high, medium and low cloud levels. The necessary assumption, supported by long experience, was that the ozone content did not change during one hour; the duration of each series did not exceed 40 minutes. Examples of series with each kind of light are given. The standard deviation σ of a single measurement for each kind was calculated, as well as the relative error δ. σ for direct light was 0.007 cm O_3, δ = 0.9%; for clear sky zenith light σ = 0.010 cm O_3, δ = 2.9%, and for cloudy sky zenith light σ = 0.016, 0.019 and 0.03, δ = 4.4, 4.8 and 4.9%, respectively, depending on cloud level. The errors were smaller at noon (slowly changing sun height) than in the morning and evening.

HIGH FREQUENCY CAPACITANCE COAXIAL PROBE FOR REMOTE MEASUREMENT OF THE DENSITY OF SLUSH ICE

Romanenko, Ye. M. (54)

The model of a coaxial capacitance probe (see Fig. 1) is discussed as a means of remote measurement of the density of slush ice. Figure 1a shows partial cross section of the probe, 1b shows the submersible rods 11 and cables 13 by which the probe is connected to the measurement system, 1c - a section of the probe through the crossarm 2, 1d is a cross section through 1-I, and 1e is a cross section taken through 11-II. A hollow coaxial system is formed by the thin-walled outer casing 1 and the inner core 4. The capacitance of this system is determined by

$$C_k = \frac{0.24 \cdot l + 0.08\, D}{\lg \frac{D}{d}}$$

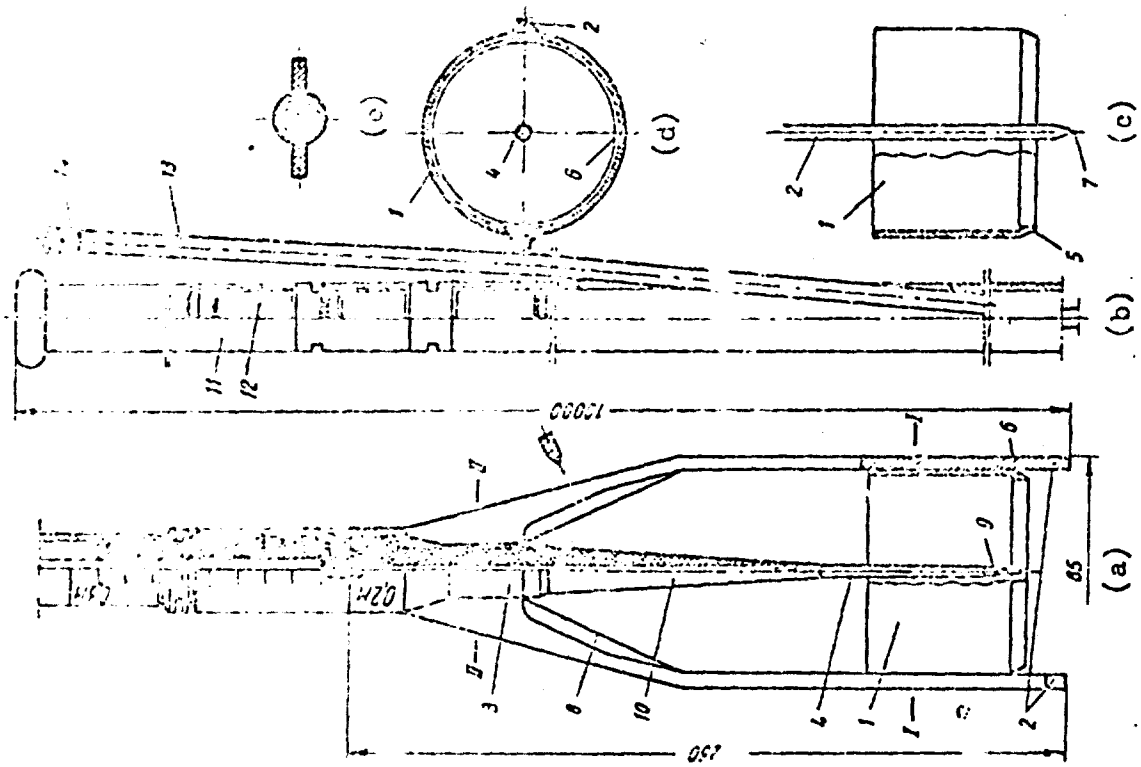

Fig. 1. Construction of probe

where ℓ is the length of the capacitor, D is the inner diameter of the outer plate, d is the outer diameter of the inner plate, and ε is the dielectric constant. The cutting edge 5 and the pointed tips 7, 8, and 9 facilitate introducing the probe into the ice without changing the density of the working cavity formed by the plates 1 and 4. The shield of the high frequency coaxial cable 13 is connected to the outer casing 1, and the center conductor is connected to the inner core 4. The total weight of the probe with a complete set of rods does not exceed 8 kg, and where only one rod is used, the weight is lowered to 2.5 kg. Frequencies of 10 MHz and higher may be used with this system.

ORG: Design Research and Scientific Research Institute (Gidroproyekt) (Proyektnoizyskatel'skiy i nauchno-issledovatel'skiy institut (Gidroproyekt))

DEPENDENCE OF THE SENSITIVITY OF A VACUUM RADIATION THERMO-ELEMENT ON ITS TEMPERATURE

Brounshteyn, A. M. (15)

Considerable changes of ambient temperature may affect the sensitivity of a radiation thermoelement (RTE), and this possibility must be taken into consideration in field work and in measurements during aircraft flights. The stationary change of temperature of two receiver areas (connected with two junctions) of a compensated RTE, which eliminates the effect of random temperature fluctuations, changes the heat transfer by radiation and by conductivity of the supporting wires (the RTE is assumed to be in an evacuated container), thus changing the temperature difference of the receiver areas. The author, following the treatment of this problem by B. P. Kosyrev, analyzes the quantitative relations between thermal emf and radiation flux difference at two receiver areas, emissivity coefficients of both sides of the areas, their size, and the heat conductivity of the supporting wires. An expression for the heat transfer to the surrounding medium is obtained. The inverse quantity, $R(T_0)$—the heat resistance—is a function of T_0, the temperature of the housing. The sensitivity α of the RTE is derived as a function of T_0. The sensitivity change $1/\alpha \cdot d\alpha/dT_0$ is obtained from the derived relation between α and $R(T_0)$. If heat losses by conductivity are negligible, the sensitivity change is shown to be $-3/T_0$. For $T_0 = 300°K$, this amounts to 1% at an increase of 1°. If heat losses by conductivity and by radiation are equal, then it is 0.5% per degree. These quantitative considerations indicate what quantities affect the sensitivity. However, the instrument parameters in the expression are known only to a rough approximation. Therefore, the temperature dependence of the RTE must be determined experimentally. Such an investigation was made by the author with a RTE described by him [Opt. Spektrosk. 4, #3 (1958)]. The receiver areas had a diameter of 0.5 mm, the chromel-constantan wires had a diameter of 35 micron and were 5 mm long. The calibration was made between 5 and 27 C. $1/\alpha \cdot d\alpha/dT_0$ was about -0.7%, which agrees quite well with the theoretical value (0.64).

DETERMINING OPTIMAL RELIABILITY AND EFFICIENCY OF HYDROMETEOROLOGICAL SYSTEMS AND INSTRUMENTS

Dimaksyan, A. M., and V. P. Petrov. (23)

The efficiency and optimal reliability of hydrometeorological instruments and systems have been determined by considering different requirements of reliability: 1) general requirements for reliability on the basis of a given actual efficiency of the system; 2) optimal reliability of self-restoring systems of repeated use; and 3) optimal reliability of non-self-restoring systems of single use. Expressions are obtained for each of these variants, and examples are furnished for illustration. For the first variant, the relations may be expressed by

$$\overline{T}_{0i} = \frac{N}{N_i}\overline{T}_0,$$

where $\overline{T}_0$ is the mean failure-free interval of the electronic system, N the total number of primary elements in the system, $\overline{T}_{0i}$ the mean required failure-free interval of the i-th setup, and N_i the number of elements in this setup. The efficiency of the system may be expressed by

$$E_э = \frac{\overline{T}_0}{\overline{T}_0 + \overline{T}_в} e^{-\frac{t}{\overline{T}_в}} \cdot E_0,$$

where $E_э$ is the given probability of a completed task, E_0 the ideal efficiency, and t the rated time of continuous operation. For the second variant, the optimal reliability (minimal expenditure) is expressed by

$$P_{p\ opt} = \frac{C_0}{C_1}\overline{T}_0^2 N\lambda_{ave},$$

where C_1 is the average cost of a single failure, C_0 supplementary expense for securing reliability of the analog equipment, and λ_{ave} the average incidence of failures of elements in the analog equipment. For irreducible systems, the optimal reliability parameter may be determined by

$$\frac{C_1}{C_0}\ln(1 - P_э)(-\ln P)^{n+1}P = Nt\lambda_{ave}[\ln(1 - P)]^2(1 - P),$$

where C_K is the total cost of a single set of equipment.

Best Available Copy

ALPHABETICAL LIST OF AUTHORS

1. Afinogenov, L. P., and N. I. Radomysl'skaya. Logic elements based on current distribution and their use in discrete systems. Part I. Operational principles and typical circuits. Leningrad. Glavnaya geofizicheskaya observatoriya. Trudy, no. 216, 1967. Avtomaticheskiye meteorologicheskiye stantsii i ustroystva (Automatic meteorological stations and installations), 17—40.

2. Afinogenov, L. P., and N. I. Radomysl'skaya. Logic elements based on current distribution and their use in discrete systems. Part II. Design of current distribution systems. Leningrad. Glavnaya geofizicheskaya observatoriya. Trudy, no. 216, 1967. Avtomaticheskiye meteorologicheskiye stantsii i ustroystva (Automatic meteorological stations and installations), 41—55.

3. Afinogenov, L. P., S. I. Grushin, and Ye. V. Romanov. Magnetic probe for the contactless measurement of current pulses. Leningrad. Glavnaya geofizicheskaya observatoriya. Trudy, no. 216, 1967. Avtomaticheskiye meteorologicheskiye stantsii i ustroystva (Automatic meteorological stations and installations), 80—88.

4. Afinogenov, L. P., and M. V. Popov. On the possibility of measuring the velocity of moving gases and liquids with the aid of a generating system with delayed acoustic feedback. Leningrad. Glavnaya geofizicheskaya observatoriya. Trudy, no. 216, 1967. Avtomaticheskiye meteorologicheskiye stantsii i ustroystva (Automatic meteorological stations and installations), 139—142.

5. Alekseyeva, L. V., V. M. Mogidson, G. L. Nizdoyminoga, P. N. Nikolayev, and I. N. Udalov. Automatic space-scan mechanism for meteorological radar. Leningrad. Glavnaya geofizicheskaya observatoriya. Trudy, no. 231, 1968. Voprosy radiolokatsionnoy meteorologii (Problems of radar meteorology), 75—81.

6. Aniskin, L. V., and S. I. Grushin. Some problems associated with the design of a memory system for an automatic weather station. Leningrad. Glavnaya geofizicheskaya observatoriya. Trudy, no. 216, 1967. Avtomaticheskiye meteorologicheskiye stantsii i ustroystva (Automatic meteorological stations and installations), 56—70.

Best Available Copy

7. Arbuzova, V. N., Yu. A. Glagolev, M. V. Krechmer, and L. F. Tormoz. Results from an experimental investigation involving the dependence of the accuracy of air temperature measurements on the parameters of the thermoresistor and temperature unit in the radiosonde. Meteorologiya i gidrologiya, no. 2, 1968, 91—96.

8. Arkhipova, T. N. Estimation of random errors in measurements of total ozone content with universal (M-83) and aircraft ozonometers. Leningrad. Glavnaya geofizicheskaya observatoriya. Trudy, no. 213, 1968. Aktinometriya, atmosfernaya optika i ozonometriya (Actinometry, atmospheric optics and ozonometry), 98—104.

9. Bedrov, V. M., Ye. A. Besyadovskiy, I. N. Ivanova, G. A. Kokin, and A. S. Ozerova. Apparatus and technique for determining the temperature, pressure, and density in the high layers of the atmosphere. Tsentral'naya aerologicheskaya observatoriya. Trudy, no. 77, 1967. Apparatura i metodika issledovaniy verkhnikh sloyev atmosfery (Apparatus and methods of studying the upper layers of the atmosphere), 17—22.

10. Bespalov, D. P., and G. M. Romanova. On the compensation for the resistance of lead wires used with an unbalanced bridge. Leningrad. Glavnaya geofizicheskaya observatoriya. Trudy, no. 216, 1967. Avtomaticheskiye meteorologicheskiye stantsii i ustroystva (Automatic meteorological stations and installations), 143—147.

11. Bespalov, D. P., S. I. Zachek, and B. L. Kozhevnikov. Temperature measurement with the UATGMS-1 automatic weather station. Leningrad. Glavnaya geofizicheskaya observatoriya. Trudy, no. 216, 1967. Avtomaticheskiye meteorologicheskiye stantsii i ustroystva (Automatic meteorological stations and installations), 93—105.

12. Bogachev, E. Yu., A. V. Goreleychenko, S. P. Semenov, and Ye. I. Sheyman. Automatic thermometer. Leningrad. Gosudarstvennyy gidrologicheskiy institut. Trudy, no. 149, 1967. Primeneniye avtomatiki i radioelektroniki pri gidrologicheskikh issledovaniyakh i gidrologicheskiye pribory (Application of automation and radioelectronics during hydrological studies and hydrological instruments), 20—29.

13. Bozhevikov, N. S., and L. S. Shestopalov. Pulsed-light cloud-height indicators. Leningrad. Nauchno-issledovatel'skiy institut gidrometeorologicheskogo priborostroyeniya. Informatsionnyye materialy po gidrometeorologicheskim priboram i metodam nablyudeniy, no. 32, 1967, 3—12.

Best Available Copy

14. Bozhevikov, N. S., and L. S. Shestopalov. Review of ceilometers. Leningrad. Nauchno-issledovatel'skiy institut gidrometeorologicheskogo priborostroyeniya. Informatsionnyye materialy po gidrometeorologicheskim priboram i metodam nablyudeniy, no. 32, 1967, 12—21.

15. Brounshteyn, A. M. Dependence of the sensitivity of a vacuum radiation thermoelement on its temperature. Leningrad. Glavnaya geofizicheskaya observatoriya. Trudy, no. 213, 1968. Aktinometriya, atmosfernaya optika i ozonometriya (Actinometry, atmospheric optics and ozonometry), 70—73.

16. Bulanova, L. K., G. A. Kokin, S. P. Petrov, and V. Ya. Rusina. Some results of the development of a technique for measuring the temperature of high layers of the atmosphere using microthermistors. Tsentral'naya aerologicheskaya observatoriya. Trudy, no. 77, 1967. Apparatura i metodika issledovaniy verkhnikh sloyev atmosfery (Apparatus and methods of studying the upper layers of the atmosphere), 3—16.

17. Bychkov, N. F., and V. D. Ivanov. Feeding information from punchcards containing graphic marks into digital computers. Leningrad. Arkticheskiy i antarkticheskiy nauchno-issledovatel'skiy institut. Trudy, v. 281, 1967. Gidrodinamicheskiye i fiziko-statisticheskiye metody analiza i predvychisleniya gidrometeorologicheskikh poley v Arktike (Hydrodynamic and physicostatistical methods of analysis and precomputation of hydrometeorological fields in the Arctic), 176—178.

18. Bychkov, N. F., and V. D. Ivanov. Operation of a two-coordinate tracing device in a Ural-2 computer system. Leningrad. Arkticheskiy i antarkticheskiy nauchno-issledovatel'skiy institut. Trudy, v. 281, 1967. Gidrodinamicheskiye i fiziko-statisticheskiy metody analiza i predvychisleniya gidrometeorologicheskikh poley v Arktike (Hydrodynamic and physicostatistical methods of analysis and precomputation of hydrometeorological fields in the Arctic), 170—175.

19. Dement'yev, N. F., and V. I. Grigor'yev. Some results of the processing of hydrologic observations. Moscow. Nauchno-issledovatel'skiy institut aeroklimatologii. Trudy, no. 46, 1967. Mekhanizatsiya obrabotki rezhimnykh materialov i voprosy klimatologii (Mechanizing the processing of hydrometeorological regime data and problems of climatology), 18—22.

Best Available Copy

20. Devyatov, Yu. A., and A. P. Murav'yev. Extending the range of the "Meteor" station in recording the distance to a radiosonde. Leningrad. Nauchno-issledovatel'skiy institut gidrometeorologicheskogo priborostroyeniya. Informatsionnyye materialy po gidrometeorologicheskim priboram i metodam nablyudeniy, no. 33, 1967, 40—42.

21. Dimov, I. A. A method of determining the stability of complex dynamic systems. Leningrad. Gosudarstvennyy gidrologicheskiy institut. Trudy, no. 149, 1967. Primeneniye avtomatiki i radioelektroniki pri gidrologicheskikh issledovaniyakh i gidrologicheskiye pribory (Application of automation and radioelectronics during hydrological studies and hydrological instruments), 86—93.

22. Dimaksyan, A. M. Accuracy of measurement and methods of calculation of a floating level gage. Leningrad. Gosudarstvennyy gidrologicheskiy institut. Trudy, no. 149, 1967. Primeneniye avtomatiki i radioelektroniki pri gidrologicheskikh issledovaniyakh i gidrologicheskiye pribory (Application of automation and radioelectronics during hydrological studies and hydrological instruments), 3—19.

23. Dimaksyan, A. M., and V. P. Petrov. Determining optimal reliability and efficiency of hydrometeorological systems and instruments. Leningrad. Gosudarstvennyy gidrologicheskiy institut. Trudy, no. 149, 1967. Primeneniye avtomatiki i radioelektroniki pri gidrologicheskikh issledovaniyakh i gidrologicheskiye pribory (Application of automation and radioelectronics during hydrological studies and hydrological instruments), 114—132.

24. Dimaksyan, A. M., N. B. Zeliger, V. P. Petrov, and L. V. Fedotova. An automatic recording hydrologic station (ARRGP). Leningrad. Gosudarstvennyy gidrologicheskiy institut. Trudy, no. 149, 1967. Primeneniye avtomatiki i radioelektroniki pri gidrologicheskikh issledovaniyakh i gidrologicheskiye pribory (Application of automation and radioelectronics during hydrological studies and hydrological instruments), 32—66.

25. Dobrovolskiy, Ye. M. Some problems in automatic processing of hydrometeorological information. Gidrometeorologicheskiy nauchno-issledovatel'skiy tsentr SSSR. Trudy, no. 1, 1967. Avtomatizatsiya obrabotki meteorologicheskoy informatsii i ob"yektivnyy analiz (Automation of the processing of meteorological data and an objective analysis), 3—9.

Best Available Copy

26. Dreyer, A. A. Semi-automatic plotting of graphic information. Meteorologiya i gidrologiya, no. 5, 1968, 101—104.

27. Fedorov, A. A., and G. B. Brylev. Apparatus for studying the space-time characteristics of meteorological radar returns. Leningrad. Glavnaya geofizicheskaya observatoriya. Trudy, no. 231, 1968. Voprosy radiolokatsionnoy meteorologii (Problems of radar meteorology), 87—90.

28. Fedorovich, F. N. Visible indication of the nonstable performance of the photomultiplier in the Obukho unit. Leningrad. Nauchno-issledovatel'skiy institut gidrometeorologicheskogo priborostroyeniya. Informatsionnyye materialy po gidrometeorologicheskim priboram i metodam nablyudeniy, no. 32, 1967, 45.

29. Fedotova, L. V. The design of electronic circuits for hydrometeorological systems of discrete automatic equipment. Leningrad. Gosudarstvennyy gidrologicheskiy institut. Trudy, no. 149, 1967. Primeneniye avtomatiki i radioelektroniki pri gidrologicheskikh issledovaniyakh i gidrologicheskiye pribory (Application of automation and radioelectronics during hydrological studies and hydrological instruments), 94—113.

30. Fedotova, L. V. Remote mercury thermometer with optical-fiber installation. Leningrad. Gosudarstvennyy gidrologicheskiy institut. Trudy, no. 149, 1967. Primeneniye avtomatiki i radioelektroniki pri gidrologicheskikh issledovaniyakh i gidrologicheskiye pribory (Application of automation and radioelectronics during hydrological studies and hydrological instruments), 30—31.

31. Fedotova, L. V., and O. S. Chugreyev. On the problem of determining the magnitude of the telemetry error when using a number pulse code. Leningrad. Gosudarstvennyy gidrologicheskiy institut. Trudy, no. 149, 1967. Primeneniye avtomatiki i radioelektroniki pri gidrologicheskikh issledovaniyakh i gidrologicheskiye pribory (Application of automation and radioelectronics during hydrological studies and hydrological instruments), 73—77.

32. Fedulova, Ye. M. Some problems concerning the method and treatment of wave measurements on large reservoirs. Komsomolskiy. Gidrometeorologicheskaya observatoriya. Sbornik rabot. no. 8, 1968, 88—103.

33. For further progress of Soviet hydrometeorological instrument construction. Leningrad. Nauchno-issledovatel'skiy institut gidrometeorologicheskogo priborostroyeniya. Informatsionnyye materialy po gidrometeorologicheskim priboram i metodam nablyudeniy. Trudy, no. 18, 1968, 3—5.

34. Gnilitskiy, V. V. Calculation of a control circuit for an electromagnetically operated punch in the automatic ARRPG [cyclic recording hydrologic station] equipment. Leningrad. Gosudarstvennyy gidrologicheskiy institut. Trudy, no. 149, 1967. Primeneniye avtomatiki i radioelektroniki pri gidrologicheskikh issledovaniyakh i gidrologicheskiye pribory (Application of automation and radioelectronics during hydrological studies and hydrological instruments), 82—85.

35. Grushin, S. I., and Ye. V. Romanov. The work of an automatic weather station with arbitrary time information sources. Leningrad. Glavnaya geofizicheskaya observatoriya. Trudy, no. 216, 1967. Avtomaticheskiye meteorologicheskoye stantsii i ustroystva (Automatic meteorological stations and installations), 76—79.

36. Gulyayev, A. A. Apparatus for measuring the mean values of wind speed and direction. Class 42, No. 218552 [announced by Scientific Research Institute of Hydrometeorological Instrument Manufacture (Nauchno-issledovatel'skiy institut gidrometeorologicheskogo priborostroyeniya)]. Izobreteniya, promyshlennyye obraztsy, tovarnyye znaki, no. 17, 1968, 111.

37. Gulyayev, A. A., K. N. Manuylov, L. A. Shestopalov, V. A. Yurchuk. Apparatus for measuring speed and direction of the wind. Class 42, No. 218551 [announced by Scientific Research Institute of Hydrometeorological Instrument Manufacture (Nauchno-issledovatel'skiy institut gidrometeorologicheskogo priborostroyeniya)]. Izobreteniya, promyshlennyye obraztsy, tovarnyye znaki, no. 17, 1968, 110.

38. Kamyshnikov, V. V. On the problem concerning the transmission of hydrometeorological data along communication channels. Leningrad. Gosudarstvennyy gidrologicheskiy institut. Trudy, no. 149, 1967. Primeneniye avtomatiki i radioelektroniki pri gidrologicheskikh issledovaniyakh i gidrologicheskiye pribory (Application of automation and radicelectronics during hydrological studies and hydrological instruments), 67—72.

39. Karpusha, V. Ye. A pressure transducer used in the compensation method of measuring atmospheric pressure. Leningrad. Glavnaya geofizicheskaya observatoriya. Trudy, no. 216, 1967. Avtomaticheskiye meteorologicheskiye stantsii i ustroystva (Automatic meteorological stations and installations), 106—138.

40. Kartashova, M. V., and T. V. Popova. The principles of the design of a program for retrieval of synoptic telegrams from the general flow of meteorological information. Gidrometeorologicheskiy nauchno-issledovatel'skiy tsentr SSSR. Trudy, no. 1, 1967. Avtomatizatsiya obrabotki meteorologicheskoy informatsii i ob"yektivnyy analiz (Automation of the processing of meteorological data and an objective analysis), 10—21.

41. Kastin, O. M. A method of sorting aerological information and creating an information system. Gidrometeorologicheskiy nauchno-issledovatel'skiy tsentr SSSR. Trudy, no. 1, 1967. Avtomatizatsiya obrabotki meteorologicheskoy informatsii i ob"yektovnyy analiz (Automation of the processing of meteorological data and an objective analysis), 84—88.

42. Klyukin, N. K. The characteristics of scheduled hydrometeorological information and some principles of its processing and storage. Gidrometeorologicheskiy nauchno-issledovatel'skiy tsentr SSSR. Trudy, no. 1, 1967. Avtomatizatsiya obrabotki meteorologicheskoy informatsii i ob"yektivnyy analiz (Automation of the processing of meteorological data and an objective analysis), 53—71.

43. Klyukin, N. K. Problem of automating the acquisition, processing, storage, and dissemination of hydrometeorological information. Moscow. Nauchno-issledovatel'skiy institut aeroklimatologii. Trudy, no. 54 (4), 1968. Voprosy gidrometeorologii Sibiri (Problems of hydrometeorology of Siberia), 3—17.

44. Klyukin, N. K. A system for automated processing of operational hydrometeorological information. Moscow. Nauchno-issledovatel'skiy institut aeroklimatologii. Trudy, no. 46, 1967. Mekhanizatsiya obrabotki rezhimnykh materialov i voprosy klimatologii (Mechanizing the processing of hydrometeorological regime data and problems of climatology), 13—17.

45. Krasnogorskaya, N. V., Yu. Ya. Kurilenko, and J. M. Rybin. Investigation of precipitation particle parameters in the free atmosphere. AN SSSR. Izvestiya. Fizika atmosfery i okeana, v. 3, no. 12, 1967, 1292—1304.

46. Liyepa, E. Ya. M-95 anemometer. Pribory i sistemy upravleniya, no. 12, 1967, 57—58.

47. Machine that understands the language of the ionosphere. Narodnoye khozyaystvo Kazakhstana, no. 3, 1968, 95.

48. Manuylov, [illegible] N., A. L. Zlatin, A. A. Gulyayev, M. Ya. Shapiro, Yu. V. Yermakov, S. M. Ryzhikova, G. S. Gershenzon, V. A. Yurchuk, D. Ya. Surazhskiy, I. N. Mogil'ner, L. A. Shestopalov, O. A. Volkova, and V. I. Dmitriyev. A device for remote measuring of wind parameters. Class 42, No. 206924 [announced by Scientific Research Institute of Hydrometeorological Instruments (Nauchno-issledovatel'skiy institut gidrometeorologicheskogo priborostroyeniya)]. Izobreteniya, promyshlennyye obraztsy, tovarnyye znaki, no. 1, 1968, 136.

49. MRL-1 meteorological radar. VDNKh SSSR. Informatsionnyy byulleten', no. 4, 1968, 35.

50. Nipomnyashchiy, S. I. High accuracy liquid manometer. Leningrad. Nauchno-issledovatel'skiy institut gidrometeorologicheskogo priborostroyeniya. Informatsionnyye materialy po gidrometeorologicheskim priboram i metodam nablyudeniy. Trudy, no. 17, 1967, 58-60.

51. Pokrovskaya, I. A., and N. P. Fateyev. Calibration of meteorologic instruments. Leningrad. Glavnaya geofizicheskaya observatoriya. Trudy, no. 218, 1967. Glavnaya geofizicheskaya observatoriya imeni A. I. Voyeykova za 50 let sovetskoy vlasti (The Main Geophysical Observatory during 50 years of Soviet power), 167—178.

52. RDV-1 photoelectric transmittance meter. VDNKh SSSR. Informatsionnyy byulleten', no. 4, 1968, 36.

53. RKZ-type radiosonde. VDNKh SSSR. Informatsionnyy byulleten', no. 4, 1968, 35—36.

54. Romanenko, Yr. M. High frequency capacitance coaxial probe for remote measurement of the density of slush ice. Meteorologiya i gidrologiya, no. 1, 1968, 85—88.

55. Rubinshteyn, Z. R. A description of a standard information processing program for a two-coordinate plotter. Gidrometeorologicheskiy nauchno-issledovatel'skiy tsentr SSSR. Trudy, no. [illegible], 1967. Avtomatizatsiya obrabotki meteorologicheskoy informatsii i ob"yektivnyy analiz (Automation of the processing of meteorological data and an objective analysis), [illegible].

56. Rusin, N. P., and D. P. Bespalov. The Soviet meteorological network and methods of observation. Leningrad. Glavnaya geofizicheskaya observatoriya. Trudy, no. 218, 1967. Glavnaya geofizicheskaya observatoriya imeni A. I. Voyeykova za 50 let sovetskoy vlasti (The Main Geophysical Observatory during 50 years of Soviet power), 145—152.

57. Sadovnikov, A. V. The problem of optimum frequency and accuracy of meteorological measurements. Leningrad. Arkticheskiy i antarkticheskiy nauchno-issledovatel'skiy institut. Trudy, v. 281, 1967. Gidrodinamicheskiye i fiziko-statisticheskiye metody analiza i predvychisleniya gidrometeorologicheskikh poley v Arktike (Hydrodynamic and physico-statistical methods of analysis and precomputation of hydrometeorological fields in the Arctic), 82—85.

58. Savikovskiy, I. A., and M. A. Gol'berg. The instrumental observation of visibility using the M-53 and M-71 instruments. Leningrad. Nauchno-issledovatel'skiy institut gidrometeorologicheskogo priborostroyeniya. Informatsionnyye materialy po gidrometeorologicheskim priboram i metodam nablyudeniy, no. 33, 1967, 5—8.

59. Semendyayev, K. A. Automatic plotting of isoline maps. Gidrometeorologicheskiy nauchno-issledovatel'skiy tsentr SSSR. Trudy, no. 1, 1967. Avtomatizatsiya obrabotki meteorologicheskoy informatsii i ob"yektivnyy analiz (Automation of the processing of meteorological data and an objective analysis), 89—96.

60. Semendyayev, K. A., Z. F. Gladkaya, and N. N. Ul'yanova. Automatic decoding of aerological telegrams. Gidrometeorologicheskiy nauchno-issledovatel'skiy tsentr SSSR. Trudy, no. 1, 1967. Avtomatizatsiya obrabotki meteorologicheskoy informatsii i ob"yektivnyy analiz (Automation of the processing of meteorological data and an objective analysis), 72—79.

61. Semendyayev, K. A., and O. M. Kastin. On the organization of data search in the design of automatic processing systems for meteorological information. Gidrometeorologicheskiy nauchno-issledovatel'skiy tsentr SSSR. Trudy, no. 1, 1967. Avtomatizatsiya obrabotki meteorologicheskoy informatsii i ob"yektivnyy analiz (Automation of the processing of meteorological data and an objective analysis), 80—83.

62. Shestopalov, L. A. High-sensitivity bimetallic element for temperature measurement. Leningrad. Nauchno-issledovatel'skiy institut gidrometeorologicheskogo priborostroyeniya. Informatsionnyye materialy po gidrometeorologicheskim priboram i metodam nablyudeniy. Trudy, no. 17, 1967, 29—42.

63. Sof'in, V. K., and G. M. Fedorov. Increasing the useful life of the mechanism opening and closing the lids of the "Oblako" device. Leningrad. Nauchno-issledovatel'skiy institut gidrometeorologicheskogo priborostroyeniya. Informatsionnyye materialy po gidrometeorologicheskim priboram i metodam nablyudeniy, no. 32, 1967, 45—46.

64. Sorokin, A. I. Scheme for controlling the position of lids on the "Oblako" device. Leningrad. Nauchno-issledovatel'skiy institut gidrometeorologicheskogo priborostroyeniya. Informatsionnyye materialy po gidrometeorologicheskim priboram i metodam nablyudeniy, no. 32, 1967, 43—44.

65. Stac', I. I. Utilizing flow energy for the needs of hydrometeorological stations. Leningrad. Nauchno-issledovatel'skiy institut gidrometeorologicheskogo priborostroyeniya. Informatsionnyye materialy po gidrometeorologicheskim priboram i metodam nablyudeniy, no. 33, 1967, 44—49.

66. Sternzat, M. S. The development of meteorological instruments. Leningrad. Glavnaya geofizicheskaya observatoriya. Trudy, no. 218, 1967. Glavnaya geofizicheskaya observatoriya imeni A. I. Voyeykova za 50 let sovetskoy vlasti (The Main Geophysical Observatory during 50 years of Soviet power), 153—166.

67. Torochkov, V. Yu. Conversion of signals from a bridled-cup anemometer. Leningrad. Nauchno-issledovatel'skiy institut gidrometeorologicheskogo priborostroyeniya. Informatsionnyye materialy po gidrometeorologicheskim priboram i metodam nablyudeniy. Trudy, no. 17, 1967, 11—14.

68. Torochkov, V. Yu. Gyroscopic anemorhumbometer. Class 42, No. 218553 [announced by Moscow Engineering Institute of Geodesy, Aerial Photography and Cartography (Moskovskiy institut inzhenerov geodezii, aerofotos"yemki i kartografii)]. Izobreteniya, promyshlennyye obraztsy, tovarnyye znaki, no. 17, 1968, 111.

69. Trifonov, G. P. Aerologic radiosondes. EIKA, entsiklopediya izmereniy, kontrolya i avtomatizatsii, no. 10, 1968, 65—66.

70. Tsimmerman, G. G., and S. B. Shamuilova. The principles of algorithm generation for processing of data on sources of atmospherics. Gidrometeorologicheskiy nauchno-issledovatel'skiy tsentr SSSR, Trudy, no. 1, 1967. Avtomatizatsiya obrabotki meteorologicheskoy informatsii i ob"yektivnyy analiz (Automation of the processing of meteorological data and an objective analysis), 38—52.

Best Available Copy

71. Ugreninov, I. T. Device for regulating the M-39 film hygrometer. Leningrad. Nauchno-issledovatel'skiy institut gidrometeorologicheskogo priborostroyeniya. Informatsionnyye materialy po gidrometeorologicheskim priboram i metodam nablyudeniy, no. 32, 1967, 39—40.

72. Usol'tsev, V. A. A hygrometer with thermoelectrolytic sensing element. Leningrad. Nauchno-issledovatel'skiy institut gidrometeorologicheskogo priborostroyeniya. Informatsionnyye materialy po gidrometeorologicheskim priboram i metodam nablyudeniy. Trudy, no. 18, 1968, 6—34.

73. Yefimov, V. V. Wind speed-field in the layer of air over water. AN UkrSSR. Morskoy gidrofizicheskiy institut. Ekspress-informatsiya, no. 3, 1966. Issledovaniya v yugo-zapadnoy chasti Atlanticheskogo okeana; 18-y reys nis "Mikhail Lomonosov", 58—64.

74. Yermakov, V. I. Electronic system for transmission and recording of telemetry and ranging information for small meteorological rockets. Tsentral'naya aerologicheskaya observatoriya. Trudy, no. 77, 1967. Apparatura i metodika issledovaniy verkhnikh sloyev atmosfery (Apparatus and methods of studying the upper layers of the atmosphere), 86—101.

75. Zhukov, A. P., N. A. Sokova, and A. F. Chizhov. Apparatus for measuring the temperature and partial density of molecular nitrogen in the upper atmosphere. Tsentral'naya aerologicheskaya observatoriya. Trudy, no. 77, 1967. Apparatura i metodika issledovaniy verkhnikh sloyev atmosfery (Apparatus and methods of studying the upper layers of the atmosphere), 51—53.

76. Zotimov, N. V. Investigation of the method for measuring snow reserves by using gamma radiation from the earth. Leningrad. Gosudarstvennyy gidrologicheskiy institut, Trudy, no. 152, 1968. Eksperimental'nyye gidrologicheskiye issledovaniya na Valdaye (Experimental hydraulic studies on the Valdai), 114—130.

Best Available Copy