AD688468

ENERGY LEVELS OF LIGHT NUCLEI: A = 13*

Fay Ajzenberg-Selove

Haverford College, Haverford, Pennsylvania

ABSTRACT

Preliminary draft of a compilation of information on energy levels and reactions involving ^{13}Be, ^{13}B, ^{13}C, ^{13}N, and ^{13}O.

This document has been approved for public release and sale; its distribution is unlimited.

DDC
JUN 17 1969
C

*Supported in part by the National Science Foundation [GP-8035 and 9114] and by the Office of Naval Research [Nonr-220(47)].

ONE OF THE LEMON AIP PREPRINT SERIES IN NUCLEAR PHYSICS

May 1969

Reproduced by the
CLEARINGHOUSE
for Federal Scientific & Technical
Information Springfield Va. 22151

89

Dear Colleague:

The next sub-set of "Energy Levels of Light Nuclei" will comprise A = 13, 14, 15, and will hopefully be completed by the early Fall. In the meantime here is A = 13[†] in a preliminary version to which we hope that you will contribute advice, criticism and new information. Please send these to me at the address below.

Many thanks, and a Happy Spring!

Fay Ajzenberg-Selove
Haverford College
Haverford, Pa. 19041, USA

[†] As of ≈ December 1968.

^{13}Be

The light nuclei observed, by particle-identification techniques, to be emitted in the 5.5-GeV proton bombardment of uranium do not include ^{13}Be. It is therefore particle unstable (Po 68b). (Ga 66c) predict that ^{13}Be is unbound with respect to ^{12}Be + n by 2.70 MeV.

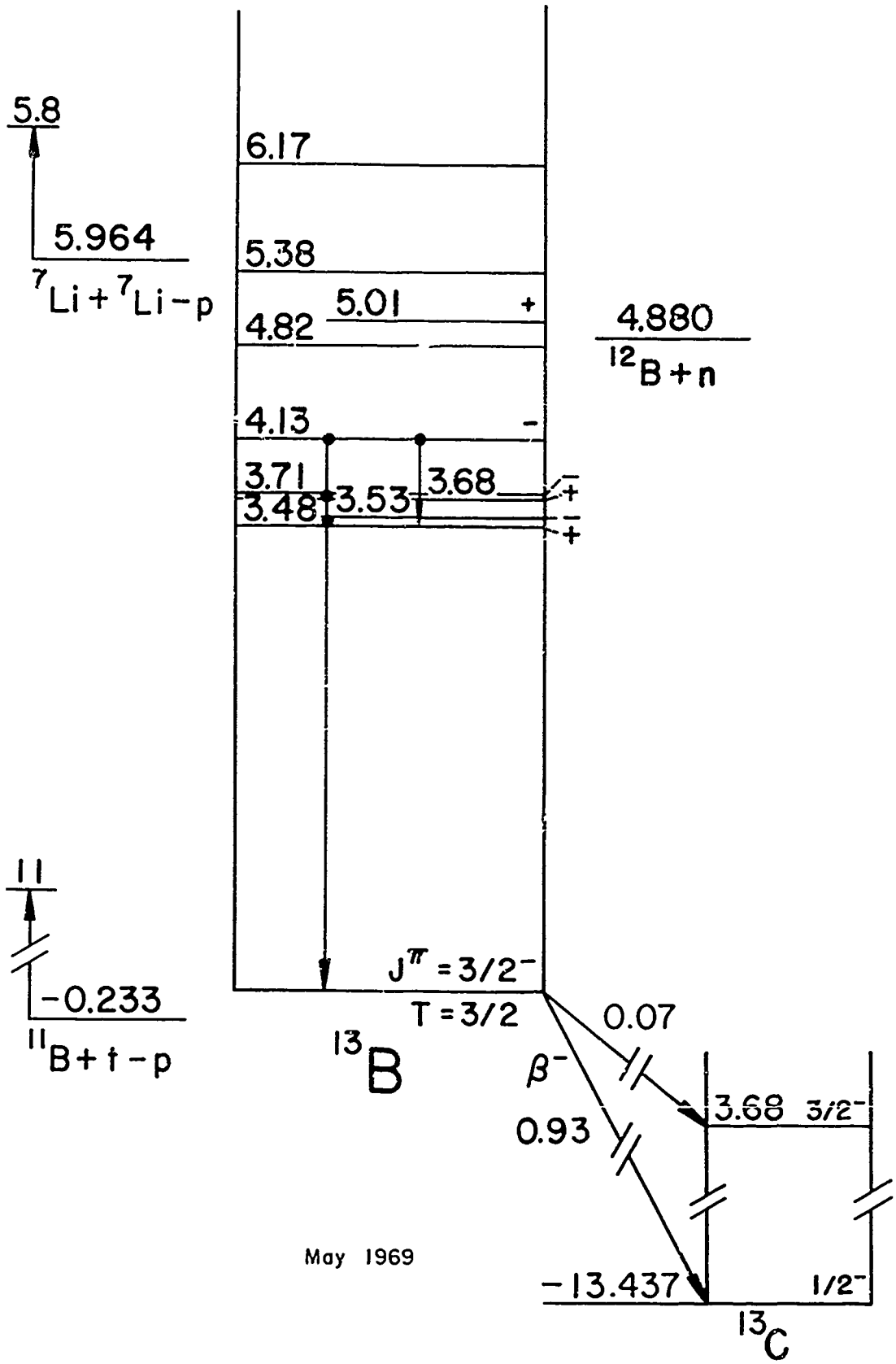
5.8
5.964
^{7}Li + ^{7}Li − p
6.17
5.38
5.01
+
4.82
4.880
^{12}B + n
4.13
−
3.71
3.68
3.48
3.53
−
+
−
+
11
−0.233
^{11}B + t − p
$J^\pi = 3/2^-$
T = 3/2
^{13}B
0.07
β^-
0.93
3.68
3/2$^-$
−13.437
1/2$^-$
^{13}C

May 1969

^{13}B

General: See (Ta 601, Mo 66).

1. $^{13}B(\beta^-)^{13}C$ $Q_m = 13.437$

The half-life of ^{13}B is 18.6 ± 0.5 msec. (A determination relative to ^{12}B gives 17.6 ± 0.4 msec.) The characteristics of the β^- decay are shown in Table 13.2. The allowed decay to ^{13}C ($1/2^-$, $3/2^-$) indicates $J^\pi = 1/2^-$ or $3/2^-$; the expected decay to ^{13}C ($5/2^-$) is not observed (Ma 62d). See also (Po 65b) and (Aj 59).

2. $^7Li(^7Li,p)^{13}B$ $Q_m = 5.964$

Proton groups have been observed to five states of ^{13}B: see Table 13.2 (Mo 59e, Ca 63d). Angular distribution measurements have been reported by (Wy 67a) in the range $E(^7Li)$ = 2.1 to 5.8 MeV. See also (Be 62m), (Aj 59) and ^{14}C.

3. $^{11}B(t,p)^{13}B$ $Q_m = -0.233$

$Q_o = -0.233 \pm 0.004$ MeV (Mu 60a)

At E_t = 11 MeV, proton groups are observed to ten states of ^{13}B: see Table 13.2. Angular distributions have been analyzed for seven of the ^{13}B levels (Mi 64e). The ground state is formed by L = 0 transfer, leading to an unambiguous assignment of $J^\pi = 3/2^-$. See also (Ja 60b, Ma 62d). See also (Ba 67hh).

Table 13.1. Energy Levels of ^{13}B

E_x (MeV ± keV)	$J^\pi;T$	$\tau_{1/2}$ (msec)	Decay	Reactions
0	$3/2^-;3/2$	18.6 ± 0.5	β^-	1,2,3
3.483 ± 5	$(1/2 \rightarrow 5/2)^+$		γ	2,3
3.533 ± 5	$(1/2,5/2,7/2)^-$		γ	2,3
3.681 ± 5	$(1/2 \rightarrow 5/2)^+$		γ	2,3
3.712 ± 5	$(1/2,5/2,7/2)^-$		γ	2,3
4.13 ± 10	$(1/2,5/2,7/2)^-$		γ	2,3
4.82 ± 10				3
5.01 ± 10	$(1/2 \rightarrow 5/2)^+$			2,3
5.38 ± 10		Γ = 15 ± 5 keV		2,3
6.17 ± 20				3

Table 13.2. Beta decay of ^{13}B (Ma 62d)

Decay to $^{13}C^*$ (MeV)	Branch (%)	log ft	E_{β^-} (max)
0	93 ± 1.5	4.01	13.4 ± 0.2
3.09	≤ 0.7	≥ 5.7	
3.68 [a]	7 ± 1.5	4.53	
3.85	≤ 0.7	≥ 5.5	
7.47 [b]	≤ 1.5	≥ 4.2	

[a] The observed E_γ = 3.67 ± 0.02 MeV.

[b] Decay to neutron unstable states of ^{13}C is ≤ 1.5% (Ma 62d); < 0.3% (Po 65b).

Table 13.3. Proton groups from $^{7}Li(^{7}Li,p)^{13}B$ and $^{11}B(t,p)^{13}B$

$^{7}Li(^{7}Li,p)^{13}B$ (Mo 59e, Ca 63d)	$^{11}B(t,p)^{13}B$ (Mi 64e)		
E_x (MeV ± keV)	E_x (MeV ± keV)	L	J^{π}
0	0	0[d]	$3/2^-$
	3.483 ± 5	1	$1/2^+,3/2^+,5/2^+$
3.50 ± 50[a]			
	3.533 ± 5	2	$1/2^-,5/2^-,7/2^-$
	3.681 ± 5	1	$1/2^+,3/2^+,5/2^+$
3.70 ± 50[b]			
	3.712 ± 5	2	$1/2^-,5/2^-,7/2^-$
4.16 ± 50[c]	4.13 ± 10	2	$1/2^-,5/2^-,7/2^-$
	4.82 ± 10		
5.05 ± 80	5.01 ± 10	1	$1/2^+,3/2^+,5/2^+$
5.5 ± 100	5.38 ± 10[e]		
	6.17 ± 20		

a The decay is by γ-emission to ^{13}B (0).

b The decay is primarily by γ-emission to the ground state: the upper limit to the cascade via ^{13}B (3.5) is 10%.

c The decay is 75 ± 10% to the ground state, 25 ± 10% to ^{13}B (3.5) and < 10% to ^{13}B (3.7).

d See also (Mu 60a).

e Γ = 15 ± 5 keV.

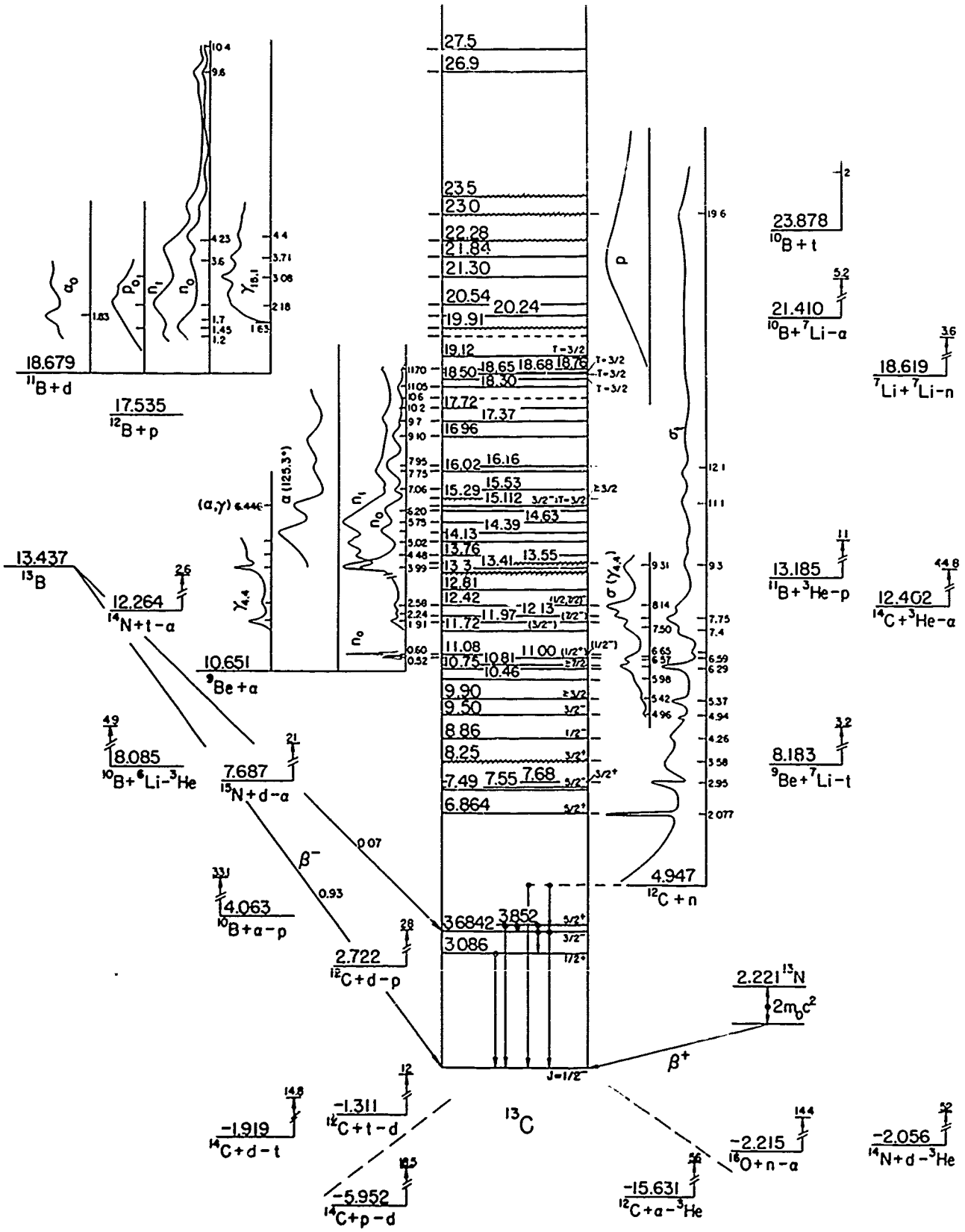
27.5
26.9
23.5
23.0
22.28
21.84
21.30
20.54
20.24
19.91
19.12
18.50
18.65
18.68
18.76
18.30
17.72
17.37
16.96
16.02
16.16
15.29
15.53
15.112
14.63
14.39
14.13
13.76
13.55
13.41
13.3
12.81
12.42
12.13
11.97
11.72
11.08
11.00
10.81
10.75
10.46
9.90
9.50
8.86
8.25
7.49
7.55
7.68
6.864
3.6842
3.852
3.086
J=1/2⁻
13C
18.679
11B+d
17.535
12B+p
13.437
13B
12.264
14N+t−α
10.651
9Be+α
8.085
10B+6Li−3He
7.687
15N+d−α
4.063
10B+α−p
2.722
12C+d−p
−1.919
14C+d−t
−1.311
12C+t−d
−5.952
14C+p−d
−15.631
12C+α−3He
−2.215
16O+n−α
−2.056
14N+d−3He
2.221 13N
2m0c2
β−
β+
0.07
0.93
4.947
12C+n
23.878
10B+t
21.410
10B+7Li−α
18.619
7Li+7Li−n
13.185
11B+3He−p
12.402
14C+3He−α
8.183
9Be+7Li−t

May 1969

^{13}C

General

Model calculations: (Br 59m, Ph 60a, Ta 60l, Ze 60, Ba 61l, Ba 61n, Ku 61a, Ku 61e, Ne 61c, Ea 62, Bo 63j, Ma 63s, Pe 63a, Se 63n, Tr 63, Am 64, Na 64a, St 64, Co 65i, Ma 65o, Me 65b, Ne 65, We 65d, El 66b, Gu 66d, Ha 66f, Ma 66s, No 66, Ri 66f, Wi 66e, Ba 67jj, Co 67m, Fa 67a, Hu 67c, Ku 67j, Po 67g, Ri 67j, Wa 67i, Fi 68, Ho 68)

Other: (Ba 62p, Li 64i, Bo 65e, He 66d, Ol 66b, Ri 68i, Wi 68b)

Ground state

μ = +0.702381 n.m. (Li 64h; see also (La 58d, Co 67r, Be 64l, Be 63t))

Table 13.4. Energy Levels of ^{13}C

E_x in ^{13}C (MeV ± keV)	$J^{\pi};T$	Γ(keV) or τ_m	Decay	Reactions
0	$1/2^-$	stable	-	2,3,4,9,10,12,13,14,15,16,21,22,23,24,25, 31,32,33,34,35,36,41,42,43,44,45,46,47, 48,49,50,51,52,53,54,55,56,57,59,60,61, 62,63,64,65
3.086±3	$1/2^+$	1.5±0.2 fsec	γ	9,12,13,14,22,24,31,32,37,42,45,49,50,54, 55,59,60,62
3.68415±0.11	$3/2^-$	1.4±0.2 fsec	γ	9,12,13,14,22,24,25,31,32,34,36,37,39,45, 49,50,51,52,54,55,59,60,62
3.854±2	$5/2^+$	$(9.0^{+2.5}_{-1.5})$ psec	γ	9,12,13,14,22,24,31,32,45,49,50,54,55, 59,60,62
6.864±3	$5/2^+$	6 kev	n	9,14,22,24,26,31,54,55,59,60
7.492±10		< 5		9,14,22,24,31,45,50,54,55,60
7.549±9	$5/2^-$	< 5		9,14,22,24,31,45,50,54,55,59,60
7.677±12	$3/2^+$	72±10	n	9,14,22,24,26,31,37,45,55,60
8.25±80	$3/2^+$	1000±200	n	26,31
8.858±14	$1/2^-$	155±20	n	22,24,26,37,54,55,59,60
9.504±7	$3/2^-$	< 10	n	14,22,24,26,27,31,54,55,59,60
9.896±10	≥ 3/2	≤ 30	n	14,22,24,26,27,31,55,60
10.46		200	n	14,27
10.748±14	≥ 7/2	$\lesssim$ 50	n	22,26,27,31,55
10.809±20		< 30	n	22,26,27,37,55
11.000±20	$(1/2^+)$	$\lesssim$ 50	n,α	5,22,26 27,37,55
11.078±20	$(1/2^-)$	< 4	n,α	5,14,22,26,27,55,59
11.721±30	$(3/2^-)$	125±20	n,α	26,27,37,55
11.97	$(7/2^-)$	≈ 150	n,α	5,14,27,54,55

Table 13.4 (continued)

12.131±30		125±30	n,α	5,14,22,26,27,55
12.42±50	$(1/2,7/2)^-$	≈ 200	n,α	5,26,27,30,59
12.81±100				22
13.3		5±1 MeV	"	38
13.41		60 keV	n,α	5,14
13.55		≈ 500	n,α	5,26,27
13.76		≈ 350	n,α	5
14.13		≈ 200	n,α	5
14.39±100		260	n,α	5
14.63		210	n,α	5
14.95±50		380	n,α	5
15.112±5	$3/2^-$;T=3/2	≤ 5	γ,α	4,5,22,41,51,59
15.29	≥ 3/2	450	n,α	5,26
15.53±50		220	n,α	5
16.02		210	n,α	5,14
16.16±50		230	n,α	5,14,26
16.96±50		330	n,α	5
17.37±100		190	n,α	5
17.72±50		170	n,α	5
(17.99)		40	n,α	5
18.30±50		300	n,α	5
18.504±25	T=3/2			22
18.648±15	T=3/2	≈ 35		22
18.679±20	T=3/2			22
18.76±30		70	n,α	5
19.123±10	T=3/2	≈ 35		22
(19.7)			n,d	17

Table 13.4 (concluded)

19.90	≈ 600	n,p,d	17,18
20.24	≈ 200	n,d,α	17,20
20.54±10	116±10	n,p,d	17,18
21.30±15	159±15	n,p,d	17,18
21.84±20	114±20	n,d	17
22.28	broad	n,p,d	17,29
23.0±200	~ 1 MeV	n,d	17,26
23.5	~ 3 MeV	γ,p	38
26.9		n,d	17
27.5		n,d	17

1. (a) $^{6}Li(^{7}Li,n)^{12}C$ $Q_m = 20.924$ $E_b = 25.871$
   (b) $^{6}Li(^{7}Li,p)^{12}B$ $Q_m = 8.337$
   (c) $^{6}Li(^{7}Li,2n)^{11}C$ $Q_m = 2.204$
   (d) $^{6}Li(^{7}Li,d)^{11}B$ $Q_m = 7.192$
   (e) $^{6}Li(^{7}Li,t)^{10}B$ $Q_m = 1.994$
   (f) $^{6}Li(^{7}Li,\alpha)^{9}Be$ $Q_m = 15.220$

Differential and total cross sections have been measured for $E(^{7}Li)$ = 3.8 to 6.0 MeV for the proton groups to $^{12}B^{*}$ (0, 0.95, 1.67, 2.6 + 2.7, 3.4), the deuteron groups to $^{11}B^{*}$ (0, 2.14, 4.44, 5.02, 6.74 + 6.79, 7.30), the triton groups to $^{10}B^{*}$ (0, 0.72, 1.74) and the α group to ^{9}Be (0). The dominant reaction appears to be the transfer of an α-particle. The total cross sections generally increase smoothly with energy without showing any structure (Ki 67a). See also ^{9}Be and ^{10}B in (La 66) and ^{11}B and ^{12}B in (Aj 68). The ^{11}C yield has been measured for $E(^{6}Li)$ = 1.2 to 3.6 MeV by (No 61). See also (No 57a, Ga 63g, Ka 63h, Ga 64c, Be 65a).

2. $^{7}Li(^{7}Li,n)^{13}C$ $Q_m = 18.619$

   See (No 57a, Be 62m).

3. $^{7}Li(^{11}B,\alpha n)^{13}C$ $Q_m = 9.954$

   See (Ho 63c).

4. $^{9}Be(\alpha,\gamma)^{13}C$ $Q_m = 10.651$

At $E_\alpha = 6.446 \pm 0.004$ MeV, corresponding to the excitation of the first T = 3/2 state in ^{13}C ($E_x = 15.114 \pm 0.005$ MeV, $\Gamma \leq 7$ keV), $\Gamma_\alpha\Gamma_\gamma/\Gamma \sim 2$ eV for the ground state transition. Capture radiation has also been observed to one of the three states $^{13}C^*$ (3.1, 3.7, 3.9) (Mi 66).

5. $^{9}Be(\alpha,n)^{12}C$ $Q_m = 5.704$ $E_b = 10.651$

Resonances for neutron groups to the ground and first excited states of ^{12}C, for γ-rays from $^{12}C^*$ (4.4) and resonances in the total neutron cross section are given in Table 13.5 (Aj 59, Se 63b, Gi 65, Gr 65h, Mi 66d, Da 68~~X~~ Da 68 Sg, Fo 67 I). See also ^{12}C in (Aj 68) and (Sm 59a, Br 59l, Ve 68). The yield of neutrons to $^{12}C^*$ (7.65) has been measured for E_α = 6 to 10.1 MeV (Mi 66d). Angular distributions of ground-state neutrons suggest two broad resonances in the region E_α = 3.9 to 4.6 MeV, probably $J^\pi = 3/2^+$ and $5/2^+$ (Ri 57). At the threshold for formation of the T = 3/2 state at 15.11 MeV, weak interference anomalies are observed in the n_o and n_1 yields (Mi 66).

Polarization measurements have been carried out for E_α = 1.9 to 4.5 MeV by (Li 65c: n_o and n_1) and for 4.5 to 5.9 MeV by (Do 66, De 67i: n_o, n_1). See also (Go 62p, Go 63l, Cl 65, Ts 65, Da 66k, De 66g).

6. $^{9}Be(\alpha,p)^{12}B$ $Q_m = -6.884$ $E_b = 10.651$

See ^{12}B.

Table 13.5. Resonances in $^{9}Be(\alpha,n)^{12}C$

E_α [a] (MeV)	E_α [b] (MeV)	E_α [c] (MeV)	$\Gamma_{c.m.}$ (keV)	J^π	$^{13}C^*$ [d] (MeV)	References
0.52	0.52		≈ 55 [e]	$(1/2^+)$	11.01	(Ja 56a, Da 68)
0.60	0.60		< 4 [e]		11.06	(Da 68)
1.9	1.905	1.92	130	$(7/2^-)$	11.97	(Ta 53, Be 54, Ta 55b, Bo 56d, Gi 65, Ja 56a)
2.24		2.25	280		12.20	(Bo 56d, Gi 65)
2.58	2.6	2.58	≈ 200	$(1/2^-)$	12.44	(Ta 53, Bo 56d, Ja 56a, Gi 65, Gr 65h)
4.00	3.98	4.00	60		13.41	(Bo 56d, Gi 59, Se 63b, Gi 65, Gr 65h)
4.18			570		13.55	(Ri 57, Gr 65h)
4.50	4.47	4.50	≈ 350		13.76	(Bo 56d, Gi 59, Se 63b, Gi 65, Gr 65h)
5.0	5.02	5.0	≈ 200		14.13	(Bo 56d, Se 63b, Gi 65, Gr 65h)
5.40±0.10	5.3		260		14.39±0.10	(Se 63b, Gr 65h, Mi 66d)
	5.75	5.75	210		14.63	(Gi 59, Se 63b, Gi 65, Gr 65h, Mi 66d)
6.20±0.05			380		14.95±0.05	(Gr 65h)
		(6.7)	broad		(15.29)	(Gi 65)
7.10±0.05	7.00		220		15.53±0.05	(Se 63b, Gr 65h, Mi 66d)
	7.75	7.8	210		16.02	(Gi 59, Se 63b, Gi 65, Gr 65h)
7.95±0.05			230		16.16±0.05	(Gr 65h, Mi 66d)
9.10±0.05		9.1	330		16.96±0.05	(Gi 65, Gr 65h, Mi 66d)
9.7 ±0.10	9.70		190		17.37±0.1	(Gr 65h, Mi 66d)
10.2±0.05			170		17.72±0.05	(Gr 65h, Mi 66d)
(10.60)			40		(17.99)	(Gr 65h)
11.05±0.05			300		18.30±0.05	(Gr 65h, Mi 66d)
11.70±0.03	11.60		70		18.76±0.03	(Gr 65h, Mi 66d)

14

Table 13.5 (concluded)

---

[a] Resonances in neutron yield.

[b] Resonances in n_1 group and for 4.4 MeV γ-rays.

[c] Resonances in total cross section.

[d] Not corrected for effects of Coulomb barrier penetration.

[e] $\omega\gamma$ = 3.79 and 0.88 eV, respectively (Da 68).

7. $^{9}Be(\alpha,d)^{11}B$ $Q_m = -8.028$ $E_b = 10.651$

See ^{11}B.

8. (a) $^{9}Be(\alpha,\alpha)^{9}Be$ $E_b = 10.651$

(b) $^{9}Be(\alpha,\alpha'n)^{8}Be$ $Q_m = -1.665$

(c) $^{9}Be(\alpha,n)3^{4}He$ $Q_m = -1.570$

A number of excitation functions have been measured for elastically scattered alpha particles (reaction a) for $E_\alpha = 4$ to 20 MeV: these show considerable resonance structure with the variations being most prominent below 10 MeV but persisting up to 20 MeV. Angular distributions were analyzed by the optical model (Ta 65b). See also ^{9}Be in (La 66) and (Fu 67i). For reactions (b) and (c), see (Aj 52c) and ^{8}Be in (La 66). See also (Ig 63).

9. $^{9}Be(^{7}Li,t)^{13}C$ $Q_m = 8.183$

At $E(^{7}Li) = 3.2$ MeV, triton groups are observed to the first eight states of ^{13}C (not all resolved). No triton groups are observed to the previously reported states at 5.51 and 6.10 MeV (Ca 64a).

10. $^{9}Be(^{14}N,^{10}B)^{13}C$ $Q_m = -0.963$

See (Gr 65s) and (El 66).

11. (a) $^{10}B(t,p)^{12}B$ $Q_m = 6.343$ $E_b = 23.878$

(b) $^{10}B(t,d)^{11}B$ $Q_m = 5.199$

(c) $^{10}B(t,\alpha)^{9}Be$ $Q_m = 13.227$

The p_o and p_1 yields from reaction (a), the d_o yield from reaction (b) and the α_o yield from reaction (c) have been determined for E_t = 0.8 to 2.0 MeV. There is no evidence of resonance behavior (Ho 63k).

12. $^{10}B(\alpha,p)^{13}C$ $Q_m = 4.063$

$Q_o = 4.0634 \pm 0.0024$ (Od 67)

Proton groups have been observed to the first four states of ^{13}C: see (Aj 59) and (Ed 62). Angular distributions of ground state protons have been measured at E_α = 4.9 to 8.1 MeV (Vo 57), 12.1 to 16.0 MeV (Iv 67a), 22 MeV (Ya 63a), 25.9 MeV (Te 63), 27.5 and 33.1 MeV (Ya 61) and at 30.4 MeV (Hu 59). See also (Ni 65a).

A study of gamma rays from this reaction and from $^{12}C(d,p)^{13}C$ shows three lines with E_γ = 0.1695 ± 0.0004, 3.844 ± 0.015 and 3.69 ± 0.02 MeV. The lifetime of $^{13}C^*$ (3.85) is $(9.0\ ^{+2.5}_{-1.5})$ psec (Ri 68h). See also (Di 59). The 3.69-MeV line shows approximately the maximum possible Doppler shift ($\tau < 3 \times 10^{-13}$ sec). [See also Table 13.16.] The 170-keV line is due to the cascade transition between the 3.84 and 3.68-MeV states; the internal conversion coefficient is consistent with E1, although M1 cannot be excluded. The probability of this cascade decay of the 3.84-MeV state is 0.24 ± 0.05 (Ma 56f). The cascade decay via the 3.09 MeV state has a strength relative to all other decays of $(9.3 \pm 2.0) \times 10^{-3}$. This branching ratio is of the order expected for an E2 transition of single-particle (proton) strength (Pi 60a). The angular distributions

and p-γ correlations for the 3.8-MeV radiation indicate $J^{\pi} = 5/2^{+}$ for the 3.84-MeV state. If the 170-keV line is due to an E1 transition, the J^{π} of the 3.68-MeV state is then $3/2^{-}$ ($J^{\pi} = 1/2^{-}, 3/2^{-}$ follows from $^{12}C(d,p)^{13}C$); the angular distribution of the 3.68-MeV radiation is consistent with M1 (St 54c): $\Gamma_{\gamma} = 0.40$ to 0.75 eV (Ka 60g). The 3.68-MeV state also decays via the 3.09-MeV state with a probability of $(6.5 \pm 1.0) \times 10^{-3}$ (Ka 60g). See also (El 60).

13. $^{10}B(^{6}Li,^{3}He)^{13}C$ $\qquad Q_m = 8.085$

The first four states of ^{13}C have been observed at $E(^{6}Li) = 4.89$ MeV (Mc 66a). See also (Ca 65e).

14. $^{10}B(^{7}Li,\alpha)^{13}C$ $\qquad Q_m = 21.410$

At $E(^{7}Li) = 5.20$ MeV, angular distributions have been measured for the α-particles to $^{13}C^{*}$ (0, 3.1, 3.7 + 3.9, 6.9). Alpha groups have also been observed to $^{13}C^{*}$ (7.5 + 7.7, 9.5, 9.9, 10.5, 11.1, 12, 13.5, 16.1) (Mc 66a). See also (Mi 63b, Mo 63j, Ca 65e).

15. (a) $^{10}B(^{14}N,^{11}C)^{13}C$ $\qquad Q_m = 1.143$

(b) $^{10}B(^{19}F,4\alpha)^{13}C$ $\qquad Q_m = -2.257$

For reaction (a) see (Co 66k); for reaction (b) see (Ho 63o).

16. $^{11}B(d,\gamma)^{13}C$ $\qquad Q_m = 18.679$

See (Su 61, Su 63, Su 66).

17. $^{11}B(d,n)^{12}C$ $Q_m = 13.732$ $E_b = 18.679$

The yield of neutrons has been measured for E_d = 0.2 to 11 MeV: observed resonant structure is displayed in Table 13.6 (Al 65h). See also (Aj 59, Ne 59, Cl 65d, Si 65, Hu 66). The yield of 15.1 MeV γ-rays shows 4 resonances for E_d = 1.5 to 5.5 MeV: see Table 13.6 (Ka 58a, Ku 64i). See also (Ki 63, Le 67g). Polarization of the neutrons has been studied at E_d = 1.4 to 1.9 (Ma 66z: n_o, n_1), 2 (Mi 67a: n_o, n_1, n_2, n_3, n_7), 2.8 (Ch 64f: n_o, n_1), 2.8 to 4.0 (Me 67f: n_o, n_1), 3.0 (Br 66dd: n_o), and 12.3 MeV (Sm 64a: n_o, n_1). See also (Br 59l) and ^{12}C.

18. $^{11}B(d,p)^{12}B$ $Q_m = 1.144$ $E_b = 18.679$

It is reported that the thin-target yield rises smoothly from E_d = 0.3 to 3.1 MeV with no evidence of resonances (Hu 49j, Ka 58a, Ro 63j, Sa 65g). However (Br 64k) reports a strong resonance at E_d = 2.3 MeV in the p_o, p_1 and p_2 yield. Analysis of yield curves of 0.95 and 1.67 MeV γ-rays (Ch 68b) also suggest a broad resonance at $E_d \sim 2.1$ MeV. See also (Se 63i). The polarization of ^{12}B recoils has been studied for E_d = 0.9 to 3.2 MeV: resonances in the recoil polarization are observed at $E_d \approx 1.5$, 2.1 and 3.0 MeV (see Table 13.6) (Pf 67a). See also (Be 67d). See also ^{12}B and (Ti 64a, Bo 67p, Ti 67a).

19. $^{11}B(d,d)^{11}B$ $E_b = 18.679$

See ^{11}B and (Ne 63h).

Table 13.6. Resonant Structure in $^{11}B + d$

Resonant Structure in Yield of								
n_o [a]	n_1 [a]	n_2 [a]	n_3 [a]	$\gamma_{15.1}$ [b]	p	α [d]	Γ_{cm} (keV)	E_x (MeV)
		(MeV ± keV)						
	1.2							19.7
1.45					1.5[f]		≈ 600	19.90
1.6	1.8[e]					1.83	≈ 200	20.24
	2.2[e]			2.180 ± 10	2.2[c,f]		116 ± 10	20.54
				3.080 ± 15	3.0[f]		159 ± 15	21.30
3.6				3.71 ± 20			114 ± 21	21.84
4.23	4.1	4.1		4.4			broad	22.28
	(5.2)							(23.1)
9.6	9.6	9.6	9.6					26.9
10.4		10.4	10.4					27.5

[a] (Al 65h, Di 67b).

[b] (Ka 58a, Ku 64i).

[c] Yield of p_o, p_1 and p_2 (Br 64k).

[d] Yield of α_o and α_2 (Du 64c); $\Gamma_{cm} \sim 200$ keV.

[e] (Al 65h) report a resonance at 1.8 MeV while (Di 67b) report one at 2.2 MeV, in addition to a sharper structure at 1.2 MeV.

[f] Resonances in polarization of ^{12}B recoils (Pf 67a).

20. $^{11}B(d,\alpha)^{9}Be$ $Q_m = 8.028$ $E_b = 18.679$

The excitation function for α particles to the ground state increases monotonically for $E_d = 0.39$ to 1.05 MeV (Ro 63j, Sa 65g); that for the α particles to $^{9}Be^{*}$ (2.43) increases monotonically for $E_d = 0.39$ to 0.70 MeV (Sa 65g). At $E_d = 1.83$ MeV, a pronounced resonance is observed in the α_o and α_2 yield: $\Gamma_{cm} \sim 200$ keV (Du 64c). Some gross structure is observed in these two yields for $E_d = 1.2$ to 3.2 MeV (Br 64k). See also (Dr 66e) and ^{9}Be in (La 66).

21. $^{11}B(t,n)^{13}C$ $Q_m = 12.422$

See ^{14}C.

22. $^{11}B(^{3}He,p)^{13}C$ $Q_m = 13.185$

$Q_o = 13.1854 \pm 0.0040$ (Od 67); see also (Ma 64ii)

Levels derived from reported proton groups are listed in Table 13.7. The proton groups thought to correspond to ^{13}C levels at $E_x = 5.51$ and 6.10 MeV (Mo 58f) come instead from the proton decay of $^{13}N^{*}$ (9.48, 10.37) fed in the reaction $^{11}B(^{3}He,n)^{13}N$ (Ch 66j). See also (Ga 63). At $E(^{3}He) = 8$ to 12 MeV, proton groups are observed to the first five $T = 3/2$ states of ^{13}C: see Table 13.7 (He 65d, He 66b). The angular distribution of the protons to the first $T = 3/2$ state at $E_x = 15.106$ MeV are consistent with $J^{\pi} = 3/2^{-}$ (the known character of ^{13}B (g.s.)) (He 65d). Preliminary results for the "isospin forbidden" neutron

decay of ^{13}C (15.10) to ^{12}C (0, 4.4) are $\Gamma_{n_0}/\Gamma = 0.041 \pm 0.015$ and $\Gamma_{n_1}/\Gamma = 0.23 \pm 0.03$ (Ad 67d): Compare $^{11}B(^3He,n)^{13}N$. ~~this is a violation of mirror-symmetry~~. Other angular distributions have been measured at $E(^3He) = 4.5$ MeV (Ho 57b; P_0: P_1, $(P_2 + P_3)$), and 8.6, 9.6 and 10.3 MeV (Ma 63g; p_0). See also (Al 59b, Cl 63a).

23. $^{11}B(\alpha,d)^{13}C$ $\qquad Q_m = -5.168$

Differential cross sections of deuterons corresponding to ^{13}C (0) have been measured at $E_\alpha = 23$ and 25 MeV (Al 68a). See also (Ze 68).

24. $^{11}B(^6Li,\alpha)^{13}C$ $\qquad Q_m = 17.207$

Angular distributions have been measured at $E(^6Li) = 4.72$ MeV to the ^{13}C ground state and to $^{13}C^*$ (3.1, 3.8 (unres.), 6.9, 7.5 (unres.)). The ^{13}C states at 8.85, 9.51 and 9.90 MeV have also been observed (Mc 66a). See also (Mo 63j, Ca 65e).

25. $^{12}C(n,\gamma)^{13}C$ $\qquad Q_m = 4.947$

$Q_0 = 4.94603 \pm 0.00015$ (Sp 68)

$Q_0 = 4.94647 \pm 0.00017$ (Pr 67d)

$Q_0 = 4.947 \pm 0.001$ (Ja 65k)

The thermal capture cross section is 3.4 ± 0.3 mb (St 64i). Reported γ-transitions are listed in Table 13.8. See also (Ma 63c). Fo 61I

22

Table 13.7. Levels of ^{13}C from $^{11}B(^{3}He,p)^{13}C$

E_x (MeV ± keV)	Γ_{cm} (keV)	References
0		(Mo 58f, Bi 55, Ga 63)
3.09		(Mo 58f, Bi 55, Ga 63)
3.68	< 5	(Mo 58f, Bi 55, Ga 63)
3.86	< 5	(Mo 58f, Ga 63)
6.871 ± 12	< 10	(Yo 59a, Ga 63)
7.500 ± 12	< 5	(Yo 59a, Ga 63)
7.554 ± 12	< 5	(Yo 59a, Ga 63)
7.694 ± 14	75 ± 15	(Yo 59a, Ga 63)
8.869 ± 36	175 ± 50	(Yo 59a)
9.509 ± 12	< 10	(Yo 59a)
9.896 ± 12	< 10	(Yo 59a)
10.9 ± 150		(Ga 57)
11.1 ± 150		(Ga 57)
12.08 ± 100		(Ga 57)
12.81 ± 100		(Ga 57)
15.106 ± 10[a]	≤ 5	(He 65d)
18.504 ± 25[a]		(He 66b)
18.648 ± 15[a]	~ 30-40	(He 66b)
18.679 ± 20[a]		(He 66b)
19.123 ± 10[a]	~ 30-40	(He 66b)

[a] It is suggested that these states have T = 3/2 (He 65d, He 66b).

Table 13.8. Neutron capture gamma rays in ^{13}C

E_γ (MeV ± keV)	Transition	Intensities [a] A	B	C	D
4.9458 ± 0.6	capt. → g.s.	68 ± 1			
4.94546 ± 0.17 [b]	"				
4.948 ± 8 [c]	"		70		
4.950 ± 15	"			75	
4.946	"				69
3.68428 ± 0.14	3.68 → g.s.	32 ± 1			
3.68394 ± 0.17 [b]	"				
3.68 ± 50	"		30		
3.68 ± 20	"			25	
3.680	"				31
1.26176 ± 0.07	capt. → 3.68	32 ± 1			
1.26192 ± 0.06 [b]					
1.260 ± 15				25	
1.27					30

[a] Gamma rays per 100 captures.

[b] (Pr 67d).

A: (Sp 68)

B: (Ba 53d); intensities of 3.1 and 3.9 MeV γ-rays < 10 and < 6, respectively.

C: (Gr 58a).

D: (Ja 61n).

[c] E_γ = 4.946 ± 1 (Ja 65k).

26. $^{12}C(n,n)^{12}C$ $E_b = 4.947$

The total cross section data up to 164 MeV is summarized in (St 64i). Angular distributions are summarized in (Go 63h). See also (Ga 66j, La 67q). The coherent scattering length (thermal, bound) is 6.6 Fm (Wi 61h). See also (Da 66k).

In the region E_n = 0 to 20 MeV a number of resonances have been reported: see Table 13.9 (Ts 60, La 61, Fo 61b, Li 66, Ha 64p, Ha 65l, Da 68j), and (Aj 59) for a listing of the earlier references. Table 13.10 lists recent cross section measurements: see also ^{12}C in (Aj 68), (St 64i) and (Ha 59e, De 66g).

Polarization measurements have been carried out with E_n up to 24 MeV: see Table 13.11 for recent references and (Aj 59) for earlier ones. See (Ha 63m, Da 66k, Ro 66w) for a general discussion of ^{12}C + n polarization.

See also (Ma 59g, Pr 59a, Pe 60, Sa 60l, Ku 63l, An 65c, De 65r, Fr 65b, Ch 67l, Ma 67e) and (Ke 59a, Wi 59c, Ho 60b, Mi 60g, To 60e, Bl 62c, Ca 62h, Ka 62f, Ed 63b, Ka 63f, Lu 63e, Mc 63b, Cr 64d, Sl 65, Co 66g, Ja 66f, Le 66o, Se 66d, Pi 67a, Re 67b, Ro 67, Sc 67h, Ta 67c, Ch 68e, Ko 68e, Ti 68).

27. (a) $^{12}C(n,n')^{12}C^*$ $E_b = 4.947$

(b) $^{12}C(n,n')3\,^4He$ $Q_m = -7.274$

From threshold to E_n = 9.8 MeV, ten resonances are observed in the

Table 13.9. Resonances in $^{12}C(n,n)^{12}C$

E_{res} (MeV ± keV)	Γ_{cm} (keV)	$^{13}C^*$ (MeV)	ℓ_n	J^π	θ^2	References [a]
		3.09			0.20±0.02	Se 63l
2.077 ± 3	6	6.864	2	$5/2^+$		Pl 63, La 61, Da 68j
2.95		7.67	2	$3/2^+$		
3.58 ± 80	1000 ± 200	8.25	2	$3/2^+$	0.35	Fo 61b, Li 66, Ts 60
4.26 ± 30	180 ± 50	8.88	1	$1/2^-$	0.03	Fo 61b, Li 66, Ts 60
4.94 ± 10	≤ 10	9.50				Fo 61b, Ts 60
5.37	30	9.90		≥3/2		Fo 61b[c]
6.29	65	10.75		≥7/2		Fo 61b[c]
6.5[b]		10.9				Fo 61b
6.59[b]		11.03				Fo 61b[c]
6.7[b]		11.1				Fo 61b
(7.4)	(250)	(11.8)		(≥5/2)		Fo 61b
7.75	(200)	12.10		(≥7/2)		Fo 61b[c]
(8.1)	(150)	(12.4)				Fo 61b
9.3	370	13.5				Fo 61b
11.1	450	15.2		(≥3/2)		Fo 61b
12.1	230	16.1				Fo 61b
19.6 ± 0.2	~ 1000	23.0				Ha 64p, Ha 65l

[a] See (Aj 59) for earlier references; see also (St 64i).

[b] These three structures may be part of the same resonance (Fo 61b).

[c] I am indebted to J. C. Davis and H. H. Barschall for sending me these revised values based on a change in the calibration of the analyzing magnet used by (Fo 61b).

Table 13.10. ^{12}C + n Total Cross Section Measurements[a]

E_n (MeV)	References	E_n (MeV)	References
0.003 → 10 eV	(Wa 60a)	3.3 → 5.0	(Ts 60)
1.44 eV	(Ra 65)	3.4 → 16	(Fo 61b)
0.003 → 0.66	(Se 631)	5.6	(Br 60b)
0.01 → 0.50	(Mo 66f)	7.0 → 14.3	(Ma 64gg)
0.15 → 0.2	(Bi 59)	15 → 120	(Bo 61a)
0.18 → 0.70	(Wi 61a)	17 → 21	(Ha 64p, Ha 651)
0.2 → 140	(La 66n)	17.8,20.6,25.3,28.3,29.1	(Pe 60f)
0.50 → 1.35	(Hu 60)	88 → 151	(Me 66i)
2.61 → 2.83	(So 65)		
3.10 → 15	(Gl 63a)		

[a] See (Aj 59) and (St 64i) for earlier references.

Table 13.11. $^{12}C(n,n)^{12}C$ Polarization Studies[a]

E_n (MeV)	Neutron groups	References
0.4 → 2.4	n_o	(El 62)
0.5 → 2.0	n_o	(La 67q)
0.8, 1.2	n_o	(Be 63e)
1.0 → 2.2	n_o	(As 64b, As 66b, As 67b)
2 → 4	n_o	(Bu 59d)
2.4, 2.7	n_o	(Sa 64b)
2.8	n_o	(Iy 62)
2.8 → 4.7	n_o	(We 65)
3.2	n_o	(St 59)
3.5	n_o	(Ot 62)
4	n_o	(Go 64h)
4.4 → 8.5	n_o	(Ke 65c)
14.7	n_o, n_1	(Br 65a, Zo 67)
15.85	n_o, n_1	(Ma 67s, Ma 68r, Me 68g)
24	n_o	(Wo 62a)

[a] See (Aj 59) for earlier references. See also (Du 60).

yield of 4.4 MeV γ-rays: see Table 13.12 (Ha 59n). Cross sections have also been measured for various of the inelastic transitions for E_n = 5.5 to 14.1 MeV by (Pe 64h, Wi 65c, Ha 59e, Be 60g, Cl 64b, Bo 63e, St 64g, Si 59b). See (Aj 59) for a listing of the earlier references. See also (Ga 59d) and ^{12}C.

For reaction (b), see ^{12}C and (Aj 59).

28. $^{12}C(n,2n)^{11}C$ $Q_m = -18.720$ $E_b = 4.947$

See (Br 61d, Br 52e, As 58).

29. (a) $^{12}C(n,p)^{12}B$ $Q_m = -12.588$ $E_b = 4.947$

(b) $^{12}C(n,np)^{11}B$ $Q_m = -15.957$

The cross section for reaction (a) has been measured from threshold to E_n = 22 MeV (Kr 59a, Ri 68d). It exhibits a strong resonance with a peak cross section of 19 mb at $E_x \approx 22$ MeV in ^{13}C and another weaker resonance corresponding to $E_x \approx 20.5$ MeV (Ri 68d). See also (Al 59a, Le 63i, Je 66a).

For reaction (b) see (Au 62b).

30. $^{12}C(n,\alpha)^{9}Be$ $Q_m = -5.704$ $E_b = 4.947$

The cross section for the transition to ^{9}Be (0) shows a broad structure at $E_n \approx 8$ MeV (Da 63b). See also (Ch 63d, Al 63e, Hu 66e, Ko 67p) and ^{9}Be in (La 66).

Table 13.12. Resonances in $^{12}C(n,n'\gamma_{4.4})^{12}C$ (Ha 59n)

E_n (MeV)	Γ_{cm} (keV)	E_x in ^{13}C (MeV)
4.96	< 80	9.52
5.42	< 80	9.95
5.98	200	10.46
6.35	120	10.79
6.57	< 80	11.01
6.65	< 80	11.08
7.50	260	11.87
7.81	180	12.15
8.14	220	12.46
9.31	500	13.54

31. (a) $^{12}C(d,p)^{13}C$ $Q_m = 2.722$

(b) $^{12}C(d,np)^{12}C$ $Q_m = -2.225$

$Q_o = 2.725 \pm 0.005$ (Lo 61d)

$Q_o = 2.7223 \pm 0.00061$ (Od 67)

Measurements on the proton groups are summarized in Table 13.13. In addition to a number of relatively sharp states, the proton spectrum exhibits a conspicuous broad structure attributed to a ^{13}C level at $E_x = 8.4$ MeV, $\Gamma = 1.1 \pm 0.3$ MeV. [It seems probable that this level is to be identified with the $D_{3/2}$ level of similar width observed in $^{12}C(n,n)^{12}C$ at $E_x = 8.25$ MeV: see Table 13.9.]

Angular distributions have been studied at many energies, and analyzed by PWBA and DWBA. A listing of the early work is given in (Aj 59). Recent experiments are listed in Table 13.14. See also (Ga 65i).

A DWBA stripping description of the direct reaction interaction part of the reaction almost certainly will require the use of spin dependent potentials. There is pronounced compound nucleus formation even up to $E_d = 11$ MeV (Ev 63a, Sc 67l).

Observed gamma rays are listed in Table 13.15. The cascade decay of the 3.85 MeV state (via $^{13}C^*$ (3.68)) occurs in $37 \pm 4\%$ of the decays; the direct transition occurs in $62 \pm 4\%$ of the events (Go 66a). The mixing ratio for the transition $3.68 \rightarrow 0$ $\chi(E2/M1) = -(0.096^{+0.030}_{-0.021})$,

Table 13.13. Levels of ^{13}C from $^{12}C(d,p)^{13}C$

$^{13}C^*$ (MeV ± keV)						
(St 51, Va 51a)	(Sp 54e)	(Do 56c, Ja 61m)	(Mc 55c)	ℓ_n	J^π	θ_n(%)[f]
0	0		0	1[d]	$1/2^-, 3/2^-$	2.6[g]
3.086 ± 6	3.090 ± 10	3.093 ± 6	3.09[a]	0[d]	$1/2^+$	14[h]
3.686 ± 11	3.684 ± 10	[3.681 ± 3]	3.68[a]	1[d]	$1/2^-, 3/2^-$	0.7
	3.855 ± 7	[3.851 ± 3]	3.84[a]	2[d]	$3/2^+, 5/2^+$	4.7
			6.87[a]	(0,2)[e]	($\leq 5/2^+$)	
			7.470 ± 20			
			7.533 ± 20			
			7.641 ± 20[b]			
			8.4 ± 300[c]			
			9.500 ± 20			
			9.897 ± 20			
			10.759 ± 20			

[a] Energies given for identification only.

[b] $\Gamma = 70 \pm 15$ keV.

[c] $\Gamma = 1.1 \pm 0.3$ MeV.

[d] See (Aj 59) for early references.

[e] (Mc 55c).

[f] PWBA and DWBA analyses: $E_d = 8$ and 12 MeV (Gl 66c).

[g] 3.7 ± 0.3 (Ha 61e), 3.5 (Sc 64e); see also (Ka 66b).

[h] 15.7 (Sc 64e).

Table 13.14. $^{12}C(d,p)^{13}C$ Angular Distribution Studies[a]

E_d (MeV)	Distributions of proton groups	References
0.7 → 1.7	P_o	(Wi 65k)
0.9 → 1.75	P_o, P_1	(Po 67e, Kl 66)
1.2 → 4.5	P_o	(Ga 66b)
1.7, 2.7, 3.1, 4.0	P_o, P_1, P_2, P_3	(Fi 65)
2.1 → 2.9	P_1, P_2, P_3	(Ka 66b)
2.1 → 3.1	P_o	(Se 59)
2.8 → 3.7	P_2, P_3	(Ge 63)
4	P_1	(Se 60b)
4.7 → 13.3	P_o	(Za 60)
6.6	P_o, P_1	(Zh 62)
7 → 11	P_o, P_1	(Ev 63a)
8, 12	P_o, P_1, P_2, P_3	(Gl 66c)
9.2 → 13.9	P_o, P_1	(Ga 66af)
10.2, 12.4, 14.8	P_o, P_1	(Ha 61e, Ha 59b)
11, 13	P_o, P_1, P_2, P_3	(Sc 66g)
11.8	P_o, P_1	(Sc 64e)
12	P_o, P_2	(Sc 67l)
12.1, 13.3	P_1, P_2, P_3	(Za 60)
13.3	P_o	(Ma 66ss)
14.9 → 19.6	P_o, P_1, P_2, P_3	(Mo 60b)
14.5	P_o, P_2, P_5	(Ka 68c)
25.9	P_o, P_1	(Va 63i)
27.7	P_o, P_2	(Sl 62a)

[a] See (Aj 59) for earlier references. See also ^{14}N.

Table 13.15. Gamma Radiation from $^{12}C(d,p)^{13}C$

E_γ [a] (MeV ± keV)	E_γ [b] (MeV ± keV)	References
3.86 ± 20	(3.84 ± 30)	(Be 55a)
3.844 ± 15		(Ma 56f)
3.863 ± 15		(Go 61q)
0.1695 ± 0.4 [e]		(Ma 56f; see also Ch 60a)
(3.76 ± 20) [c]	3.74 ± 30	(Be 55a)
(3.69 ± 20) [c]	3.675 ± 15 [d]	(Ma 56f)
(3.687 ± 15) [c]		(Go 61q)
(3.097 ± 5) [c]	3.082 ± 7	(Th 52)
(3.110 ± 12) [c]		(Go 61q)

[a] Uncorrected for Doppler shift.

[b] Corrected for Doppler shift.

[c] Doppler shift correction is not required for the 3.86-MeV radiation, but is required for the 3.09 and 3.68-MeV radiation (Ma 56f, Th 52).

[d] Value obtained by subtraction: 3.844-0.170 (Ma 56f).

[e] From the proton groups ΔE = 170 ± 3 keV (Sp 54e) and 170 ± 1.5 keV (Do 56c).

while for the transition 3.85 → 0, χ(E3/M2) = +(0.12 ± 0.03). Angular correlation measurements at E_d = 2.8 to 3.7 MeV show $\Gamma(E2)/\Gamma_\gamma \lesssim 5\%$ for $^{13}C^*$ (3.68) and $\Gamma(E3)/\Gamma_\gamma \lesssim 2\%$ for $^{13}C^*$ (3.85) (Fl 62). See also (Ka 66b, Pr 66e, Ti 67a). The lifetime of $^{13}C^*$ (3.09) is < 10 fsec (Ri 68h), < 15 fsec (Al 68) [see also (Me 67b)]; τ_m for $^{13}C^*$ (3.68) < 26 fsec (Ri 68h); τ_m for $^{13}C^*$ (3.85) = $7.5\ ^{+3}_{-2}$ psec (Si 62b): see also Table 13.16

A study with polarized deuterons at E_d = 7 and 10 MeV is reported by (Yu 68a: p_o, p_1). For other polarization measurements see ^{14}N, (Aj 59) and (Go 61m). For reaction (b), see (Pi 63a, Bo 68e).

See also (Ar 58a, Lo 59, Al 60h, Ba 60t, Go 61k, Pu 61, St 61d, Al 62a, Gr 62d, Ne 63d, Ne 63e, Se 63j, Va 63k, Ri 64, He 65c, Zi 65, Be 66k, Go 66f, Go 66g, Wa 67i, Fo 68) and (Am 59, Bo 59d, Ho 59e, Be 60h, Bu 60e, Lu 60, Ne 60, Gi 61, Ro 61a, Jo 62c, Gl 63d, Sm 63a, Ta 63, Va 64e, Za 64d, Ba 65aa, St 65a, Ho 66i, Pe 66d, Le 67k, Mo 67e, Be 68h, Ed 68a).

32. $^{12}C(t,d)^{13}C$ $\qquad Q_m = -1.311$

At E_t = 12 MeV, DWBA fits have been made of the angular distributions of the deuterons to ^{13}C (0, 3.09, 3.68, 3.85) (Gl 66c). See also (Ba 61c, Mu 60a).

33. $^{12}C(^3He,2p)^{13}C$ $\qquad Q_m = -2.771$

See (Do 65b, Fo 67c, He 67e).

34. $^{12}C(\alpha,{}^{3}He)^{13}C$ $Q_m = -15.631$

At $E_\alpha = 56$ MeV, angular distributions of the ^{3}He particles to ^{13}C (0, 3.7) have been analyzed by DWBA (Sy 67).

35. (a) $^{12}C(^{11}B,{}^{10}B)^{13}C$ $Q_m = -6.509$

(b) $^{12}C(^{14}N,{}^{13}N)^{13}C$ $Q_m = -5.606$

(c) $^{12}C(^{19}F,{}^{18}F)^{13}C$ $Q_m = -5.483$

For reaction (a) see (Sa 631, Po 67a). For reaction (b), see (Ga 65g, Bi 67). For reaction (c), see (Ga 68b).

36. $^{13}B(\beta^-)^{13}C$ $Q_m = 13.437$

^{13}B β^- decays to the ground and 3.68-MeV states of ^{13}C: see ^{13}B and Table 13.2 (Ma 62d).

37. $^{13}C(\gamma,\gamma)^{13}C$

By means of nuclear resonant scattering of bremsstrahlung, τ_m of $^{12}C^*$ (3.09) = 1.5 ± 0.2 fsec (Ro 68a): τ_m of $^{12}C^*$ (3.68) = 1.4 ± 0.2 fsec (Sw 68b).

38. $^{13}C(\gamma,n)^{12}C$ $Q_m = -4.947$

The cross section appears to exhibit structure at ≈ 7.8, 8.9, 10.9 and 11.6 MeV (Be 65i) and at 13.3 ± 1 (Γ = 5 ± 1 MeV) and at ≈ 22 MeV ($\Gamma \approx 7$ MeV) (Co 57b). For analyses of the work done on this reaction, see (Ha 63e, Me 65b). See also (Ed 60, Gr 64j) and (Fu 59, Fr 60b, Ba 611, Fr 64c, Sh 64m).

39. $^{13}C(\gamma,p)^{12}B$ $Q_m = -17.535$

(De 64i) report structure at E_γ = 18.5, 20.0, 23.5, 26.0 and 29.0 MeV. The main part of the cross section is in the 23.5 MeV peak which has $\Gamma \approx 3$ MeV. A broad maximum near 25.5 MeV has been reported by (Co 56b, Co 56f). See also (Me 65b) and (Ne 62f, Ko 64c).

40. $^{13}C(\gamma,\alpha)^{9}Be$ $Q_m = -10.651$

See (Mi 53c, Gr 64d).

41. $^{13}C(e,e)^{13}C$

From a study at E_e = 250 MeV, the ratio of the rms radius of the charge distribution for ^{13}C to that of ^{12}C is found to be 0.96 ± 0.01 (Cr 67b). See also (Ra 68a). The M1 radiation width to the ground state of $^{13}C^*$ (15.11) excited by 40 to 65 MeV electrons is 25 ± 7 eV (Pe 67g) in good agreement with the prediction of (Co 65i). See also (Ka 67e).

42. $^{13}C(p,p')^{13}C^*$

Angular distributions of the 3.09-MeV γ-rays are isotropic for E_p up to 5 MeV consistent with the assignment J = 1/2 (Ba 60f). The elastic differential cross section has been studied for E_p = 1.37 to 2.38 MeV (Ge 66), and at E_p = 32.9 MeV (Ma 68h). See also (Ro 61a). The Doppler shift method leads to lifetime limits of $\tau < 10$ fsec and $\tau < 26$ fsec for $^{13}C^*$ (3.09, 3.68) (Ri 68h): see Table 13.16.

43. $^{13}C(d,d)^{13}C$

Angular distributions of elastically scattered deuterons have been measured at E_d = 4.7, 5.0 and 5.3 MeV (Co 68h) and 15 MeV (Di 65a). See also ^{15}N.

44. $^{13}C(^3He, ^3He)^{13}C$

Angular distributions of elastically scattered ^3He's have been studied at $E(^3He)$ = 12, 15 and 18 MeV (Ke 66b). See also (Ar 68e, Ce 68).

45. $^{13}C(\alpha,\alpha)^{13}C$

Angular distributions of scattered α-particles have been studied at E_α = 33.4 MeV (Ar 68e: $^{13}C^*$ (0, 3.68, 7.5) and 40.5 MeV (Ha 66i: $^{13}C^*$ (0, 3.09, 3.68 + 3.85, 7.5)). See also (Fu 59a, Fa 68).

46. (a) $^{13}C(^6Li,^6Li)^{13}C$
(b) $^{13}C(^7Li,^7Li)^{13}C$

Angular distributions of elastically scattered ^6Li and ^7Li ions have been measured at E(Li) = 20 MeV (Be 68k).

47. (a) $^{13}C(^{12}C,^{12}C)^{13}C$
(b) $^{13}C(^{16}O,^{16}O)^{13}C$

Angular distributions of elastically scattered ^{12}C and ^{16}O ions have been studied for E = 10 to 30 MeV (Go 68i).

Table 13.16. Summary[a] of results on the total radiation widths of the low-lying levels of ^{13}C - ^{13}N

$^{13}C^*$ (MeV)	Γ_γ (eV)	Method[b]	References	$^{13}N^*$ (MeV)	Γ_γ[c] (eV)	References
3.09	0.44 ± 0.05	(γ,γ)	(Ro 68a)	2.37	0.45 ± 0.05	(Ri 68h)
	> 0.066	DS	(Ri 68h)		0.67	see (Aj 59)
3.68	> 0.025	DS	(Ri 68h)	3.51	0.53	(Yo 63a)
	0.47 ± 0.07	(γ,γ)	(Sw 68b)		0.69	see (Aj 59)
3.86	$(7.3 \pm 1.6) \times 10^{-5}$	DS	(Ri 68h)	3.56	$<200 \times 10^{-5}$	(Yo 63a)
	$(8.8 \pm 3.0) \times 10^{-5}$	DS	(Si 62b)			
	$(4.4 \pm 0.6) \times 10^{-5}$	DS	(Al 68)			

a (Ri 68h)

b DS = Doppler Shift.

c Obtained from $^{12}C(p,\gamma)^{13}N$.

48. $^{13}N(\beta^+)^{13}C$ $Q_m = 2.221$

See ^{13}N.

49. $^{14}C(p,d)^{13}C$ $Q_m = -5.952$

At E_p = 12 MeV, the angular distribution of the deuterons to ^{13}C (0) is PWBA-fitted with ℓ=1: θ^2= 0.038 (Gl 66c). At E_p = 18.5 MeV, angular distributions have also been obtained for $^{13}C^*$ (3.09, 3.68, 3.86) (Le 63, Le 61g).

50. $^{14}C(d,t)^{13}C$ $Q_m = -1.919$

At E_d = 12 MeV, angular distributions of the tritons to ^{13}C (0, 3.09, 3.68, 3.85) have been PWBA fitted: θ^2 = 14.5, 0.43 and 5.76 for the three most energetic triton groups. The group to ^{13}C (3.85) does not show a stripping pattern (Gl 66c). See also (Mo 58e, Ku 59d).

51. $^{14}C(^3He,\alpha)^{13}C$ $Q_m = 12.402$

Angular distributions of the alpha particles to ^{13}C (0) have been determined at $E(^3He)$ = 2, 6, 8, 10 (Du 64d) and 44.8 MeV (Ba 66q). See also (Ba 67vv). At the highest energy, the differential cross sections to $^{13}C^*$ (3.68) and to the T = 3/2 state at 15.11 MeV have also been measured (Ba 66q). See also (Go 66e).

52. $^{14}N(n,d)^{13}C$ $Q_m = -5.325$

Angular distributions of ground state deuterons have been determined

at E_n = 14.1 to 14.7 MeV (Za 63, An 67, Fe 67d, Mi 68d). Excitation of $^{13}C^*$ (3.68) is also reported (Za 63, Fe 67d, Ca 57e).* See also (Ha 59c, Mo 63, Mo 64j).

53. $^{14}N(p,2p)^{13}C$ $Q_m = -7.550$

At E_p = 460 MeV, the summed proton spectrum shows three peaks with binding energies 7.5 ± 0.5, 15.3 ± 0.5 and 19.8 ± 0.6 MeV ($^{13}C^*$ = 0, 7.8 and 12.3 MeV) corresponding to the ejection of $p_{1/2}$ protons in the case of the ground state and $p_{3/2}$ protons in the case of the two excited states. There is also some indication of other structure (Ty 66). At E_p = 19 MeV, the reaction proceeds at least in part by a two-step process involving an excited state of ^{14}N at ~ 11.2 MeV (De 65l, De 65m). See also (Cl 61c, Cl 63c, Ma 62s) and (Ba 62j, Ba 62o, El 63a, Ba 65s).

54. $^{14}N(d,^3He)^{13}C$ $Q_m = -2.056$

At E_d = 52 MeV, angular distributions have been measured for the ^3He particles to $^{13}C^*$ (0, 3.09, 3.68, 6.87, 7.5, 8.85, 9.51, 11.9 ± 0.15) and analyzed by DWBA: $J^\pi = 5/2^-$, $1/2^-$, $3/2^-$ and $3/2^-$, respectively, are assigned to $^{13}C^*$ (7.5, 8.85, 9.51, 11.9) (Hi 68c). As expected, angular distributions of ^3He's and of tritons (from $^{14}N(d,t)^{13}N$) to analogue states are identically the same: this has been shown for the ground state ^3He and triton groups (De 66h: E_d = 28.5 MeV) and for the groups to $^{13}C^*$ (8.9 + 9.5) and $^{13}N^*$ (9.2) (Hi 68c: E_d = 52 MeV). See also (Ba 68p).

---

* Gamma rays with energies of 3.686 ± 0.003 and 3.853 ± 0.003 MeV are reported by (Be 69b).

55. $^{14}N(t,\alpha)^{13}C$ $Q_m = 12.264$

Observed particle groups at $E_t = 2.6$ MeV are displayed in Table 13.17 (Si 62b). See also (Sc 64b) and ^{16}O.

56. $^{14}N(\alpha,p\alpha)^{13}C$ $Q_m = -7.546$

This sequential reaction has been studied at $E_\alpha = 22.9$ MeV (Be 67kk).

57. $^{14}N(^{14}N,^{15}O)^{13}C$ $Q_m = -0.257$

See (Ga 66a).

58. $^{15}N(n,t)^{13}C$ $Q_m = -9.903$

Not reported.

59. $^{15}N(p,^3He)^{13}C$ $Q_m = -10.667$

At $E_p = 43.7$ MeV, ^3He groups have been observed to eleven states of ^{13}C: see Table 13.17 (Fl 68, Ce 66): see Table 13.13. Angular distributions of the ^3He particles to these states are generally found to be in agreement with DWBA predictions, using intermediate coupling wave functions to obtain the two-nucleon structure factors (Fl 68). Detailed comparisons are made with the results of the mirror reaction $^{15}N(p,t)^{13}N$: the (p,t) transitions are generally stronger than expected relative to the mirror (p,^{3}He) transitions. This may arise from interference effect terms due to a spin-orbit interaction in the optical potential, or to interference terms between direct-reaction and core-excitation (Fl 68a, Fl 68).

Table 13.17. Energy levels of ^{13}C from $^{14}N(t,\alpha)^{13}C$ (Si 62a) and from $^{15}N(p,^{3}He)^{13}C$ (Fl 68).

E_x in ^{13}C [a] (MeV ± keV)	Γ_{cm}	E_x in ^{13}C [b] (MeV ± keV)	J^{π}
0		0	$1/2^-$
3.09[c]		3.08 ± 20	$1/2^+$
3.68[c]		3.68[c]	$3/2^-$
3.85[c]			
6.87[c]		6.87[c]	$5/2^+$
7.5[c]		7.55 ± 20	$5/2^-$
7.68[c]			
8.860 ± 20	145 ± 20	8.86 ± 60	$1/2^-$
9.509[d]		9.52 ± 30	$(3/2^-)$
9.897[d]			
10.736 ± 20	< 30		
10.809 ± 20	< 30		
11.000 ± 20	< 30		
11.078 ± 20	< 30	11.09 ± 50	$(1/2^-)$
11.721 ± 30	125 ± 20	11.80 ± 30	$(3/2^-)$
12.131 ± 30	125 ± 30		
		12.40 ± 50	$7/2^-$
		15.103 ± 45[e]	$3/2^-$

[a] From $^{14}N(t,\alpha)^{13}C$ (Si 62a).
[b] From $^{15}N(p,^{3}He)^{13}C$ (Fl 68).
[c] Observed but E_x not decermined.
[d] E_x values of other levels given in terms of E_x of these two levels.
[e] (Ce 66).

Table 13.18. ^{13}C states from $^{15}N(d,\alpha)^{13}C$

(Ma 51) (MeV ± keV)	(Ja 61m) (MeV ± keV).	(Wa 57) (MeV ± keV)[a]
0	0	0
3.083 ± 5	3.100 ± 20	3.09
3.677 ± 5	3.695 ± 10	3.68
		3.85
		6.87
		7.47, 7.53, 7.64 [b]
		8.80 ± 40
		9.5
		9.9

[a] Level energies for identification purposes only except for $^{13}C^*$ = 8.80 MeV.

[b] Not resolved.

60. $^{15}N(d,\alpha)^{13}C$ $Q_m = 7.687$

$Q_o = 7.675 \pm 0.009$ (Lo 61f)

Observed alpha particle groups are displayed in Table 13.18 (Ma 51, Ja 61m, Wa 57). Angular distributions of α-particles have been measured at E_d = 1.0 to 1.2 MeV (St 66q: α_o), 20.9 MeV (Pr 68a: α_o, α_1) and 21 MeV (Fi 59: α_o). See also (Ma 65k, Lo 61b).

61. $^{15}N(\alpha,^6Li)^{13}C$ $Q_m = -14.688$

At E_α = 42 MeV, the angular distribution of the ^6Li particles to ^{13}C (0) has been measured (Mi 68e).

62. $^{16}O(n,\alpha)^{13}C$ $Q_m = -2.215$

At E_n = 14.1 to 14.9 MeV angular distributions of alpha particles have been measured: see (Ci 61, Mc 66f, Le 68j: α_o), (Hs 67a: α_o, α_1, $\alpha_2 + \alpha_3$), (Ma 68j: α_o, $\alpha_1 + \alpha_2 + \alpha_2$).* See also (Aj 59, Ro 62b, Da 63b, Mo 63, Se 63d, Ma 64m, Mo 64j, Ch 65b, Ci 66a, Fa 66, Si 67e).

63. $^{17}O(d,^6Li)^{13}C$ $Q_m = -4.885$

See (De 66a).

64. $^{18}O(d,^7Li)^{13}C$ $Q_m = -5.678$

See (Cr 63a, De 67).

65. $^{20}Ne(n,2\alpha)^{13}C$ $Q_m = -6.944$

See (Pe 66f).

---

* Two γ-rays with energies of 3.685 ± 0.003 and 3.855 ± 0.003 MeV are reported by (Be 69b).

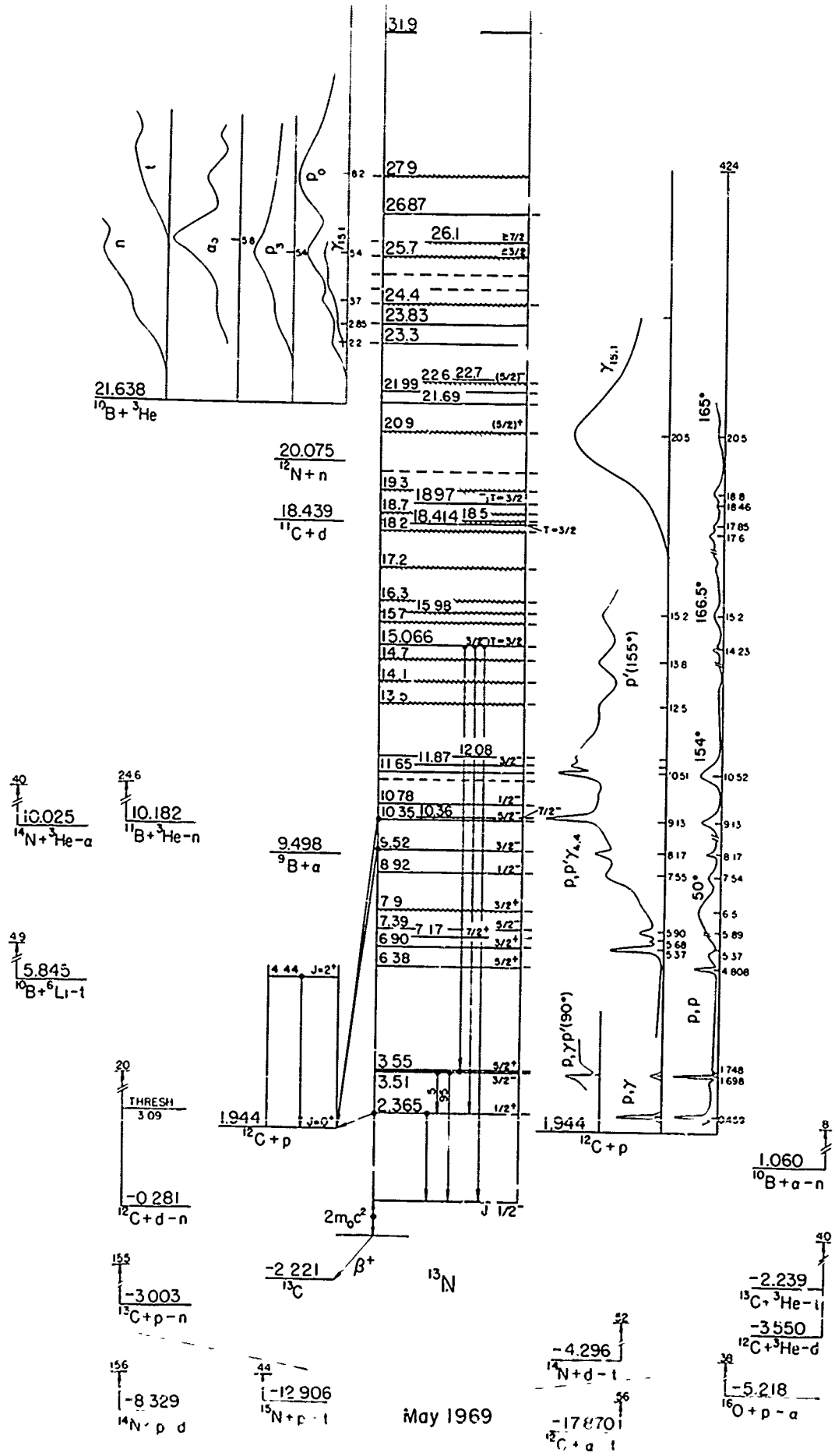
21.638
$^{10}B+^{3}He$
20.075
$^{12}N+n$
18.439
$^{11}C+d$
9.498
$^{9}B+\alpha$
10.025
$^{14}N+^{3}He-\alpha$
10.182
$^{11}B+^{3}He-n$
5.845
$^{10}B+^{6}Li-t$
THRESH
3.09
-0.281
$^{12}C+d-n$
-3.003
$^{13}C+p-n$
-8.329
$^{14}N+p-d$
-12.906
$^{15}N+p-t$
1.944
$^{12}C+p$
-2.221
^{13}C
$2m_0c^2$
β^+
^{13}N
May 1969
-4.296
$^{14}N+d-t$
-17.870
$^{12}C+\alpha-t$
1.060
$^{10}B+\alpha-n$
-2.239
$^{13}C+^{3}He-t$
-3.550
$^{12}C+^{3}He-d$
-5.218
$^{16}O+p-\alpha$
p,p
p,γ
p,p'γ4.4
p,γp'(90°)
p'(155°)
γ15.1
165°
166.5°
154°
50°

BLANK PAGE

^{13}N

General

Model calculations: (Am 64, Ba 59n, Ba 63h, Bo 63j, Bo 64o, Bo 65i, Br 67d, El 66b, Fa 67a, Fi 68, Go 68, Ha 66f, Ho 68, Hu 57d, Hu 67c, In 62, Ku 61a, Ku 61e, Ku 67j, La 55b, Ma 65o, Me 65b, Ne 61c, Ne 67b, No 66, Ph 60a, Po 67g, Se 63n, St 64, Ta 60l, Ta 62f, Tr 63, Wa 67i, We 65d).

Other: (Au 67a, Ep 67b, Ba 68y, Ba 68ll, Vo 68).

Ground State: μ = (-) 0.32212 ± 0.00035 n.m. (Be 64l; see also (Po 61a, Li 64h).)

1. $^{13}N(\beta^+)^{13}C$ $Q_m = 2.221$

Measured values of the half life are displayed in Table 13.20. The positon spectrum shows no deviation from the allowed shape; it is concluded that the Fierz coefficient in the Fermi interaction is < 11% (Da 58e, Da 57b, Da 68i). Log ft = 3.664 based on Q_m and $\tau_{1/2}$ = 9.961 min. The positon polarization has been studied by (Ha 57g, Bo 57h). The results indicate that the positons are completely polarized and hence that Fermi transitions as well as G-T transitions exhibit the maximum effect of parity non-conservation. See also (Aj 59) and (Ga 65h, Mi 66j, Am 67a).

Table 13.19. Energy Levels of ^{13}N

E_x in ^{13}N (MeV ± keV)	$J^{\pi};T$	Γ(keV) or $\tau_{1/2}$	Decay	Reactions
0	$1/2^-$	$\tau_{1/2}$ = 9.961 ± 0.005 min.	β^+	1,3,9,10,11,12,19,20,21,22,23,24,25,26, 27,28,29,30,31,32,33,34,35,36,37
2.3660±1.0	$1/2^+$	35±1 keV	γ,p	10,12,15,19,20,27,29,30,31
3.509±2	$3/2^-$	63±5	γ,p	10,12,15,19,20,21,22,23,26,27,29,30,31, 33,36
3.547±6	$5/2^+$	74	p	10,15,19,20,21,22,23,27,29,36
6.382±10	$5/2^+$	11	p	10,15,27,31,33,36
6.898±10	$3/2^+$	115±5	p	15,31
7.166±8	$7/2^+$	9±0.5	p	15,27,31
7.387±6	$5/2^-$	75±5	p	15,27,28,29,30,31,33,36
7.9	$3/2^+$	≈ 1500	p	15
8.92±30	$1/2^-$	230	p	15,27,29,30,33
9.52±20	$3/2^-$	30	p	11,15,27,30
10.35±20	$5/2^-$	30	p	11,15
10.36	$7/2^-$	76	p	15
10.78±40	$1/2^-$			27,33
(11.44)			p	15
11.65		80	p	15
11.87±30	$3/2^-$	130	p	15,27,29,30,33
12.08		140	p	15
13.5		≈ 500	p	15
14.1		≈ 500	p,(γ)	12,15
14.7		≈ 500	p	15
15.066±5	$3/2^-$;T=3/2	1.13±0.3	γ,p,α	11,12,15,18,27,33
15.7		≈ 500	p	15

Table 13.19 (concluded)

15.98±50		≈ 500	p	15,27
16.3		≈ 500	p	15
17.2		≈ 500	p	15
18.2		≈ 500	p	15
18.414±6	T=3/2	≈ 50	p	11,15
18.5		≈ 500	p	15
18.7		≈ 500	p	15
18.974	-;T=3/2	≤ 15	p	11,15
19.3		≈ 500	p	15
(19.8)		≈ 500	(γ,p)	12,15
20.9	$(5/2)^+$	≈ 1500	p	15
21.69			p	15
21.99			p	15
22.6	$(5/2)^-$	≈ 1000	p	15
22.7			γ	12
23.3		400	p,^{3}He	5
23.83		350±50	p,^{3}He	5
24.4		≈ 500	p,^{3}He	5,15
(24.8)		100	p,^{3}He	5
(25.2)	$(3/2)^-$	120	p,^{3}He	5,15
25.7	≥ 3/2	≈ 1000	p,^{3}He	5
26.1	≥ 7/2	≈ 1000	d,^{3}He,α	6,8
26.87			p	15
27.9		broad	p,^{3}He	5
31.9			p,γ	12

48

Table 13.20. The half life of ^{13}N [a]

$\tau_{1/2}$ (min.)	Reference
9.96 ± 0.03	(Ar 58)
9.96 ± 0.03	(Da 58e)
9.96 ± 0.005	(Ja 60j)
9.93 ± 0.05	(Ki 60)
9.96 ± 0.02	(Eb 65)
10.05 ± 0.05	(Bo 65a)
9.961 ± 0.005	Weighted average

[a] See also (Aj 55, Aj 59, Ra 61).

2. $^{7}Li(^{6}Li,2n)^{11}C$ $Q_m = 2.204$ $E_b = 23.651$

See (No 60b).

3. $^{9}Be(^{6}Li,2n)^{13}N$ $Q_m = 3.951$

See (No 57a).

4. $^{10}B(^{3}He,n)^{12}N$ $Q_m = 1.563$ $E_b = 21.638$

The cross section has been measured for $E(^{3}He) = 1$ to 6.3 MeV. There is some evidence of broad structures (Pe 63c). See also (Za 66) and ^{12}N.

5. $^{10}B(^{3}He,p)^{12}C$ $Q_m = 19.695$ $E_b = 21.638$

Observed resonances in the yields of proton groups and γ-rays for $E(^{3}He) = 1.2$ to 12 MeV are displayed in Table 13.21 (Sc 56f, Ku 64i, Pa 66g). For polarization measurements see (Si 65a, Si 67a) and (Mi 66l). See also ^{12}C.

6. $^{10}B(^{3}He,d)^{11}C$ $Q_m = 3.199$ $E_b = 21.638$

Excitation functions for the ground state group have been measured for $E(^{3}He) = 3.5$ to 10 MeV: a resonance is reported at $E(^{3}He) \approx 5.8$ MeV (Pa 65g). See also (Br 65i, Ha 67r). See also ^{11}C.

7. $^{10}B(^{3}He,t)^{10}C$ $Q_m = -3.624$ $E_b = 21.638$

The excitation function for ^{10}C production has been measured from threshold to $E(^{3}He) = 10.5$ MeV. σ_{max} (at 10.5 MeV) = 435 ± 87 μb. No detailed structure is observed (Os 64). See also (Ma 66h).

Table 13.21. Structure in $^{10}B + {}^{3}He$

(Sc 56f)		(Ku 64i)		(Pa 66g)	(. 65c)	Res in	E_x in $^{13}N^*$
E_{res} (MeV)	Γ (keV)	E_{res}	Γ	E_{res}	E_{res}		
2.0[a,b]	500			2.2		p_o, (p_1)	23.3
		2.85 ± 50	450 ± 50			$\gamma_{15.1}$	23.83
3.7[a]	700			3.5[a] 3.7		p_1, p_o	24.5
4.1	120					p_o	24.8
4.6[a]	150					p_o, (p_1)	25.2
		5.2 ± 100[c]	240 ± 80	5.4[d]		p_o, $\gamma_{15.1}$ p_2, p_3	25.7
					5.8[f]	α_o, d_o	26.1
				8.2[e]		p_o	27.9

[a] See, however, (Ku 64i).

[b] See also (Si 67a).

[c] See, however, (Ba 66p).

[d] $J \geq 3/2$, $\Gamma \approx 1$ MeV (Pa 66g).

[e] $J \geq 7/2$ (Pa 66g).

[f] $\Gamma \sim 1$ MeV. This resonance is also seen in the d_o excitation curve (Pa 65g).

8. $^{10}B(^3He,\alpha)^9B$ $Q_m = 12.140$ $E_b = 21.638$

The excitation function for α-particles to ^9B (0), measured for $E(^3He)$ = 2 to 10 MeV, indicates a strong resonance at $E(^3He)$ = 5.8 MeV ($^{13}N^*$ = 26.1), $\Gamma \simeq 1$ MeV. This resonance does not appear in the excitation function for alphas to $^9B^*$ (2.3) measured over the same energy range. Minor structure is observed in both excitation functions approximately every 2 MeV (Pa 65c). See also ^9B and (Ta 68j).

9. $^{10}B(\alpha,n)^{13}N$ $Q_m = 1.060$

See (Aj 59) and (He 59c, Ka 60g, Ro 61h, Ed 62, Ni 65a, Za 66).

10. $^{10}B(^6Li,t)^{13}N$ $Q_m = 5.845$

At $E(^6Li)$ = 4.9 MeV, triton groups are observed to ^{13}N (0, 2.4, 3.6 (unresolved), 6.38) (Mc 66a). See also (Ca 65e, Mo 63j).

11. $^{11}B(^3He,n)^{13}N$ $Q_m = 10.182$

Ground state angular distributions have been measured for $E(^3He)$ = 2.0 to 5.3 MeV (Di 66b). Work at $E(^3He)$ = 1.2 to 2.0 MeV has shown that previously reported states at E_x = 5.51 and 6.10 MeV in the $^{11}B(^3He,p)^{13}C$ reaction are instead due to the proton decay to ^{12}C (0) of ^{13}N states at E_x = 9.52 ± 0.02 and 10.35 ± 0.02 MeV (Ch 66j).

In a study with $E(^3He)$ = 7.0 to 13.5 MeV, neutron groups have been observed to T = 3/2 states at E_x = 15.068 ± 0.008 MeV (Γ < 15 keV),

18.44 ± 0.04 MeV and 18.98 ± 0.02 MeV (Γ = 40 ± 20 keV). J^{π} (determined by DWBA) for $^{13}N^{*}$ (15.07) is $3/2^{-}$. The ratio of the number of γ-rays from $^{13}N^{*}$ (15.07) to the number of protons from this level to ^{12}C (0), $\Gamma_{\gamma_o}/\Gamma_{p_o}$, has been determined to be 12 ± 2%: Γ is then calculated to be 1.13 ± 0.3 keV (Co 69). The isospin forbidden decay from the first T = 3/2 levels in ^{13}C and ^{13}N by neutron and proton emission, respectively, to $^{12}C^{*}$ (0, 4.44) is quite different: $\theta^2_{0.0}/\theta^2_{4.4}$ = 1.3 for ^{13}N and 0.2 for ^{13}C suggesting some admixture of charge-dependent forces (Ad 67d). This is illustrated also by the difference in the total widths of $^{13}N^{*}$ (15.07) and $^{13}C^{*}$ (15.112): Γ = 1.13 ± 0.3 keV and 4.7 ± 1.6 keV, respectively, (Co 69). See also (Br 64h, Ti 67).

12. (a) $^{12}C(p,\gamma)^{13}N$ $\qquad Q_m = 1.944$

(b) $^{12}C(p,\gamma p')^{12}C$

Resonances for capture radiation are displayed in Table 13.22. [See also Table 13.16 for a summary on the total radiation widths of the low lying levels of ^{13}C - ^{13}N.] No resonance is observed at E_p = 1.73 MeV, corresponding to $^{13}N^{*}$ (3.56) (Se 51e, Yo 63a).

No capture radiation is observed for E_x = 5 to 10.4 MeV: the upper limits to the (p,γ_o) cross sections are 2 mb/sr at the known (p,p) resonances (Pa 62). At E_p = 14.2 MeV, capture radiation from the first T = 3/2 state at E_x = 15.07 MeV is observed. $\Gamma_p\Gamma_\gamma/\Gamma$ =

5.5 ± 0.8 eV for the ground state transition which, combined with $\Gamma_p/\Gamma = 0.20 \pm 0.025$ from (Ad 67d), yields $\Gamma_\gamma = 27 \pm 5$ eV. The amplitude ratio of E2/M1 = -0.095 ± 0.07. For the transitions to $^{13}N^*$ (2.37) and $^{13}N^*$ (3.51 + 3.56), $\Gamma_\gamma < 4.5$ and 23 ± 5 eV, respectively. The angular distributions of the γ-rays determine $J^\pi = 3/2^-$ for $^{13}N^*$ (15.07) (Di 68a). No clear structure is observed in the ground state capture cross section for E_p = 14 to 19.5 MeV (Wa 62k). Resonances reported by (Fi 63b) in the yields of γ_0 and γ_2 are displayed in Table 13.22. See also (Ta 64d).

The capture cross section at low energy is of interest in connection with stellar energy generation: see (Aj 59) and (Ca 59, Ca 65, Ba 66ff). Fo67I

In the range E_p = 1.2 to 2.5 MeV, reaction (b) is observed, involving a γ-transition to the 2.37-MeV state. P-wave resonant capture at E_p = 1.70 MeV, with Γ_γ = 0.04 eV, interferes with direct p-wave capture (Wo 54). See also (Su 59, De 59a, Co 63d, Al 64r, Fa 65, Ma 65y, Ed 66a).

13. $^{12}C(p,n)^{12}N$ $\qquad Q_m = -18.131 \qquad E_b = 1.944$

The cross section for this reaction has been measured from threshold to E_p = 50 MeV: resonant structure is observed corresponding to E_x = 21, 24 and, possibly, ~ 27 MeV (Ri 68e). See also (Va 63h, Sp 66c) and ^{12}N.

Table 13.22. Resonances in $^{12}C(p,\gamma_o)^{13}N$

E_p (MeV ± keV)	Γ_{lab} (keV)	$\omega\Gamma_\gamma$ (eV)	$^{13}N^*$ (MeV)	Res. in Yield of	References
0.4568 ± 0.5	39.5 ± 1.0	0.67	2.365	γ_o	(Hu 53, Se 51e, Fo 49b)
	36.5 ± 2.0				(Bl 68a)
	36.7 ± 1.0	0.45 ± 0.05			(Ri 68h)
1.698 ± 5	72 ± 9	1.39	3.510	γ_o	(Va 49, Se 51e)
	67 ± 4	1.06[a]			(Yo 63a, Bl 68a)
13[b]			14	γ_o	(Fi 63b)
14.2	(see text)		15.0	γ_o, γ_1, $\gamma_2 + \gamma_3$	(Di 68a)
	T = 3/2 state				
20[b]			20	γ_o	(Fi 63b)
24.5			22.6	γ_2	(Fi 63b)
32.5[b]			31.9	γ_o	(Fi 63b)

[a] $\omega\Gamma_\gamma$ for $^{13}N^*$ (3.56) < 0.006 eV (Yo 63a).

[b] T = 1/2 dipole states (Fi 63b, Ta 64d).

14. $^{12}C(p,pn)^{11}C$ $Q_m = -18.720$ $E_b = 1.944$

Cross sections have been measured to $E_p = 385$ MeV: see (Au 62b, Cu 63, Ka 6[illegible] Me 66b, An 68b) and (Aj 59). See also (Va 63h).

15. (a) $^{12}C(p,p)^{12}C$ $E_b = 1.944$

(b) $^{12}C(p,p')^{12}C^*$

(c) $^{12}C(p,2p)^{11}B$ $Q_m = -15.957$

Yield curves for elastic protons, protons inelastically scattered to $^{12}C^*$ (4.4), and for γ-rays from $^{12}C^*$ (12.7) and (15.1) have been studied at many energies up to $E_p = 48.5$ MeV: see Table 13.23 for a display of the characteristics of the observed structure.

Total cross section measurements have been made at $E_p = 16.4$ (Po 65e), 16.2 to 28 (Ma 65r), 20 and 42 (Gi 64a), 24.5 to 46.1 (Mc 67j), 29 (Ma 64c), 34 (Go 59f), 45 (Ca 67e), 61 (Me 60b), 142 (Ta 61a), 180 MeV (Jo 61j) and 1 GeV (Ig 67a). Non-elastic cross sections have been measured at $E_p = 9.9$ and 10.2 MeV (Ig 62, Wi 63b) and at 77, 95, 113 and 133 MeV (Go 62). The (p,2p) cross section has been determined at $E_p = 120$ to 150 MeV (Au 62b) and that of the $^{12}C(p,p')3^4He$ at 90 MeV (Ga 61h). See also (Wa 62k, Be 67cc, Wa 67k).

A summary showing the energies at which polarization measurements have been made is presented as Table 13.24. Reviews of the experimental evidence are given by (Ph 59b, Ro 62f, Da 66k, Ro 66t, Ro 66w). See

Table 13.23. ^{13}N levels from $^{12}C(p,p)^{12}C$ and $^{12}C(p,p')^{12}C^*$

E_{res} (MeV ± keV)	$^{13}N^*$ (MeV)	Γ_{cm} (keV)	ℓ_p	J^π	θ_p^2	References
0.461 ± 3	2.370	31	0	$1/2^+$	0.54	(Ja 53b, Mi 54)
1.686 ± 6	3.502	63	1	$3/2^-$	0.031	(Ja 53b, Ar 66a)
1.734 ± 6	3.547	74	2	$5/2^+$	0.21	(Ja 53b, Ar 66a)
4.808 ± 10	6.382	11	2	$5/2^+$	0.0031	(Re 56c, Me 64b, Ba 67i)
5.370 ± 10	6.898	115 ± 5	2	$3/2^+$	0.13	A
5.65 ± 10	7.16	9 ± 0.5	4	$7/2^+$	0.016	(Ba 63g, Ba 63h, Ni 63b, Yo 60)
5.891	7.379	75 ± 5	3	$5/2^-$	0.069	B
6.5	7.9	≈ 1500	2	$3/2^+$	0.14	C
7.54	8.90	230	1	$1/2^-$	0.02	D
8.17	9.48	30	1	$3/2^-$	0.001	D and (Sw 66)
9.13[a]	10.36	30	3	$5/2^-$		E
9.13[a]	10.36	76	3	$7/2^-$		E
(10.31)	(11.44)					(Bo 60c, Mc 61b)
10.52	11.65	80				(Ad 61a, Na 61, Bo 60c, Mc 61b)
10.74	11.85	130				(Ad 61a)
10.99	12.08	140				(Ad 61a, Bo 60, Br 59b, Mc 61b)
12.5	13.5	≈ 500				(Na 61)
13.2	14.1	≈ 500				(Na 61)
13.8	14.7	≈ 500				(Na 61, Da 64a)
14.231 ± 6	15.065 ± 6	1.9 ± 0.6	1	$3/2^-$; T=3/2		F
14.9	15.7	≈ 500				(Da 64a)
15.2	16.0	≈ 500				(Na 61, Da 64a, Ku 67f)

Table 13.23 (continued)

15.6	16.3	≈ 500		(Da 64a)
16.5	17.2	≈ 500		(Da 64a)
17.6	18.2	≈ 500		(Da 64a, Ku 67f)
17.854 ± 6	18.414	≈ 50	T=3/2	(Ku 67f, Le 68)
17.9	18.5	≈ 500		(Da 64a)
18.2	18.7	≈ 500		(Da 64a)
18.461	18.974	$\lesssim$ 15	(-),T=3/2	(Ku 67f, Le 68)
18.8	19.3	≈ 500		(Da 64a)
(19.4)	(19.8)	≈ 500		(Da 64a)
20.5	20.9	≈ 1500	$(5/2)^+$	(Me 63c, Ma 65r, Lo 66l, Sc 67g)
21.41	21.69			(Di 63b, Wa 64e, Cr 66)
21.73	21.99			(Di 63b, Wa 64e, Cr 66)
22.4	22.6	≈ 1000	$(5/2)^-$	(Me 63c, Lo 66l, Sc 67g)
24.2	24.3	$\lesssim$ 500		(Me 63c, Lo 66l)
25.5	25.5		$(3/2)^-$	(Sc 67g)
27.02	26.87			(Di 63b, Wa 64e, Cr 66)

[a] The resonant energies probably do not differ by more than 2 keV (Be 68t).

A (Re 56c, Ad 61a, Sh 62c, Ba 63g, Ba 63h, Ni 63b, Me 64b, Ba 66bb, Ba 67i, Du 67b, Be 68t; see also Bo 60c, Be 65h).

B (Br 56d, Ad 61a, Sh 62c, Ba 63g, Ba 63h, Ni 63b, Me 64b, Ba 66bb, Sh 66j, Be 68t; see also Bo 60c).

C (Sc 56d, Bo 60c, Na 61, Sh 62c, Me 64b, Ba 66bb).

D (Ad 61a, Sh 62c, Ba 66bb; see also Bo 60c, Mc 61b).

E (Ad 61a, Sh 62c, Ba 66bb, Sw 66, Sw 67a, Be 68t; see also Bo 60c, Mc 61b, Na 61).

F (Br 66f, Br 66r, Ku 67f, Le 67b, Te 67, Te 68).

also (Aj 59).

The polarization and asymmetry in the elastic scattering of 32.9-MeV protons are equal to ± 2.5%: therefore no violation of time-reversal invariance is observed in that part of the nuclear force which flips the spin of proton (Gr 68h).

The following is a list of recent theoretical papers bearing on these reactions: (De 55a, Ba 59l, Ke 59a, Pu 59, Ri 59, Wi 59c, Ni 60, Sa 60g, Sa 60i, Sa 61b, Ma 62t, No 62, No 62b, No 62c, Ro 62a, Vo 62c, Ba 63h, Ho 63l, Lo 63a, Lu 63d, Ro 63e, Sc 63d, Cr 64d, Gr 64k, Iy 64, Ta 64a, Ve 64, Ba 65d, Be 65w, Cl 65c, Fa 65, Ha 65k, Pe 65c, Sa 65i, Ba 66f, Ba 67i, Sa 67e, Ta 67c, Wo 67c, Ba 68mm, Ch 68e, Ta 68g, Ti 68).

See also (Bu 59e, De 60a, Jo 61k, Pa 62, Az 63a, Fi 64c, Cl 65a, Gr 65d, Va 65, Ha 66r, Ma 66ff, Re 66b, Ar 67e, Vo 67c).

16. $^{12}C(p,d)^{11}C$ $Q_m = -16.495$ $E_b = 1.944$

The yield has been measured for E_p = 18 to 19.8 MeV: no structure is observed (Wa 62k). Polarization measurements are reported by (Co 60b, Ch 67j). See also ^{11}C in (Aj 68).

17. $^{12}C(p,t)^{10}C$ $Q_m = -23.319$ $E_b = 1.944$

See (Co 67i, Me 67i) and ^{10}C in (La 66).

18. $^{12}C(p,\alpha)^{9}B$ $Q_m = -7.554$ $E_b = 1.944$

Resonance behavior at $E_p \sim 14.2$ MeV corresponding to the first

Table 13.24. Summary[a] of $^{12}C(p,p)^{12}$ Polarization Measurements

E_p (MeV)	^{12}C States	References
1.2 → 2.4	g.s.	(Bo 65c)
1.5 → 3.0	g.s.	(Tr 67)
1.5 → 5.0	g.s.	(Ph 59b)
1.7 → 1.9	g.s.	(Ba 66zz)
2.3 → 4.3	g.s.	(Ev 60c)
2.4 → 3.4	g.s.	(Be 65c)
2.9	g.s.	(Hs 66)
3.0	g.s.	(Ne 62g)
3.8 → 4.8	g.s.	(Go 62d, Dr 64, Dr 64b, Dr 64c)
4.4 → 10	g.s.	(Te 68d, Be 68t)
4.5	g.s.	(Bo 64i)
4.6 → 5.5	g.s.	(Go 61p)
4.65 → 5.0	g.s.	(To 60)
4.6 → 7.2	g.s.	(Te 65)
4.7 → 11.3	g.s.	(Mo 65e)
5.0 → 10.5	g.s.	(Ev 61b)
5.1 → 6.8	g.s.	(Wa 59d)
5.4 → 19.7	g.s.	(Ro 62f)
6.0	g.s.	(Bo 65l)
6.0 → 6.8	g.s.	(Be 64d, Be 64q)
6.2	g.s.	(Cl 65b)
6.3	g.s.	(Ma 62u)

60

Table 13.24 (continued)

6.5	g.s.	(Be 62j)
6.7	g.s.	(Be 64g)
6.8	g.s.	(Pa 60a)
8.6	g.s.	(Ro 61f)
9.2	g.s.	(Ho 61b)
9.4	g.s.	(St 60b)
10.8, 12.7	g.s.	(Sa 63h)
11.7	g.s.	(Ro 61b)
12.8 → 13.4	g.s.	(St 66g)
14.5	g.s., 4.4	(St 62d, Ro 65m, Ro 621)
16.5	g.s., 4.4	(Da 66j)
16.6, 19.3	g.s., 4.4	(Bo 62a)
17.7	g.s., 4.4	(Br 59g)
17.8	g.s., 4.4	(Ba 65i)
19.3	9.6	(Bo 62a)
19.7	9.6	(Ro 62f)
20 → 28		(Lo 661)
20.2 → 28.3	g.s., 4.4	(Cr 66)
21	g.s.	(Be 66t)
29, 49	g.s., 4.4	(Cr 63a, Cr 66c)
32.9	g.s.	(Gr 68h)
38	g.s., 4.4	(Hw 63)
40	g.s., 4.4	(Bl 66d, Fr 67d)
43.5	g.s.	(Ca 66e)
50	g.s.	(Fa 67)

Table 13.24 (continued)

57	g.s.	(Ya 62b)
75, 152	g.s.	(Ro 66i)
80		(Ma 66qq)
139	g.s.	(He 63a)
140		(Ja 66c, Ja 66d, Ja 66f)
141		(Po 65d)
143		(St 64j)
145	g.s., 4.4, 9.6, 14, 18.5	(Em 66a)
150	g.s., 4.4, 7.7, 9.6	(Sa 62a, Ta 65c)
155	g.s., 4.4	(Al 57b)
173	g.s., 4.4, 9.6, 15.1	(Ty 57, Hi 57b)
424	g.s.	(He 57c)
725	g.s.	(Mc 65)
2,000; 3,600		(Ba 67ee)

---

[a] See also (Az 63, Az 65, Le 66c).

62

T = 3/2 state at 15.07 MeV has been reported for the α_o and α_1 groups (Le 67b, Le 68, Te 68). See also (Ba 64v, Ba 66bb, Va 63h, Re 66b) and ^9B in (La 66).

19. (a) $^{12}C(d,n)^{13}N$ $Q_m = -0.281$

(b) $^{12}C(d,pn)^{12}C$ $Q_m = -2.224$

Neutron groups have been observed corresponding to excited states of ^{13}N at 2.38 ± 0.05 and 3.53 ± 0.05 MeV (Mi 53). The angular distributions of n_o, n_1 and $n_2 + n_3$ at E_d = 9 MeV are consistent with ℓ_p = 1, 0 and 2. The dimensionless reduced widths of the ground and 3.5-MeV states are, respectively, 0.056 and 0.19 (Ca 57a; see also Mi 53). (Mc 58d) finds 0.09 ± 0.035 for the reduced width for ^{13}N (0). Angular distributions have also been measured at E_d = 1.5 to 3.0 MeV (El 59c; see also Ho 63i: n_o), 3.78 to 4.20 MeV (Fu 66; n_o) and at 13 MeV (Ko 63c). See also ^{14}N.

In the range E_d = 2.8 to 3.7 MeV, a single neutron threshold is observed at E_d = 3.09 ± 0.02 MeV, corresponding to $^{13}N^*$ = 2.36 (5) ± 0.02 MeV (Ma 55j).

At E_d = 4.7 to 5.5 MeV, broad proton groups are reported from the sequential decay $^{12}C + d \rightarrow {}^{14}N^* \rightarrow {}^{13}N^* + n \rightarrow {}^{12}C + n + p$ via $^{13}N^*$ (3.51, 3.56) (Pi 63a). The proximity scattering associated with this process is characterized by a mean lifetime for the intermediate state of 0.7×10^{-20} sec (La 66m, La 65b). See also (Bo 68e).

See also (Aj 59), (Ma 60e, Ke 61b, Le 61h, Yn 61, Ya 61a, Ca 64b, Ga 65b, Jo 65e, Si 65e, Ho 66i, Og 67) and (Ho 61i, Sm 63a, Tr 63a, Sh 64m, Ma 65q, St 66l).

20. $^{12}C(^{3}He,d)^{13}N$ $Q_m = -3.550$

Angular distributions of deuterons to ^{13}N (0) have been measured at $E(^{3}He)$ = 6.0, 8.8, 9.4 and 10.1 MeV (Hi 60b), at 13.9 MeV (Pr 60), at 21.6 and 24.7 MeV (We 60c) and at 29 MeV (Ga 62g). At the three highest energies, the angular distributions of the deuterons to ^{13}N (2.4) and (3.5-unresolved) have also been determined. See also (Fr 52e, Yn 61, Ec 66a, Ha 66n, Fo 67b, Ha 67s, Ho 67j).

21. $^{12}C(\alpha,t)^{13}N$ $Q_m = -17.870$

Angular distributions have been measured at E_α = 43 MeV (De 67d: t_o) and 56 MeV (Sy 67: t_o, t_{2+3}). See also (Yn 61, Tr 63a, Sh 64m).

22. $^{12}C(^{10}B,^{9}Be)^{13}N$ $Q_m = -4.644$

At $E(^{10}B)$ = 105 MeV, the ground state of ^{13}N and $^{13}N^*$ (3.5-unresolved) are observed (Sa 65d). See also (Gr 63h, Gr 65s).

23. $^{12}C(^{11}B, ^{10}Be)^{13}N$ $Q_m = -9.285$

At $E(^{11}B)$ = 116 MeV, the ground state of ^{13}N and $^{13}N^*$ (3.5-unresolved) are observed (Sa 65d, Po 67a). See also (Da 65f, Gr 65s).

24. $^{12}C(^{12}C,^{9}B)^{13}N$ $Q_m = -17.764$

See (Ch 62).

25. $^{12}C(^{14}N,^{13}C)^{13}N$ $Q_m = -5.606$

See (Bi 67).

26. $^{13}C(p,n)^{13}N$ $Q_m = -3.003$

$E_{thresh.} = 3.2353 \pm 0.0015$ (Be 61f)

$E_{thresh.} = 3.2371 \pm 0.0016$ (Be 61f: see Bo 64b)

$E_{thresh.} = 3.2354 \pm 0.0024$ (Bo 66k)

$E_{thresh.} = 3.2357 \pm 0.0007$ (recommended by Ma 66n)

Angular distributions of ground state neutrons have been measured at E_p = 3.1 to 5.3 MeV (Al 61e), 3.39 to 12.86 MeV (Da 61), 5.0 to 13.3 MeV (Wo 61) and 18.5 MeV (An 64a). See also (Pa 62, St 64d, Va 65) and (Bl 59b, El 63, Ca 64b, Sa 64i, Pa 66e).

Two thresholds are observed at E_p = 3.235 and 6.965 MeV ($\pm$ 10 keV), corresponding to ^{13}N (0) and $^{13}N^*$ (3.464) (Ri 66c). The neutron group corresponding to $^{13}N^*$ (2.3) is verv weak compared to the groups to ^{13}N (0) and $^{13}N^*$ (3.5) at the energies studied (Da 61). See also (Aj 59), (Un 66, At 68, Li 68h, Wo 68), and ^{14}N.

27. $^{13}C(^3He,t)^{13}N$ $Q_m = -2.239$

At $E(^3He)$ = 39.6 MeV, angular distributions have been obtained for the tritons corresponding to the ground state of ^{13}N and to the excited states at 2.37, 3.53 $\pm$ 0.03 (unresolved), 6.38, 7.17, 7.39, 8.92 $\pm$ 0.04, 11.85 $\pm$ 0.04 and 15.07 MeV. States at E_x = 9.5, 10.78 $\pm$ 0.04 and 15.98 $\pm$ 0.05 MeV were also populated, the first of these weakly (Ba 68kk). See also (Ec 66a, Ce 68).

28. $^{14}N(\gamma,n)^{13}N$ $Q_m = -10.553$

See (Fu 63a) and ^{14}N.

29. (a) $^{14}N(p,d)^{13}N$ $Q_m = -8.329$

(b) $^{14}N(p,pn)^{13}N$ $Q_m = -10.553$

Angular distributions have been determined at $E_p = 18.5$ MeV (Be 61d: d_o, d_1, d_{2+3}), 30.3 MeV (Ko 67j: d_o, d_2, and the deuterons to $^{13}N^*$ (7.38, 8.93, 11.80)), 45 MeV (Ma 66v: d_o, d_1, d_{2+3}, and the deuterons to $^{13}N^*$ (7.4 ± 0.1, 11.8 ± 0.2)) and 155.6 MeV (Ba 66gg: d_o, d_{2+3}, and the deuterons to $^{13}N^*$ (7.4, 9.0, 11.9)). See also (El 64, Og 67). For reaction (b) see (Ba 62o). See also ^{14}N.

30. $^{14}N(d,t)^{13}N$ $Q_m = -4.296$

Angular distributions of the tritons to $^{13}N^*$ (0, 3.51, 7.38, 8.93 + 9.48, 11.8) have been obtained at $E_d = 52$ MeV and analyzed by DWBA. The spectroscopic factors for the ^{13}N states [and the mirror states reached in the $^{14}N(d,^3He)^{13}C$ reaction] are in good agreement with theory and are additional evidence for the J^π assignments of $1/2^-$, $3/2^-$, $5/2^-$, $1/2^-$, $3/2^-$ and $3/2^-$ to these states (Hi 68c). Comparisons of (d,t) and (d,^{3}He) angular distributions are also reported by (De 66h, Ga 68h).

31. (a) $^{14}N(^3He,\alpha)^{13}N$ $Q_m = 10.025$

(b) $^{14}N(^3He,p\alpha)^{12}C$ $Q_m = 8.081$

$Q_o = 1.803 \pm 0.010$ (Yo 59a)

Alpha particle groups have been observed to the ground state of ^{13}N and to excited states at 2.358 ± 0.010, 3.471 ± 0.015 (Ta 60f), 6.38, 6.91, 7.166 ± 0.008 and 7.388 ± 0.008 MeV (Cl 62d). See also (Ga 63). Angular distributions have been studied at E(^{3}He) = 4.5, 5.5 and 7.0 MeV (Kn 67: α_o, α_1, α_{2+3}), 13.9 MeV (Lu 68: α_o, α_1, α_{2+3}, α_4, α_{6+7}), 17.4 to 36.6 MeV (Ar 65b: α_o, α_1, α_{2+3}, α_{5+6} and the alphas to $^{13}N^*$ (11.4)), 29 MeV (Se 62e: α_o) and at 40-45 MeV (Ba 67vv). For reaction (b) see (De 67c). See also (El 64, Bo 65i, Bo 66e, Be 67p, Og 67, Ze 68).

32. $^{14}N(^{14}N,^{15}N)^{13}N$ $\qquad Q_m = 0.282$

See (Ka 68a, Na 68a).

33. $^{15}N(p,t)^{13}N$ $\qquad Q_m = -12.906$

At E_p = 43.7 MeV, angular distributions have been obtained for the tritons corresponding to the ground state of ^{13}N and the excited states at 3.51 ($3/2^-$), 6.38 ± 0.03 ($5/2^+$), 7.38 ($5/2^-$), 8.93 ± 0.05 ($1/2^-$), 10.78 ± 0.06 ($1/2^-$), 11.88 ± 0.04 ($3/2^-$) and 15.07 ($3/2^-$; T = 3/2) MeV states [J^π values in parentheses, as determined by DWBA analyses using intermediate-coupling wave functions to obtain the two-nucleon structure factors] (Fl 68). Detailed comparisons have been made with the (p,^{3}He) reaction to the mirror states in ^{13}C (Fl 68, Fl 68a). See also (Ce 66, Ce 66f).

34. $^{16}O(\gamma,t)^{13}N$ $Q_m = -25.032$

See (Bu 65f, Bu 68).

35. (a) $^{16}O(p,\alpha)^{13}N$ $Q_m = -5.218$

(b) $^{16}O(p,p\alpha)^{12}C$ $Q_m = -7.161$

$Q_o = -5.206 \pm 0.010$ (Wh 60)

Angular distributions of the ground state alpha particles have been measured at E_p = 7.9 to 10.2 MeV (Da 64), 13.5 to 18.1 MeV (Ma 61g) and 38 MeV (Ga 68). See also (Va 62e, Ce 64), (Ch 57c, Wi 61e, Ho 64g) and ^{17}F. For reaction (b), see (Ch 67f).

36. $^{16}O(^3He,^6Li)^{13}N$ $Q_m = -9.239$

At $E(^3He)$ = 65.3 MeV, ^6Li groups are observed to $^{13}N^*$ (0, 3.6-unresolved, 6.4 and 7.4) (Ce 66).

37. $^{18}O(d,^7Li)^{13}N$ $Q_m = -7.899$

See (Da 66).

^{13}O

(Not Illustrated)

^{13}O has been produced in the reaction $^{16}O(^{3}He,^{6}He)^{13}O$ at $E(^{3}He)$ = 65 MeV; the mass excess of ^{13}O is 23.11 ± 0.07 MeV (Ce 66). ^{13}O is then bound with respect to ^{12}N + p by 1.54 MeV. A computation using the three other members of the T = 3/2 quartet predicts M-A (^{13}O) = 23.10 ± 0.05 (Ce 66).

^{13}O has also been reported in the $^{14}N(p,2n)^{13}O$ reaction initiated by 50 MeV protons: $\tau_{1/2}$ = 8.7 ± 0.4 msec. ^{13}O is a delayed proton emitter decaying via $^{13}N^{*}$ (8.90, 9.48) to (^{12}C + p). The relative intensities are 100:24; on this scale the intensity of possible transitions to ^{13}N (7.42; $5/2^{-}$) is < 15, log ft > 5.5 (Mc 65g).

See also (Go 60p, Ba 61f, Ba 63t, Vl 63, Go 64j, Ja 65c, Go 66j, Ke 66c).

AD61A ADAMS, FOX, HEYDEBURG AND FLETTER, PHYS. REV. 124 (1961) 1899
AD67D ADELBERGER, COCKE AND DAVIDS, BULL. AM. PHYS. SOC. 12 (1967) 1194
AJ52C AJZENBERG AND LAURITSEN, REVS. MOD. PHYS. 24 (1952) 321
AJ55 AJZENBERG AND LAURITSEN, REVS. MOD. PHYS. 27 (1955) 77
AJ59 AJZENBERG-SELOVE AND LAURITSEN, NUCLEAR PHYSICS 11 (1959) 1
AJ68 AJZENBERG-SELOVE AND LAURITSEN, NUCLEAR PHYSICS A114 (1968) 1
AL57B ALPHONCE, JOHANSSON AND TIBELL, NUCLEAR PHYSICS 3 (1957) 185
AL59A ALBURGER, ELWYN, GALLMANN, KANE, OFER AND PIXLEY, PHYS. REV. LETT. 2 (1959) 110
AL59B ALMQVIST ET AL., PHYS. REV. 114 (1959) 1040
AL60H ALEKSEEV ET AL, ZH. EKSP. TEOR. FIZ. 39 (1960) 1508, JETP (SOVIET PHYSICS 12 (1961) 1049
AL61E ALBERT, BLOOM AND GLENDENNING, PHYS. REV. 122 (1961) 862
AL62A ALBURGER AND WILKINSON, PRIVATE COMMUNICATION (1962)
AL63E AL-KITAL AND PECK, PHYS. REV. 130 (1963) 1500
AL64R ALLAS ET AL., PHYS. REV. LETT. 13 (1964) 628
AL65H ALMOND AND RISSER, NUCLEAR PHYSICS 72 (1965) 436
AL68 ALLEN, LAWSON AND WILKINSON, PHYS. LETT. 26B (1968) 138
AL68A AL'DZHAUAKHIRI, SPASSKII, TEPLOV AND FATEEVA, SOVIET J. NUCL. PHYS. 6 (1968) 180
AM59 AMADO, PHYS. REV. LETT. 2 (1959) 399
AM64 AMIT AND KATZ, NUCLEAR PHYSICS 58 (1964) 388
AM67A AMIET, EBENHOH AND HUGUENIN, HELV. PHYS. ACTA 40 (1967) 283
AN64A ANDERSON, HONG, MCCLURE AND WALKER, PHYS. REV. 136 (1964) B118
AN65C ANUFRIENKO ET AL, YADERNAYA FIZ. 2 (1965) 826
AN67 ANOTOLKOVIC, PAIC, RENDIC AND TOMAS, IZV. AKAD. NAUK SSSR (SER. FIZ.) 31 (1967) 110
AN68B ANDREWS ET AL, NUCLEAR PHYSICS A109 (1968) 689
AR58 ARNELL, DUBOIS AND ALHEN, NUCLEAR PHYSICS 6 (1958) 196
AR58A ARNBRUSTER, ANN. PHYSIQUE 3 (1958) 88
AR65B ARTENOV ET AL, YADERNAYA FIZ. 1 (1965) 1019
AR66A ARMSTRONG, BAGGETT, HARRIS AND LATORRE, PHYS. REV. 144 (1966) 823
AR67E ARMSTRONG, IN 'NUCLEAR RESEARCH WITH LOW ENERGY ACCELERATORS' ED. BY MARION AND VAN PATTER, ACADEMIC PRESS (1967), P. 247
AR68E ARTENOV, GOLDBERG, RUDAKOV AND SERIKOV, SOVIET J. NUCL. PHYS. 6 (1968) 9
AS58 ASHBY, CATRON, NEWKIRK AND TAYLOR, PHYS. REV. 111 (1958) 616
AS64B ASPELUND, 4B(1)/C271, PARIS (1964)
AS66B ASPELUND, PROC. SECOND INTERN. SYMP. ON POLARIZ. PHEN. OF NUCLEONS, KARLSRUHE (1965) P. 474 (BASEL, BIRKHAUSER VERLAG, 1966)
AS67B ASPELUND, AE 282 (1967)
AT68 ATKINSON AND MADSEN, PHYS. REV. LETT. 21 (1968) 295
AU62B AUSTIN, SALMON, CLEGG, FOLEY AND NEWTON, PROC. PHYS. SOC. 80 (1962) 303
AU67A AUDOUZE, EPHERRE AND REEVES, NUCLEAR PHYSICS A97 (1967) 144
AZ63 AZHGIREY ET AL, NUCLEAR PHYSICS 43 (1963) 213, AND DOKL. AKAD. NAUK 145 (1962) 1249
AZ63A AZHGIREY ET AL, ZH. EKSP. TEOR. FIZ. 44 (1963) 177, JETP (SOVIET PHYSICS) 17 (1963) 123
AZ65 AZHGIREI ET AL, YADERNAYA FIZ. 1 (1965) 122, AND SOVIET J. PHYS. 1 (1965) 84
BA53D BARTHOLOMEW AND KINSEY, CAN. J. PHYS. 31 (1953) 49
BA59L BALDIN AND NAN'KO, ZH. EKSP. TEOR. FIZ. 36 (1959) 1937, JETP (SOVIET PHYSICS) 9 (1959) 1377
BA59N BAZ, ADVANCES IN PHYS. 8 (1959) 349
BA60F BAIR, CORNI AND WILLARD, PHYS. REV. 119 (1960) 2026
BA60T BARLOUTAUD, FARAGGI, ROSCH AND SILVROTH, J. PHYS. RAD. 21 (1960) 369
BA61C BARROS, FORSYTH, JUPPE AND TAYLOR, PROC. PHYS. SOC. 77 (1961) 853

NOT REPRODUCIBLE

BA61F BAZ, GOLDANSKII AND ZELDOVICH, SOVIET PHYS. USPEKHI 3 (1961) 729
BA61L BARKER, NUCLEAR PHYSICS 28 (1961) 96
BA61N BALASHOV, NEUDACHIN AND SHIRNOV, IZV. AKAD. NAUK SSSR (SER. FIZ.) 25 (1961) 170, BULL. ACAD. SCI. USSR (PHYS.) 25 (1961) 165
BA62J BALASHOV AND BOYARKINA, IZV. AKAD. NAUK SSSR (SER. FIZ.) 26 (1962) 1196
BA62O BALASHOV AND BOYARKINA, NUCLEAR PHYSICS 38 (1962) 629, ZH. EKSP. TEOR. FIZ. 43 (1962) 117, JETP (SOVIET PHYSICS) 16 (1963) 84
BA62P BAIRD, J. CHEM. PHYS. 37 (1962) 1879
BA63G BARKER, SYMONS, TANNER AND TREACY, NUCLEAR PHYSICS 45 (1963) 449
BA63H BARKER, NUCLEAR PHYSICS 45 (1963) 467
BA63T BARTON ET AL, CAN. J. PHYS. 41 (1963) 2007
BA64V BAUER, ANDERSON AND HONG, NUCLEAR PHYSICS 56 (1964) 117
BA65D BARRETT, HILL AND HODGSON, NUCLEAR PHYSICS 62 (1965) 133
BA65I BAUGH, GREENLEES, LILLEY AND ROMAN, NUCLEAR PHYSICS 65 (1965) 33
BA65S BALASHOV, PAL AND FETISOV, PHYS. LETT. 17 (1965) 290
BA65AA BARZ, HEHL, RIEDEL AND SLOTTA, NUCLEAR PHYSICS 68 (1965) 231
BA66F BARNARD, DUVAL AND SHINT, PHYS. LETT. 20 (1966) 412
BA66P BARKER, PATTERSON, POATE AND TITTERTON, PHYS. LETT. 21 (1966) 318
BA66Q BALL AND CERNY, PHYS. LETT. 21 (1966) 551
BA66BB BARNARD, SHINT AND CLEGG, NUCLEAR PHYSICS 86 (1966) 130
BA66FF BARNES, 'SECOND SYMPOSIUM ON THE STRUCTURE OF LOW-MEDIUM MASS NUCLEI, APRIL 1966' P. 242
BA66GG BACHELIER ET AL, NUCLEAR PHYSICS 88 (1966) 307
BA66ZZ BASILE, DURAND AND TELLEZ, PROC. SECOND INTERN. SYMP. ON POLARIZ. PHEN. OF NUCLEONS, KARLSRUHE (1965) P. 487 (BASEL, BIRKHAUSER VERLAG, 1966)
BA66A8 BALDENEG ET AL, IN 'PROC. CONF. NUCL. REACTIONS, JAN. 1966, ROSSEN' DORF,' ED. BY J. SCHINTLMEISTER, ZFK'122 (1966) P. 161
BA66AF BALDENEG ET AL, IN 'PROC. CONF. NUCL. REACTIONS, JAN. 1966, ROSSENDORF,' EDITED BY J. SCHINTLMEISTER, ZFK-122 (1966), P. 228
BA67I BARNARD, PHYS. REV. 155 (1967) 1135
BA67EE BAYUKOV ET AL, YADERNAYA FIZ. 5 (1967) 337
BA67HH BANG, ZELENSKAYA, NAGZUNOV AND NEUDACHIN, SOVIET J. NUCL. PHYS. 4 (1967) 688
BA67JJ BARON AND ROUHANINEJAD, J. PHYSIQUE 28 (1967) 142
BA67VV BALL AND CERNY, BULL. AM. PHYS. SOC. 12 (1967) 1144
BA68P BASSEL AND DRISKO, 'PROC. SYMP. ON DIRECT REACTIONS WITH 3HE, IPCR, JAPAN, SEPT. 1967' (1968), P. 13
BA68Y BAHCALL, BAHCALL AND ULRICH
BA68KK BALL, UCRL-18263 (1968
BA68LL BAHCALL, BAHCALL AND SHAVIV, PHYS. REV. LETT. 20 (1968) 1209
BA68MM BASSEL AND WILKIN, PHYS. REV. 174 (1968) 1179
BE54 BENNETT, ROYS AND TOPPEL, PHYS. REV. 93 (1954) 924A
BE55A BENT, BONNER AND SIPPEL, PHYS. REV. 98 (1955) 1237
BE60G BENVENISTE, MITCHELL, SCHRADER AND ZENGER, NUCLEAR PHYSICS 19 (1960) 446
BE60H BELYAEV, ZAKHAR'EV AND NEUDACHIN, ATOMNAYA ENERGIYA 9 (1960) 298, SOVIET J. OF ATOMIC ENERGY 9 (1961) 833
BE61D BENNETT, PHYS. REV. 122 (1961) 595
BE61F BECKNER, BRAMBLETT, PHILLIPS AND EASTWOOD, PHYS. REV. 123 (1961) 2100
BE62J BEN, HABANEC, KARBAN AND NEMEC, CZECH. J. PHYS. 12 (1962) 660
BE62M BERKOWITZ ET AL, PHYS. REV. 128 (1962) 247
BE63E BEGHIAN, SUGIMOTO, WACHIER AND WEBER, NUCLEAR PHYSICS 42 (1963) 1
BE63I BESSIS, LEFEBVRE-BRION AND MOSER, REVS. MOD. PHYS. 35 (1963) 548
BE64D BEN ET AL, PHYS. LETT. 10 (1964) 114
BE64G BEN, HABANEC, KARBAN, NEMEC AND PRESPERIN, CZECH. J. PHYS. 14B (1964) 404
BE64L BERNSTEIN ET AL, PHYS. REV. 136 (1964) B27

NOT REPRODUCIBLE

BE64Q BEN ET AL, CZECH. J. PHYS. 14B (1964) 796
BE65A BERKOWITZ, CARLSON AND NORBECK, BULL. AM. PHYS. SOC. 10 (1965) 627
BE65C BERNSTEIN AND TERRELL, BULL. AM. PHYS. SOC. 10 (1965) 103
BE65H BEARSE ET AL, NUCLEAR PHYSICS 65 (1965) 545
BE65I BERTOZZI ET AL, NUCL. INSTR. METH. 33 (1965) 199
BE65U BERGDOLT, ANN. PHYS. 10 (1965) 051
BE66K BECK, ANN. PHYS. 1 (1966) 503
BE66T BERCAW, BOSCHITZ AND VINCENT, PROC. SECOND INTERN. SYMP. ON POLARIZ. PHEN. OF NUCLEONS, KARLSRUHE (1965) P. 334 (BASEL, BIRKHAUSER VERLAG, 1966)
BE67D BERLIJN ET AL, PHYS. REV. 153 (1967) 1152
BE67P BELOSHITSKY, PHYS. LETT. 24B (1967) 559
BE67CC BERNAS, GRADSZTAJN, REEVES AND SCHATZMAN, ANN. PHYS. 44 (1967) 426
BE67KK BECKER, BAHR, JAHR AND KUHLMANN, PROC. PROBLEM SYMP. ON NUCL. PHYS. (TBILISI, APRIL 1967), MOSCOW 1967, P. 442
BE68H BERTRAM AND TASSIE, PHYS. REV. 166 (1968) 1029
BE68K BETHGE, FOU AND ZURMUHLE, BULL. AM. PHYS. SOC. 13 (1968) 650
BE68T BERNSTEIN AND TERRELL, PHYS. REV. 173 (1968) 937
BE69B BERGQVIST, PRIVATE COMMUNICATION (1969)
BI55 BIGHAM, ALLEN AND ALMQVIST, PHYS. REV. 99 (1955) 631A
BI59 BILPUCH, WESTON, BOWMAN AND NEWSON, BULL. AM. PHYS. SOC. 4 (1959) 42
BI67 BIRNBAUM AND BROMLEY, IN WINTERN. NUCL. PHYS. CONF., GATLINBURG, 1966, ACADEMIC PRESS (1967) P. 157
BL59B BLOOM, GLENDENNING AND MOSZKOWSKI, PHYS. REV. LETT. 3 (1959) 98
BL66D BLUMBERG ET AL, PHYS. REV. 147 (1966) 812
BL68A BLATT ET AL, BULL. AM. PHYS. SOC. 13 (1968) 173
BO55D BONNER, KRAUS, MARION AND SCHIFFER, PHYS. REV. 102 (1955) 1348
BO57H BOEHM, NOVEY, BARNES AND STECH, PHYS. REV. 108 (1957) 1497
BO59D BOCKELMAN, NUCLEAR PHYSICS 13 (1959) 205
BO60C BORDELL ET AL, BULL. AM. PHYS. SOC. 5 (1960) 404
BO61A BOWEN ET AL, NUCLEAR PHYSICS 22 (1961) 640
BO62A BOSCHITZ, NUCLEAR PHYSICS 30 (1962) 468
BO63E BOUCHEZ, DUCLOS AND PERRIN, NUCLEAR PHYSICS 43 (1963) 620
BO63J BOYARKINA AND ROTTER, IZV. AKAD. NAUK SSSR (SER. FIZ.) 27 (1963) 907, AND BULL. ACAD. SCI. USSR 27 (1963) 893
BO64B BONDELID AND WHITING, PHYS. REV. 134 (1964) B591
BO64I BOCA, CENJA, ILIESCU AND MARTALOGU, NUCLEAR PHYSICS 55 (1964) 471
BO64O BOYARKINA, IZV. AKAD. NAUK SSSR (SER. FIZ.) 28 (1964) 337, BULL. ACAD. SCI. USSR 28 (1964) 255
BO65A BORHANN ET AL, NUCLEAR PHYSICS 63 (1965) 430
BO65C BONDOUX, ASFOUR, GONTCHAR AND MACHALI, NUCLEAR PHYSICS 65 (1965) 490
BO65E BOOMER AND MURPHY, NUCLEAR PHYSICS 64 (1965) 593
BO65I BOYARKINA AND CIOFI DEGLI ATTI, PHYS. LETT. 19 (1965) 38
BO65L BOCA, BORSARU, CENJA AND ILIESCU, REVUE DE PHYSICUE (RUMANIA) 10 (1965) 581
BO66E BOYARKINA AND CHIOFI, YADERNAYA FIZ. 3 (1966) 43
BO66K BONNER, RICKARDS, BERNARD AND PHILLIPS, NUCLEAR PHYSICS 86 (1966) 137
BO67P BORDEN AND RITTER, PHYS. REV. 159 (1967) 875
BO68E BOHNE ET AL, NUCLEAR PHYSICS A106 (1968) 442
BR52E BROLLEY, FOWLER AND SCHLACKS, PHYS. REV. 88 (1952) 618
BR56D BROWNE AND LAMARSH, PHYS. REV. 104 (1956) 1099
BR59B BRAID AND YNTEMA, BULL. AM. PHYS. SOC. 4 (1959) 17
BR59G BROCKMAN, CONGRES INT. DE PHYS. NUCLEAIRE (1958) P. 350, DUNOD, PARIS (1959)
BR59L BRILL' AND SUMIN, ATOMNAYA ENERGIYA 7 (1959) 377
BR59M BRINK AND KERMAN, NUCLEAR PHYSICS 12 (1959) 314

NOT REPRODUCIBLE

72

BR60B BRALEY AND COOK, PHYS. REV. 118 (1960) 608
BR61D BRILL', VLASOV, KALININ AND SOKOLOV, DOKL. AKAD. NAUK SSSR 136 (1961) 55 JETP (SOVIET PHYSICS) DOKLADY 6 (1961) 24
BR64H BRYANT, BEERY, FLYNN AND LELAND, NUCLEAR PHYSICS 53 (1964) 97
BR64K BREUER, Z. PHYS. 178 (1964) 268
BR65A BRADBERRY AND STEUER, BULL. AM. PHYS. SOC. 10 (1965) 261
BR65I BRILL, YADERNAYA FIZIKA 1 (1965) 55, SOVIET J. NUCLEAR PHYSICS 1 (1965) 37
BR66F BREDIN, HANSEN, TENNER AND VAN BREE, BULL. AM. PHYS. SOC. 11 (1966) 625
BR66R BREDIN, HANSEN, TENNER AND VAN BREE, F.S.U. ISOBARIC SPIN CONF. (1966) P. 472
BR66DD BRUNING ET AL, PROC. SECOND INTERN. SYMP. ON POLARIZ. PHEN. OF NUCLEONS, KARLSRUHE (1965) P. 146 (BASEL, BIRKHAUSER VERLAG, 1966)
BR67D BREIT, PROC. NAT. ACAD. SCI.
BU59D BUCHER, BEVERLY, COBB AND HEREFORD, PHYS. REV. 115 (1959) 961
BU59E BURGE, NUCLEAR PHYSICS 13 (1959) 511
BU60E BUCK AND SATCHLER, PROC. INT. CONF. ON NUCL. STRUCTURE, KINGSTON (1960)
BU65F BUTTLAR AND GOLDMANN, Z. F. PHYS. 187 (1965) 355
BU68 BUTTLAR, GOLDMANN, HUBER AND KRAMER
CA57A CALVERT, JAFFE AND MASLIN, PROC. PHYS. SOC. 704 (1957) 70
CA57E CARLSON, PHYS. REV. 107 (1957) 1094
CA59 CAMERON, BULL. AM. PHYS. SOC. 4 (1959) 247
CA62H CALBOREANU AND MINZATU, REV. PHYS. ACAD. REP. POPULAIRE ROUMAINE 7 (1962) 433
CA63D CARLSON AND NORBECK, PHYS. REV. 131 (1963) 1204
CA64A CARLSON, NORBECK AND HART, BULL. AM. PHYS. SOC. 9 (1964) 419
CA64B CARTER, BULL. AM. PHYS. SOC. 9 (1964) 419
CA65 CAUGHLAN, PRIVATE COMMUNICATION (1965)— Fo67I
CA65E CARLSON AND MCGRATH, PHYS. REV. LETT. 15 (1965) 173
CA66E CAHILL, RICHARDSON AND HADDOCK, PHYS. REV. 144 (1966) 932
CA67E CARLSON ET AL, BULL. AM. PHYS. SOC. 12 (1967) 403
CE64 CERNY AND PEHL, BULL. AM. PHYS. SOC. 9 (1964) 679, AND PRIVATE COMMUNICATION
CE66 CERNY ET AL, PHYS. LETT. 20 (1966) 35
CE66F CERNY, DETRAZ AND PEHL, PHYS. REV. 152 (1966) 950
CE68 CERNY AND BALL, BULL. AM. PHYS. SOC. 13 (1968) 632
CH57C CHLEBOWSKA, BULL. ACAD. POLON. SCI. 5 (1957) 883, PHYSICS ABSTRACTS 645 (1959)
CH60A CHASE, JOHNSON AND WARBURTON, PHYS. REV. 120 (1960) 2103
CH62 CHASMAN AND BROWLEY, BULL. AM. PHYS. SOC. 7 (1962) 36
CH63D CHATTERJEE, NUCLEAR PHYSICS 49 (1963) 685
CH64F CHRISTIANSEN, SOMMCEN, BUSSER AND MIEDERGALL, 48(II)/C25, PARIS (1964)
CH65B CHATTERJEE, NUCLEAR PHYSICS 65 (1965) 635
CH66J CHRISTENSEN AND COCKE, PHYS. LETT. 22 (1966) 503
CH67F CHAPMAN AND MACLEOD, NUCLEAR PHYSICS A94 (1967) 324
CH67J CHANT, FISHER AND SCOTT, NUCLEAR PHYSICS A99 (1967) 669
CH67L CHATTERJEE AND GHOSE, PHYS. REV. 161 (1967) 1181
CH68B CHASE, MC DONALD, TRUE AND WARBURTON
CH68E CHALMERS AND SAPERSTEIN, PHYS. REV. 168 (1968) 1145
CI61 CINDRO, SLAUS, TOMAS AND EMAN, NUCLEAR PHYSICS 22 (1961) 96
CI66A CINDRO, REVS. MOD. PHYS. 38 (1966) 391
CL61C CLEGG, FOLEY, SALMON AND SEGEL, PROC. PHYS. SOC. 78 (1961) 681
CL62D CLAYTON, PHYS. REV. 128 (1962) 2254
CL63A CLEMENT, PADUA (1963) P. 457
CL63C CLEGG, CERN 63-28 (1963)
CL64B CLARKE AND CROSS, NUCLEAR PHYSICS 53 (1964) 177

NOT REPRODUCIBLE

CL65 CLARK AND ZOLOTAVIN, BULL. AM. PHYS. SOC. 10 (1965) 9
CL65A CLEGG, BARNARD AND SMITH, BULL. AM. PHYS. SOC. 10 (1965) 156
CL65B CLEGG, BARNARD AND SMITH, BULL. AM. PHYS. SOC. 10 (1965) 526
CL65C CLEGG, NUCLEAR PHYSICS 66 (1965) 185
CL65D CLASS, PRICE AND RISSER, NUCLEAR PHYSICS 71 (1965) 433
CO56F COOK, PENFOLD AND TELEGDI, PHYS. REV. 104 (1956) 554
CO57B COOK, PHYS. REV. 106 (1957) 300
CO60B COOPER AND WILSON, NUCLEAR PHYSICS 15 (1960) 373
CO63D COHEN, MOYER, SHAW AND WADDELL, PHYS. REV. 130 (1963) 1505
CO65I COHEN AND KURATH, NUCLEAR PHYSICS 73 (1965) 1
CO66G COX, BULL. AM. PHYS. SOC. 11 (1966) 654
CO66K COUCH, MC INTYRE AND HIEBERT, PHYS. REV. 152 (1966) 883
CO67I COSPER, BRUNNADER, CERNY AND MC GRATH, PHYS. LETT. 25B (1967) 324
CO67H COHEN AND KURATH, NUCLEAR PHYSICS A101 (1967) 1
CO67R COWINS, ANN. REV. NUCL. SCI. 17 (1967) 33
CO68H COTTRELL, LISLE AND NEWTON, NUCLEAR PHYSICS A109 (1968) 280
CO69 COCKE, ADLOFF AND CHEVALLIER
CR63A CRAIG, DORE, GREENLEES, LILLEY AND ROME, PHYS. LETT. 3 (1963) 301
CR64D CRONIN AND PALMIERI, ANN. PHYS. 30 (1964) 32
CR66 CRAIG ET AL, NUCLEAR PHYSICS 79 (1966) 177
CR66C CRAIG ET AL, NUCLEAR PHYSICS 82 (1966) 403
CR67B CRAMMELL, SUELZLE, UNRHANE AND YEARIAN, NUCLEAR PHYSICS A103 (1967) 677
CU63 CUMMING, NUCLEAR PHYSICS 49 (1963) 417
DA57B DANIEL AND SCHMIDT-ROHR, Z. NATUR. 12A (1957) 750
DA58E DANIEL AND SCHMIDT-ROHR, NUCLEAR PHYSICS 7 (1958) 516, AND Z. NATUR. 12A (1958) 750
DA61 DAGLEY, HAEBERLI AND SALADIN, NUCLEAR PHYSICS 24 (1961) 353
DA63B DAVIS, BONNER, MORLEY AND BASS, NUCLEAR PHYSICS 48 (1963) 169
DA64 DANGLE, OPPLIGER AND HARDIE, PHYS. REV. 133 (1964) B647
DA64A DAEHNICK AND SHERR, PHYS. REV. 135 (1964) B934
DA65F DAR, PHYS. REV. 139 (1965) B1195
DA66 DAEHNICK AND DENES, BULL. AM. PHYS. SOC. 11 (1966) 30
DA66J DARRIULAT, FOWLER, DE SHINIARSKI AND THIRION, PROC. SECOND INTERN. SYMP. ON POLARIZ. PHEN. OF NUCLEONS, KARLSRUHE (1965) P. 342 (BASEL, BIRKHAUSER VERLAG, 1966)
DA66K DARDEN, PROC. SECOND INTERN. SYMP. ON POLARIZ. PHEN. OF NUCLEONS, KARLSRUHE (1965) P. 433 (BASEL, BIRKHAUSER VERLAG, 1966)
DA68 DAVIDS, NUCLEAR PHYSICS A110 (1968) 619
DA68I DANIEL, REVS. MOD. PHYS. 40 (1968) 659
DA68J DAVIS AND BARSCHALL, PHYS. LETT. 27B (1968) 636
DE55A DE TOLEDO AND WATANABE, AN. ACAD. BRASIL. CIENC. 27 (1955) 471, PHYSICS ABSTRACTS 644 (1959)
DE59A DEINEKO, UKR. FIZ. ZH. (USSR) 4 (1959) 52, PHYSICS ABSTRACTS 11009 (1961)
DE60A DEARNALEY AND WHITEHEAD, PROC. INT. CONF. ON NUCL. STRUCTURE, KINGSTON (1960)
DE64I DENISOV, KULIKOV AND KUL'CHITSKII, ZH. EKSP. TEOR. FIZ. 46 (1964) 1488, JETP (SOVIET PHYSICS) 19 (1964) 1007
DE65L DETENBECK, NUCLEAR PHYSICS 74 (1965) 184
DE65M DETENBECK, NUCLEAR PHYSICS 74 (1965) 199
DE65R DEGTYAREV, ATOMNAYA ENERGIYA 19 (1965) 456
DE66A DENES, DAEHNICK AND BRISKO, PHYS. REV. 143 (1966) 1097
DE66C DECONINCK AND HELLEPUTTE, ANN. SOC. SCI. BRUXELLES 80 (1966) 193
DE66H DETRAZ ET AL, PHYS. LETT. 22 (1966) 638
DE67 DENES AND DAEHNICK, PHYS. REV. 154 (1967) 928
DE67C DETENBECK AND MARTIN, BULL. AM. PHYS. SOC. 12 (1967) 52
DA68G Daniel Ap J. 151 775 1968

NOT REPRODUCIBLE

DE67D DEINHARD AND SIENSSEN, BULL. AM. PHYS. SOC. 12 (1967) 17
DE67I DE MARTINI, SOLTESZ AND DONOGHUE, BULL. AM. PHYS. SOC. 12 (1967) 500
DI59 DIETZSCH, KUCHNIR, PHILLIPS AND SALA, AN. ACAD. BRASIL. CIENC. 31 (1959)
DI63B DICKENS, HAMER AND MADDELL, PHYS. REV. 129 (1963) 743
DI65A DITTNER ET AL, BULL. AM. PHYS. SOC. 10 (1965) 122
DI66B DIN AND WEIL, NUCLEAR PHYSICS 86 (1966) 509
DI67B DIN, NAGARAJAN AND POLLARD, NUCLEAR PHYSICS A93 (1967) 190
DI68A DIETRICH, SUFFERT, NERO AND HANNA, PHYS. REV. 163 (1963) 1169
DO56C DOUGLAS ET AL, PHYS. REV. 104 (1956) 1059
DO65B DONOVAN, REVS. MOD. PHYS. 37 (1965) 501
DO66 DONOGHUE, DE MARTINI, SOLTESZ AND SUKIS, BULL. AM. PHYS. SOC. 11 (1966) 12
DR63A DRISKO, SATCHLER AND BASSEL, "THIRD CONF. ON REACTIONS BETWEEN COMPLEX NUCLEI" (1963), P. 85
DR64 DRIGO, MANDUCHI, MARDELLI, RUSSO'MANDUCHI AND ZANNONI, PHYS. REV. LETT. 12 (1964) 452
DR64B DRIGO ET AL., PHYS. REV. 136 (1964) B1662
DR64C DRIGO ET AL, NUCLEAR PHYSICS 60 (1964) 441
DR66E DRAGUNOV, MELIKOV AND TULINOV, YADERNAYA FIZ. 4 (1966) 314
DU60 DUBDELDAM, JONKER AND BOERSMA, NUCLEAR PHYSICS 15 (1960) 452
DU64C DUGGAN, DUNCAN AND WEBB, BULL. AM. PHYS. SOC. 9 (1964) 553
DU64D DUGGAN, MILLER, DUNCAN AND WEBB, BULL. AM. PHYS. SOC. 9 (1964) 574
DU67B DUVAL, BARNARD AND SWINT, NUCLEAR PHYSICS A93 (1967) 164
EA62 EASLEA, PHYS. LETT. 1 (1962) 163
EB65 EBREY AND GRAY, NUCLEAR PHYSICS 61 (1965) 479
EC66A ECCLES, LUTZ AND BOHN, BULL. AM. PHYS. SOC. 11 (1966) 735
ED60 EDGE, PHYS. REV. 119 (1960) 1643
ED62 EDGE, BULL. AM. PHYS. SOC. 7 (1962) 571
ED63B EDVI-ILLES, PROC. PHYS. SOC. 81 (1963) 856
ED66A EDGINGTON AND ROSE, NUCLEAR PHYSICS 89 (1966) 523
ED68A EDWARDS, NUCLEAR PHYSICS A107 (1968) 523
EL59C ELWYN, KANE, OFER AND WILKINSON, PHYS. REV. 116 (1959) 1490
EL60 EL NADI, PHYS. REV. 120 (1960) 1360
EL62 ELWYN AND LANE, NUCLEAR PHYSICS 31 (1962) 78
EL63 EL NADI, FAHMY AND ABOU-NADID, NUCLEAR PHYSICS 42 (1963) 511
EL63A ELTON, PADUA (1963) P. 1093
EL64 EL-NADI AND RIAD, NUCLEAR PHYSICS 50 (1964) 33
EL66 EL'BATANONI, EL'NADI AND VYSOTSKY, NUCLEAR PHYSICS 82 (1966) 407
EL66B EL'BATANONI AND KRESHIN, NUCLEAR PHYSICS 89 (1966) 577
EM66A EMMERSON ET AL, NUCLEAR PHYSICS 77 (1966) 305
EP67B EPHERRE AND GRADSZTAJN, J. PHYSIQUE 28 (1967) 745
EV60C EVANS AND GRACE, NUCLEAR PHYSICS 15 (1960) 646
EV61B EVANS, NUCLEAR PHYSICS 27 (1961) 41
EV63A EVANS, KUEHNER AND ALMQVIST, PHYS. REV. 131 (1963) 1632
FA65 FAESSLER, NUCLEAR PHYSICS 65 (1965) 329
FA66 FAYARD, LANOT, MASSOT AND LAFOUCRIERE, J. PHYSIQUE C1'132 (1966)
FA67A FAIRBAIRN, NUCLEAR PHYSICS A90 (1967) 135
FA68 FAIVRE, KRIVINE AND PAPIAU, NUCLEAR PHYSICS A108 (1968) 508
FE67D FESSENDEN AND PARSON, PHYS. REV. 158 (1967) 948
FI59 FISCHER AND FISCHER, PHYS. REV. 114 (1959) 533
FI63B FISHER, ET AL., NUCLEAR PHYSICS 45 (1963) 113
FI64C FISHER AND RIBNER, 3A(11)/C130, PARIS (1964)
FI65 FINTZ, ANN. PHYS. (PARIS) 10 (1965) 435
FI68 FISHER ET AL
FL62 FLETCHER, TILLEY AND WILLIAMSON, NUCLEAR PHYSICS 38 (1962) 18
FL68 FLEMING, CERNY, NAPLES AND GLENDENNING, PHYS. REV. 166 (1968) 1012

NOT REPRODUCIBLE

FL68A FLEMING, CERNY AND GLENDENNING, PHYS. REV. 165 (1968) 1153
FU49B FOWLER AND LAURITSEN, PHYS. REV. 76 (1949) 314
FO61B FOSSAN, WALTER, WILSON AND DARSCHALL, PHYS. REV. 123 (1961) 209
FO67C FOCHT, ZURMUHLE AND FOU, BULL. AM. PHYS. SOC. 12 (1967) 35
FR65B FRASCA, FINLAY, KOSHEL AND CASSOLA, BULL. AM. PHYS. SOC. 10 (1965) 1126
FO67B FORTUNE, GRAY, TROST AND FLETCHER, BULL. AM. PHYS. SOC. 12 (1967) 35
FO68 FORTUNE, BEARSE, YNTEMA AND ONNUMA, BULL. AM. PHYS. SOC. 13 (1968) 699
FR52E FREMLIN, PROC. PHYS. SOC. A65 (1952) 762
FR60B FRANCIS, GOLDMAN AND GUTH, PHYS. REV. 120 (1960) 2175
FR64C FRANCIS, GOLDMAN AND GUTH, CONGRES INTERN. DE PHYS. NUCL., PARIS (1964)
FR67D FRICKE, GROSS, HORTON AND ZUCKER, PHYS. REV. 156 (1967) 1207
FU59 FUJII, PROG. IN THEO. PHYS. 21 (1959) 511
FU59A FULBRIGHT, LASSEN AND POULSEN, KGL. DAN. VID. SELSK. MAT. FYS. MEDD. 31 NO. 10 (1959)
FU63A FUCHS, Z. PHYS. 171 (1963) 416
FU66 FULBRIGHT ET AL, UR'875'6 (1965), NUCLEAR PHYSICS (1966)
FU67I FUKUNAGA, NAKAMURA AND FUJIWARA, J. PHYS. SOC. JAPAN 23 (1967) 911
GA57 GALONSKY, HOAK, TRAUGHBERG AND JONES, BULL. AM. PHYS. SOC. 2 (1957) 51
GA59U GARG AND TORKI, CONGRES INT. DE PHYS. NUCLEAIRE, (1958) P. 410, DUNOD, PARIS (1959)
GA61H GARWIN, CHASTEL AND VIGNERON, COMPT. REND. 253 (1961) 257
GA62G GARCIA, KIRK, ENGLAND AND HODGSON, NUCLEAR PHYSICS 38 (1962) 372
GA63 GALLMANN, ALBURGER, WILKINSON AND HIBOU, PHYS. REV. 129 (1963) 1765
GA63G GARIN AND MARQUEZ, J. PHYSIQUE 24 (1963) 911
GA64C GARIN ET AL, J. PHYSIQUE 25 (1964) 768
GA65G GAEDKE, TOTH AND WILLIAMS, PHYS. REV. 140 (1965) B296
GA65H GAPONOV, YADERNAYA FIZ. 2 (1965) 1002
GA65I GARCIA, BOLTA, LOPEZ AND SENENT, AN. REAL SOC. ESPAN. FIZ. QUIM 61 (1965) 341
GA66A GAEDKE, TOTH AND WILLIAMS, PHYS. REV. 141 (1966) 996
GA66B GALLMANN, FINTZ AND HODGSON, NUCLEAR PHYSICS 82 (1966) 161
GA66C GARVEY AND KELSON, PHYS. REV. LETT. 16 (1966) 197
GA66J GALATI, BRANDENBERGER, DUTT AND WEIL, BULL. AM. PHYS. SOC. 11 (1966) 821
GA68 GAMBARINI ET AL
GA68B GAEDKE, TOTH AND WILLIAMS, BULL. AM. PHYS. SOC. 13 (1968) 83
GA68H GAILLARD ET AL, NUCLEAR PHYSICS A119 (1968) 161
GE63 GERKE, TILLEY, FLETCHER AND WILLIAMSON, BULL. AM. PHYS. SOC. 8 (1963) 302
GE66 GERKE, TILLEY, FLETCHER AND WILLIAMSON, NUCLEAR PHYSICS 75 (1966) 609
GI59 GIBBONS AND MACKLIN, PHYS. REV. 114 (1959) 571
GI61 GIBBS AND TOBOCMAN, PHYS. REV. 124 (1961) 1496
GI64A GILES AND BURGE, NUCLEAR PHYSICS 50 (1964) 327
GI65 GIBBONS AND MACKLIN, PHYS. REV. 137 (1965) B1508
GL63A GLASGOW AND FOSTER, BULL. AM. PHYS. SOC. 8 (1963) 321
GL63D GLENDENNING, ANN. REV. NUCL. SCI. 13 (1963) 191
GL66C GLOVER AND JONES, NUCLEAR PHYSICS 84 (1966) 673
GL66C GLOVER AND JONES, NUCLEAR PHYSICS 84 (1966) 673
GO59F GOODING, NUCLEAR PHYSICS 12 (1959) 241
GO60P GOLDANSKY, NUCLEAR PHYSICS 19 (1960) 482
GO61K GORODETZKY, GALLMANN, FINTZ AND BASSOMPIERRE, J. PHYS. RAD. 22 (1961) 573, 575
GO61M GOLDFARB, PROC. RUTHERFORD JUB. INTER. CONF. (1961) P. 479
GO61P GORODETZKY, ULLMAN, BERGDOLT AND GALLMANN, J. PHYS. RAD. 22 (1961) 570
GO61Q GORODETZKY, FRICK AND GALLMANN, J. PHYS. RAD. 22 (1961) 578
GO62 GOLOSKIE AND STRAUCH, NUCLEAR PHYSICS 29 (1962) 474
GO62D GORODETZKY, ULLMAN, BERGDOLT AND GALLMANN, NUCLEAR PHYSICS 38 (1962) 177
FO67I Fowler, Caughlan, Zimmerman Ann Rev Ay and Astr 5, 525 (1967)

76

NOT REPRODUCIBLE

GO62P GORSHKOV, ZYABKIN AND TSVETKOV, ATOMNAYA ENERG. 13 (1962) 65
GO63H GOLDBERG, MAY AND STEHN, BNL 400, SECOND EDITION, VOL. 1 (1963)
GO63L GORSHKOV AND TSVETKOV, ATOMNAYA ENERGYA 14 (1963) 550
GO64H GORLOV, LEBEDEVA AND MOROZOV, DOKL. AKAD. NAUK SSSR 158 (1964) 574
GO64J GOLDANSKII, SOVIET PHYSICS - DOKLADY - 9 (1965) 566, DOKL. AKAD. NAUK 157 (1964) 321
GO66A GORODETZKY, FREEMAN, GALLMANN AND HAAS, PHYS. REV. 149 (1966) 801
GO66E GORODETZKY, GALLMANN AND FINTZ, J. PHYSIQUE C1'91 (1966)
GO66F GORODETZKY ET AL, J. PHYSIQUE C1'112 (1966)
GO66G GORODETZKY, FREEMAN, GALLMANN AND HAAS, J. PHYSIQUE C1'116 (1966)
GO66J GOLDANSKII, ANN. REV. OF NUCLEAR SCIENCE 16 (1966) 1.
GO68 GOLDHAMMER, HILL AND NACHAMKIN
GO68I GOBBI, MATTER, PERRENOUD AND HARMIER, NUCLEAR PHYSICS A112 (1968) 537
GR58A GROSHEV, DEMIDOV, LUTSENKO AND PELEKHOV, ATLAS OF GAMMA-RAY SPECTRA (MOSCOW 1958)
GR62D GREGORY, SYMONS AND TREACY, PROC. PHYS. SOC. 80 (1962) 315
GR63H GREIDER, ''THIRD CONF. ON REACTIONS BETWEEN COMPLEX NUCLEI'' (1963), P. 148
GR64D GREENBERG, ROALSVIG AND HASLAM, CAN. J. PHYS. 42 (1964) 731
GR64J GREEN AND DOMAHUE, PHYS. REV. 135 (1964) B701
GR64K GRANCHA, ROMANOVSKY, TIMUSHEV AND KCHASANY, VEST. MOSK. UNIV. FIZ. ASTRON. 4 (1964) 87
GR65D GRADSZTAJN, YIOU, KLAPISCH AND BERNAS, PHYS. REV. LETT. 14 (1965) 436
GR65H GROCE AND SOMERBY, NATURE 206 (1965) 494
GR65S GREIDER, ANNUAL REVIEW OF NUCLEAR SCIENCE 15 (1965) 291
GR68H GROSS, MALANIFY, VAN DER MOUDE AND ZUCKER, PHYS. REV. LETT. 21 (1968) 1476
GU66D GUPTA AND SOOD, PHYS. REV. 152 (1966) 917
HA57G HANNA AND PRESTON, PHYS. REV. 108 (1957) 160
HA59B HAMBURGER, THESIS, U. OF PITTSBURGH (1959)
HA59C HASSLER, ZATZICK AND EUBANK, BULL. AM. PHYS. SOC. 4 (1959) 321
HA59E HADDAD AND PHILLIPS, BULL. AM. PHYS. SOC. 4 (1959) 358
HA59N HALL AND BONNER, NUCLEAR PHYSICS 14 (1959) 295
HA61E HAMBURGER, PHYS. REV. 123 (1961) 619
HA63E HAYWARD, REVS. MOD. PHYS. 35 (1963) 324
HA63N HAEBERLI, IN -FAST NEUTRON PHYSICS- P. 1379 (MARION AND FOWLER, EDS., INTERSCIENCE PUBLISHERS, INC. 1963)
HA64P HARLOW, ORNL 3615 (1964)
HA65K HAYBRON AND MC MANUS, PHYS. REV. 140 (1965) B638
HA65L HARLOW, ROBINSON AND KINSEY, NUCLEAR PHYSICS 67 (1965) 249
HA66F HALBERT, KIM AND KUO, PHYS. LETT. 20 (1966) 657
HA66I HARVEY ET AL, PHYS. REV. 146 (1966) 712
HA66N HAHN AND RICCI, BULL. AM. PHYS. SOC. 11 (1966) 724
HA66R HANNA, PROC. SECOND INTERN. SYMP. ON POLARIZ. PHEN. OF NUCLEONS, KARLSRUHE (1965) P. 230 (BASEL, BIRKHAUSER VERLAG, 1966)
HA67R HAHN AND RICCI, NUCLEAR PHYSICS A101 (1967) 353
HA67S HAHN, NUCLEAR PHYSICS A101 (1967) 545
HE57C HEIBERG, PHYS. REV. 106 (1957) 1271
HE59C HESS, ANN. OF PHYS. 6 (1959) 115
HE63A HEE AND THORNDIKE, PHYS. REV. 132 (1963) 744
HE65C HENKEL, BULL. AM. PHYS. SOC. 10 (1965) 601
HE65D HENSLEY AND BARNES, BULL. AM. PHYS. SOC. 10 (1965) 1194
HE66B HENSLEY AND BARNES, BULL. AM. PHYS. SOC. 11 (1966) 629
HE66D HERNDON AND TANG, PHYS. REV. 149 (1966) 735
HE67E HENLEY AND LACY, PHYS. REV. 160 (1967) 835
HI57B HILLMAN, JOHANSSON AND TYREN, NUCLEAR PHYSICS 4 (1957) 648

NOT REPRODUCIBLE

HI60B HINDS AND MIDDLETON, PROC. PHYS. SOC. A75 (1960) 745
HI68C HINTERBERGER ET AL, NUCLEAR PHYSICS A106 (1968) 161
HO57B HOLMGREN, WOLICKI AND JOHNSTON, BULL. AM. PHYS. SOC. 2 (1957) 181
HO59E HONDA AND NAGASAKI, PROC. PHYS. SOC. A74 (1959) 517
HO60B HODGSON, NUCLEAR PHYSICS 21 (1960) 21
HO61B HOARE, ROBBINS AND GREENLEES, PROC. PHYS. SOC. 77 (1961) 830
HO61I HONDA AND UI, PROG. THEO. PHYS. 25 (1961) 635
HO63I HODGSON, PROC. PHYS. SOC. 81 (1963) 977
HO63K HOLMGREN, CAMERON AND JOHNSTON, NUCLEAR PHYSICS 48 (1963) 1
HO63L HOOTON AND ASHCROFT, PROC. PHYS. SOC. 81 (1963) 193
HO63O HORTIG, WERNER AND GENTNER, ''THIRD CONF. ON REACTIONS BETWEEN COMPLEX NUCLEI'' (1963), P. 178
HO66G HONDA, KUDO, UI AND HORIE, PHYS. LETT. 10 (1964) 99
HO66I HODGSON, IN 'PROC. CONF. NUCL. REACTIONS, JAN. 1966, ROSSENDORF,' ED. BY J. SCHINTLMEISTER, ZFK'122 (1966) P. 71
HO67J HOFFSWELL, JANNIK, NOWEIR AND YAVIN, PHYS. REV. LETT. 19 (1967) 754
HO68 HORIE AND HSIEH
HS66 HSU, YANG AND LEE, CHINESE J. PHYS. 4 (1966) 49
HS67A HSU, HUANG AND CHANG, NUCLEAR PHYSICS A104 (1967) 677
HU49J HUDSPETH AND SWANN, PHYS. REV. 76 (1949) 1150
HU53 HUUS AND DAY, PHYS. REV. 91 (1953) 599
HU57D HUPER, Z. F. NATURF. 12A (1957) 295
HU59 HUNTING AND HALL, PHYS. REV. 115 (1959) 956
HU60 HUDDLESTON, LANE, LEE AND MOORING, PHYS. REV. 117 (1960) 1055
HU66 HUANG, BARROWS AND GABBARD, BULL. A-C PHOSC S-CC 1 '0166' 5 0
HU66E HUCK, WALTER AND COCHE, J. PHYSIQUE C1'88 (1966)
HU67C HUMBLET AND LEBON, NUCLEAR PHYSICS A96 (1967) 593
HW63 HWANG ET AL, PHYS. REV. 131 (1963) 2602
IG62 IGO AND WILKINS, PHYS. LETT. 2 (1962) 342
IG63 IGO AND WILKINS, PHYS. REV. 131 (1963) 1251
IG67A IGO ET AL, BULL. AM. PHYS. SOC. 12 (1967) 15
IN62 INGLIS, NUCLEAR PHYSICS 30 (1962) 1
IY62 IYENGAR AND PECK, PHYS. REV. 125 (1962) 1000
IY64 IYER AND SHAH, CURRENT SCIENCE 33 (1964) 643
IV67A IVASCU, DUMITRESCU AND SERNESCU, REV. ROUMAINE PHYS. 12 (1967) 279
JA53B JACKSON AND GALONSKY, PHYS. REV. 89 (1953) 370
JA56A JAMES, JONES AND WILKINSON, PHIL. MAG. 1 (1956) 949
JA60B JAFFE ET AL, PROC. PHYS. SOC. 76 (1960) 914
JA60J JACOB, PROC. INT. CONF. ON NUCL. STRUCTURE, KINGSTON (UNIVERSITY PRESS, TORONTO, 1960) P. 429
JA61M JAIDAR, LOPEZ, MAZARI AND DOMINGUEZ, REV. MEX. DE FISICA 10 (1961) 247
JA61N JARCZYK, LANG, MULLER AND WOLFLI, HELV. PHYS. ACTA 34 (1961) 483
JA65C JANECKE, NUCLEAR PHYSICS 61 (1965) 326
JA65K JACKSON, MANNSON AND THOMAS, PHYS. LETT. 17 (1965) 324
JA66C JARVIS, ROSE AND SCANLON, NUCLEAR PHYSICS 77 (1966) 161
JA66D JARVIS, ROSE AND TAYLOR, NUCLEAR PHYSICS 79 (1966) 275
JA66F JARVIS, NUCLEAR PHYSICS 79 (1966) 305
JE66A JESSEN, BORMANN, DREYER AND NEUERT, NUCLEAR DATA 1 (1965) 103
JO61J JOHANSSON, SVANBERG AND SUNDBERG, ARK. FYS. 19 (1961) 527
JO61K JOHANSSON, SVANBERG AND HODGSON, ARK. FYS. 19 (1961) 541
JO62C JOHNSON, NUCLEAR PHYSICS 35 (1962) 654
JO65E JOHNSON, LANGEVIN-JOLIOT AND ROUSSEL, J. DE PHYSIQUE 26 (1965) 161
KA58A KAVANAGH AND BARNES, PHYS. REV. 112 (1958) 503
KA60G KANE, PIXLEY AND WILKINSON, PHIL. MAG. 5 (1960) 365
KA62F KALBORYANU AND HYNZATU, RDP (RUMANIA) 7 (1962) 433; PHYS. ABS. 19037
KA63F KAMINSKY, ORLOV, MARCHENKO AND GREVNOV, NUCLEAR PHYSICS 48 (1963) 417

NOT REPRODUCIBLE

79

KA63H KARADENIZ AND LEMEILLE, J. PHYSIQUE 24 (1963) 915
KA64G KAVANAGH, LEE AND LINK, CAN. J. PHYS. 42 (1965) 1429
KA66B KATMAN, FLETCHER, TILLEY AND WILLIAMSON, NUCLEAR PHYSICS 80 (1966) 449
KA67E KABACHNIK AND GRISHANOVA, SOVIET J. NUCL. PHYS. 4 (1967) 583
KA68A KAMMURI AND YOSHIDA
KA68C KAKIGI ET AL
KE59A KERMAN, MCMANUS AND THALER, ANN. OF PHYS. 8 (1959) 551
KE61B KELLER, SCIENTIA (CHILE) 113 (1961) 31, PHYSICS ABSTRACTS 19520 (1962)
KE65C KELSEY, KOBAYASHI AND MAHAJAN, NUCLEAR PHYSICS 68 (1965) 413
KE66B KELLOGG AND ZURMUHLE, PHYS. REV. 152 (1966) 890
KE66C KELSON AND GARVEY, PHYS. LETT. 23 (1966) 689
KI60 KING, HASLAM AND PARSONS, CAN. J. PHYS. 38 (1960) 231
KI63 KIM AND SHRADER, PHYS. REV. 129 (1963) 1275
KI67A KIGLER, PHYS. REV. 155 (1967) 1110
KL66 KLYUCHAREV AND TITOV, BULL. ACAD. SCI. USSR (PHYS.) 30 (1966) 229
KO63C KOLONKO ET AL, ACTA PHYS. POLCH. 23 (1963) 225
KO64C KOSIEK, SCHLUPMANN, SIEBERT AND WENDLING, Z. PHYS. 179 (1964) 9
KO67J KOZUB, KULL AND KASHY, NUCLEAR PHYSICS A99 (1967) 540
KO67P KOPSCH AND CIERJACKS, NUCL. INSTR. METH. 54 (1967) 277
KO68E KOSHEL, MORRIS, ADAMS AND WESTIN, BULL. AM. PHYS. SOC. 13 (1968) 883
KR59A KRÖGER AND KERN, PHYS. REV. 113 (1959) 890
KU59D KUREPIN AND NEUDACHIN, ZH. EKSP. TEOR. FIZ. 36 (1959) 1725, JETP (SOVIET PHYSICS) 9 (1959) 1229
KU61A KURATH AND LAWSON, NUCLEAR PHYSICS 23 (1961) 5
KU61E KURATH, PHYS. REV. 124 (1961) 552
KU63L KUKHTEVICH ET AL., -SOVIET PROGRESS IN NEUTRON PHYSICS- CONSULTANTS BUREAU (1963) P. 205, PHYSICS ABSTRACTS 12240 (1964)
KU64I KUAN, ALMOND, DIN AND BONNER, NUCLEAR PHYSICS 60 (1964) 509
KU67F KUAN AND HANNA, PHYS. LETT. 24B (1967) 566
KU67J KURATH AND LAWSON, PHYS. REV. 161 (1967) 915
LA59B LANE, PROC. PHYS. SOC. A68 (1955) 197
LA58D LAURIEN, HANDBUCH DER PHYSIK 38-1 (1958) P. 120
LA61 LANE, LANGSDORF, MONAHAN AND ELWYN, ANN. OF PHYS. 12 (1961) 135
LA65B LANG ET AL, PHYS. LETT. 15 (1965) 248 AND HELV. PHYS. ACTA 38 (1965) 366
LA66 LAURITSEN AND AJZENBERG'SELOVE, NUCLEAR PHYSICS 78 (1966) 1
LA66H LANG ET AL, NUCLEAR PHYSICS 88 (1966) 576
LA66R LANGSFORD ET AL, 'ANTWERP 1965 NEUTRON CONFERENCE' P. 529, NORTH' HOLLAND (1966)
LA67Q LANE ET AL, BULL. AM. PHYS. SOC. 12 (1967) 1185
LE61G LEGG, THESIS, PRINCETON U. (1961) UNPUBLISHED
LE61H LEVINTOV AND TROSTIN, ZH. EKSP. TEOR. FIZ. 40 (1961) 1570, JETP (SOVIET PHYSICS) 13 (1961) 1102
LE63 LEGG, PHYS. REV. 129 (1963) 272
LE63I LEVKOVSKII, ZH. EKSP. TEOR. FIZ. 45 (1963) 305, JETP (SOVIET PHYSICS) 18 (1964) 213
LE66C LEBRE, U. OF LYON, REPORT NO. LYCEN 6610 (1966)
LE66D LEMMER, REPORTS ON PROGRESS IN PHYSICS 29 (1966) 131
LE67B LE VINE AND PARKER, BULL. AM. PHYS. SOC. 12 (1967) 51
LE67G LEE, GLNESS AND SIEMSSEN, BULL. AM. PHYS. SOC. 12 (1967) 1197
LE67K LEE, IN 'INTERN. NUCL. PHYS. CONF., GATLINBURG, 1966,' ACADEMIC PRESS (1967) P. 31
LE68 LE VINE AND PARKER, INTERN. CONF. ON NUCL. STRUCTURE, TOKYO (1967)
LE68J LEROUX ET AL, NUCLEAR PHYSICS A116 (1968) 196
LI64H LINDGREN, PERTURBED ANGULAR CORRELATIONS (AMSTERDAM, NORTH'HOLLAND PUBLISHING COMPANY, 1964) P. 379
LI64I LINDSKOG, SUNDSTROM AND SPARRMAN, PERTURBED ANGULAR CORRELATIONS

NOT REPRODUCIBLE

(AMSTERDAM, NORTH'HOLLAND PUBLISHING COMPANY, 1964) P. 411

LI65C LIETZ, TREVINO, BEHOF AND DARDEN, NUCLEAR PHYSICS 67 (1965) 193

LI66 LISTER AND SAYRES, PHYS. REV. 143 (1966) 745

LI68H LIU AND IVASH, BULL. AM. PHYS. SOC. 13 (1968) 1461

LO59 LOPEZ, ALDA, MAZARI AND ORTIZ, REV. MEX. DE FISICA 8 (1959) 17

LO61B LOPEZ AND ALMEN, BULL. AM. PHYS. SOC. 6 (1961) 342

LO61D LOPEZ, REV. MEX. DE FISICA 10 (1961) 283

LO61F LOPEZ AND ALMEN, REV. MEX. DE FISICA 10 (1961) 239

LO63A LONCKE, PHYS. LETT. 4 (1963) 284

LO66L LOWE AND WATSON, PHYS. LETT. 23 (1966) 261

LU60 LUBITZ, BULL. AM. PHYS. SOC. 5 (1960) 18

LU63D LUTZ AND MASON, NUCLEAR PHYSICS 45 (1963) 657

LU63E LUTZ, MASON AND KARVELIS, NUCLEAR PHYSICS 47 (1963) 521

LU66 LUCAS, OBER AND JOHNSON

MA51 MALM AND BUECHNER, PHYS. REV. 81 (1951) 519

MA55J MARION, BONNER AND COOK, PHYS. REV. 100 (1955) 847

MA56F MACKIN, MILLS AND THIMON, PHYS. REV. 102 (1956) 802, AND J. PHYS. RAD. 17 (1956) 551

MA59G MACGREGOR, CONGRES INTERN. DE PHYS. NUCL. (1958) P. 612, DUNOD, PARIS (1959)

MA60E MACEFIELD AND TOWLE, PROC. PHYS. SOC. 76 (1960) 56

MA61G MAXSON, PHYS. REV. 123 (1961) 1304

MA62D MARQUES, POLICARPO AND PHILLIPS, NUCLEAR PHYSICS 36 (1962) 45

MA62S MACLEOD AND REID, AERE-R 4131 (1962)

MA62U MARATALOGU, ILIESCU AND CENJA, STUD. CERCETARI FIZ. (RUMANIA) 8 (1962) 927, PHYSICS ABSTRACTS 22371 (1963)

MA62T MADDISON, AERE-R 4131 (1962

MA63C MACKLIN, GIBBONS AND INADA, PHYS. REV. 129 (1963) 2695

MA63G MARSH AND BILANIUK, PHYS. REV. 130 (1963) 2373

MA63S MATTHIES, NEUDACHIN AND SMIRNOV, IZV. AKAD. NAUK SSSR (SER. FIZ.) 27 (1963) 1273

MA64C MAKINO, WADDELL AND EISBERG, NUCLEAR PHYSICS 50 (1964) 145

MA64H MASSOT, EL-BAZ AND LAFOUCRIERE, 4B(II)/C115, PARIS (1964)

MA64GG MANERO, ARMITAGE, FREEMAN AND MONTAGUE, NUCLEAR PHYSICS 59 (1964) 503

MA64II MAZARI ET AL, PROC. OF THE SECOND INTERNATIONAL CONFERENCE ON NUCLIDIC MASSES, 1963 (SPRINGER'VERLAG, 1964)

MA65Q MARION, NUCLEAR PHYSICS 68 (1965) 463

MA66V MARK, STANDING AND WU, BULL. AM. PHYS. SOC. 11 (1966) 471

MA66QQ MARTY ET AL, PROC. SECOND INTERN. SYMP. ON POLARIZ. PHEN. OF NUCLEONS, KARLSRUHE (1965) P. 499 (BASEL, BIRKHAUSER VERLAG, 1966)

MA65K MANSOUR ET AL, NUCLEAR PHYSICS 65 (1965) 433

MA65O MAHAUX, NUCLEAR PHYSICS 67 (1965) 358

MA65R MAKINO, WADDELL AND EISBERG, NUCLEAR PHYSICS 68 (1965) 373

MA65Y MAHAUX, NUCLEAR PHYSICS 71 (1965) 241

MA66H MANGELSON, AJZENBERG'SELOVE, REED AND LU, NUCLEAR PHYSICS 88 (1966) 137

MA66N MARION, REVS. MOD. PHYS. 38 (1966) 660

MA66S MACFARLANE, NUCLEAR SPIN'PARITY ASSIGNMENTS, P. 411 (ED. BY GOVE, ACADEMIC PRESS, 1966)

MA66Z MASON AND SAMPLE, NUCLEAR PHYSICS 82 (1966) 635

MA66FF MANI, SADEGHI AND TARRATS, J. PHYSIQUE C1'130 (1966)

MA66SS MAO ET AL, CHINESE J. PHYS. 22 (1966) 349, AND ACTA PHYS. SINICA (CHINA) 22 (1966) 440

MA67E MATHUR, BUCHANAN AND MORGAN, BULL. AM. PHYS. SOC. 12 (1967) 107

MA67S MACK AND MERTENS, Z. F. NATURF. 22A (1967) 1640

MA68J MAXSON AND MURPHY, NUCLEAR PHYSICS A110 (1968) 555

MA68R MACK, Z. PHYS. 212 (1968) 365

NOT REPRODUCIBLE

80

MC55C MC GRUER, WARBURTON AND BENDER, PHYS. REV. 100 (1955) 235
MC58D MC ELLISTREM, PHYS. REV. 111 (1958) 596
MC61B MCKENNA AND SHUTE, AUSTRALIAN J. PHYS. 14 (1961) 432
MC63B MCCARTHY, PADUA (1963) P. 94
MC65 MCMANIGAL, EANDI, KAPLAN AND MOYER, PHYS. REV. 137 (1965) B620
MC65G MC PHERSON, ESTERLUND, POSKANZER AND REEDER, PHYS. REV. 140 (1965) B1513
MC66A MC GRATH, PHYS. REV. 145 (1966) 802
MC66F MC DICKEN AND JACK, NUCLEAR PHYSICS 88 (1966) 457
MC67J MC GILL ET AL, BULL. AM. PHYS. SOC. 12 (1967) 1144
ME60B MEYER, EISBERG AND CARLSON, PHYS. REV. 117 (1960) 1334
ME63C MEASDAY ET AL, NUCLEAR PHYSICS 45 (1963) 98
ME64B MERTZ AND NIKOLIC, BULL. AM. PHYS. SOC. 9 (1964) 628
ME65B MEASDAY, CLEGG AND FISHER, NUCLEAR PHYSICS 61 (1965) 269
ME66B MEASDAY, NUCLEAR PHYSICS 78 (1966) 476
ME66I MEASDAY AND PALMIERI, NUCLEAR PHYSICS 85 (1966) 129
ME67B MENNRATH, HUBERT, LECCIA AND THIBAUD, PHYS. LETT. 24B (1967) 285
ME67F METER, PURSER, MORGAN AND WALTER, BULL. AM. PHYS. SOC. 12 (1967) 500
ME67I MEKHEDOV, YADERNAYA FIZ. 5 (1967) 34
ME68G MERTENS, Z. PHYS. 212 (1968) 347
MI53 MIDDLETON, EL BEDEWI AND TAI, PROC. PHYS. SOC. A66 (1953) 95
MI53C MILLAR AND CAMERON, CAN. J. PHYS. 31 (1953) 723
MI54 MILNE, PHYS. REV. 93 (1954) 762
MI60G MIKHLIN AND STAVINSKII, ATOMN. EN. (USSR) 8 (1960) 141, SOVIET J. ATOMIC ENERGY 8 (1961) 127, REACTOR SCI. TECH. 16 (1962) 119
MI63B MILLER, MORRISON, GALE AND DEARNALEY, BULL. AM. PHYS. SOC. 8 (1963) 292
MI64E MIDDLETON AND PULLEN, NUCLEAR PHYSICS 51 (1964) 50
MI66 MILLER AND KAVANAGH, BULL. AM. PHYS. SOC. 11 (1966) 315
MI66D MILLER AND KAVANAGH, NUCLEAR PHYSICS 88 (1966) 492
MI66J MIGDAL, 'PROC. INTERN. SCHOOL ENRICO FERMI, COURSE 36,' P. 171, ED. BY C. BLOCH, ACADEMIC PRESS (1966)
MI67A MILLER AND BIGGERSTAFF, BULL. AM. PHYS. SOC. 12 (1967) 1143
MI68D MILJANIC, PAIC, ANTOLKOVIC AND TOMAS, NUCLEAR PHYSICS A106 (1968) 401
MI68E MIZERA AND GERHART, PHYS. REV. 170 (1968) 839
MO58E MOORE, MC GRUER AND HAMBURGER, PHYS. REV. LETT. 1 (1958) 29
MO58F MOAK, GALONSKY, TRAUGHBER AND JONES, PHYS. REV. 110 (1958) 1369
MO59E MORRISON AND CALEY, PHYS. REV. 116 (1959) 1583
MO60B MORITA ET AL, J. PHYS. SOC. JAPAN 15 (1960) 550
MO63 MORGAN, NELLIS, BENJAMIN AND ASHE, BULL. AM. PHYS. SOC. 8 (1963) 120
MO63J MORRISON, GALE, HUSSAIN AND MURRAY, ''THIRD CONF. ON REACTIONS BETWEEN COMPLEX NUCLEI'' (1963), P. 168
MO64J MORGAN, BULL. AM. PHYS. SOC. 9 (1964) 653
MO65E MOSS AND HAEBERLI, NUCLEAR PHYSICS 72 (1965) 417
MO66 MORA, PHYS. LETT. 20 (1966) 89
MO66F MOORING, MONAHAN AND HUDDLESTON, NUCLEAR PHYSICS 82 (1966) 16
MO67E MORINIGO, NUCLEAR PHYSICS A90 (1967) 113
MU60A MUTO, BARROS AND JAFFE, PROC. PHYS. SOC. 75 (1960) 929
NA61 NAGAHARA, J. PHYS. SOC. JAPAN 16 (1961) 133
NA64A NAGARAJAN, NUCLEAR PHYSICS 52 (1964) 381
NA68A NAKANURA
NE59 NEILSON, DAWSON AND JOHNSON, REVS. SCI. INSTR. 30 (1959) 963
NE60 NEUDACHIN, TEPLOV AND TULINOV, JETP (SOVIET PHYSICS) 10 (1960) 387
NE61C NEUDACHIN AND ORLIN, ZH. EKSP. TEOR. FIZ. 41 (1961) 874
NE62F NEFKENS, BULL. AM. PHYS. SOC. 7 (1962) 550
NE62G NEMILOV AND POGELONOSTSEV, ZH. EKSP. TEOR. FIZ. 43 (1962) 382, JETP (SOVIET PHYSICS) 10 (1963) 274
NE63D NEMETS, PASECHNIK AND PUCHEROV, ATOMN. EN. 14 (1963) 159

NOT REPRODUCIBLE

NE63E NEMETS, PASECHNIK AND PUCHEROV, NUCLEAR PHYSICS 45 (1963) 1
NE63H NEMILOV AND ROBEDONOSTSEV, ZH. EKSP. TEOR. FIZ. 45 (1963) 103, JETP (SOVIET PHYSICS) 18 (1964) 76
NE65 NEUDATCHIN AND SHIRNOV, NUCLEAR PHYSICS 66 (1965) 25
NE67B NEMIROVSKII, SOVIET J. NUCL. PHYS. 4 (1967) 334
NI60A NISHIMURA, PHYS. REV. 118 (1960) 1350
NI63B NIKOLIC, LIDOFSKY AND KRUSE, PHYS. REV. 132 (1963) 2212
NI65A NILSSON, SANA AND GYLDEN, ARKIV FYSIK 30 (1965) 505
NO57A NORBECK AND LITTLEJOHN, PHYS. REV. 108 (1957) 754
NO60B NORBECK, BULL. AM. PHYS. SOC. 5 (1960) 476
NO61 NORBECK, PHYS. REV. 121 (1961) 824
NO62 NOHOTO, PHYS. REV. 127 (1962) 1693
NO62B NODVIK, DUKE AND HELKANOFF, PHYS. REV. 125 (1962) 975
NO62C NOHOTO, NUCLEAR PHYSICS 30 (1962) 513
NO66 NOBLE, PUC'937'66'194 (1966)
OD67 O'DONNELL AND BROWNE, PHYS. REV. 158 (1967) 957
OG67 OGLOBLIN, PROC. PROBLEM SYMP. ON NUCL. PHYS. (TBILISI, APRIL 1967), MOSCOW 1967, P. 169
OL66B OLARIU, ACAD. REPUB. POP. ROMINE. INST. DE FIZ. ATOM. RPT. IS 25 (1966)
OS64 OSGOOD, PATTERSON AND TITTERTON, PHYS. LETT. 10 (1964) 75
OT62 OT-STAVROV AND POPOV, ZH. EKSP. TEOR. FIZ. 43 (1962) 385, JETP (SOVIET PHYSICS) 16 (1963) 276
PA60A PASECHNIK, PUCHEROV, ORLENKO AND PROKOPENKO, ZH. EKSP. TEOR. FIZ. 39, (1960) 915, JETP (SOVIET PHYSICS) 12 (1961) 634
PA62 PARKER AND SHUTE, AUSTRALIAN J. PHYS. 15 (1962) 443
PA65C PATTERSON, POATE AND TITTERTON, PROC. PHYS. SOC. 85 (1965) 1005
PA65G PATTERSON, POATE, TITTERTON AND ROBSON, PROC. PHYS. SOC. 86 (1965) 1297
PA66E PARK, BULL. AM. PHYS. SOC. 11 (1966) 627
PA66G PATTERSON, POATE AND TITTERTON, PROC. PHYS. SOC. 88 (1966) 641
PE60 PEREY AND LORRAIN, BULL. AM. PHYS. SOC. 5 (1960) 18
PE60F PETERSON, BRATENAHL AND STOERING, PHYS. REV. 120 (1960) 521
PE63A PEASLEE, PHYS. REV. 129 (1963) 800
PE63C PETERSON AND GLASS, PHYS. REV. 130 (1963) 292
PE63H PERKIN, NUCLEAR PHYSICS 60 (1964) 561
PE65C PERRAIN AND VINH MAU, PHYS. LETT. 14 (1965) 236
PE66D PEARSON AND COZ, NUCLEAR PHYSICS 82 (1966) 545
PE66F PEIRALIA, DI CAPORIACCO, MANDO AND PARRINI, NUOVO CIM. 44B (1966) 225
PE67G PETERSON, PHYS. LETT. 25B (1967) 549
PF67A PFEIFFER AND MADANSKY, PHYS. REV. 163 (1967) 999
PH60A PHILLIPS AND TOMBRELLO, NUCLEAR PHYSICS 19 (1960) 555
PH59B PHILLIPS AND MILLER, PHYS. REV. 115 (1959) 1268
PI60A PIXLEY, KANE AND WILKINSON, PHYS. REV. 120 (1960) 943
PI63 PISENT AND SARUIS, NUOVO CIM. 28 (1963) 600
PI63A PITTS, BROWSON, BELOTE AND PHILLIPS, NUCLEAR PHYSICS 48 (1963) 75
PI67A PISENT AND SARIUS, NUCLEAR PHYSICS A91 (1967) 561
PO61A POSNER, SNIDER, BERNSTEIN AND HAMILTON, PHYS. REV. LETT. 7 (1961) 173
PO65B POSKANZER, REEDER AND DOSTROVSKY, PHYS. REV. 138 (1965) B18
PO65D POULET ET AL, J. PHYSIQUE 26 (1965) 399
PO65E POLLOCK AND SCHRANK, PHYS. REV. 140 (1965) B575
PO67A POTH, OVERLEY AND BROMLEY, PHYS. REV. 164 (1967) 1295
PO67C POORE ET AL, NUCLEAR PHYSICS A92 (1967) 97
PO67G POLETTI, WARBURTON AND KUKATH, PHYS. REV. 155 (1967) 1096
PO68S POSKANZER ET AL, PHYS. LETT. 27B (1968) 414
PR59A PRUD'HOMME, OKHUYSEN AND MORGAN, BULL. AM. PHYS. SOC. 4 (1959) 103
PR60 PRIEST, TENDAM AND BLEULER, PHYS. REV. 119 (1960) 1295
PR66E PROSSER, 'SECOND SYMPOSIUM ON THE STRUCTURE OF LOW'MEDIUM MASS

NOT REPRODUCIBLE

82

NUCLEI, APRIL 1966' P. 38

PR67D PRESTLICH, COTE AND THOMAS, PHYS. REV. 161 (1967) 1080

PR68A PRIEST AND VINCENT, PHYS. REV. 167 (1968) 933

PU59 PUJARA AND GATHA, INDIAN J. PHYS. 33 (1959) 243

PU61 PULLEN, WILKINSON AND WHITEHEAD, PROC. RUTHERFORD JUB. INTER. CONF. (1961) P. 565

RA61 RAYBURN, PHYS. REV. 122 (1961) 168

RA65 RAYBURN AND MOLLAN, NUCLEAR PHYSICS 61 (1965) 381

RA68A RAPHAEL AND ROSEN, BULL. AM. PHYS. SOC. 13 (1968) 719

RE56C REICH, PHILLIPS AND RUSSELL, PHYS. REV. 104 (1956) 143

RE66B REEVES, J. PHYSIQUE C1'28 (1966)

RE67B REYNOLDS AND FRANCIS, BULL. AM. PHYS. SOC. 12 (1967) 516

RI57 RISSER, PRICE AND CLASS, PHYS. REV. 105 (1957) 1208

RI59 RILEY, NUCLEAR PHYSICS 13 (1959) 407

RI66C RICKARDS, BONNER AND PHILLIPS, NUCLEAR PHYSICS 86 (1966) 167

RI66F RIPKA AND ZAMICK, PHYS. LETT. 23 (1966) 347

RI67J RIPKA, IN 'INTERN. NUCL. PHYS. CONF., GATLINBURG, 1966,' ACADEMIC PRESS (1967) P. 833

RI68D RIEMER AND FISHER, NUCLEAR PHYSICS A108 (1968) 567

RI68E RIEMER AND FISHER, NUCLEAR PHYSICS A108 (1968) 561

RI68H RIESS, PAUL, THOMAS AND HANNA

RI68I RICHTER AND CHATTIN, PHYS. LETT. 27B (1968) 181

RO61A ROBSON, NUCLEAR PHYSICS 22 (1961) 34, NUCLEAR PHYSICS 22 (1961) 47

RO61B ROSEN, BROLLEY AND STEWART, PHYS. REV. 121 (1961) 1423

RO61F ROSEN, BROLLEY, GURSKY AND STEWART, PHYS. REV. 124 (1961) 199

RO61H ROY AND HANTON, CAN. J. PHYS. 39 (1961) 1528

RO62A ROBSON, NUCLEAR PHYSICS 30 (1962) 316

RO62B ROBSON, FAIRWEATHER AND MCDONALD, BULL. AM. PHYS. SOC. 7 (1962) 333

RO62F ROSEN, DARRIULAT, FARAGGI AND GARIN, NUCLEAR PHYSICS 33 (1962) 458

RO62L ROSEN AND LELAND, PHYS. REV. LETT. 8 (1962) 379

RO63E ROBSON AND TOUTENHOFFD, AUSTRALIAN J. PHYS. 16 (1963) 370

RO63J ROBSON AND WEIGOLD, NUCLEAR PHYSICS 46 (1963) 321

RO65M ROSEN, BERRY, GOLDHABER AND AUERBACH, ANN. OF PHYS. 34 (1965) 96

RO66I ROLLAND ET AL, NUCLEAR PHYSICS 80 (1966) 625

RO66T ROSEN, 'ANTWERP 1965 NEUTRON CONFERENCE' P. 379, NORTH'HOLLAND (1966)

RO66W ROSEN, PROC. SECOND INTERN. SYMP. ON POLARIZ. PHEN. OF NUCLEONS, KARLSRUHE (1965) P. 253 (BASEL, BIRKHAUSER VERLAG, 1966)

RO67 ROEDER, ANN. PHYS. 43 (1967) 382

RO68A ROBINSON, SHAIN AND RASMUSSEN, BULL. AM. PHYS. SOC. 13 (1968) 84

SA60G SAKAMOTO, PROG. THEO. PHYS. 23 (1960) 382

SA60I SAKAMOTO, PROG. THEO. PHYS. 23 (1960) 1205

SA60L SALMON, NUCLEAR PHYSICS 21 (1960) 15

SA61B SAKAMOTO, NUCLEAR PHYSICS 25 (1961) 687

SA62A SALMON, CLEGG, FOLEY, FISHER AND ROWE, PROC. PHYS. SOC. 79 (1962) 14

SA63H SAMADA ET AL, PADUA (1963) P. 657

SA63L SACHS, CHASMAN AND BROMLEY, ''THIRD CONF. ON REACTIONS BETWEEN COMPLEX NUCLEI'' (1963), P. 90

SA64B SAMERS, PURSER, MORGAN AND WALTER, BULL. AM. PHYS. SOC. 9 (1964) 445

SA64I SATCHLER, DRISKO AND BASSEL, PHYS. REV. 136 (1964) B637

SA65D SACHS, CHASMAN AND BROMLEY, PHYS. REV. 139 (1965) B92

SA65G SARGOOD AND PUTT, AUSTRALIAN J. PHYS. 18 (1965) 491

SA65I SAMADA, NUCLEAR PHYSICS 74 (1965) 289

SA67E SAMES AND STAIRS, CAN. J. PHYS. 45 (1967) 1487

SC56D SCHNEIDER, HELV. PHYS. ACTA. 29 (1956) 552

SC56F SCHIFFER, BONNER, DAVIS AND PROSSER, PHYS. REV. 104 (1956) 1064

SC63D SCHIFFER, PADUA (1963) P. 139

NOT REPRODUCIBLE

SC64B SCHWARTZ, HOLMGREN, CAMERON AND KINDSON, PHYS. REV. 134 (1964) B577
SC64L SCHMIDT-ROHR, STOCK AND TURNER, NUCLEAR PHYSICS 53 (1964) 77
SC66G SCHIFFER, LEE, HARINOV AND MAYER-BORICKE, PHYS. REV. 147 (1966) 829
SC67G SCOTT, FISHER AND CHANT, NUCLEAR PHYSICS A99 (1967) 177
SC67H SCIENTER, BULL. AM. PHYS. SOC. 12 (1967) 895
SC67L SCHIFFER, MORRISON, SIEMSSEN AND ZEIDMAN, PHYS. REV. 164 (1967) 1274
SE51E SEAGRAVE, PHYS. REV. 84 (1951) 1219
SE59 SELLSCHOP, PHYS. REV. LETT. 3 (1959) 346
SE60B SELLSCHOP AND MINGAY, PROC. INT. CONF. ON NUCL. STRUCTURE, KINGSTON (1960) P. 396
SE62E SEN GUPTA, ROYBLAT, HODGSON AND ENGLAND, NUCLEAR PHYSICS 38 (1962) 361
SE63B SEABORN, MITCHELL, FLETCHER AND DAVIS, PHYS. REV. 129 (1963) 2217
SE63D SEN, NUCLEAR PHYSICS 41 (1963) 435
SE63I SELLSCHOP AND MINGAY, PADUA (1963) P. 425
SE63J SELLSCHOP AND MINGAY, PADUA (1963) P. 545
SE63L SETH, BILPUCH AND NEWSON, NUCLEAR PHYSICS 47 (1963) 137
SE63M SEBE, PROG. THEOR. PHYS. 30 (1963) 290
SE66D SETH AND TABONY, ANN. OF PHYS. 40 (1966) 183
SH62C SHUTE, ROBSON, MCKENNA AND BERZTISS, NUCLEAR PHYSICS 37 (1962) 535
SH64K SHAPIRO, CONGRES INTERN. DE PHYS. NUCL., PARIS, 1964 (CRNS, PARIS, 1964) P. 313, VOL. I
SH66J SHUTE AND BAXTER, NUCLEAR PHYSICS 83 (1966) 460
SI59D SINGLETARY AND WOOD, PHYS. REV. 114 (1959) 1595
SI62A SIEBERT, PHYS. REV. 127 (1962) 2113
SI62B SIMPSON, CLARK AND LITHERLAND, CAN. J. PHYS. 40 (1962) 769
SI65 SIEMSSEN, COSACK AND FELST, NUCLEAR PHYSICS 69 (1965) 209
SI65A SIMONS AND DETENBECK, PHYS. REV. 137 (1965) B1471
SI65B SIEMSSEN, COSACK AND FELST, NUCLEAR PHYSICS 69 (1965) 227
SI67A SIMONS, PHYS. REV. 155 (1967) 1132
SI67E SICK, HUBER AND STAMMBACH, HELV. PHYS. ACTA 40 (1967) 800
SL62A SLOBODRIAN, PHYS. REV. 126 (1962) 1059
SL65 SLAGGIE, BULL. AM. PHYS. SOC. 10 (1965) 497
SM59A SMITH, ABRAMSON AND CHASE, BULL. AM. PHYS. SOC. 4 (1959) 286
SM63A SMITH AND IVASH, PHYS. REV. 131 (1963) 304
SM64A SMOTRYAEV AND TROSTIN, ZH. EKSP. TEOR. FIZ. 46 (1964) 1494, JETP (SOVIET PHYSICS) 19 (1964) 1012
SO65 SORRIAUX, COMPT. REND. 260 (1965) 3045
SP54E SPERDUTO, BUECHNER, DOCKELMAN AND BROWNE, PHYS. REV. 95 (1954) 1313
SP66C SPALDING, THOMAS, REAY AND THORNDIKE, PHYS. REV. 150 (1966) 806
SP69 SPILLING, GRUPPELAAR, DE VRIES AND SPITS, NUCLEAR PHYSICS A113 (1968) 395
ST51 STRAIT, VAN PATTER, SPERDUTO AND BUECHNER, PHYS. REV. 81 (1951) 747
ST54C STANLEY, PHIL. MAG. 45 (1954) 430
ST59 STEUER ET AL., CONG. INT. PHYS. NUCL. (1958) P. 545, DUNOD, PARIS (1959)
ST60B STRZALKOWSKI, BOKHARI, AL-JEBOORI AND HIRD, PROC. PHYS. SOC. A75 (1960) 502
ST61D STANOJEVIC, JURIC AND MARSICANIN, BULL. INST. N. SCIENCES "BORIS KIDRICH" 11 (MARCH 1961) 11
ST62D STEWART AND ROSEN, BULL. AM. PHYS. SOC. 7 (1962) 434
ST64 STOVALL, PHYS. REV. 133 (1964) B268
ST64D STROMBERG, WIEDLING AND HOLMQVIST, AE 139 (1964)
ST64G STEWART AND MARTIN, NUCLEAR PHYSICS 60 (1964) 349
ST64I STEIN, GOLDBERG, FOURNAND AND FIEDLER-CHASSAN, BNL 325, 2D ED., SUPPT. 2 (1964)
ST64J STEINBERG, PALMBRT AND CORMACK, NUCLEAR PHYSICS 56 (1964) 46
ST65A STROBEL, THESIS, UNIV. OF SOUTHERN CALIFORNIA (1965)

NOT REPRODUCIBLE

84

ST66G STEBEN AND BRUSSEL, PHYS. REV. 146 (1966) 780
ST66L STROBEL, NUCLEAR PHYSICS 86 (1966) 535
ST66Q STANOJEVIC AND BORELI, BULL. BORIS KIDRICH INST. NUCL. SCI. 17 (1966) 161
SU59 SUFFERT, ENDT AND HOOGENBOOM, PHYSICA 25 (1959) 659
SU61 SUFFERT, NAGNAC-VALETTE AND YOCCOZ, J. PHYS. RAD. 22 (1961) 565
SU63 SUFFERT, COSTA AND NAGNAC'VALETTE, PADUA (1963) P. 842
SU66 SUFFERT, NUCLEAR PHYSICS 75 (1966) 226
SW66 SWINT, BARNARD, CLEGG AND WEIL, NUCLEAR PHYSICS 86 (1966) 119
SW67A SWINT, DUVAL, BARNARD AND CLEGG, NUCLEAR PHYSICS A93 (1967) 177
SW68D SWANN AND RASMUSSEN, BULL. AM. PHYS. SOC. 13 (1968) 1387
SY67 SYNCHROCYCLOTRON GROUP, LYON UNIV. RPT. NO. LYCEN 6747 (1967)
TA53 TALBOTT AND HEYDENBURG, PHYS. REV. 90 (1953) 106
TA55B TANNER, PROC. PHYS. SOC. A68 (1955) 1195
TA60F TAYLOR ET AL, PROC. PHYS. SOC. A75 (1960) 772
TA60L TALMI AND UNNA, ANN. REVS. NUCLEAR SCIENCE, VOL. 10 (1960)
TA61A TAYLOR AND WOOD, NUCLEAR PHYSICS 25 (1961) 642
TA62F TALMI, "NUCLEAR SPECTROSCOPY," RACAH ED. ACADEMIC PRESS (1962)
TA63 TANIFUJI, NUCLEAR PHYSICS 40 (1963) 357
TA64A TAMURA AND TERASAWA, PHYS. LETT. 8 (1964) 41
TA64D TANNER, THOMAS AND EARLE, NUCLEAR PHYSICS 52 (1964) 29
TA65B TAYLOR, FLETCHER AND DAVIS, NUCLEAR PHYSICS 65 (1965) 318
TA65C TATISCHEFF ET AL, PHYS. LETT. 16 (1965) 202
TA67C TATISCHEFF, NUCLEAR PHYSICS A98 (1967) 384
TA68G TAMURA, PROC. INTERN. CONF. NUCL. STRUCTURE, TOKYO, JAPAN (1967), SUPPT. J. PHYS. SOC. JAPAN 24 (1968) 208
TA68J TAFFARA AND VANZANI, NUOVO CIM. 56B (1968) 156
TE63 TEPLOV, PADUA (1963) P. 1076
TE65 TERRELL ET AL, BULL. AM. PHYS. SOC. 10 (1965) 103
TE67 TENNER AND VAN BREE, IN 'INTERN. NUCL. PHYS. CONF., GATLINBURG, 1966,' ACADEMIC PRESS (1967) P. 820
TE68 TENNER, TEITELMAN, VAN BREE AND OGATA, PROC. INTERN. CONF. NUCL. STRUCTURE, TOKYO, JAPAN (1967), SUPPT. J. PHYS. SOC. JAPAN 24 (1968) 299
TE68D TERRELL, JAHNS, KOSTOFF AND BERNSTEIN, PHYS. REV. 173 (1968) 931
TH52 THOMAS AND LAURITSEN, PHYS. REV. 88 (1952) 969
TI64A TISINGER, KEATON AND OWEN, PHYS. REV. 135 (1964) B392
TI67 TIMASHEV, SOVIET J. NUCL. PHYS. 4 (1967) 192
TI67A TILLEY, IN 'NUCLEAR RESEARCH WITH LOW ENERGY ACCELERATORS' ED. BY MARION AND VAN PATTER, ACADEMIC PRESS (1967), P. 389
TI68 TINDLE, NUCLEAR PHYSICS A110 (1968) 193
TO60 TOMBRELLO, BARLOUTAUD AND PHILLIPS, PHYS. REV. 119 (1960) 761
TO60E TOMBRELLO AND PHILLIPS, NUCLEAR PHYSICS 20 (1960) 648
TR63 TRUE, PHYS. REV. 130 (1963) 1530
TR63A TRUHLIK, NUCLEAR PHYSICS 48 (1963) 329
TR67 TRACHSLIN AND BROWN, NUCLEAR PHYSICS A101 (1967) 273
TS60 TSUKADA AND FUSE, J. PHYS. SOC. JAPAN 15 (1960) 1994
TS65 TSENTER AND SILIN, ATOMNAYA ENERGIYA 19 (1965) 40
TY57 TYREN, HILLMAN AND JOHANSSON, NUCLEAR PHYSICS 3 (1957) 336
TY66 TYREN ET AL, NUCLEAR PHYSICS 79 (1966) 321
UN66 UNE, YAMAJI AND YOSHIDA, PROG. THEO. PHYS. 35 (1966) 1010
VA49 VAN PATTER, PHYS. REV. 76 (1949) 1264
VA51A VAN PATTER, BUECHNER AND SPERDUTO, PHYS. REV. 82 (1951) 248
VA62E VASILYEV, KONAPOV AND POPOVA, ZH. EKSP. TEOR. FIZ. 43 (1962) 787, JETP (SOVIET PHYSICS) 16 (1963) 521
VA63H VALENTIN, ALBOUY, COHEN AND GUSAKOW, PHYS. LETT. 7 (1963) 163
VA63I VAN DANTZIG AND KOERTS, NUCLEAR PHYSICS 48 (1963) 177

NOT REPRODUCIBLE

VA63K VAN DER ZWAN, PORTERFIELD AND RITTER, NUCL. INSTR. METH. (NETHERLANDS) 24 (1963) 329

VA64E VAN DANTZIG AND TOBOCHAN, PHYS. REV. 136 (1964) B1682

VA65 VALENTIN, NUCLEAR PHYSICS 62 (1965) 81

VE64 VENTER AND FRAHN, ANN. PHYS. 27 (1964) 385, 401

VE68 VERBINSKI, PEREY, DICKENS AND BURRUS, PHYS. REV. 170 (1968) 916

VL63 VLASOV, ATOMNAYA ENERGYIA 14 (1963) 45

VO57 VON HERRMANN AND PIEPER, PHYS. REV. 105 (1957) 1556

VO62C VOGT, REVS. MOD. PHYS. 34 (1962) 723

VO67C VON BRENTANO, PROC. PROBLEM SYMP. ON NUCL. PHYS. (TBILISI, APRIL 1967), MOSCOW 1967, P. 469

VO68 VOLKOV AND WILCZYNSKI

WA57 WARBURTON AND MC GRUER, PHYS. REV. 105 (1957) 639

WA59D WARNER AND ALFORD, PHYS. REV. 114 (1959) 1338

WA62K WARBURTON AND FUNSTON, PHYS. REV. 128 (1962) 1810

WA64E WADDELL, COLE AND HANER, BULL. AM. PHYS. SOC. 9 (1964) 553

WA67I WARBURTON, IN 'NUCLEAR RESEARCH WITH LOW ENERGY ACCELERATORS' ED. BY MARION AND VAN PATTER, ACADEMIC PRESS (1967), P. 43

WA67K WACHTER, BURRUS AND GIBSON, PHYS. REV. 161 (1967) 971

WE60A WEGNER AND HALL, PHYS. REV. 119 (1960) 1654

WE65 WENZEL AND STEUER, PHYS. REV. 137 (1965) B30

WE65D WEIDENMULLER, NUCLEAR PHYSICS 69 (1965) 113

WH60 WHITE AND BUECHNER, PHYS. REV. 118 (1960) 1331

WI59C WILSON, PHYS. REV. 114 (1959) 260

WI61A WILENZICK, MITCHELL, SETH AND LEWIS, PHYS. REV. 121 (1961) 1150

WI61E WILDENMUTH AND CAROVILLANO, NUCLEAR PHYSICS 28 (1961) 636

WI61H WILKINSON, WOLLAN AND KOEHLER, ANN. REV. NUCL. SCI. 11 (1961) 303

WI63B WILKINS AND IGO, PHYS. REV. 129 (1963) 2198

WI65C WILENZICK, SETH, BEVINGTON AND LEWIS, NUCLEAR PHYSICS 62 (1965) 511

WI65K WILLIAMSON, NUCLEAR PHYSICS 69 (1965) 461

WI66E WILKINSON AND HAFETHE, NUCLEAR PHYSICS 85 (1966) 97

WI68B WILKINSON, PROC. INTERN. CONF. NUCL. STRUCTURE, TOKYO, JAPAN (1967), SUPPT. J. PHYS. SOC. JAPAN [illegible] (1968) 469

WO54 WOODBURY, TOLLESTRUP AND [illegible], PHYS. REV. 93 (1954) 1311

WO61 WONG, ANDERSON, BLOOM, MCCLURE AND WALKER, PHYS. REV. 123 (1961) 598

WO62A WONG, ANDERSON, MCCLURE AND WALKER, PHYS. REV. 128 (1962) 2339

WO67C WONG AND TAMURA, BULL. AM. PHYS. SOC. 12 (1967) 501

WO68 WONG ET AL

WY67A WYBORNY AND CARLSON, BULL. AM. PHYS. SOC. 12 (1967) 1177

YA61 YAMAGUCHI, J. PHYS. SOC. JAPAN 16 (1961) 583

YA61A YARAMIS, PHYS. REV. 124 (1961) 836

YA62B YAMABE ET AL, J. PHYS. SOC. JAPAN 17 (1962) 729

YA63A YAMAZAKI, KONDO AND YAMABE, J. PHYS. SOC. JAPAN 18 (1963) 620

YH61 YNTEMA, PROC. RUTHERFORD JUB. INTER. CONF. (1961) P. 513

YO59A YOUNG, PHILLIPS, SPENCER AND RAO, PHYS. REV. 116 (1959) 962

YO60 YOSHIKI AND NIKOLIC, BULL. AM. PHYS. SOC. 5 (1960) 46

YO63A YOUNG, ARMSTRONG AND HARION, NUCLEAR PHYSICS 44 (1963) 486

YU68A YULE AND HABERLI, NUCLEAR PHYSICS A117 (1968) 1

ZA60 ZAIKA, HENETS AND TSERINEO, ZH. EKSP. TEOR. FIZ. 39 (1960) 3, JETP (SOVIET PHYSICS) 12 (1961) 1, IZV. AKAD. NAUK SSSR (SER. FIZ.) 24 (1960) 862, AND BULL. ACAD. SCI. (PHYS.) 24 (1960) 865

ZA63 ZATZICK AND HAXSCH[illegible] PHYS. REV. 129 (1963) 172[illegible]

ZA64D ZAIKA, HENETS AND TOKAREVSKII, IZV. AKAD. NAUK SSSR (SER. FIZ.) 28 (1964) 1637

ZA66 ZAFIRATOS, AJZENBERG'SELOVE AND DIETRICH, NUCLEAR PHYSICS 77 (1966) 61 AND NUCLEAR PHYSICS 89 (1966) 706

NOT REPRODUCIBLE

ZE60 ZEL'DOVICH, ZH. EKSP. TEOR. FIZ. 38 (1960) 278, JETP (SOVIET PHYSICS) 11 (1960) 202
ZE68 ZELENSKAYA ET AL, SOVIET J. NUCL. PHYS. 6 (1968) 47
ZH62 ZHEREBTSOVA, LITVIN AND NEMILOV, ZH. EKSP. TEOR. FIZ. 43 (1962) 8, JETP (SOVIET PHYSICS) 16 (1963) 5
ZI65 ZIMANYI, MAGYAR FIZ. FOLYOIRAT 13 (1965) 461, AND PHYSICS ABSTRACTS 10804 (1966)
ZO67 ZOMBECK ET AL, BULL. AM. PHYS. SOC. 12 (1967) 500